MIC2505/2506

Single 2A / Dual 1A / High-Side Switches

General Description

The MIC2505, MIC2505-1, MIC2505-2, and MIC2506 are single and dual integrated high-side power switches that consist of TTL compatible control/enable inputs, a charge pump, and protected N-channel MOSFETs. The MIC2505/6 family can be used instead of separate high-side drivers and MOSFETs in many low-voltage applications.

The MIC2505/6 family controls voltages ranging from 2.7V to 7.5V. The MIC2505-series can deliver at least 2A continuous current while the MIC2506 can deliver at least 1A continuous current from each output. A slow turn-on feature prevents high inrush current when switching capacitive loads. The internal control circuitry is powered from the same 2.7V to 7.5V. Within the device's input range, outputs can be forced higher than the input voltage when disabled.

Multipurpose open-drain fault flag outputs indicate overcurrent limiting, open-load detection (except MIC2505-1 and -2 versions), thermal shutdown, or undervoltage lockout for each channel.

Overcurrent limiting is internally fixed and requires no external components.

Open-load detection is active when the switch is off. When off, a normal load pulls the output pin low. If the load is open, an optional, external, high-value resistor pulls the output pin high, triggering the fault flag. MIC2505-1 and -2 versions are tailored to Universal Serial Bus (USB) applications and do not include open-load detection.

Thermal shutdown turns off the output if the die temperature exceeds approximately 135°C. If enabled, the switch automatically restarts when the temperature falls 10°C.

Undervoltage lockout (UVLO) shuts off the output if the supply drops below 2.3V typical and reenables the output when the supply exceeds 2.5V typical.

Features

- Low MOSFET on resistance to 2.7V
  - 30mΩ typical at 5V (MIC2505-series)
  - 35mΩ typical at 3.3V (MIC2505-series)
  - 75mΩ typical at 5V (each MIC2506 output)
  - 80mΩ typical at 3.3V (each MIC2506 output)
- 2.7V to 7.5V input
- 110µA typical on-state supply current
- 1µA typical off-state supply current
- Output can be forced higher than input (off-state)
- Current limit
- Thermal shutdown
- 2.5V undervoltage lockout (UVLO)
- Open-load detection
  (MIC2505BN/M and MIC2506BN/M only)
- Open-drain fault flag
- 5ms (slow) turn-on and fast turnoff
- Logic-level control/enable input

Applications

- USB Power Distribution
- 3.3V and 5V power management
- PC Card card inrush limiting switch
- Hot plug-in power supplies
- Battery-charger circuits

Typical Applications

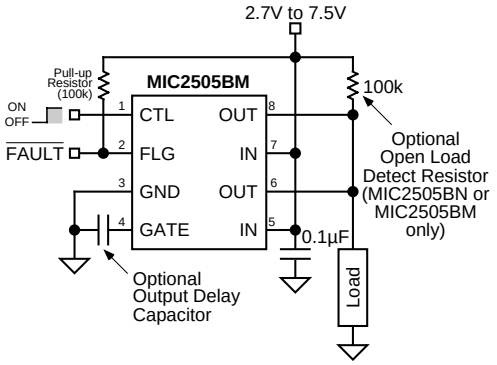

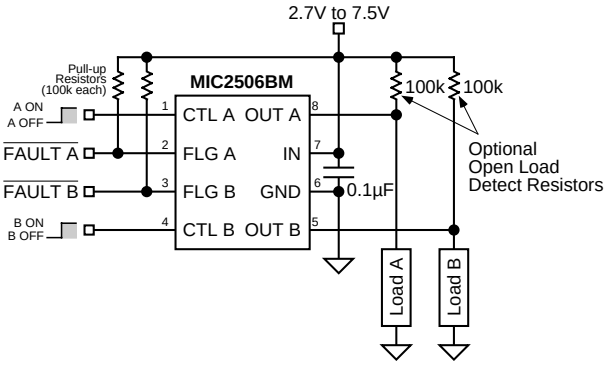

Single and Dual Switch/Circuit Breakers with Open-Load Detection and Fault Output

Ordering Information

Part Number	Control/Enable	Open-Load Detect	Temperature Range	Package	Lead Finish
Single-Switch					
MIC2505BM	Active-High	Yes	–40°C to +85°C	8-pin SOIC	Standard
MIC2505YM	Active-High	Yes	–40°C to +85°C	8-pin SOIC	Pb-Free
MIC2505BN	Active-High	Yes	–40°C to +85°C	8-pin DIP	Standard
MIC2505-1BM	Active-High	No	–40°C to +85°C	8-pin SOIC	Standard
MIC2505-1YM	Active-High	No	–40°C to +85°C	8-pin SOIC	Pb-Free
MIC2505-1BN	Active-High	No	–40°C to +85°C	8-pin DIP	Standard
MIC2505-2BM	Active-Low	No	–40°C to +85°C	8-pin SOIC	Standard
MIC2505-2YM	Active-Low	No	–40°C to +85°C	8-pin SOIC	Pb-Free
MIC2505-2BN	Active-Low	No	–40°C to +85°C	8-pin DIP	Standard
Dual Switch					
MIC2506BM	Active-High	Yes	–40°C to +85°C	8-pin SOIC	Standard
MIC2506YM	Active-High	Yes	–40°C to +85°C	8-pin SOIC	Pb-Free
MIC2506BN	Active-High	Yes	–40°C to +85°C	8-pin DIP	Standard

Pin Configuration

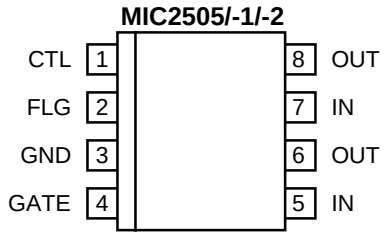

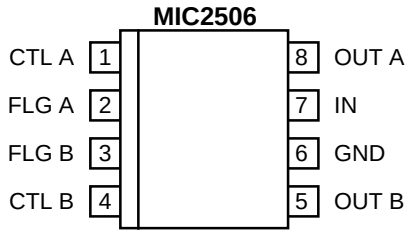

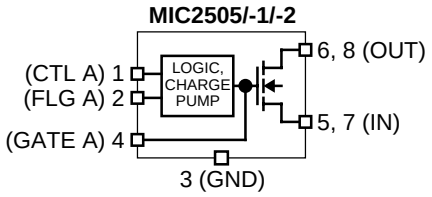

8-Pin SOIC (M)
8-Pin DIP (N)

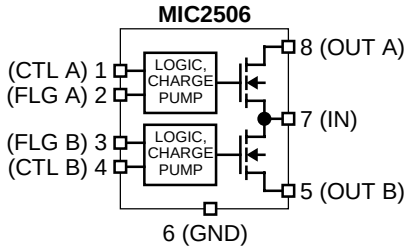

8-Pin SOIC (M)
8-Pin DIP (N)

Pin Description

Pin Number MIC2505 series	Pin Number MIC2506	Pin Name	Pin Function
1	1 / 4	CTL (A/B)	Control (Input): TTL compatible control input. High input typically > 1.8V. Low input typically < 1.6V. MIC2505, MIC2505-1 and MIC2506 are active high. MIC2505-2 is active low.
2	2 / 3	FLG (A/B)	Fault Flag (Output): Active-low, open-drain output. If CTL is low, indicates open load. If CTL is high, indicates current limit, thermal shutdown, or UVLO. *MIC2505-1 and -2 do not support open-load detect*.
3	6	GND	Ground: Return.
4	—	GATE	Output MOSFET Gate: Open for fastest rise time. Connect capacitor to ground to slow rise time. (See MIC2505 Turn-On Delay graph)
5, 7	7	IN	Supply Input: Output MOSFET drain. Also supplies IC's internal circuitry. Connect to supply. *MIC2505 series only:* Pins 5 and 7 must be externally connected together.
6, 8	8 / 5	OUT (A/B)	Switch Output: Output MOSFET source. Typically connect to switched side of load. Output voltage can be pulled above input voltage in off mode. *MIC2505 series only:* Pins 6 and 8 must be externally connected together.

Absolute Maximum Ratings

Supply Voltage (V_{IN}) 8.0V
Fault Flag Voltage (V_{FLG}) 7.5V
Fault Flag Current (I_{FLG}) 50mA
Output Voltage (V_{OUT}) 7.5V
Output Current (I_{OUT}) ..... Internally Limited
Gate Voltage (V_{GATE}) ..... V_{IN} + 15V
Control Input (V_{CTL}) ..... –0.3V to 15V
Storage Temperature (T_A) ..... –65°C to +150°C
Lead Temperature (Soldering 5 sec.) ..... 260°C

Operating Ratings

Supply Voltage (V_{IN}) ..... +2.7V to +7.5V
Ambient Operating Temperature (T_A) ..... –40°C to +85°C
Thermal Resistance
SOIC (θ_{JA}) ..... 160°C/W
DIP (θ_{JA}) ..... 105°C/W

Electrical Characteristics

V_{IN} = +5V; GATE = open; T_A = 25°C, **bold** indicates –40°C ≤ T_A ≤ +85°C; unless noted

Parameter	Condition		Min	Typ	Max	Units
Supply Current	MIC2505-1 MIC2506	V_{CTL} = logic 0, OUT = open V_{CTL} = logic 1, OUT = open		0.75 110	**5** **240**	µA µA
	MIC2505-2	V_{CTL} = logic 0, OUT = open V_{CTL} = logic 1, OUT = open		110 0.75	**240** **5**	µA µA
Control Input Voltage		V_{CTL} = logic 0 → logic 1 transition V_{CTL} = logic 1 → logic 0 transition	 **0.8**	2.1 1.9	**2.4**	V V
Control Input Current		V_{CTL} = logic 0 V_{CTL} = logic 1		0.01 0.01	**1** **1**	µA µA
Control Input Capacitance				1		pF
Output MOSFET Resistance	MIC2505 series	V_{IN} = 5V, T_A = 25°C V_{IN} = 5V, –40°C < T_A < +85°C V_{IN} = 3.3V, T_A = 25°C V_{IN} = 3.3V, –40°C < T_A < +85°C		30 35 	**50** **60** **60** **75**	mΩ mΩ mΩ mΩ
	MIC2506	V_{IN} = 5V, T_A = 25°C V_{IN} = 5V, –40°C < T_A < +85°C V_{IN} = 3.3V, T_A = 25°C V_{IN} = 3.3V, –40°C < T_A < +85°C		75 80 	**125** **150** **135** **165**	mΩ mΩ mΩ mΩ
Output Turn-On Delay	MIC2505 series	R_L = 10Ω, C_{GATE} = 0	**200**	850	**2000**	µs
	MIC2506	R_L = 10Ω each output	**100**	700	**2000**	µs
Output Turn-On Rise Time	MIC2505 series	R_L = 10Ω, C_{GATE} = 0	**500**	3000	**7500**	µs
	MIC2506	R_L = 10Ω each output	**200**	2000	**6000**	µs
Output Turnoff Delay	MIC2505 series	R_L = 10Ω, C_{GATE} = 0		0.7	**20**	µs
	MIC2506	R_L = 10Ω each output		0.8	**20**	µs
Output Turnoff Fall Time	MIC2505 series	R_L = 10Ω, C_{GATE} = 0		1.5	**20**	µs
	MIC2506	R_L = 10Ω each output		0.7	**20**	µs
Output Leakage Current					**10**	µA
Current Limit Threshold	MIC2505 series		**2**	4		A
	MIC2506		**1**	2	3	A
Open Load Threshold, **Note 1**		V_{CTL} = logic low, **Note 2**	**0.5**	1	**1.5**	V
Overtemperature Shutdown Threshold		T_J increasing T_J decreasing		135 125		°C °C
Error Flag Output Resistance		V_{IN} = 5V, I_L = 10mA V_{IN} = 3.3V, I_L = 10mA		10 15	**25** **40**	Ω Ω
Error Flag Off Current		V_{FLAG} = 5V		0.01	**1**	µA
UVLO Threshold		V_{IN} = increasing V_{IN} = decreasing	**2.2** **2.0**	2.5 2.3	**2.7** **2.5**	V V

General Note: Devices are ESD protected, however, handling precautions recommended.

General Note: All limits guaranteed by testing or statistical analysis.

Note 1: MIC2505-1 and -2 versions have no open load detect feature.

Note 2: Open-load threshold is the output voltage (V_{OUT}) where FLG becomes active (low) when CTL is low. OUT is pulled high by a 100k external resistor to V_{IN}.

Test Circuits

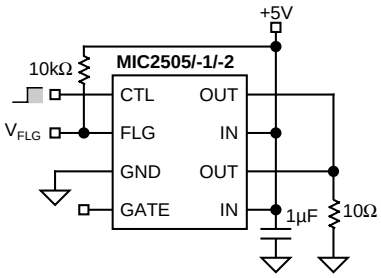

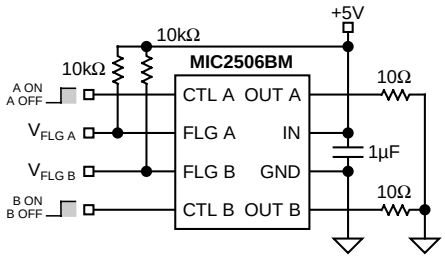

Typical Characteristics Note 2

MIC2505 Turn-On, Turnoff Characteristics

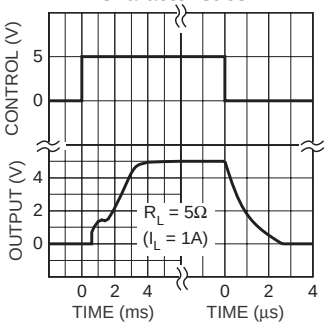

Output On Resistance vs. Supply Voltage

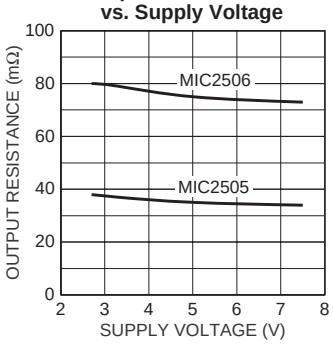

Output On Resistance vs. Temperature

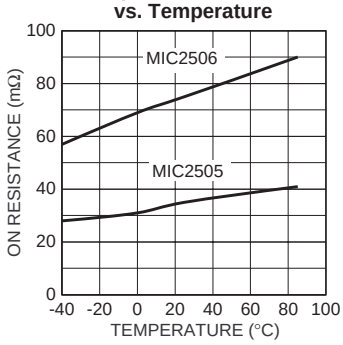

MIC2506 Turn-On, Turnoff Characteristics

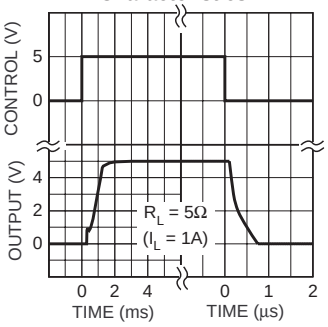

UVLO Threshold Voltage vs. Temperature

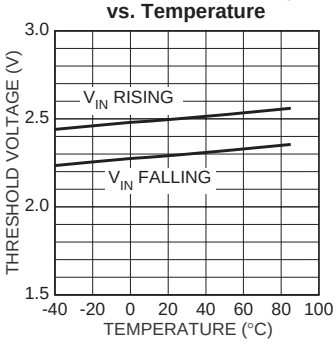

Error Flag Voltage vs. Error Flag Current

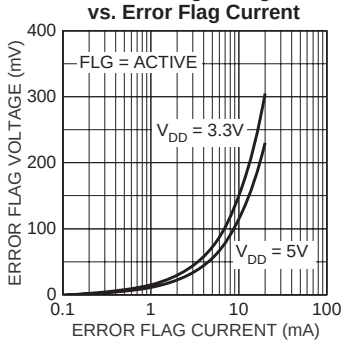

On-State Supply Current vs. Supply Voltage

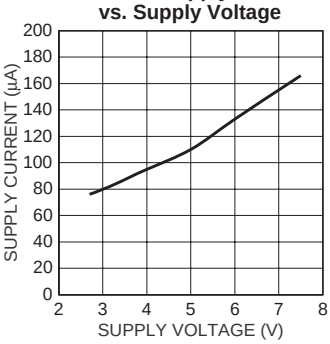

Off-State Supply Current vs. Supply Voltage

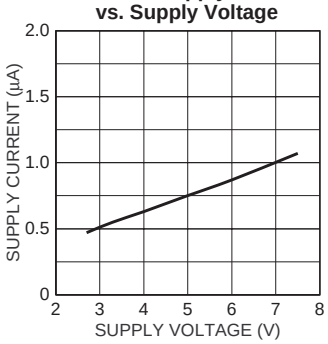

Control Threshold vs. Supply Voltage

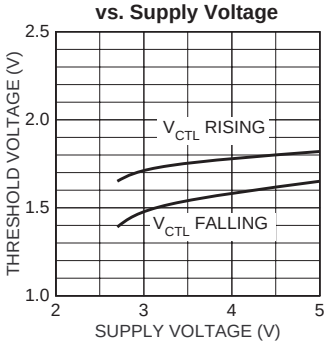

On-State Supply Current vs. Temperature

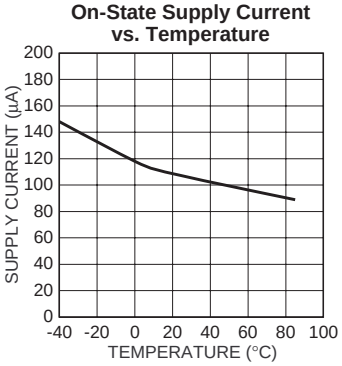

Off-State Supply Current vs. Temperature

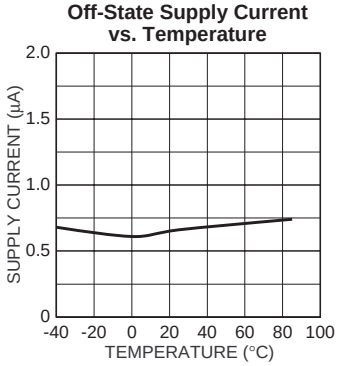

Control Threshold vs. Temperature

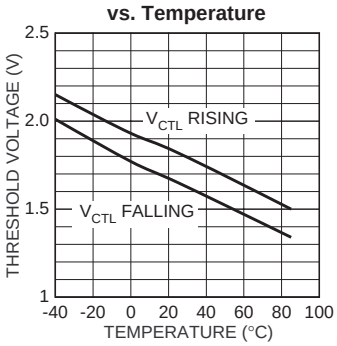

MIC2505 Turn-On Delay with External Gate Capacitance

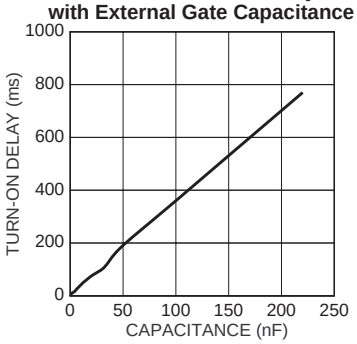

Block Diagrams

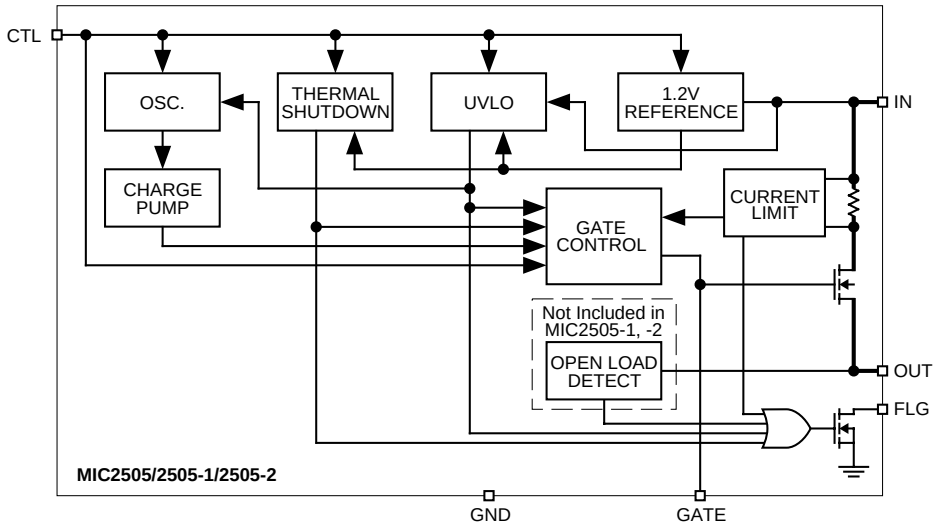

MIC2505-Series Block Diagram

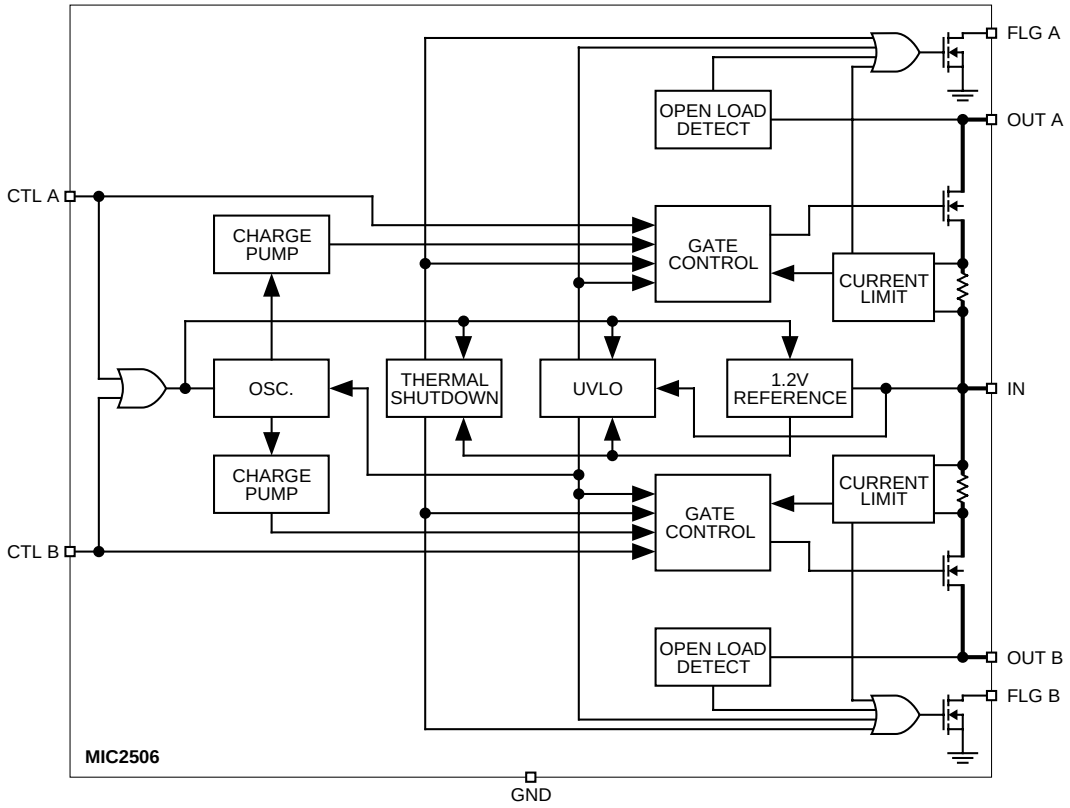

MIC2506 Block Diagram

Functional Description

The MIC2505-series and MIC2506 are high-side N-Channel switches. The MIC2505, MIC2505-1, and MIC2506 have active-high enable inputs. The MIC2505-2 has an active-low input. Fault conditions inhibit output transistor turn-on or turnoff when enabled.

Control Input

CTL (control input) activates the oscillator, thermal shutdown, UVLO, 1.2V reference, and gate control circuits. If there are no fault conditions, the output MOSFET turns on when enabled.

Reference

A 1.2V bandgap reference supplies a regulated voltage to the thermal shutdown and undervoltage lockout circuits. The reference is only active when CTL is enabled.

Oscillator/Charge Pump

The oscillator produces an 80kHz square wave output which drives the charge pump. The oscillator is enabled when CTL is active.

The charge pump is a voltage quintupler (5×). The charge pump capacitors are self contained.

Gate Control

The gate control circuit charges the output MOSFET gate from the charge pump output or discharges the MOSFET gate to ground as determined by CTL, thermal shutdown, or UVLO (undervoltage lockout).

An optional, external capacitor may be connected to the MIC2505 GATE to lengthen the rise time. This slows the turn on of the MOSFET output switch. (See “MIC2505 Turn-On Delay” graph.) Since this pin connects directly to the MOSFET gate, use ESD precautions when contacting components connected to this pin. Leakage resistance may increase turn-on times.

Input and Output

IN (input) is the supply connection to the logic circuitry and the drain of the output MOSFET. OUT (output) is the source of the output MOSFET. In a typical circuit, current flows through the switch from IN to OUT toward the load.

The output MOSFET and driver circuitry are also designed to allow the MOSFET source to be externally forced to a higher voltage than the drain ($V_{OUT} > V_{IN}$) when the output switch is off and V_{IN} > UVLO minimum. In this situation, the MIC2505/6 avoids undesirable drain to body diode reverse current flow by grounding the body when the switch is off. (The conventional method for optimum turn-on threshold has the source connected to the body. This would allow a large current to flow when $V_{source} > V_{drain} + 0.6V$.)

MIC2505 Series Only

Duplicate IN and OUT leads are not internally connected. Connect both IN pins to the supply. Connect both OUT leads to the load.

Thermal Shutdown

Thermal shutdown shuts off the output MOSFET and signals the fault flag if the die temperature exceeds 135°C. 10°C of hysteresis prevents the switch from turning on until the die temperature drops to 125°C.

Overtemperature detection functions only when the control input is enabled (output MOSFET is on). Both MIC2506 outputs are shut off during overtemperature, and both flags will go low.

Undervoltage Lockout

UVLO (undervoltage lockout) prevents the output MOSFET from turning on until V_{IN} (input voltage) exceeds 2.5V typical. After the switch turns on, if V_{IN} drops below 2.3V typical, UVLO shuts off the output MOSFET and turns the fault flag on (active low) until V_{IN} drops below 1.5V.

Undervoltage detection functions only when the control input is enabled (output MOSFET is on).

Overcurrent Limit

The overcurrent limit is preset internally. The preset level prevents damage to the output MOSFET but allows a minimum current of 2A through the output MOSFET of the MIC2505-series and 1A for each output MOSFET of the MIC2506. Output current is monitored by sensing the voltage drop across the output MOSFET drain metal resistance.

Overcurrent detection functions only when the control input is enabled (output MOSFET is on) and V_{IN} is above the UVLO threshold.

Open-Load Detection

Open-load detection is available only on the MIC2505 and MIC2506. The open-load detection feature is not included in the MIC2505-1 or -2 versions.

Open-load detection indicates the absence of an output load by activating the fault flag. Open-load detection is optional and is enabled by connecting a high-value pull-up resistor between IN and OUT. If there is no load, the circuit detects a high OUT (output) voltage (typically ≥1V) and signals the fault flag. Under normal conditions, the low resistance of a typical load pulls OUT low. Open-load detection functions only when the control input is low (output MOSFET is off).

Fault Flag

FLG is an N-channel, open-drain MOSFET output. The fault-flag is active (low) for one or more of the following conditions: open load (except MIC2505-1 and -2 versions), undervoltage, current limit, or thermal shutdown. The flag output MOSFET is capable of sinking a 10mA load to typically 100mV above ground.

Applications Information

Supply Filtering

A 0.1µF to 1µF bypass capacitor from IN to GND, located at the device is strongly recommended to control supply transients. Without a bypass capacitor, an output short may cause sufficient ringing on the input (from supply lead inductance) to destroy the internal control circuitry.

Input transients must not exceed the absolute maximum supply voltage ($V_{IN\ max}$ = 7.5V) even for a short duration.

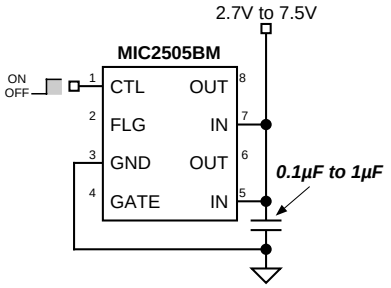

Figure 1. Supply Bypassing

The bypass capacitor may be omitted only if board design precautions are followed, such as using extremely short supply leads or power and ground planes.

Control Input

CTL must be driven logic high or logic low, or be pulled high or low for a clearly defined input. Floating the input may cause unpredictable operation. Add a diode clamp if negative spikes may occur. See Figure 2.

Open-Load Detection

Refer to "Typical Applications" (first page). Open-load detection is available only on the MIC2505 and MIC2506. For USB power distribution applications, the open-load detection feature is not included in the MIC2505-1 or -2 versions.

The optional open-load detection resistor supplies a small pull-up current to the load when the output switch is off. (A 100k resistor will draw 50µA from a 5V supply.) Normally, the load dominates, pulling OUT low. If the load is absent, the optional resistor pulls OUT high, activating the fault flag if CTL is off.

When a load is switched off with CTL, capacitance on the output may cause the open-load function to pull the flag low until the capacitor is discharged below approximately 2.4V.

Omit the pull-up resistor when open load detection is not required and for minimum off-state supply current.

Power Bus Switch

The MIC2505/6 family features a MOSFET reverse current flow prevention circuit. This prevents current from flowing backwards (from OUT to IN) when CTL is disabled as long as V_{IN} is above UVLO minimum. In Figure 2, when U1 is on and U2 is off, this feature prevents current flow from the load (5V) backward through U2 to the 3.3V supply. (If a discrete MOSFET and driver were used, the MOSFET's internal body diode would short the 5V load to the 3.3V supply.)

FLG will be active (low) on any switch that is off whenever the load voltage is greater than the open load threshold (approximately 1V) except for MIC2505-1 and MIC2505-2.

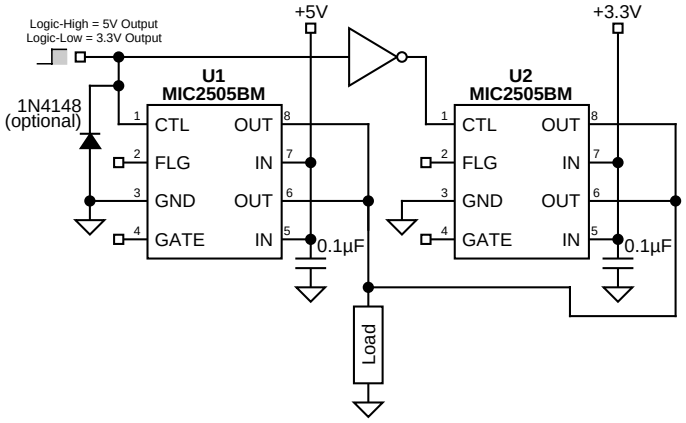

Figure 2. 5V/3.3V Switch Concept

This circuit's function would otherwise require a dual driver, two MOSFETs, plus two diodes (or a dual driver plus four MOSFETs).

Hot Plug-In Applications (Soft-Start)

The MIC2505/6 family can be used to protect the socket-side and card-side of a supply circuit from transients caused when a capacitive load is connected to an active supply.

The switch presents a high impedance when off, and slowly becomes a low impedance as it turns on. This reduces the inrush current and related voltage drop that result from charging a capacitive load.

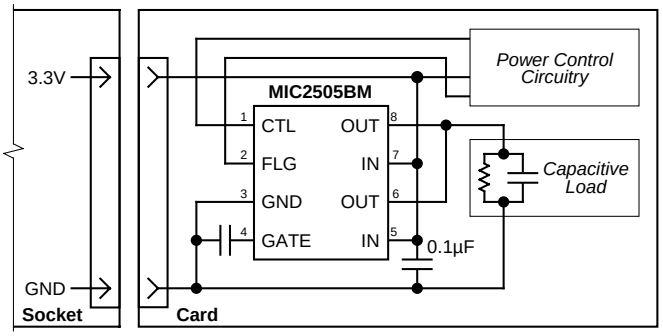

Figure 3. Hot Plug-In Concept

A gate capacitor may be added to the MIC2505 to slow the turn on time even more, reducing the inrush current. See "MIC2505 Turn-On Delay" graph. The UVLO feature insures that each time the card is removed and V_{IN} = 0 that the gate of the output switch is discharged to zero volts. A controlled turn-on is executed each time a board is plugged in, even with multiple insertions.

Applications Information

USB Application

Figure 4 depicts a low cost and robust implementation of a four-port, self-powered USB hub circuit employing ganged overcurrent protection.

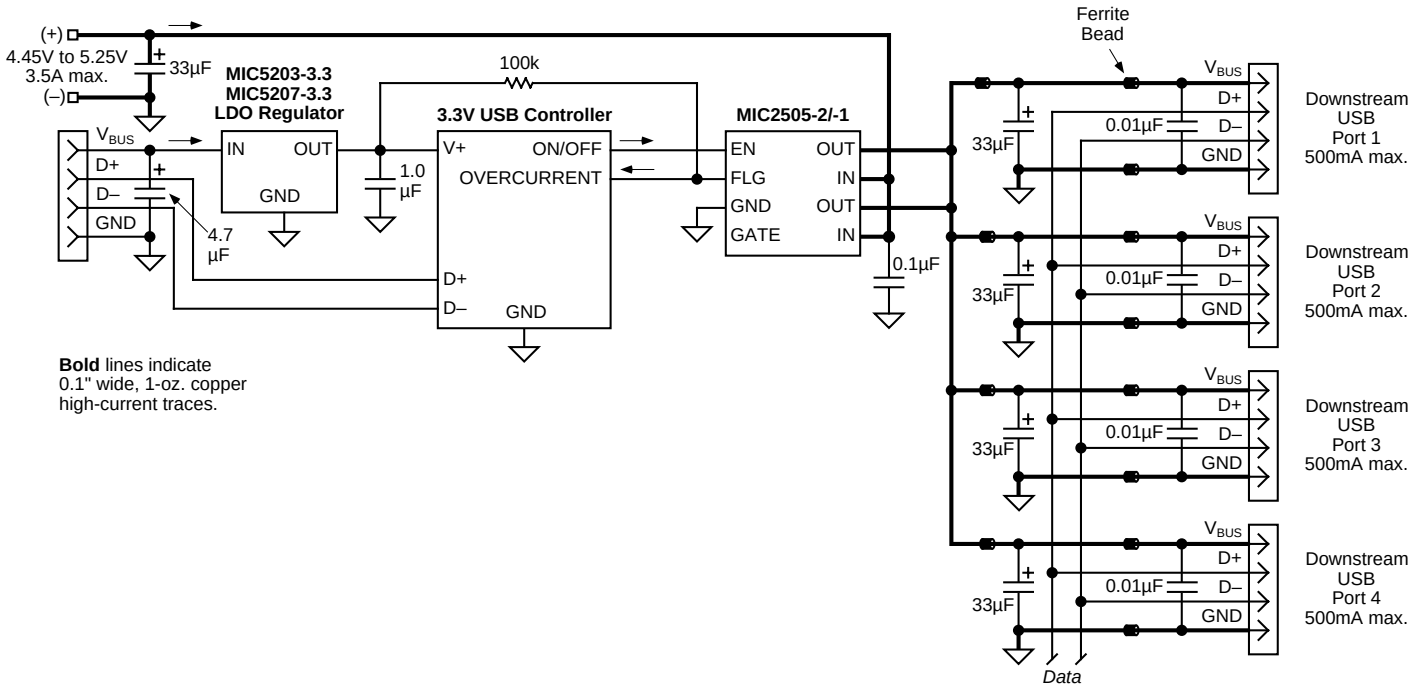

Figure 4. Ganged-Switch Self-Powered Hub

Package Information

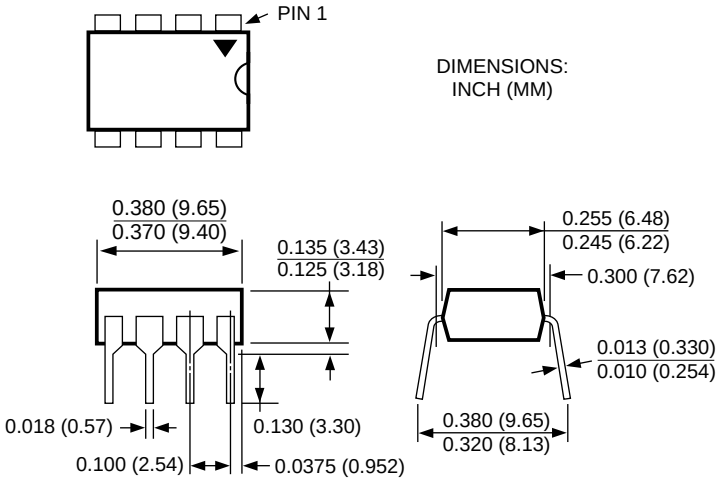

8-Pin Plastic DIP (N)

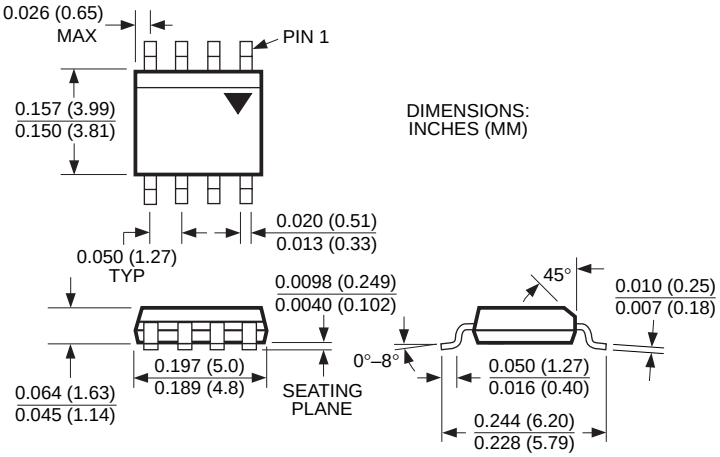

8-Pin SOP (M)

MICREL, INC. 1849 FORTUNE DRIVE SAN JOSE, CA 95131 USA

TEL + 1 (408) 944-0800 FAX + 1 (408) 474-1000 WEB http://www.micrel.com

The information furnished by Micrel in this data sheet is believed to be accurate and reliable. However, no responsibility is assumed by Micrel for its use. Micrel reserves the right to change circuitry and specifications at any time without notification to the customer.

Micrel Products are not designed or authorized for use as components in life support appliances, devices or systems where malfunction of a product can reasonably be expected to result in personal injury. Life support devices or systems are devices or systems that (a) are intended for surgical implant into the body or (b) support or sustain life, and whose failure to perform can be reasonably expected to result in a significant injury to the user. A Purchaser's use or sale of Micrel Products for use in life support appliances, devices or systems is at Purchaser's own risk and Purchaser agrees to fully indemnify Micrel for any damages resulting from such use or sale.

© 2004 Micrel, Incorporated.

Компания «ЭлектроПласт» предлагает заключение долгосрочных отношений при поставках импортных электронных компонентов на взаимовыгодных условиях!

Наши преимущества:

- Оперативные поставки широкого спектра электронных компонентов отечественного и импортного производства напрямую от производителей и с крупнейших мировых складов;
- Поставка более 17-ти миллионов наименований электронных компонентов;
- Поставка сложных, дефицитных, либо снятых с производства позиций;
- Оперативные сроки поставки под заказ (от 5 рабочих дней);
- Экспресс доставка в любую точку России;
- Техническая поддержка проекта, помощь в подборе аналогов, поставка прототипов;
- Система менеджмента качества сертифицирована по Международному стандарту ISO 9001;
- Лицензия ФСБ на осуществление работ с использованием сведений, составляющих государственную тайну;
- Поставка специализированных компонентов (Xilinx, Altera, Analog Devices, Intersil, Interpoint, Microsemi, Aeroflex, Peregrine, Syfer, Eurofarad, Texas Instrument, Miteq, Cobham, E2V, MA-COM, Hittite, Mini-Circuits,General Dynamics и др.);

Помимо этого, одним из направлений компании «ЭлектроПласт» является направление «Источники питания». Мы предлагаем Вам помощь Конструкторского отдела:

- Подбор оптимального решения, техническое обоснование при выборе компонента;
- Подбор аналогов;
- Консультации по применению компонента;
- Поставка образцов и прототипов;
- Техническая поддержка проекта;
- Защита от снятия компонента с производства.

Как с нами связаться

Телефон: 8 (812) 309 58 32 (многоканальный)
Факс: 8 (812) 320-02-42
Электронная почта: org@eplast1.ru
Адрес: 198099, г. Санкт-Петербург, ул. Калинина, дом 2, корпус 4, литера А.