DS1973
4Kb EEPROM iButton

SPECIAL FEATURES

- 4096 bits Electrically Erasable Programmable Read Only Memory (EEPROM)
- Overdrive mode boosts communication speed to 142kbps
- 256-bit scratchpad ensures integrity of data transfer
- Memory partitioned into 256-bit pages for packetizing data
- Reduces control, address, data and power to a single data pin
- 8-bit family code specifies DS1973 communication requirements to reader
- Reads and writes over a wide voltage range of 2.8V to 6.0V from -40°C to +85°C

F3 MicroCan

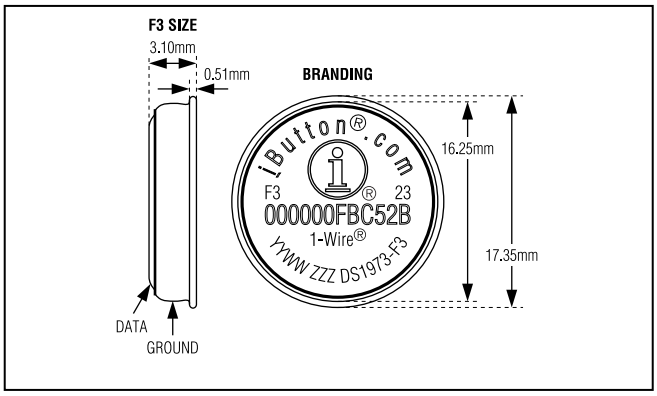

F5 MicroCan

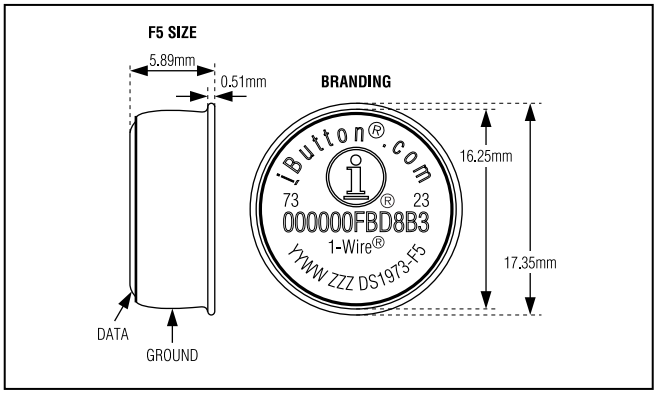

COMMON iButton FEATURES

- Unique, factory-lasered and tested 64-bit registration number (8-bit family code + 48-bit serial number + 8-bit CRC tester) assures absolute identity because no two parts are alike
- Multidrop controller for MicroLAN
- Digital identification and information by momentary contact
- Chip-based data carrier compactly stores information
- Data can be accessed while affixed to object
- Economically communicates to bus master with a single digital signal at 16.3kbps
- Standard 16mm diameter and 1-Wire® protocol ensure compatibility with iButton® family
- Button shape is self-aligning with cup-shaped probes
- Durable stainless steel case engraved with registration number withstands harsh environments
- Easily affixed with self-stick adhesive backing, latched by its flange, or locked with a ring pressed onto its rim
- Presence detector acknowledges when reader first applies voltage

ORDERING INFORMATION

PART	PIN-PACKAGE
DS1973-F3+	F3 MicroCan
DS1973-F5+	F5 MicroCan

+*Denotes a lead(Pb)-free/RoHS-compliant package.*

EXAMPLES OF ACCESSORIES

DS9096P	Self-Stick Adhesive Pad
DS9101	Multi-Purpose Clip
DS9093RA	Mounting Lock Ring
DS9093A	Snap-In Fob
DS9092	iButton Probe

iButton and 1-Wire are registered trademarks of Maxim Integrated Products, Inc.

iButton DESCRIPTION

The DS1973 4Kb EEPROM iButton is a rugged read/write data carrier that identifies and stores relevant information about the product or person to which it is attached. This information can be accessed with minimal hardware, for example a single port pin of a micro-controller. The DS1973 consists of a factory-lasered registration number that includes a unique 48-bit serial number, an 8-bit CRC, and an 8-bit Family Code (23H) plus 4096 bits of EEPROM. The power to program and read the DS1973 is derived entirely from the 1-Wire communication line. The memory is organized as sixteen pages of 256 bits each. The 64-bit registration number provides a guaranteed unique identity which allows for absolute traceability. Data is transferred serially via the 1-Wire protocol which requires only a single data lead and a ground return. The durable MicroCan package is highly resistant to harsh environments such as dirt, moisture, and shock. Its compact button-shaped profile is self-aligning with cup-shaped receptacles, allowing the DS1973 to be used easily by human operators or automatic equipment. Accessories permit the DS1973 to be mounted on printed circuit boards, plastic key fobs, photo-ID badges, ID bracelets, and many other objects. Applications include work-in-progress tracking, electronic travelers, access control and storage of calibration constants.

OVERVIEW

The block diagram in Figure 1 shows the relationships between the major control and memory sections of the DS1973. The DS1973 has three main data components: 1) 64-bit lasered ROM, 2) 256-bit scratchpad, and 3) 4096-bit EEPROM. The bus master must first provide one of the ROM function commands before the memory functions become accessible. All data is read and written least significant bit first.

The DS1973 contains the same memory chip as the DS2433. For a full description of the logical behavior, please refer to the DS2433 data sheet.

DS1973 BLOCK DIAGRAM Figure 1

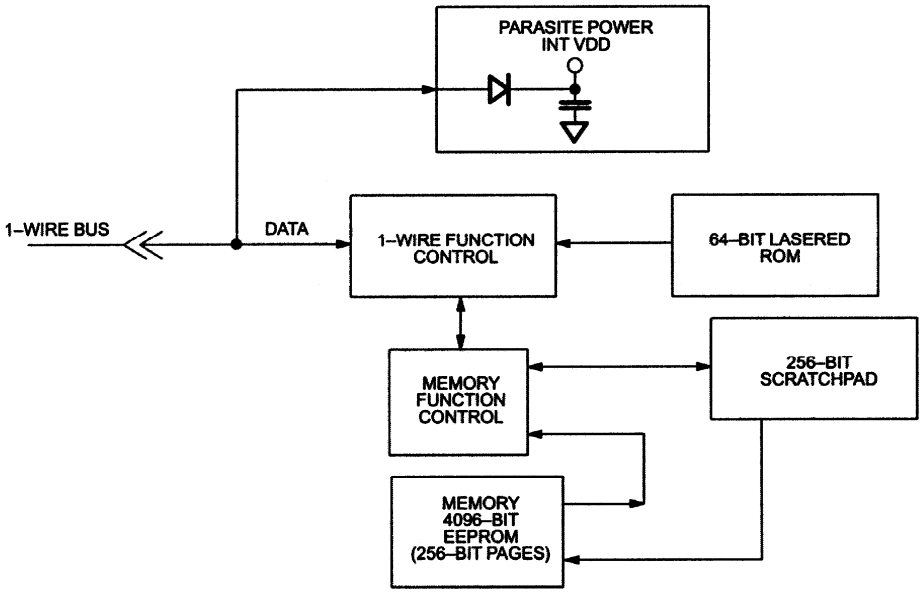

REVISION HISTORY

REVISION DATE	DESCRIPTION	PAGES CHANGED
071508	Updated the *F3 MicroCan* and *F5 MicroCan* face brands with the latest per PCN H020201.	1
8/09	Added the + sign to the PART numbers in the *Ordering Information* table, indicating lead(Pb)-free/RoHS-compliant packages.	1
	Removed the UL#913 bullet from the *Common iButton Features* section.	1

Maxim cannot assume responsibility for use of any circuitry other than circuitry entirely embodied in a Maxim product. Maxim cannot assume responsibility for use of any circuitry other than circuitry entirely embodied in a Maxim product. No circuit patent licenses are implied. Maxim reserves the right to change the circuitry and specifications without notice at any time.

Maxim Integrated Products, 120 San Gabriel Drive, Sunnyvale, CA 94086 408-737-7600

© 2009 Maxim Integrated Products Maxim is a registered trademark of Maxim Integrated Products, Inc.

Компания «ЭлектроПласт» предлагает заключение долгосрочных отношений при поставках импортных электронных компонентов на взаимовыгодных условиях!

Наши преимущества:

- Оперативные поставки широкого спектра электронных компонентов отечественного и импортного производства напрямую от производителей и с крупнейших мировых складов;
- Поставка более 17-ти миллионов наименований электронных компонентов;
- Поставка сложных, дефицитных, либо снятых с производства позиций;
- Оперативные сроки поставки под заказ (от 5 рабочих дней);
- Экспресс доставка в любую точку России;
- Техническая поддержка проекта, помощь в подборе аналогов, поставка прототипов;
- Система менеджмента качества сертифицирована по Международному стандарту ISO 9001;
- Лицензия ФСБ на осуществление работ с использованием сведений, составляющих государственную тайну;
- Поставка специализированных компонентов (Xilinx, Altera, Analog Devices, Intersil, Interpoint, Microsemi, Aeroflex, Peregrine, Syfer, Eurofarad, Texas Instrument, Miteq, Cobham, E2V, MA-COM, Hittite, Mini-Circuits,General Dynamics и др.);

Помимо этого, одним из направлений компании «ЭлектроПласт» является направление «Источники питания». Мы предлагаем Вам помощь Конструкторского отдела:

- Подбор оптимального решения, техническое обоснование при выборе компонента;
- Подбор аналогов;
- Консультации по применению компонента;
- Поставка образцов и прототипов;
- Техническая поддержка проекта;
- Защита от снятия компонента с производства.

Как с нами связаться

Телефон: 8 (812) 309 58 32 (многоканальный)
Факс: 8 (812) 320-02-42
Электронная почта: org@eplast1.ru
Адрес: 198099, г. Санкт-Петербург, ул. Калинина, дом 2, корпус 4, литера А.