Dual, High Voltage Current Shunt Monitor

Data Sheet

AD8213

FEATURES

±4000 V HBM ESD
High common-mode voltage range
- **−2 V to +65 V operating**
- **−3 V to +68 V survival**

Buffered output voltage
Wide operating temperature range
- **−40°C to +125°C for Y grade**
- **−40°C to +150°C for H grade**

Excellent ac and dc performance
- **3 µV/°C typical offset drift**
- **−10 ppm/°C typical gain drift**
- **120 dB typical CMRR at dc**

APPLICATIONS

High-side current sensing
- **Motor controls**
- **Transmission controls**
- **Diesel injection controls**
- **Engine management**
- **Suspension controls**
- **Vehicle dynamic controls**
- **DC-to-DC converters**

FUNCTIONAL BLOCK DIAGRAM

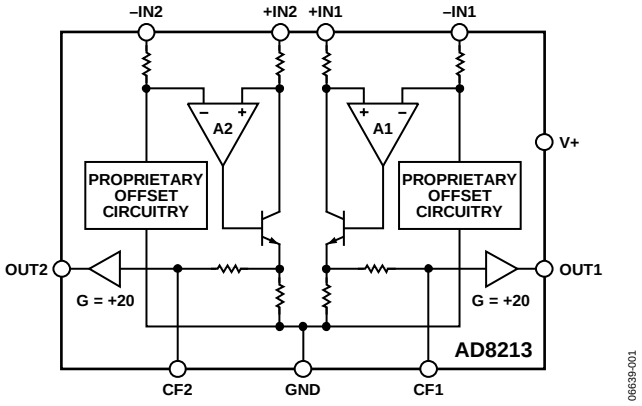

Figure 1.

GENERAL DESCRIPTION

The AD8213 is a dual-channel, precision current sense amplifier. It features a set gain of 20 V/V, with a maximum ±0.5% gain error over the entire temperature range. The buffered output voltage directly interfaces with any typical converter. Excellent common-mode rejection from −2 V to +65 V, is independent of the 5 V supply. The AD8213 performs unidirectional current measurements across a shunt resistor in a variety of industrial and automotive applications, such as motor control, solenoid control, or battery management.

Special circuitry is devoted to output linearity being maintained throughout the input differential voltage range of 0 mV to 250 mV, regardless of the common-mode voltage present. The AD8213 also features additional pins that allow the user to low-pass filter the input signal before amplifying, via an external capacitor to ground. The AD8213 has an operating temperature range of −40°C to +125°C for the Y grade, −40°C to +150°C for the H grade and is offered in a small 10-lead MSOP package.

Rev. C Document Feedback

Information furnished by Analog Devices is believed to be accurate and reliable. However, no responsibility is assumed by Analog Devices for its use, nor for any infringements of patents or other rights of third parties that may result from its use. Specifications subject to change without notice. No license is granted by implication or otherwise under any patent or patent rights of Analog Devices. Trademarks and registered trademarks are the property of their respective owners.

One Technology Way, P.O. Box 9106, Norwood, MA 02062-9106, U.S.A.
Tel: 781.329.4700 **©2007–2013 Analog Devices, Inc. All rights reserved.**
Technical Support **www.analog.com**

TABLE OF CONTENTS

Features ... 1
Applications ... 1
Functional Block Diagram ... 1
General Description ... 1
Revision History ... 2
Specifications ... 3
Absolute Maximum Ratings ... 4
ESD Caution ... 4
Pin Configuration and Function Descriptions ... 5
Typical Performance Characteristics ... 6
Theory of Operation ... 10
Application Notes ... 11
Output Linearity ... 11
Low-Pass Filtering ... 11
Applications Information ... 12
High-Side Current Sense with a Low-Side Switch ... 12
High-Side Current Sensing ... 12
Low-Side Current Sensing ... 12
Bidirectional Current Sensing ... 13
Outline Dimensions ... 14
Ordering Guide ... 14

REVISION HISTORY

10/13—Rev. B to Rev. C

Changed Offset Voltage (RTI) Parameter from ±1 mV Max to ±1 mV Typ; Table 1 ... 3

4/13—Rev. A to Rev. B

Added H Grade (Throughout) ... 1
Changes to Table 1 ... 3
Added AD8213WH Temperature Range; Table 2 ... 4
Updated Outline Dimensions ... 14
Changes to Ordering Guide ... 14

5/09—Rev. 0 to Rev. A

Changes to Ordering Guide ... 14

5/07—Revision 0: Initial Version

SPECIFICATIONS

T_{OPR} = operating temperature range, V_S = 5 V, R_L = 25 kΩ (R_L is the output load resistor), unless otherwise noted.

Table 1.

Parameter	Test Conditions/Comments	Min	Typ	Max	Unit
GAIN					
Initial			20		V/V
Accuracy	V_O ≥ 0.1 V dc		±0.25		%
Accuracy Over Temperature	T_{OPR}			±0.5	%
Gain vs. Temperature		0	−10	−25	ppm/°C
VOLTAGE OFFSET					
Offset Voltage (RTI)	25°C		±1		mV
Over Temperature (RTI)	T_{OPR}			±2.2	mV
Offset Drift	T_{OPR}			±12	μV/°C
INPUT					
Input Impedance					
Differential			5		kΩ
Common Mode	V common mode > 5 V		5		MΩ
	V common mode < 5 V		3.5		kΩ
Common-Mode Input Voltage Range	Common mode continuous	−2		+65	V
Differential Input Voltage Range	Differential input voltage		250		mV
Common-Mode Rejection	T_{OPR}, f = DC, V_{CM} > 5 V (see Figure 5)	100	120		dB
	T_{OPR}, f = DC, V_{CM} < 5 V (see Figure 5)	80	90		dB
OUTPUT					
Output Voltage Range Low	AD8213Y, AD8213WY	0.1	0.05		V
	AD8213WH	0.15			V
Output Voltage Range High	AD8213Y, AD8213WY		4.95	4.9	V
	AD8213WH			4.88	V
Output Impedance			2		Ω
FILTER RESISTOR	C_F access to resistor for low-pass filter	18	20	22	kΩ
DYNAMIC RESPONSE					
Small Signal −3 dB Bandwidth			500		kHz
Slew Rate	C_{OUT} = 20 pF, no filter capacitor (C_F)		4.5		V/μs
	C_{OUT} = 20 pF, C_F = 20 pF		2.7		V/μs
NOISE					
0.1 Hz to 10 Hz, RTI			7		μV p-p
Spectral Density, 1 kHz, RTI			70		nV/√Hz
POWER SUPPLY					
Operating Range		4.5		5.5	V
Quiescent Current Over Temperature	V_{CM} > 5 V, per amplifier[1], total supply current for two channels				
	AD8213Y, AD8213WY		2.5	3.75	mA
	AD8213WH			4.5	mA
Power Supply Rejection Ratio	AD8213Y, AD8213WY	76			dB
	AD8213WH	74			dB
TEMPERATURE RANGE					
For Specified Performance	AD8213Y, AD8213WY	−40		+125	°C
	AD8213WH	−40		+150	°C

[1] When the input common mode is less than 5 V, the supply current increases. This can be calculated by $I_S = -0.52(V_{CM}) + 4.9$ (see Figure 11).

ABSOLUTE MAXIMUM RATINGS

Table 2.

Parameter	Rating
Supply Voltage	12.5 V
Continuous Input Voltage	−3 V to +68 V
Reverse Supply Voltage	−0.3 V
HBM (Human Body Model) ESD Rating	±4000 V
CDM (Charged Device Model) ESD Rating	±1000 V
Operating Temperature Range	
AD8213Y, AD8213WY	−40°C to +125°C
AD8213WH	−40°C to +150°C
Storage Temperature Range	−65°C to +150°C
Output Short-Circuit Duration	Indefinite

Stresses above those listed under Absolute Maximum Ratings may cause permanent damage to the device. This is a stress rating only; functional operation of the device at these or any other conditions above those indicated in the operational section of this specification is not implied. Exposure to absolute maximum rating conditions for extended periods may affect device reliability.

ESD CAUTION

ESD (electrostatic discharge) sensitive device. Charged devices and circuit boards can discharge without detection. Although this product features patented or proprietary protection circuitry, damage may occur on devices subjected to high energy ESD. Therefore, proper ESD precautions should be taken to avoid performance degradation or loss of functionality.

PIN CONFIGURATION AND FUNCTION DESCRIPTIONS

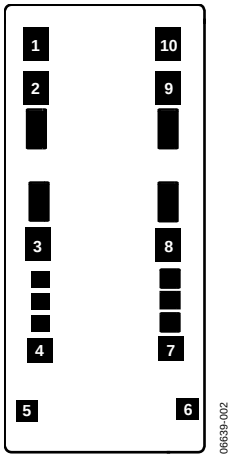

Figure 2. Metallization Diagram

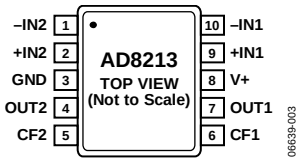

Figure 3. Pin Configuration

Table 3. Pin Function Descriptions

Pin No.	Mnemonic	X	Y	Description
1	–IN2	–401	677	Inverting input of the second channel.
2	+IN2	–401	510	Noninverting input of the second channel.
3	GND	–401	–53	Ground.
4	OUT2	–394	–500	Output of the second channel.
5	CF2	–448	–768	Low-pass filter pin for the second channel.
6	CF1	448	–768	Low-pass filter pin for the first channel.
7	OUT1	394	–500	Output of the first channel.
8	V+	401	–61	Supply.
9	+IN1	401	510	Noninverting input of the first channel.
10	–IN1	401	677	Inverting input of the first channel.

TYPICAL PERFORMANCE CHARACTERISTICS

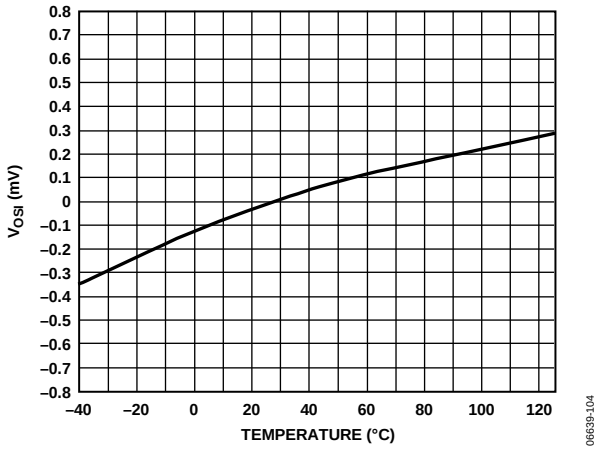

Figure 4. Typical Offset Drift

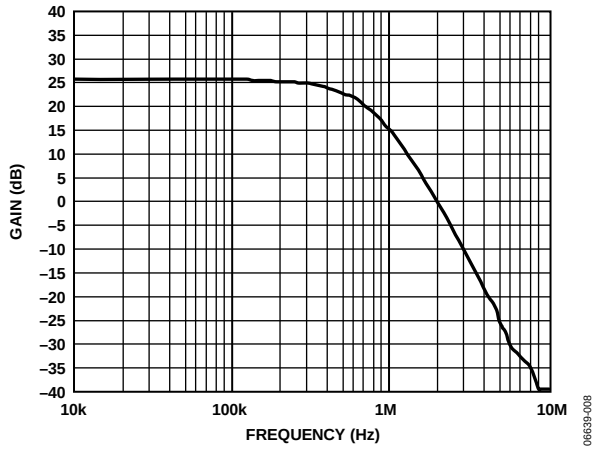

Figure 7. Typical Small Signal Bandwidth (V_{OUT} = 200 mV p-p)

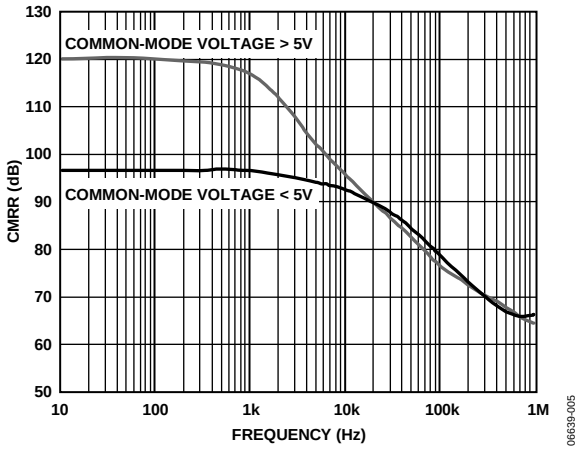

Figure 5. CMRR vs. Frequency

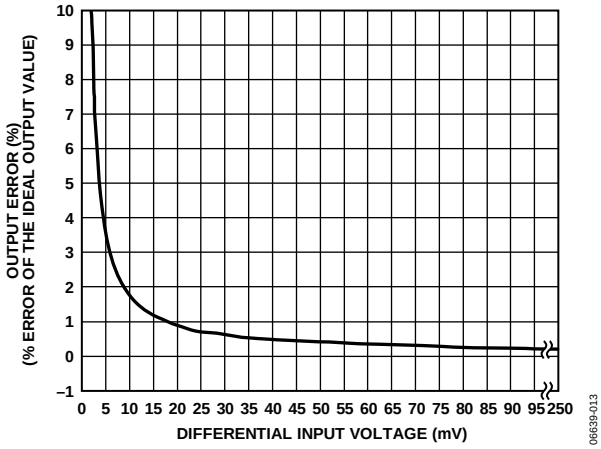

Figure 8. Total Output Error vs. Differential Input Voltage

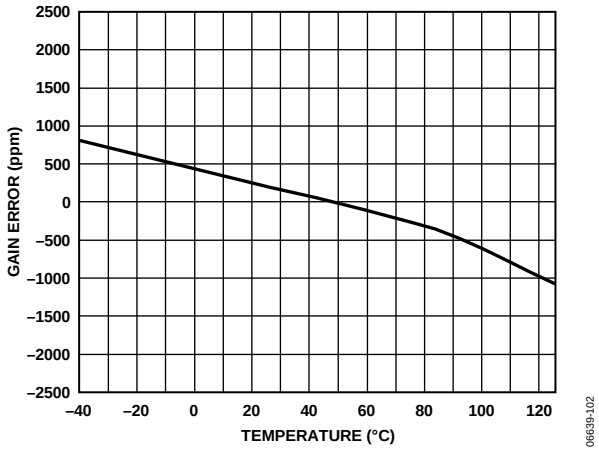

Figure 6. Typical Gain Drift

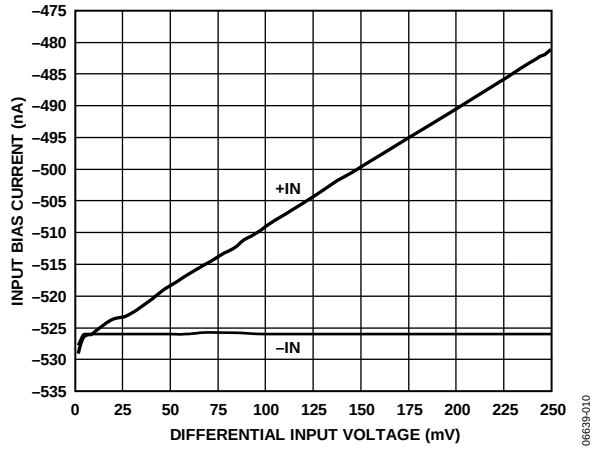

Figure 9. Input Bias Current vs. Differential Input Voltage (V_{CM} = 0 V) (Per Channel)

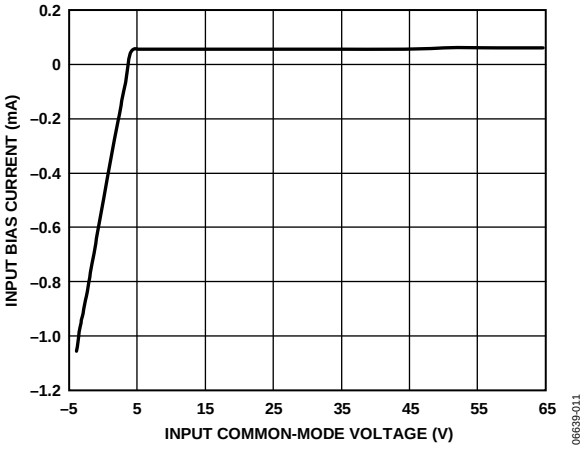

Figure 10. Input Bias Current vs. Common-Mode Voltage (Per Input)

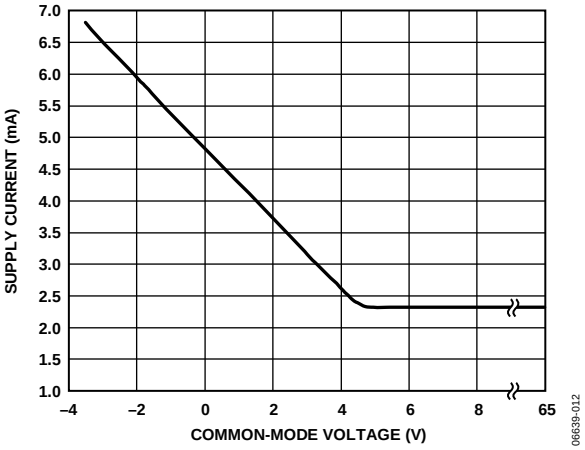

Figure 11. Supply Current vs. Common-Mode Voltage

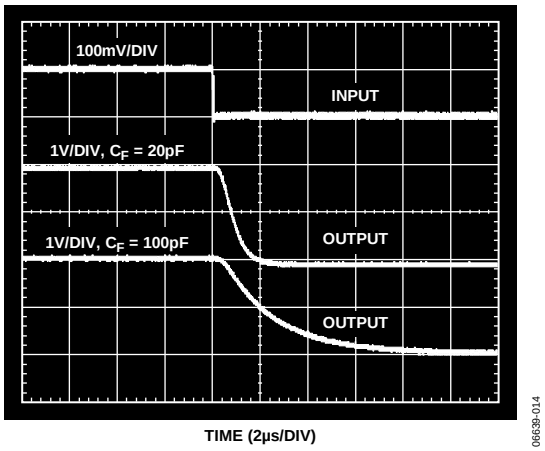

Figure 12. Fall Time

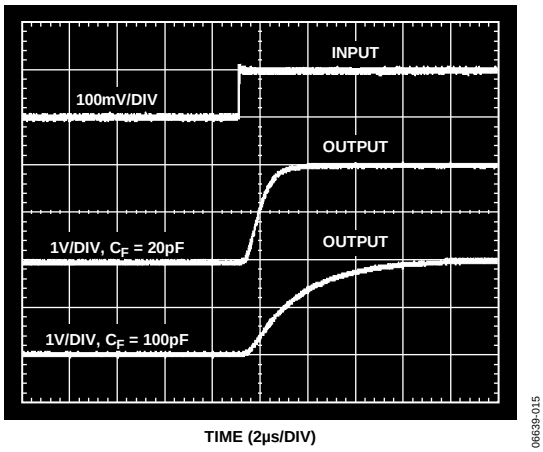

Figure 13. Rise Time

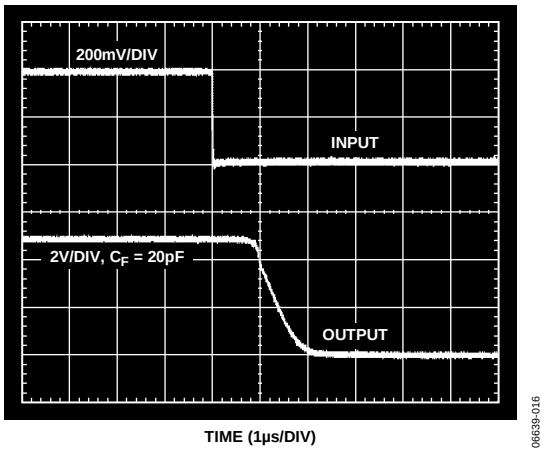

Figure 14. Differential Overload Recovery (Falling)

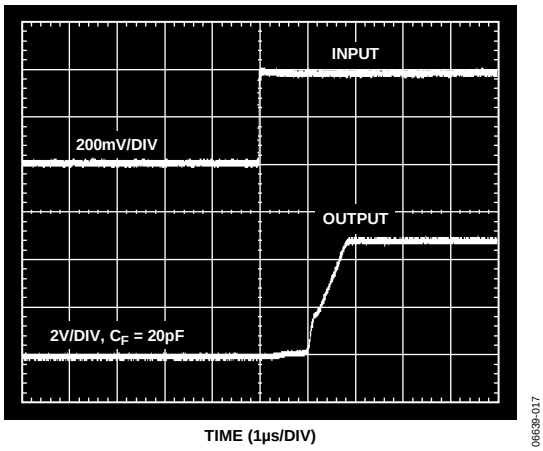

Figure 15. Differential Overload Recovery (Rising)

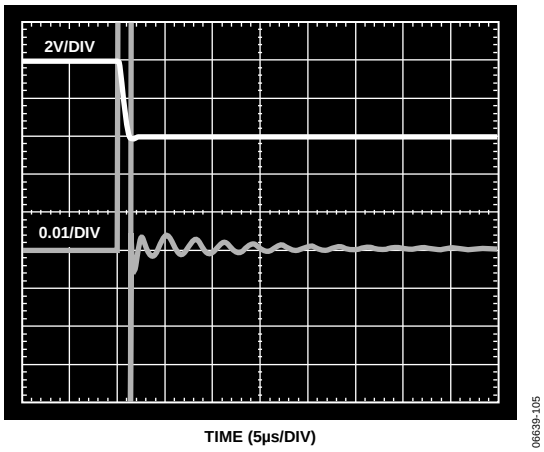

Figure 16. Settling Time (Falling)

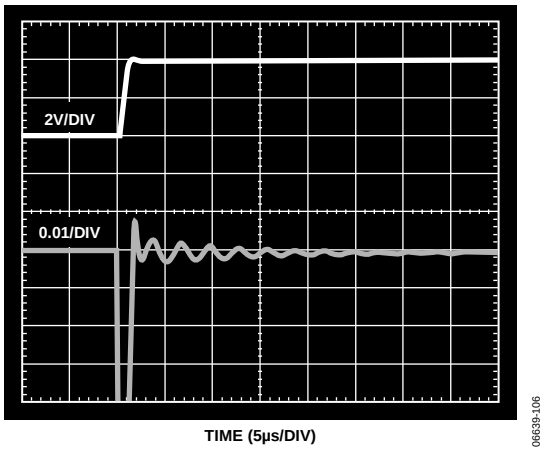

Figure 17. Settling Time (Rising)

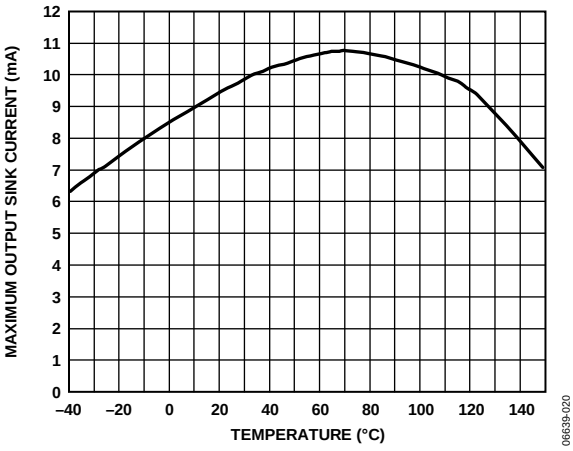

Figure 18. Output Sink Current vs. Temperature (Per Channel)

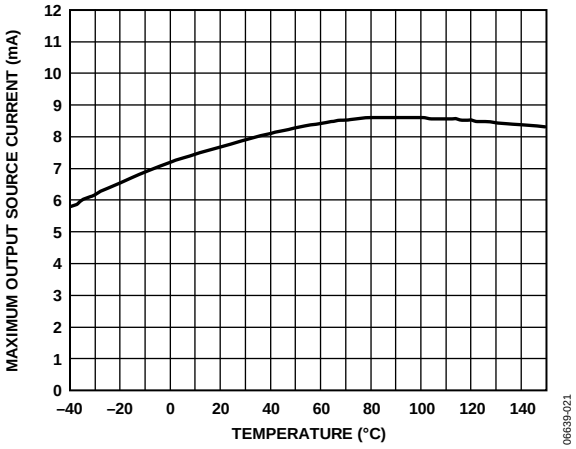

Figure 19. Output Source Current vs. Temperature (Per Channel)

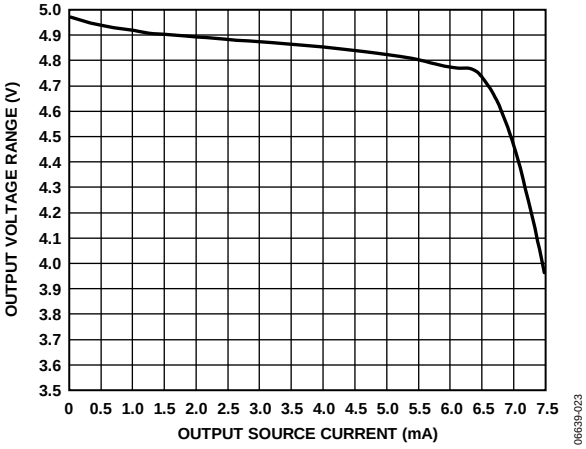

Figure 20. Output Voltage Range vs. Output Source Current (Per Channel)

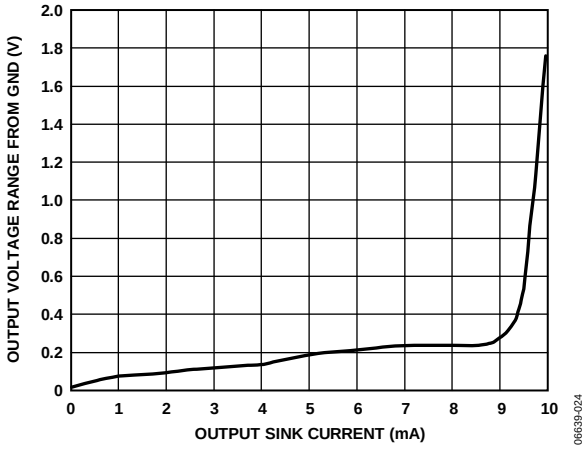

Figure 21. Output Voltage Range from GND vs. Output Sink Current (Per Channel)

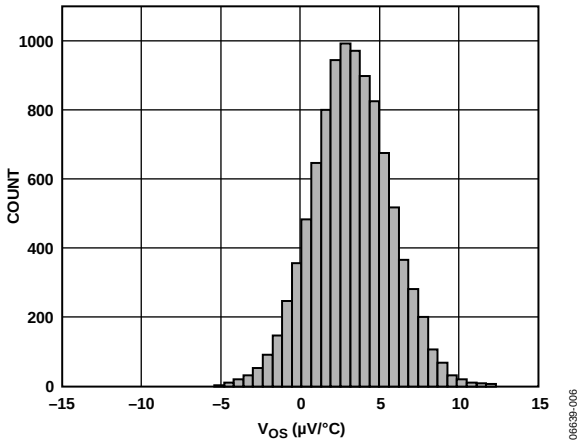

Figure 22. Offset Drift Distribution (µV/°C)
(Temperature Range = –40°C to +125°C)

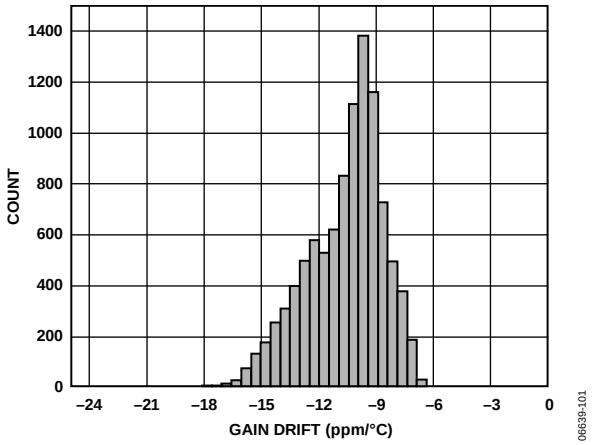

Figure 23. Gain Drift Distribution (ppm/°C)
(Temperature Range = –40°C to +125°C)

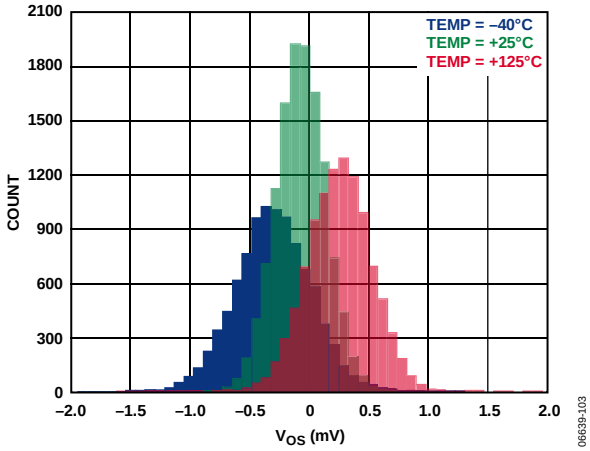

Figure 24. Offset Distribution (mV)
(V_{CM} = 6 V)

THEORY OF OPERATION

In typical applications, the AD8213 amplifies a small differential input voltage generated by the load current flowing through a shunt resistor. The AD8213 rejects high common-mode voltages (up to 65 V) and provides a ground referenced, buffered output that interfaces with an analog-to-digital converter (ADC). Figure 25 shows a simplified schematic of the AD8213.

The following explanation refers exclusively to Channel 1 of the AD8213, however, the same explanation applies to Channel 2.

A load current flowing through the external shunt resistor produces a voltage at the input terminals of the AD8213. The input terminals are connected to Amplifier A1 by Resistor $R1_{(1)}$ and Resistor $R1_{(2)}$. The inverting terminal, which has very high input impedance is held to (V_{CM}) – ($I_{SHUNT} \times R_{SHUNT}$), since negligible current flows through Resistor $R1_{(2)}$. Amplifier A1 forces the noninverting input to the same potential. Therefore, the current that flows through Resistor $R1_{(1)}$, is equal to

$$I_{IN1} = (I_{SHUNT1} \times R_{SHUNT1})/R1_{(1)}$$

This current (I_{IN1}) is converted back to a voltage via R_{OUT1}. The output buffer amplifier has a gain of 20 V/V, and offers excellent accuracy as the internal gain setting resistors are precision trimmed to within 0.01% matching. The resulting output voltage is equal to

$$V_{OUT1} = (I_{SHUNT1} \times R_{SHUNT1}) \times 20$$

Prior to the buffer amplifier, a precision-trimmed 20 kΩ resistor is available to perform low-pass filtering of the input signal prior to the amplification stage. This means that the noise of the input signal is not amplified, but rejected, resulting in a more precise output signal that will directly interface with a converter. A capacitor from the CF1 pin to GND, will result in a low-pass filter with a corner frequency of

$$f_{-3dB} = \frac{1}{2\pi(20000)C_{FILTER}}$$

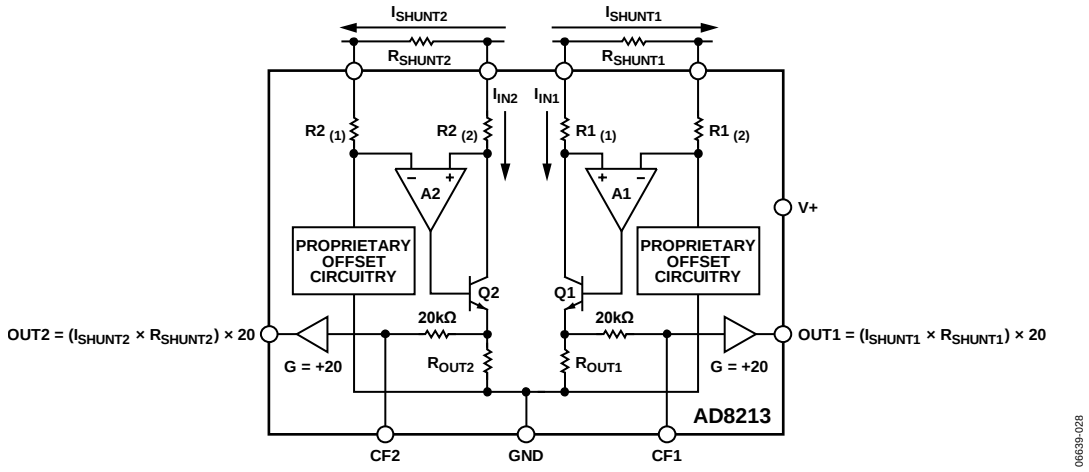

Figure 25. Simplified Schematic

APPLICATION NOTES

OUTPUT LINEARITY

In all current sensing applications, and especially in automotive and industrial environments where the common-mode voltage can vary significantly, it is important that the current sensor maintain the specified output linearity, regardless of the input differential or common-mode voltage. The AD8213 contains specific circuitry on the input stage, which ensures that even when the differential input voltage is very small, and the common-mode voltage is also low (below the 5 V supply), the input to output linearity is maintained. Figure 26 displays the input differential voltage versus the corresponding output voltage at different common modes.

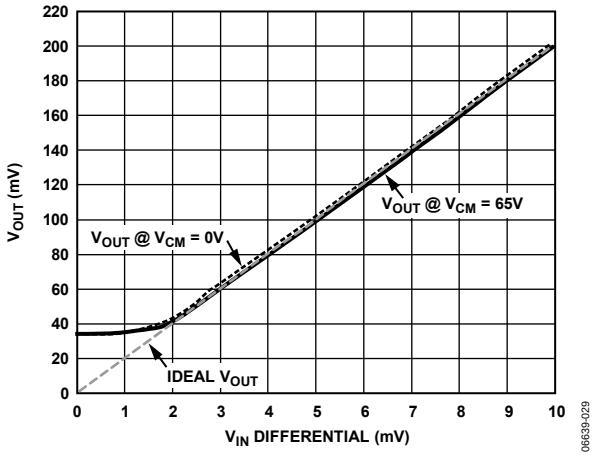

Figure 26. Gain Linearity Due to Differential and Common-Mode Voltage

The AD8213 provides a correct output voltage, regardless of the common mode, when the input differential is at least 2 mV. This is due to the voltage range of the output amplifier that can go as low as 33 mV typical. The specified minimum output amplifier voltage is 100 mV in order to provide sufficient guardbands. The ability of the AD8213 to work with very small differential inputs regardless of the common-mode voltage, allows for more dynamic range, accuracy, and flexibility in any current sensing application.

LOW-PASS FILTERING

In typical applications, such as motor and solenoid current sensing, filtering the differential input signal of the AD8213 could be beneficial in reducing differential common-mode noise as well as transients and current ripples flowing through the input shunt resistor. Typically, such a filter can be implemented by adding a resistor in series with each input and a capacitor directly between the input pins. However, the AD8213 features a filter pin available after the input stage, but before the final amplification stage. The user can connect a capacitor to ground, making a low-pass filter with the internal precision-trimmed 20 kΩ resistor. This means the no gain or CMRR errors are introduced by adding resistors at the input of the AD8213. Figure 27 shows the typical connection.

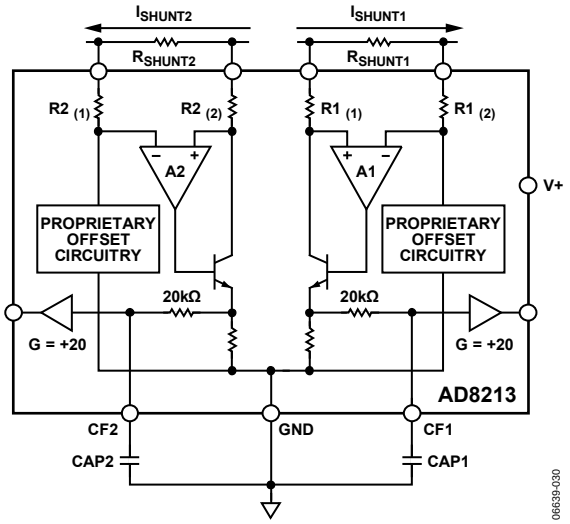

Figure 27. Filter Capacitor Connections

The 3 dB frequency of this low-pass filter is calculated using the following formula:

$$f_{-3dB} = \frac{1}{2\pi(20000)C_{FILTER}}$$

It is recommended that in order to prevent output chatter due to noise potentially entering through the filter pin and coupling to the output, a capacitor is always placed from the filter pin to GND. This can be a ≈20 pF capacitor in cases when all of the bandwidth of the AD8213 is needed in the application.

APPLICATIONS INFORMATION

HIGH-SIDE CURRENT SENSE WITH A LOW-SIDE SWITCH

In such load control configurations, the PWM controlled switch is ground referenced. An inductive load (solenoid) is tied to a power supply. A resistive shunt is placed between the switch and the load (see Figure 28). An advantage of placing the shunt on the high side is that the entire current, including the recirculation current, can be measured, because the shunt remains in the loop when the switch is off. In addition, diagnostics can be enhanced because shorts to ground can be detected with the shunt on the high side. In this circuit configuration, when the switch is closed, the common-mode voltage moves down to near the negative rail. When the switch is opened, the voltage reversal across the inductive load causes the common-mode voltage to be held one diode drop above the battery by the clamp diode.

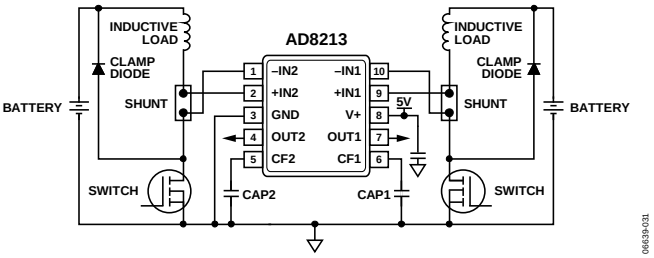

Figure 28. Low-Side Switch

HIGH-SIDE CURRENT SENSING

In this configuration, the shunt resistor is referenced to the battery. High voltage will be present at the inputs of the current sense amplifier. In this mode, the recirculation current is again measured and shorts to ground can be detected. When the shunt is battery referenced the AD8213 produces a linear ground referenced analog output. An AD8214 can also be used to provide an overcurrent detection signal in as little as 100 ns. This feature will be useful in high current systems, where fast shutdown in overcurrent conditions is essential.

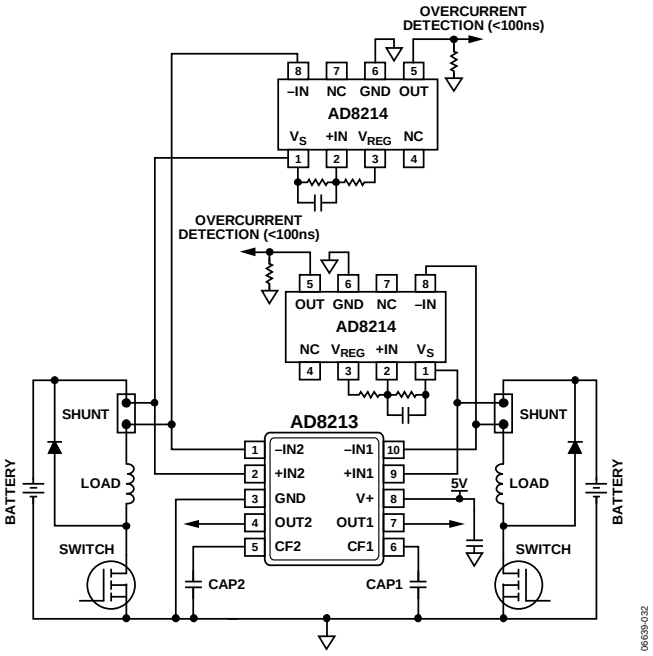

Figure 29. Battery Referenced Shunt Resistor

LOW-SIDE CURRENT SENSING

In systems where low-side current sensing is preferred, the AD8213 provides an integrated solution with great accuracy. Ground noise is rejected, CMRR is typical higher than 90 dB, and output linearity is not compromised, regardless of the input differential voltage.

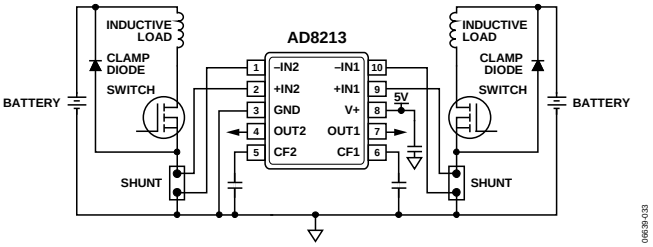

Figure 30. Ground Referenced Shunt Resistor

BIDIRECTIONAL CURRENT SENSING

The AD8213 can also be configured to sense current in both directions at the inputs. This configuration is useful in charge/discharge applications. A typical connection diagram is shown in Figure 31. In this mode Channel 1 monitors I_{LOAD} and Channel 2 monitors I_{CHARGE}.

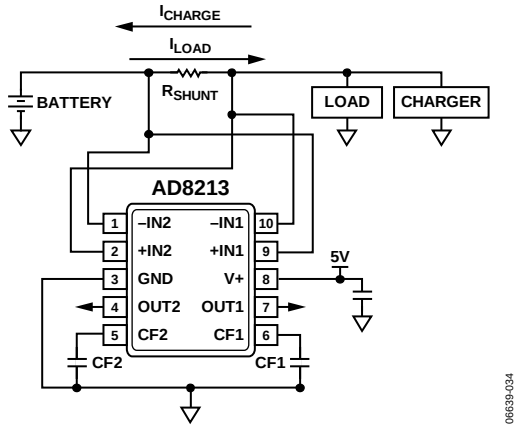

Figure 31. Bidirectional Current Sensing

For applications requiring a bidirectional current measurement, an optimal solution could be to use a single channel device, which offers the same functionality as the previous circuit. The AD8210 is a single channel current sensor featuring bidirectional capability. The typical connection diagram for the AD8210 in bidirectional applications is shown in Figure 32.

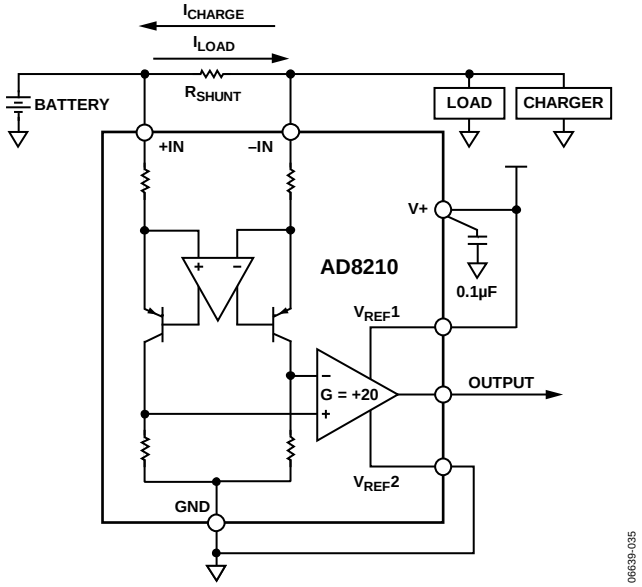

Figure 32. AD8210 in Bidirectional Applications

OUTLINE DIMENSIONS

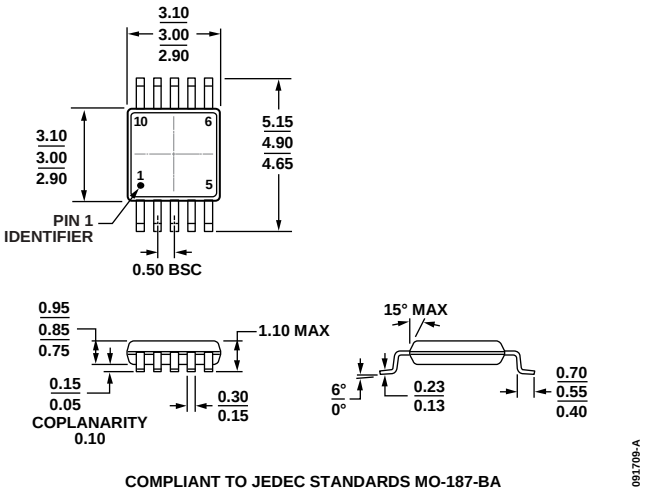

Figure 33. 10-Lead Mini Small Outline Package [MSOP] (RM-10)
Dimensions shown in millimeters

ORDERING GUIDE

Model[1]	Temperature Range	Package Description	Package Option	Branding
AD8213YRMZ	−40°C to +125°C	10-Lead MSOP	RM-10	H0U
AD8213YRMZ-RL	−40°C to +125°C	10-Lead MSOP, 13″ Tape and Reel	RM-10	H0U
AD8213YRMZ-R7	−40°C to +125°C	10-Lead MSOP, 7″ Tape and Reel	RM-10	H0U
AD8213WYRMZ	−40°C to +125°C	10-Lead MSOP	RM-10	Y2B
AD8213WYRMZ-RL	−40°C to +125°C	10-Lead MSOP, 13″ Tape and Reel	RM-10	Y2B
AD8213WYRMZ-R7	−40°C to +125°C	10-Lead MSOP, 7″ Tape and Reel	RM-10	Y2B
AD8213WHRMZ	−40°C to +150°C	10-Lead MSOP	RM-10	Y5C
AD8213WHRMZ-RL	−40°C to +150°C	10-Lead MSOP, 13″ Tape and Reel	RM-10	Y5C
AD8213WHRMZ-R7	−40°C to +150°C	10-Lead MSOP, 7″ Tape and Reel	RM-10	Y5C

[1] Z = RoHS Compliant Part.

NOTES

NOTES

©2007–2013 Analog Devices, Inc. All rights reserved. Trademarks and registered trademarks are the property of their respective owners.
D06639-0-10/13(C)

Компания «ЭлектроПласт» предлагает заключение долгосрочных отношений при поставках импортных электронных компонентов на взаимовыгодных условиях!

Наши преимущества:

- Оперативные поставки широкого спектра электронных компонентов отечественного и импортного производства напрямую от производителей и с крупнейших мировых складов;
- Поставка более 17-ти миллионов наименований электронных компонентов;
- Поставка сложных, дефицитных, либо снятых с производства позиций;
- Оперативные сроки поставки под заказ (от 5 рабочих дней);
- Экспресс доставка в любую точку России;
- Техническая поддержка проекта, помощь в подборе аналогов, поставка прототипов;
- Система менеджмента качества сертифицирована по Международному стандарту ISO 9001;
- Лицензия ФСБ на осуществление работ с использованием сведений, составляющих государственную тайну;
- Поставка специализированных компонентов (Xilinx, Altera, Analog Devices, Intersil, Interpoint, Microsemi, Aeroflex, Peregrine, Syfer, Eurofarad, Texas Instrument, Miteq, Cobham, E2V, MA-COM, Hittite, Mini-Circuits,General Dynamics и др.);

Помимо этого, одним из направлений компании «ЭлектроПласт» является направление «Источники питания». Мы предлагаем Вам помощь Конструкторского отдела:

- Подбор оптимального решения, техническое обоснование при выборе компонента;
- Подбор аналогов;
- Консультации по применению компонента;
- Поставка образцов и прототипов;
- Техническая поддержка проекта;
- Защита от снятия компонента с производства.

Как с нами связаться

Телефон: 8 (812) 309 58 32 (многоканальный)
Факс: 8 (812) 320-02-42
Электронная почта: org@eplast1.ru
Адрес: 198099, г. Санкт-Петербург, ул. Калинина, дом 2, корпус 4, литера А.