EPSON®

ENERGY SAVING EPSON

S1D13505 Embedded RAMDAC LCD/CRT Controller

S1D13505
TECHNICAL MANUAL

Document Number: X23A-Q-001-12

Copyright © 1998, 2001 Epson Research and Development, Inc. All Rights Reserved.

Information in this document is subject to change without notice. You may download and use this document, but only for your own use in evaluating Seiko Epson/EPSON products. You may not modify the document. Epson Research and Development, Inc. disclaims any representation that the contents of this document are accurate or current. The Programs/Technologies described in this document may contain material protected under U.S. and/or International Patent laws.
EPSON is a registered trademark of Seiko Epson Corporation. All other trademarks are the property of their respective owners.

Customer Support Information

Comprehensive Support Tools

Seiko Epson Corp. provides to the system designer and computer OEM manufacturer a complete set of resources and tools for the development of graphics systems.

Evaluation / Demonstration Board

- Assembled and fully tested graphics evaluation board with installation guide and schematics.
- To borrow an evaluation board, please contact your local Seiko Epson Corp. sales representative.

Chip Documentation

- Technical manual includes Data Sheet, Application Notes, and Programmer's Reference.

Software

- OEM Utilities.
- User Utilities.
- Evaluation Software.
- To obtain these programs, contact Application Engineering Support.

Application Engineering Support

Engineering and Sales Support is provided by:

Japan
Seiko Epson Corporation
Electronic Devices Marketing Division
421-8, Hino, Hino-shi
Tokyo 191-8501, Japan
Tel: 042-587-5812
Fax: 042-587-5564
http://www.epson.co.jp

Hong Kong
Epson Hong Kong Ltd.
20/F., Harbour Centre
25 Harbour Road
Wanchai, Hong Kong
Tel: 2585-4600
Fax: 2827-4346

North America
Epson Electronics America, Inc.
150 River Oaks Parkway
San Jose, CA 95134, USA
Tel: (408) 922-0200
Fax: (408) 922-0238
http://www.eea.epson.com

Europe
Epson Europe Electronics GmbH
Riesstrasse 15
80992 Munich, Germany
Tel: 089-14005-0
Fax: 089-14005-110

Taiwan
Epson Taiwan Technology
& Trading Ltd.
10F, No. 287
Nanking East Road
Sec. 3, Taipei, Taiwan
Tel: 02-2717-7360
Fax: 02-2712-9164

Singapore
Epson Singapore Pte., Ltd.
No. 1
Temasek Avenue #36-00
Millenia Tower
Singapore, 039192
Tel: 337-7911
Fax: 334-2716

THIS PAGE LEFT BLANK

S1D13505 EMBEDDED RAMDAC LCD/CRT CONTROLLER October 2001

■ DESCRIPTION

The S1D13505 is a color/monochrome LCD/CRT graphics controller interfacing to a wide range of CPUs and display devices. The S1D13505 architecture is designed to meet the low cost, low power requirements of the embedded markets, such as Mobile Communications, Hand-Held PCs, and Office Automation.

The S1D13505 supports multiple CPUs, all LCD panel types, CRT, and additionally provides a number of differentiating features. Products requiring a “Portrait” mode display can take advantage of the SwivelView feature. Simultaneous, Virtual and Split Screen Display are just some of the display modes supported, while the Hardware Cursor, Ink Layer, and the Memory Enhancement Registers offer substantial performance benefits. These features, combined with the S1D13505’s Operating System independence, make it an ideal display solution for a wide variety of applications.

■ FEATURES

Memory Interface

- 16-bit EDO-DRAM or FPM-DRAM interface.
- Memory size options:
  512K bytes using one 256K×16 device.
  2M bytes using one 1M×16 device.
- Addressable as a single linear address space.

CPU Interface

- Supports the following interfaces:
  Hitachi SH-4.
  Hitachi SH-3.
  Motorola M68K.
  Philips MIPS PR31500/PR31700.
  Toshiba MIPS TX3912.
  Motorola Power PC MPC821.
  NEC MIPS VR4102/VR4111.
  Epson E0C33.
  PC Card (PCMCIA).
  StrongARM (PC Card).
  ISA bus.
  MPU bus interface with programmable READY.
- CPU write buffer.

Display Support

- 4/8-bit monochrome passive LCD interface.
- 4/8/16-bit color passive LCD interface.
- Single-panel, single-drive displays.
- Dual-panel, dual-drive displays.
- Direct support for 9/12-bit TFT/D-TFD; 18-bit TFT/D-TFD is supported up to 64K color depth (16-bit data).
- Embedded RAMDAC with direct analog CRT drive.
- Simultaneous display of CRT and passive or TFT/D-TFD panels.
- Maximum resolution of 800x600 pixels at a color depth of 16 bpp.

Display Modes

- 1/2/4/8/16 bit-per-pixel (bpp) support on LCD/CRT.
- Up to 16 shades of gray using FRM on monochrome passive LCD panels.
- Up to 4096 colors on passive LCD panels.
- Up to 64K colors on active matrix TFT/D-TFD LCD panels and CRT in 16 bpp modes.
- Split Screen Display: allows two different images to be simultaneously viewed on the same display.
- Virtual Display Support: displays images larger than the display size through the use of panning.
- Double Buffering/multi-pages: provides smooth animation and instantaneous screen update.
- SwivelView: direct hardware 90° rotation of display image for portrait mode display.
- Acceleration of screen updates by allocating full display memory bandwidth to CPU.
- Hardware 64x64 pixel 2-bit cursor or full screen 2-bit ink layer.

Clock Source

- Single clock input for both pixel and memory clocks.
- Memory clock can be input clock or (input clock/2), providing flexibility to use CPU bus clock as input.
- Pixel clock can be memory clock or (memory clock/2) or (memory clock/3) or (memory clock/4).

Power Down Modes

- Software power save mode.
- LCD power sequencing.

General Purpose IO Pins

- Up to 3 General Purpose IO pins are available.

Operating Voltage

- 2.7 volts to 5.5 volts.

Package

- 128-pin QFP15 surface mount package.

SYSTEM BLOCK DIAGRAM

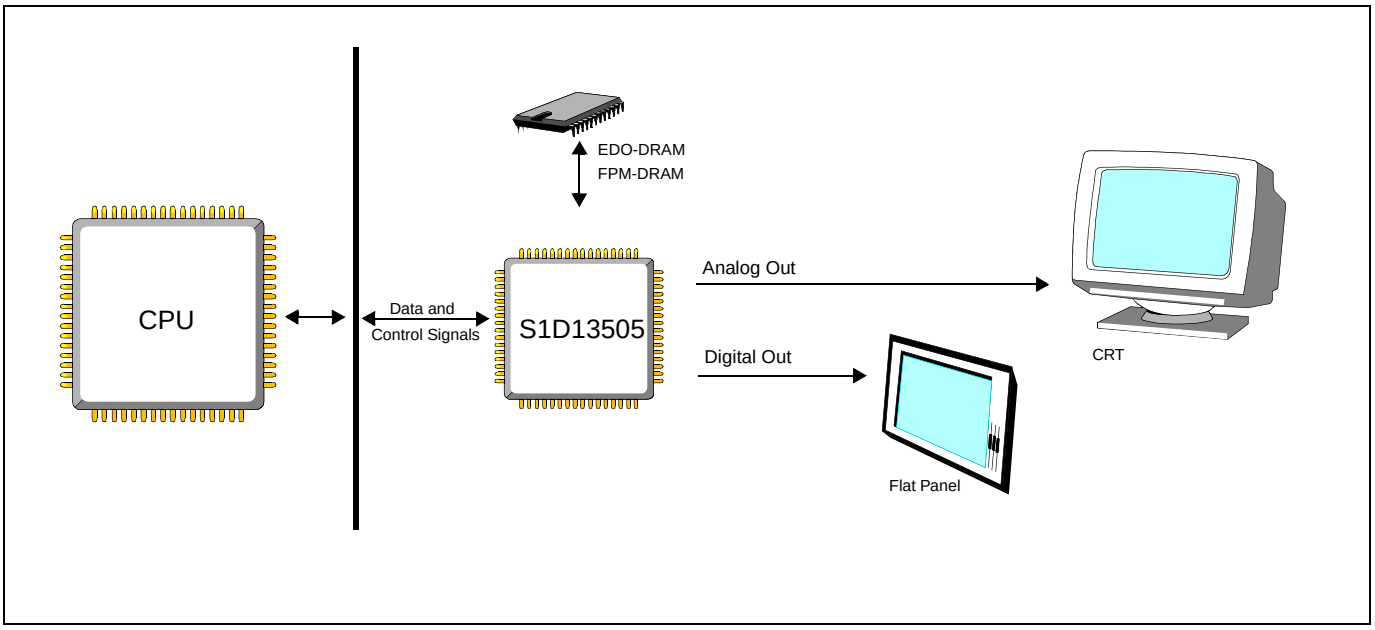

CONTACT YOUR SALES REPRESENTATIVE FOR THESE COMPREHENSIVE DESIGN TOOLS

- S1D13505 Technical Manual
- S5U13505 Evaluation Boards
- CPU Independent Software Utilities
- Linux Console Driver
- Windows® CE Display Driver
- VXWorks® Tornado™ Display Driver

Japan
Seiko Epson Corporation
Electronic Devices Marketing Division
421-8, Hino, Hino-shi
Tokyo 191-8501, Japan
Tel: 042-587-5812
Fax: 042-587-5564
http://www.epson.co.jp/

Hong Kong
Epson Hong Kong Ltd.
20/F., Harbour Centre
25 Harbour Road
Wanchai, Hong Kong
Tel: 2585-4600
Fax: 2827-4346
http://www.epson.com.hk/

North America
Epson Electronics America, Inc.
150 River Oaks Parkway
San Jose, CA 95134, USA
Tel: (408) 922-0200
Fax: (408) 922-0238
http://www.eea.epson.com/

Europe
Epson Europe Electronics GmbH
Riesstrasse 15
80992 Munich, Germany
Tel: 089-14005-0
Fax: 089-14005-110
http://www.epson-electronics.de/

Taiwan
Epson Taiwan Technology & Trading Ltd.
10F, No. 287
Nanking East Road
Sec. 3, Taipei, Taiwan
Tel: 02-2717-7360
Fax: 02-2712-9164
http://www.epson.com.tw/

Singapore
Epson Singapore Pte., Ltd.
No. 1
Temasek Avenue #36-00
Millenia Tower
Singapore, 039192
Tel: 337-7911
Fax: 334-2716
http://www.epson.com.sg/

Copyright © 2001 Epson Research and Development, Inc. All Rights Reserved.
Information in this document is subject to change without notice. You may download and use this document, but only for your own use in evaluating Seiko Epson/EPSON products. You may not modify the document. Epson Research and Development, Inc. disclaims any representation that the contents of this document are accurate or current. The Programs/Technologies described in this document may contain material protected under U.S. and/or International Patent laws.
EPSON is a registered trademark of Seiko Epson Corporation. Microsoft, Windows, and the Windows Embedded Partner Logo are registered trademarks of Microsoft Corporation. All other trademarks are the property of their respective owners.

S1D13505 Embedded RAMDAC LCD/CRT Controller

Hardware Functional Specification

Document Number: X23A-A-001-14

Copyright © 1998, 2001 Epson Research and Development, Inc. All Rights Reserved.

Information in this document is subject to change without notice. You may download and use this document, but only for your own use in evaluating Seiko Epson/EPSON products. You may not modify the document. Epson Research and Development, Inc. disclaims any representation that the contents of this document are accurate or current. The Programs/Technologies described in this document may contain material protected under U.S. and/or International Patent laws.

EPSON is a registered trademark of Seiko Epson Corporation. All other trademarks are the property of their respective owners.

THIS PAGE LEFT BLANK

Table of Contents

1 Introduction . . . 11
1.1 Scope . . . 11
1.2 Overview Description . . . 11
2 Features . . . 12
2.1 Memory Interface . . . 12
2.2 CPU Interface . . . 12
2.3 Display Support . . . 13
2.4 Display Modes . . . 13
2.5 Display Features . . . 13
2.6 Clock Source . . . 13
2.7 Miscellaneous . . . 14
3 Typical System Implementation Diagrams . . . 15
4 Internal Description . . . 20
4.1 Block Diagram Showing Datapaths . . . 20
4.2 Block Descriptions . . . 20
4.2.1 Register . . . 20
4.2.2 Host Interface . . . 20
4.2.3 CPU R/W . . . 20
4.2.4 Memory Controller . . . 21
4.2.5 Display FIFO . . . 21
4.2.6 Cursor FIFO . . . 21
4.2.7 Look-Up Tables . . . 21
4.2.8 CRTC . . . 21
4.2.9 LCD Interface . . . 21
4.2.10 DAC . . . 21
4.2.11 Power Save . . . 21
4.2.12 Clocks . . . 21
5 Pins . . . 22
5.1 Pinout Diagram . . . 22
5.2 Pin Description . . . 23
5.2.1 Host Interface . . . 23
5.2.2 Memory Interface . . . 29
5.2.3 LCD Interface . . . 31
5.2.4 CRT Interface . . . 31
5.2.5 Miscellaneous . . . 32
5.3 Summary of Configuration Options . . . 33
5.4 Multiple Function Pin Mapping . . . 34
5.5 CRT Interface . . . 37
6 D.C. Characteristics . . . 38

7 A.C. Characteristics 42
7.1 CPU Interface Timing 42
7.1.1 SH-4 Interface Timing 42
7.1.2 SH-3 Interface Timing 44
7.1.3 MC68K Bus 1 Interface Timing (e.g. MC68000) 46
7.1.4 MC68K Bus 2 Interface Timing (e.g. MC68030) 48
7.1.5 PC Card Interface Timing 50
7.1.6 Generic Interface Timing 52
7.1.7 MIPS/ISA Interface Timing 54
7.1.8 Philips Interface Timing (e.g. PR31500/PR31700) 56
7.1.9 Toshiba Interface Timing (e.g. TX3912) 58
7.1.10 Power PC Interface Timing (e.g. MPC8xx, MC68040, Coldfire) 60
7.2 Clock Input Requirements 62
7.3 Memory Interface Timing 63
7.3.1 EDO-DRAM Read/Write/Read-Write Timing 63
7.3.2 EDO-DRAM CAS Before RAS Refresh Timing 66
7.3.3 EDO-DRAM Self-Refresh Timing 68
7.3.4 FPM-DRAM Read/Write/Read-Write Timing 69
7.3.5 FPM-DRAM CAS Before RAS Refresh Timing 72
7.3.6 FPM-DRAM Self-Refresh Timing 73
7.4 Power Sequencing 74
7.4.1 LCD Power Sequencing 74
7.4.2 Power Save Status 75
7.5 Display Interface 76
7.5.1 4-Bit Single Monochrome Passive LCD Panel Timing 76
7.5.2 8-Bit Single Monochrome Passive LCD Panel Timing 78
7.5.3 4-Bit Single Color Passive LCD Panel Timing 80
7.5.4 8-Bit Single Color Passive LCD Panel Timing (Format 1) 82
7.5.5 8-Bit Single Color Passive LCD Panel Timing (Format 2) 84
7.5.6 16-Bit Single Color Passive LCD Panel Timing 86
7.5.7 8-Bit Dual Monochrome Passive LCD Panel Timing 88
7.5.8 8-Bit Dual Color Passive LCD Panel Timing 90
7.5.9 16-Bit Dual Color Passive LCD Panel Timing 92
7.5.10 16-Bit TFT/D-TFD Panel Timing 94
7.5.11 CRT Timing 97
8 Registers 99
8.1 Register Mapping 99
8.2 Register Descriptions 99
8.2.1 Revision Code Register 99
8.2.2 Memory Configuration Registers 100
8.2.3 Panel/Monitor Configuration Registers 101
8.2.4 Display Configuration Registers 106

8.2.5 Clock Configuration Register 110
8.2.6 Power Save Configuration Registers 110
8.2.7 Miscellaneous Registers 111
8.2.8 Look-Up Table Registers 117
8.2.9 Ink/Cursor Registers 118

9 Display Buffer 122
9.1 Image Buffer 123
9.2 Ink/Cursor Buffers 123
9.3 Half Frame Buffer 123

10 Display Configuration 124
10.1 Display Mode Data Format 124
10.2 Image Manipulation 126

11 Look-Up Table Architecture 127
11.1 Monochrome Modes 127
11.2 Color Modes 129

12 Ink/Cursor Architecture 133
12.1 Ink/Cursor Buffers 133
12.2 Ink/Cursor Data Format 133
12.3 Ink/Cursor Image Manipulation 134
12.3.1 Ink Image 134
12.3.2 Cursor Image 134

13 SwivelView™ 135
13.1 Concept 135
13.2 Image Manipulation in SwivelView 136
13.3 Physical Memory Requirement 137
13.4 Limitations 138

14 Clocking 139
14.1 Maximum MCLK: PCLK Ratios 139
14.2 Frame Rate Calculation 141
14.3 Bandwidth Calculation 143

15 Power Save Modes 147

16 Mechanical Data 148

THIS PAGE LEFT BLANK

List of Tables

Table 5-1: Host Interface Pin Descriptions . . . 23
Table 5-2: Memory Interface Pin Descriptions . . . 29
Table 5-2: LCD Interface Pin Descriptions . . . 31
Table 5-3: CRT Interface Pin Descriptions . . . 31
Table 5-4: Miscellaneous Interface Pin Descriptions . . . 32
Table 5-5: Summary of Power On/Reset Options . . . 33
Table 5-6: CPU Interface Pin Mapping . . . 34
Table 5-7: Memory Interface Pin Mapping . . . 35
Table 5-8: LCD Interface Pin Mapping . . . 36
Table 6-1: Absolute Maximum Ratings . . . 38
Table 6-2: Recommended Operating Conditions . . . 38
Table 6-3: Electrical Characteristics for VDD = 5.0V typical . . . 39
Table 6-4: Electrical Characteristics for VDD = 3.3V typical . . . 40
Table 6-5: Electrical Characteristics for VDD = 3.0V typical . . . 41
Table 7-1: SH-4 Timing . . . 43
Table 7-2: SH-3 Timing . . . 45
Table 7-3: MC68000 Timing . . . 47
Table 7-4: MC68030 Timing . . . 49
Table 7-5: PC Card Timing . . . 51
Table 7-6: Generic Timing . . . 53
Table 7-7: MIPS/ISA Timing . . . 55
Table 7-8: Philips Timing . . . 57
Table 7-9: Clock Input Requirements for BUSCLK using Philips local bus . . . 57
Table 7-10: Toshiba Timing . . . 59
Table 7-11: Clock Input Requirements for BUSCLK using Toshiba local bus . . . 59
Table 7-12: Power PC Timing . . . 61
Table 7-13: Clock Input Requirements for CLKI divided down internally (MCLK = CLKI/2) . . . 62
Table 7-14: Clock Input Requirements for CLKI . . . 62
Table 7-15: EDO-DRAM Read/Write/Read-Write Timing . . . 64
Table 7-16: EDO-DRAM CAS Before RAS Refresh Timing . . . 66
Table 7-17: EDO-DRAM Self-Refresh Timing . . . 68
Table 7-18: FPM-DRAM Read/Write/Read-Write Timing . . . 70
Table 7-19: FPM-DRAM CAS Before RAS Refresh Timing . . . 72
Table 7-20: FPM-DRAM CBR Self-Refresh Timing . . . 73
Table 7-21: LCD Panel Power Off/ Power On . . . 74
Table 7-22: Power Save Status and Local Bus Memory Access Relative to Power Save Mode . . . 75
Table 7-23: 4-Bit Single Monochrome Passive LCD Panel A.C. Timing . . . 77
Table 7-24: 8-Bit Single Monochrome Passive LCD Panel A.C. Timing . . . 79
Table 7-25: 4-Bit Single Color Passive LCD Panel A.C. Timing . . . 81
Table 7-26: 8-Bit Single Color Passive LCD Panel A.C. Timing (Format 1) . . . 83

Table 7-27: 8-Bit Single Color Passive LCD Panel A.C. Timing (Format 2) 85
Table 7-28: 16-Bit Single Color Passive LCD Panel A.C. Timing. 87
Table 7-29: 8-Bit Dual Monochrome Passive LCD Panel A.C. Timing 89
Table 7-30: 8-Bit Dual Color Passive LCD Panel A.C. Timing 91
Table 7-31: 16-Bit Dual Color Passive LCD Panel A.C. Timing 93
Table 7-32: TFT/D-TFD A.C. Timing 96
Table 8-1: S1D13505 Addressing 99
Table 8-2: DRAM Refresh Rate Selection 100
Table 8-3: Panel Data Width Selection 101
Table 8-4: FPLINE Polarity Selection 103
Table 8-5: FPFRAME Polarity Selection 105
Table 8-6: Simultaneous Display Option Selection 106
Table 8-7: Bit-per-pixel Selection 107
Table 8-8: Pixel Panning Selection 109
Table 8-9: PCLK Divide Selection 110
Table 8-10: Suspend Refresh Selection. 111
Table 8-11: MA/GPIO Pin Functionality 112
Table 8-12: Minimum Memory Timing Selection 114
Table 8-13: RAS#-to-CAS# Delay Timing Select 115
Table 8-14: RAS Precharge Timing Select 116
Table 8-15: Optimal NRC, NRP, and NRCD values at maximum MCLK frequency 116
Table 8-16: Minimum Memory Timing Selection 117
Table 8-17: Ink/Cursor Selection 118
Table 8-18: Ink/Cursor Start Address Encoding 120
Table 8-19: Recommended Alternate FRM Scheme 121
Table 9-1: S1D13505 Addressing 122
Table 12-1: Ink/Cursor Start Address Encoding 133
Table 12-2: Ink/Cursor Color Select 134
Table 13-2 Minimum DRAM Size Required for SwivelView. 138
Table 14-1: Maximum PCLK Frequency with EDO-DRAM 139
Table 14-2: Maximum PCLK Frequency with FPM-DRAM 140
Table 14-3: Example Frame Rates with Ink Disabled 141
Table 14-4: Number of MCLKs required for various memory access 143
Table 14-5: Total # MCLKs taken for Display refresh 144
Table 14-6: Theoretical Maximum Bandwidth M byte/sec, Cursor/Ink disabled 145
Table 15-1: Power Save Mode Function Summary 147
Table 15-2: Pin States in Power-save Modes 147

List of Figures

Figure 3-1: Typical System Diagram (SH-4 Bus) . . . 15
Figure 3-2: Typical System Diagram (SH-3 Bus) . . . 15
Figure 3-3: Typical System Diagram (MC68K Bus 1, 16-Bit 68000) . . . 16
Figure 3-4: Typical System Diagram (MC68K Bus 2, 32-Bit 68030) . . . 16
Figure 3-5: Typical System Diagram (Generic Bus) . . . 17
Figure 3-6: Typical System Diagram (NEC VR41xx (MIPS) Bus) . . . 17
Figure 3-7: Typical System Diagram (Philips PR31500/PR31700 Bus) . . . 18
Figure 3-8: Typical System Diagram (Toshiba TX3912 Bus) . . . 18
Figure 3-9: Typical System Diagram (Power PC Bus) . . . 19
Figure 3-10: Typical System Diagram (PC Card (PCMCIA) Bus) . . . 19
Figure 5-1: Pinout Diagram. . . . 22
Figure 5-3: External Circuitry for CRT Interface . . . 37
Figure 7-1: SH-4 Timing . . . 42
Figure 7-2: SH-3 Timing . . . 44
Figure 7-3: MC68000 Timing . . . 46
Figure 7-4: MC68030 Timing . . . 48
Figure 7-5: PC Card Timing . . . 50
Figure 7-6: Generic Timing. . . . 52
Figure 7-7: MIPS/ISA Timing . . . 54
Figure 7-8: Philips Timing . . . 56
Figure 7-9: Clock Input Requirement . . . 57
Figure 7-10: Toshiba Timing . . . 58
Figure 7-11: Clock Input Requirement . . . 59
Figure 7-12: Power PC Timing . . . 60
Figure 7-13: Clock Input Requirement . . . 62
Figure 7-14: EDO-DRAM Read/Write Timing . . . 63
Figure 7-15: EDO-DRAM Read-Write Timing . . . 64
Figure 7-16: EDO-DRAM CAS Before RAS Refresh Timing . . . 66
Figure 7-17: EDO-DRAM Self-Refresh Timing . . . 68
Figure 7-18: FPM-DRAM Read/Write Timing . . . 69
Figure 7-19: FPM-DRAM Read-Write Timing . . . 70
Figure 7-20: FPM-DRAM CAS Before RAS Refresh Timing . . . 72
Figure 7-21: FPM-DRAM Self-Refresh Timing. . . . 73
Figure 7-22: LCD Panel Power Off / Power On Timing. Drawn with LCDPWR set to active high polarity . . 74
Figure 7-23: Power Save Status and Local Bus Memory Access Relative to Power Save Mode . . . 75
Figure 7-24: 4-Bit Single Monochrome Passive LCD Panel Timing . . . 76
Figure 7-25: 4-Bit Single Monochrome Passive LCD Panel A.C. Timing . . . 77
Figure 7-26: 8-Bit Single Monochrome Passive LCD Panel Timing . . . 78
Figure 7-27: 8-Bit Single Monochrome Passive LCD Panel A.C. Timing . . . 79
Figure 7-28: 4-Bit Single Color Passive LCD Panel Timing . . . 80
Figure 7-29: 4-Bit Single Color Passive LCD Panel A.C. Timing . . . 81

Figure 7-30: 8-Bit Single Color Passive LCD Panel Timing (Format 1) 82
Figure 7-31: 8-Bit Single Color Passive LCD Panel A.C. Timing (Format 1) 83
Figure 7-32: 8-Bit Single Color Passive LCD Panel Timing (Format 2) 84
Figure 7-33: 8-Bit Single Color Passive LCD Panel A.C. Timing (Format 2) 85
Figure 7-34: 16-Bit Single Color Passive LCD Panel Timing 86
Figure 7-35: 16-Bit Single Color Passive LCD Panel A.C. Timing 87
Figure 7-36: 8-Bit Dual Monochrome Passive LCD Panel Timing 88
Figure 7-37: 8-Bit Dual Monochrome Passive LCD Panel A.C. Timing 89
Figure 7-38: 8-Bit Dual Color Passive LCD Panel Timing 90
Figure 7-39: 8-Bit Dual Color Passive LCD Panel A.C. Timing 91
Figure 7-40: 16-Bit Dual Color Passive LCD Panel Timing 92
Figure 7-41: 16-Bit Dual Color Passive LCD Panel A.C. Timing 93
Figure 7-42: 16-Bit TFT/D-TFD Panel Timing 94
Figure 7-43: TFT/D-TFD A.C. Timing 95
Figure 7-44: CRT Timing 97
Figure 7-45: CRT A.C. Timing 98
Figure 9-1: Display Buffer Addressing 122
Figure 10-1: 1/2/4/8 Bit-per-pixel Format Memory Organization 124
Figure 10-2: 15/16 Bit-per-pixel Format Memory Organization 125
Figure 10-3: Image Manipulation 126
Figure 11-1: 1 Bit-per-pixel Monochrome Mode Data Output Path 127
Figure 11-2: 2 Bit-per-pixel Monochrome Mode Data Output Path 127
Figure 11-3: 4 Bit-per-pixel Monochrome Mode Data Output Path 128
Figure 11-4: 1 Bit-per-pixel Color Mode Data Output Path 129
Figure 11-5: 2 Bit-per-pixel Color Mode Data Output Path 130
Figure 11-6: 4 Bit-per-pixel Color Mode Data Output Path 131
Figure 11-7: 8 Bit-per-pixel Color Mode Data Output Path 132
Figure 12-1: Ink/Cursor Data Format 133
Figure 12-2: Cursor Positioning 134
Figure 13-1: Relationship Between The Screen Image and the Image Residing in the Display Buffer 135
Figure 16-1: Mechanical Drawing QFP15 148

1 Introduction

1.1 Scope

This is the Hardware Functional Specification for the S1D13505 Embedded RAMDAC LCD/CRT Controller. Included in this document are timing diagrams, AC and DC characteristics, register descriptions, and power management descriptions. This document is intended for two audiences: Video Subsystem Designers and Software Developers.

This specification will be updated as appropriate. Please check the Epson Electronics America Website at http://www.eea.epson.com or the Epson Research and Development website at http://www.erd.epson.com for the latest revision of this document before beginning any development.

We appreciate your comments on our documentation. Please contact us via email at documentation@erd.epson.com.

1.2 Overview Description

The S1D13505 is a color/monochrome LCD/CRT graphics controller interfacing to a wide range of CPUs and display devices. The S1D13505 architecture is designed to meet the low cost, low power requirements of the embedded markets, such as Mobile Communications, Hand-Held PCs, and Office Automation.

The S1D13505 supports multiple CPUs, all LCD panel types, CRT, and additionally provides a number of differentiating features. Products requiring a “Portrait” mode display can take advantage of the SwivelView™ feature. Simultaneous, Virtual and Split Screen Display are just some of the display modes supported, while the Hardware Cursor, Ink Layer, and the Memory Enhancement Registers offer substantial performance benefits. These features, combined with the S1D13505’s Operating System independence, make it an ideal display solution for a wide variety of applications.

2 Features

2.1 Memory Interface

- 16-bit DRAM interface:
  - EDO-DRAM up to 40MHz data rate (80M bytes/sec.).
  - FPM-DRAM up to 25MHz data rate (50M bytes/sec.).
- Memory size options:
  - 512K bytes using one 256K×16 device.
  - 2M bytes using one 1M×16 device.
- Performance Enhancement Register to tailor the memory control output timing for the DRAM device.

2.2 CPU Interface

- Supports the following interfaces:
  - 8/16-bit SH-4 bus interface.
  - 8/16-bit SH-3 bus interface.
  - 8/16-bit interface to 8/16/32-bit MC68000 microprocessors/microcontrollers.
  - 8/16-bit interface to 8/16/32-bit MC68030 microprocessors/microcontrollers.
  - Philips PR31500/PR31700 (MIPS).
  - Toshiba TX3912 (MIPS)
  - 16-bit Power PC (MPC821) microprocessor.
  - 16-bit Epson E0C33 microprocessor.
  - PC Card (PCMCIA).
  - StrongARM (PC Card).
  - NEC VR41xx (MIPS).
  - ISA bus.
- Supports the following interface with external logic:
  - GX486 microprocessor.
- One-stage write buffer for minimum wait-state CPU writes.
- Registers are memory-mapped – the M/R# pin selects between the display buffer and register address space.
- The complete 2M byte display buffer address space is addressable as a single linear address space through the 21-bit address bus.

2.3 Display Support

- 4/8-bit monochrome passive LCD interface.
- 4/8/16-bit color passive LCD interface.
- Single-panel, single-drive displays.
- Dual-panel, dual-drive displays.
- Direct support for 9/12-bit TFT/D-TFD; 18-bit TFT/D-TFD is supported up to 64K color depth (16-bit data).
- Embedded RAMDAC (DAC)with direct analog CRT drive.
- Simultaneous display of CRT and passive or TFT/D-TFD panels.

2.4 Display Modes

- 1/2/4/8/15/16 bit-per-pixel (bpp) support on LCD/CRT.
- Up to 16 shades of gray using FRM on monochrome passive LCD panels.
- Up to 4096 colors on passive LCD panels; three 256x4 Look-Up Tables (LUT) are used to map 1/2/4/8 bpp modes into these colors, 15/16 bpp modes are mapped directly using the 4 most significant bits of the red, green and blue colors.
- Up to 64K colors on TFT/D-TFD LCD panels and CRT; three 256x4 Look-Up Tables are used to map 1/2/4/8 bpp modes into 4096 colors, 15/16 bpp modes are mapped directly.

2.5 Display Features

- SwivelView™: direct hardware 90° rotation of display image for “portrait” mode display.
- Split Screen Display: allows two different images to be simultaneously viewed on the same display.
- Virtual Display Support: displays images larger than the display size through the use of panning.
- Double Buffering/multi-pages: provides smooth animation and instantaneous screen update.
- Acceleration of screen updates by allocating full display memory bandwidth to CPU (see REG[23h] bit 7).
- Hardware 64x64 pixel 2-bit cursor or full screen 2-bit ink layer.
- Simultaneous display of CRT and passive panel or TFT/D-TFD panel.
  - Normal mode for cases where LCD and CRT screen sizes are identical.
  - Line-doubling for simultaneous display of 240-line images on 240-line LCD and 480-line CRT.
  - Even-scan or interlace modes for simultaneous display of 480-line images on 240-line LCD and 480-line CRT.

2.6 Clock Source

- Single clock input for both the pixel and memory clocks.
- Memory clock can be input clock or (input clock/2), providing flexibility to use CPU bus clock as input.
- Pixel clock can be the memory clock, (memory clock/2), (memory clock/3) or (memory clock/4).

2.7 Miscellaneous

- The memory data bus, MD[15:0], is used to configure the chip at power-on.
- Three General Purpose Input/Output pins, GPIO[3:1], are available if the upper Memory Address pins are not required for asymmetric DRAM support.
- Suspend power save mode can be initiated by either hardware or software.
- The SUSPEND# pin is used either as an input to initiate Suspend mode, or as a General Purpose Output that can be used to control the LCD backlight. Power-on polarity is selected by an MD configuration pin.
- Operating voltages from 2.7 volts to 5.5 volts are supported
- 128-pin QFP15 surface mount package

3 Typical System Implementation Diagrams

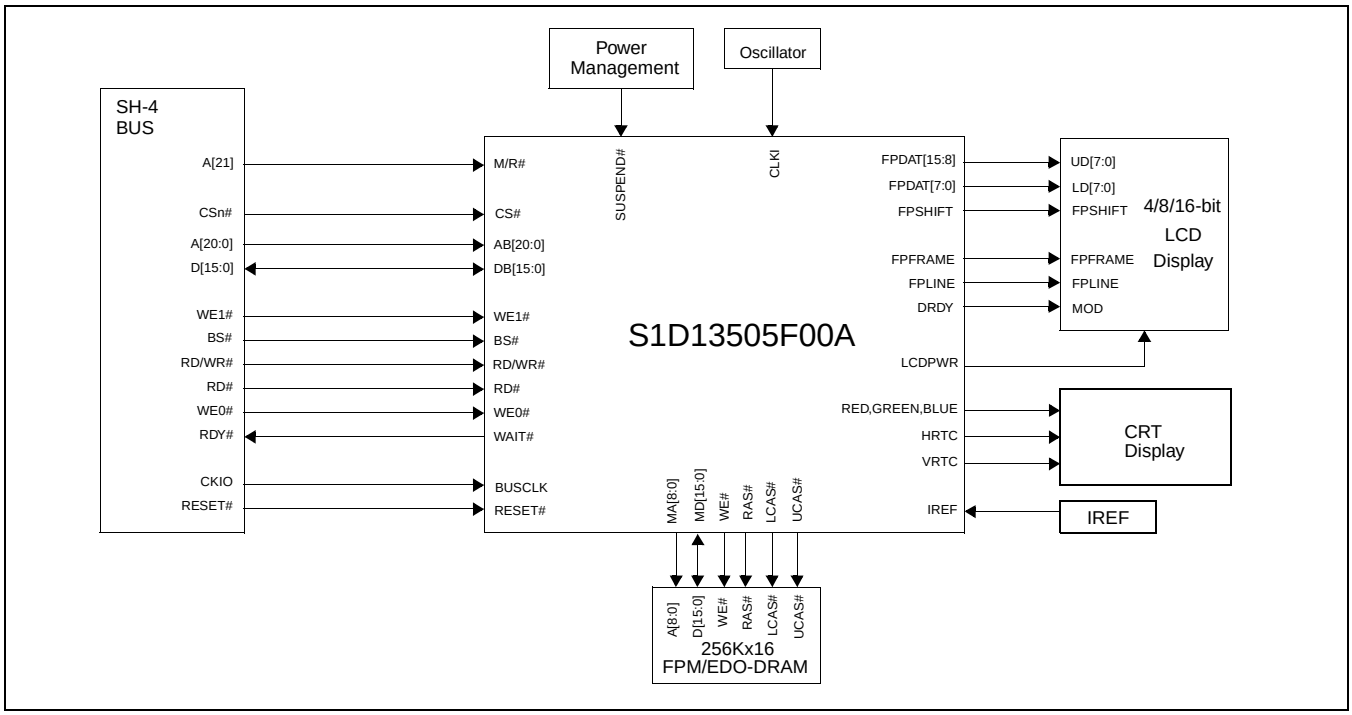

Figure 3-1: Typical System Diagram (SH-4 Bus)

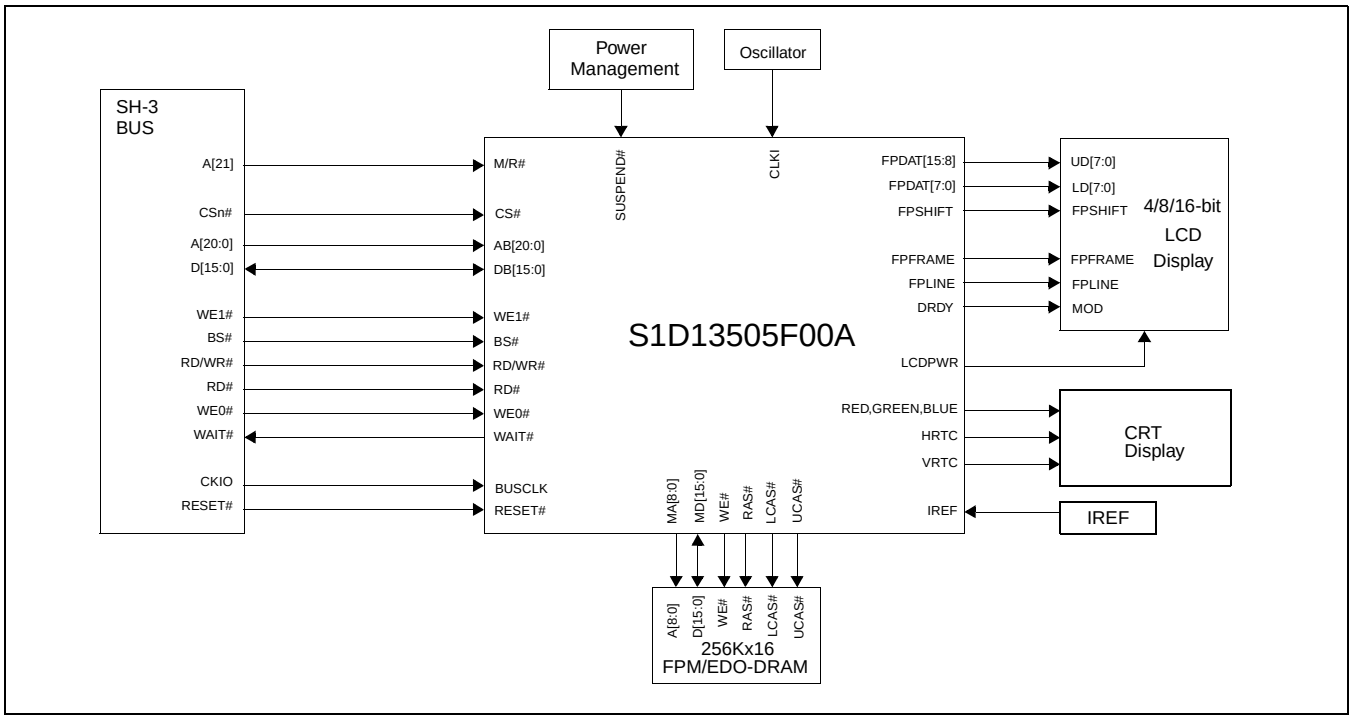

Figure 3-2: Typical System Diagram (SH-3 Bus)

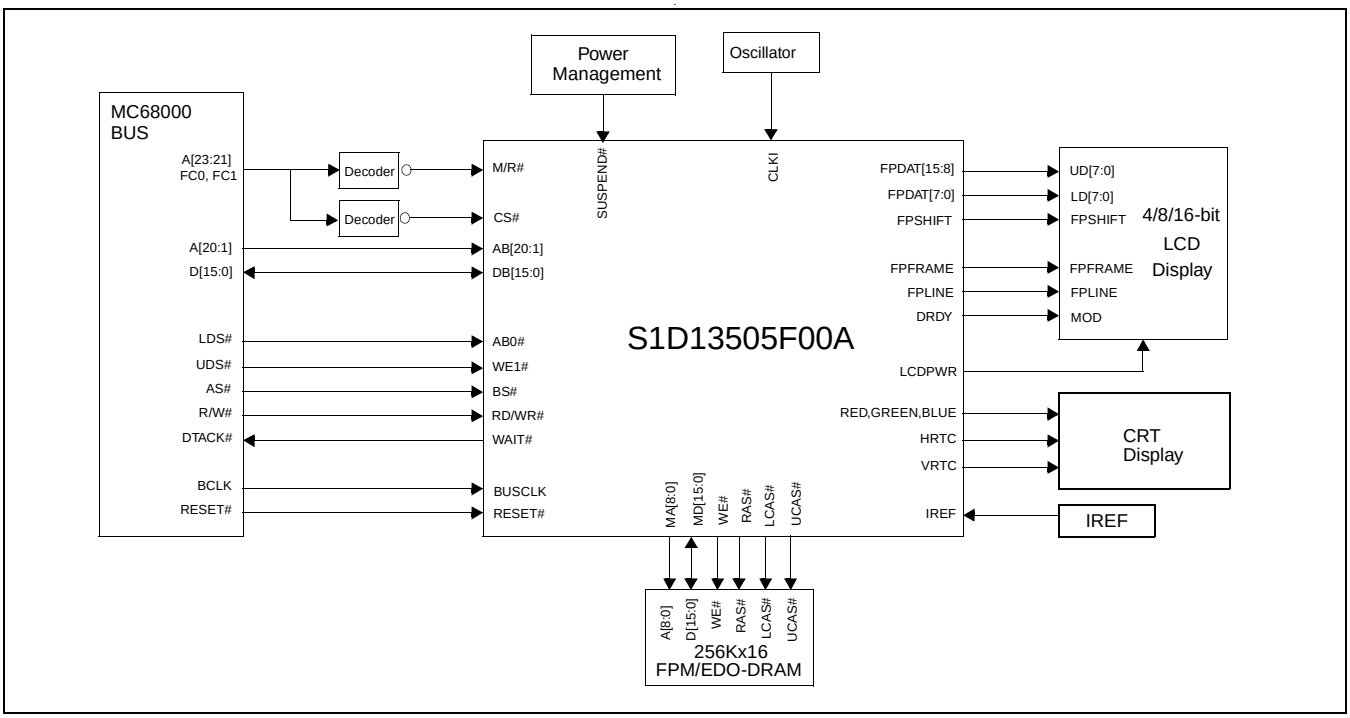

Figure 3-3: Typical System Diagram (MC68K Bus 1, 16-Bit 68000)

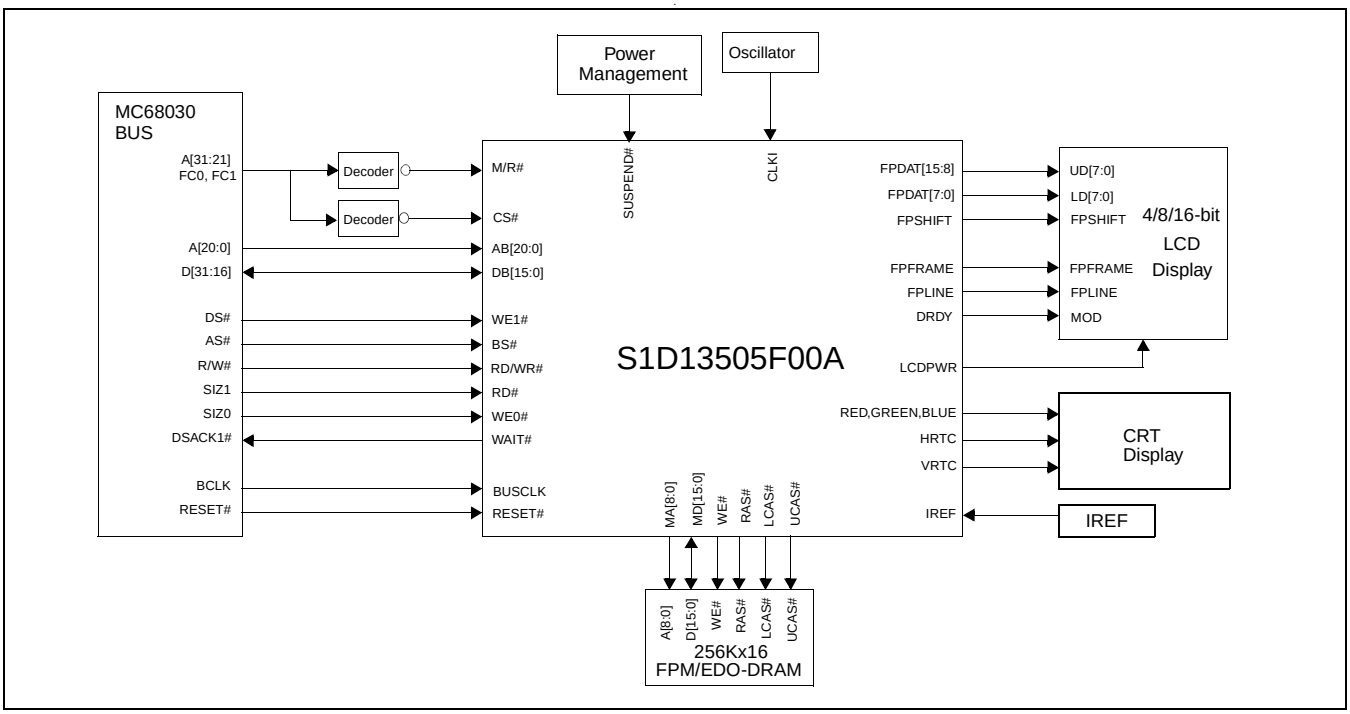

Figure 3-4: Typical System Diagram (MC68K Bus 2, 32-Bit 68030)

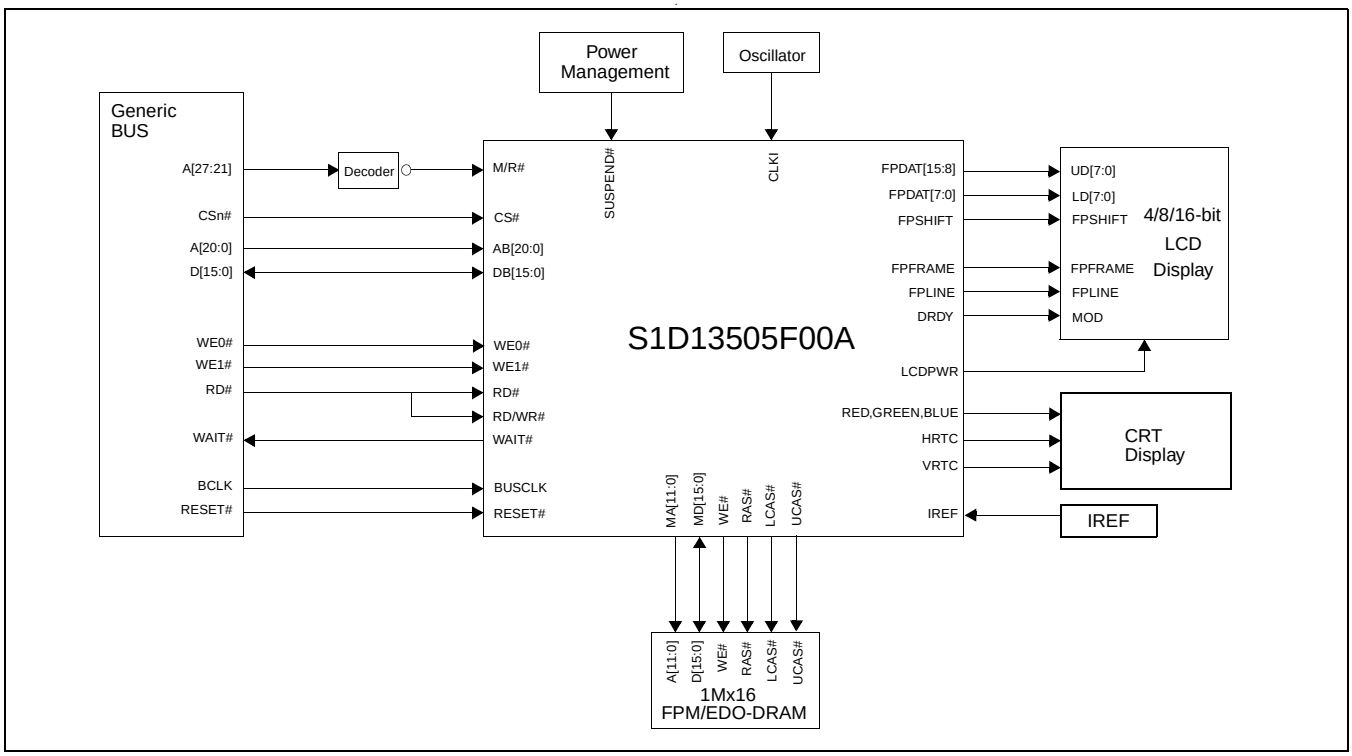

Figure 3-5: Typical System Diagram (Generic Bus)

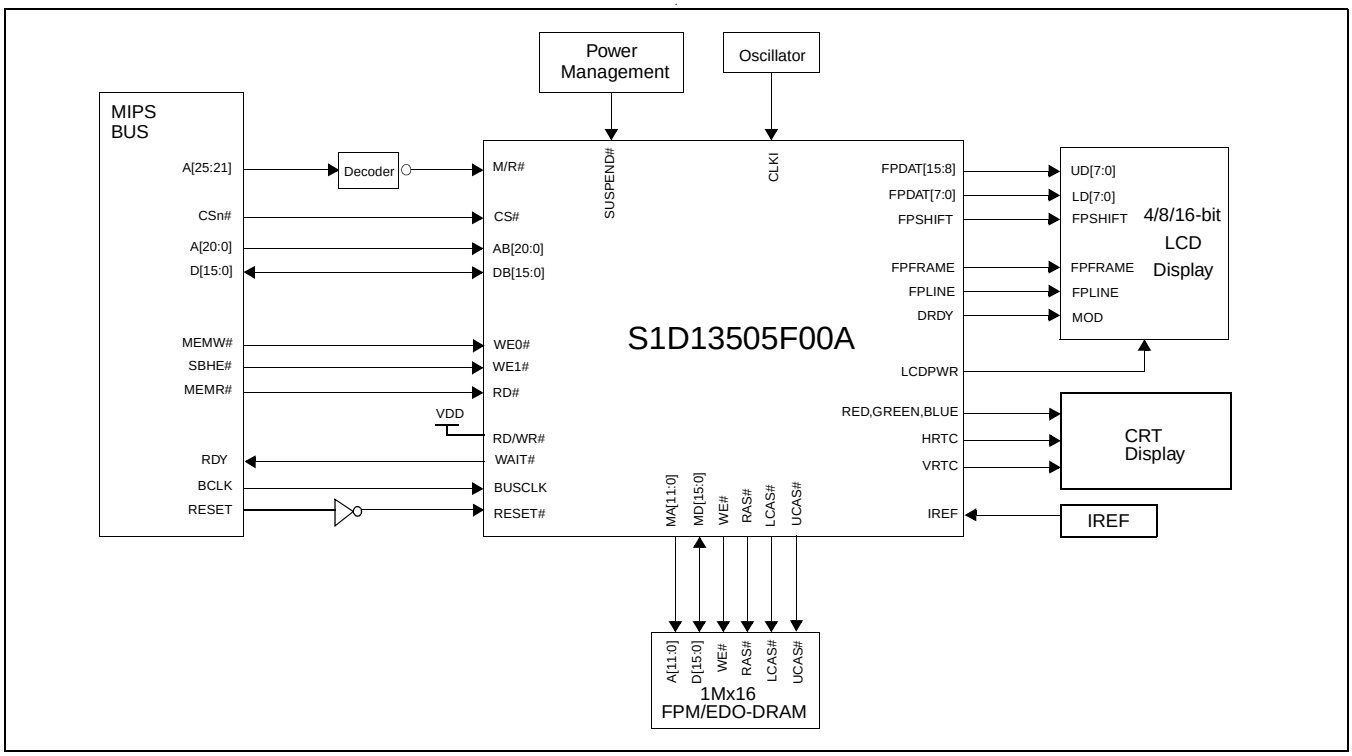

Figure 3-6: Typical System Diagram (NEC VR41xx (MIPS) Bus)

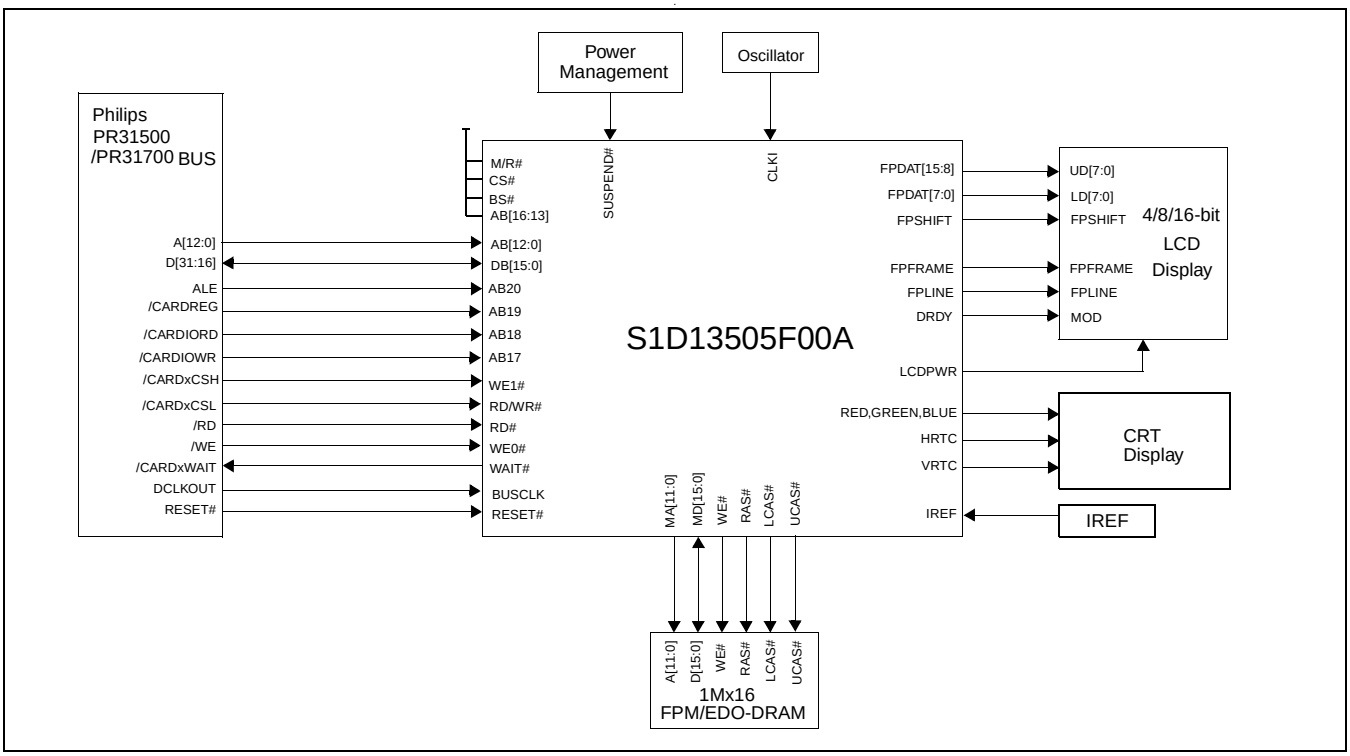

Figure 3-7: Typical System Diagram (Philips PR31500/PR31700 Bus)

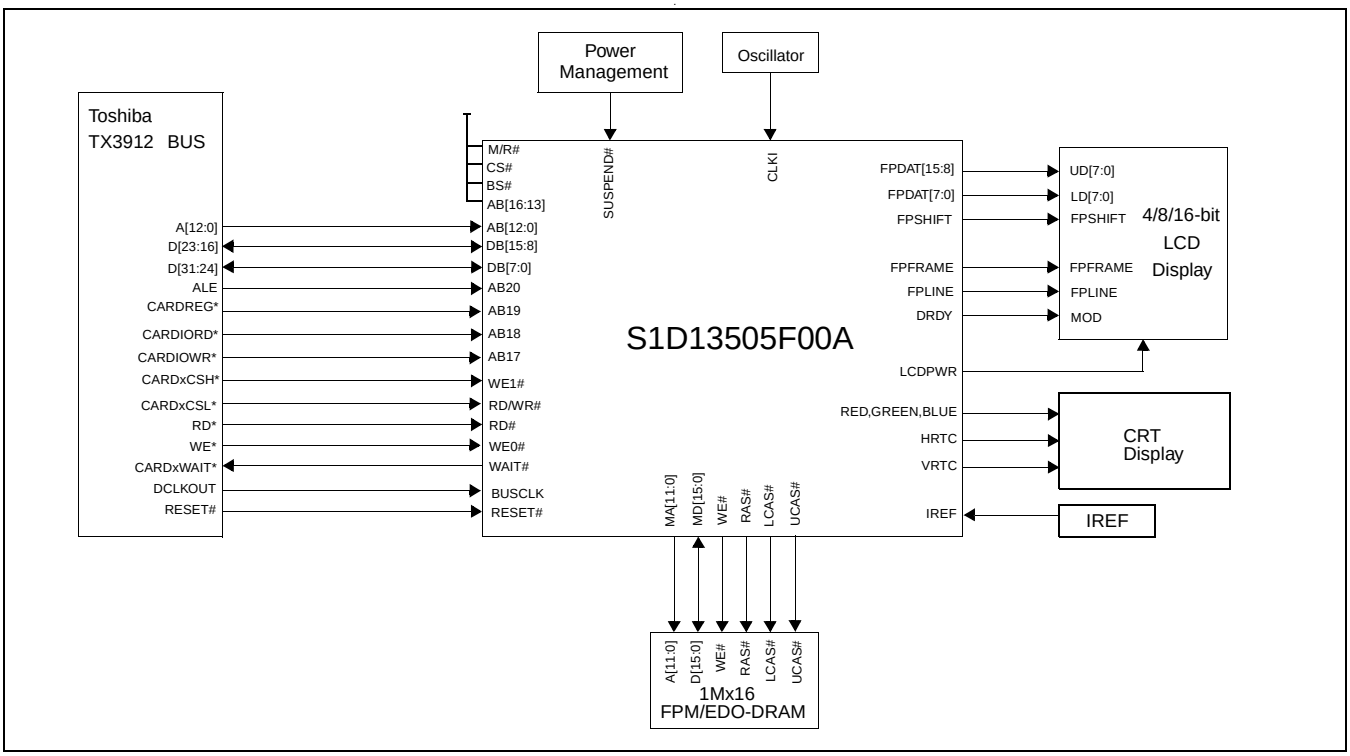

Figure 3-8: Typical System Diagram (Toshiba TX3912 Bus)

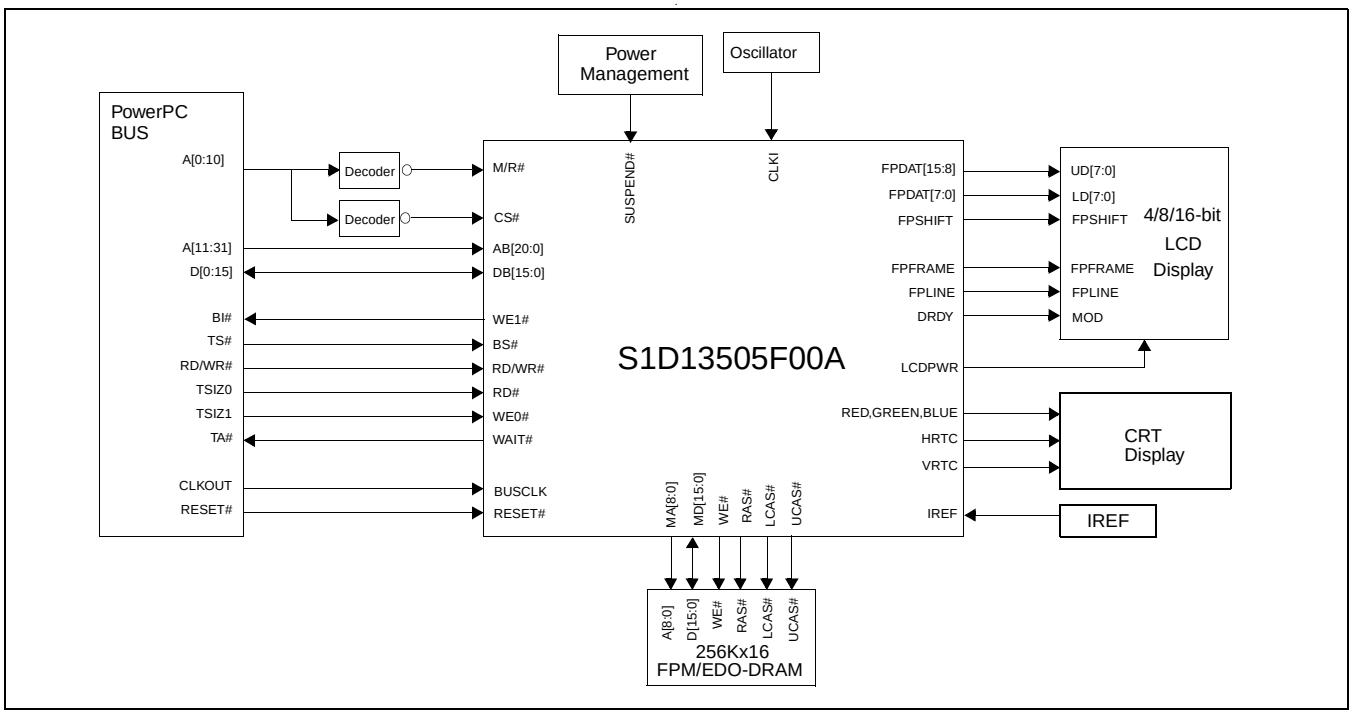

Figure 3-9: Typical System Diagram (Power PC Bus)

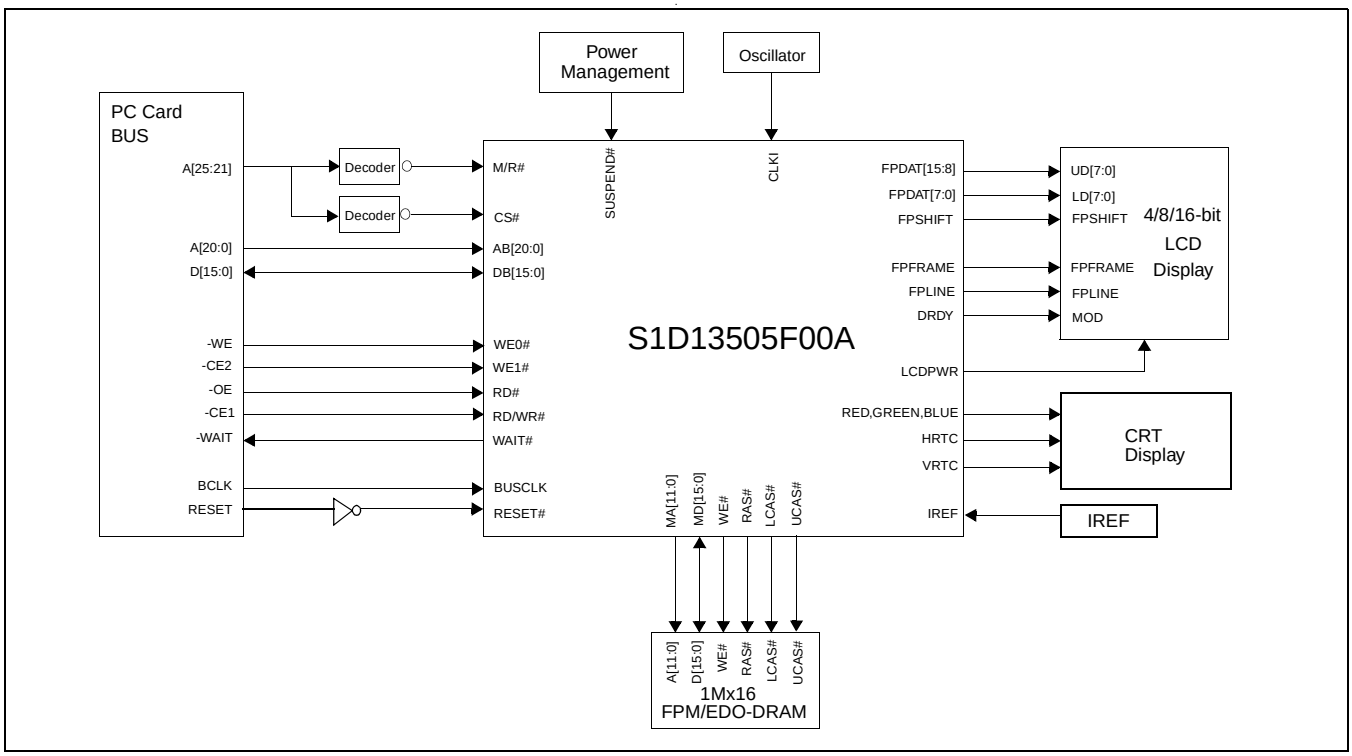

Figure 3-10: Typical System Diagram (PC Card (PCMCIA) Bus)

4 Internal Description

4.1 Block Diagram Showing Datapaths

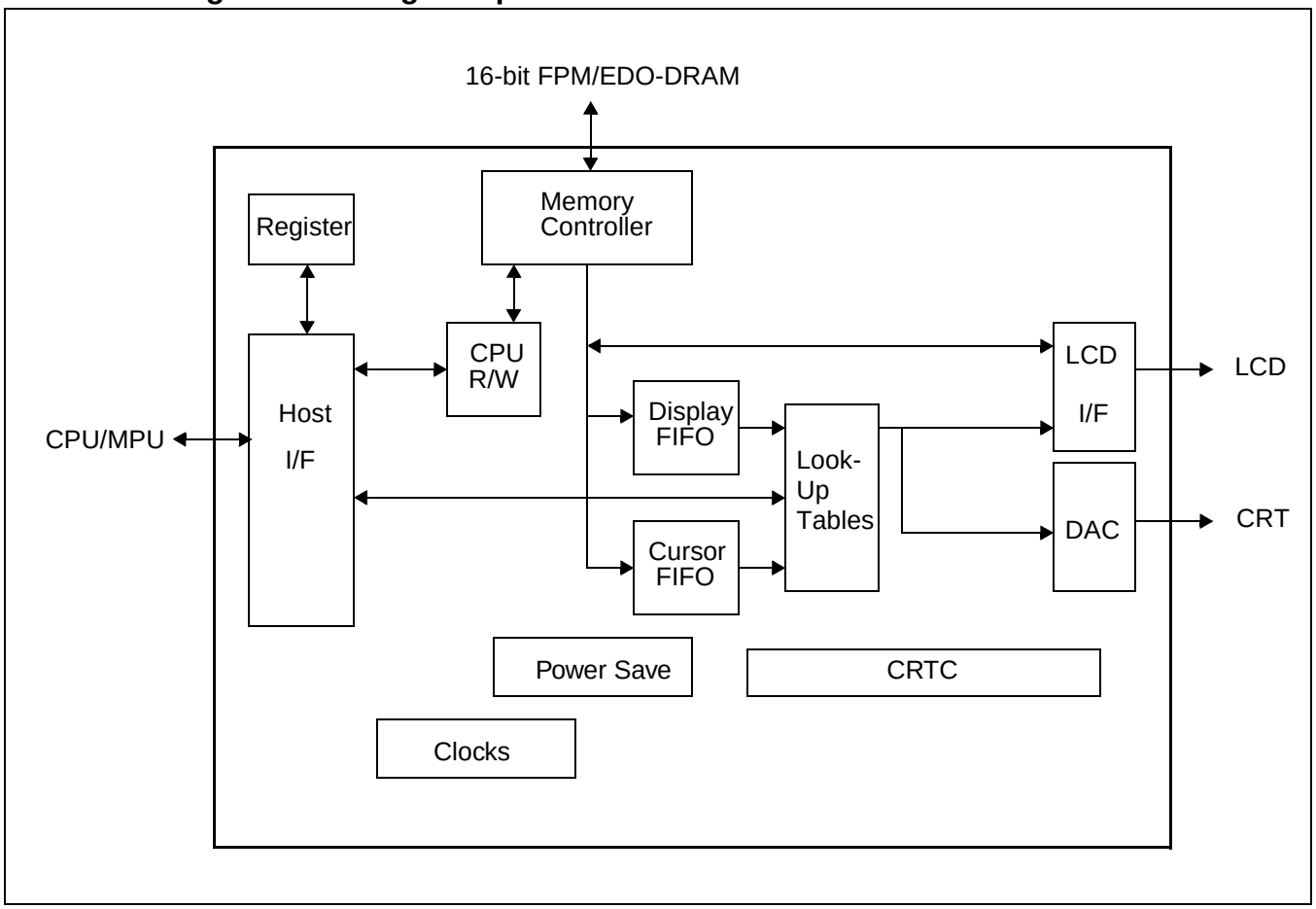

4.2 Block Descriptions

4.2.1 Register

The Register block contains all the register latches

4.2.2 Host Interface

The Host Interface (I/F) block provides the means for the CPU/MPU to communicate with the display buffer and internal registers via one of the supported bus interfaces.

4.2.3 CPU R/W

The CPU R/W block synchronizes the CPU requests for display buffer access. If SwivelView is enabled, the data is rotated in this block.

4.2.4 Memory Controller

The Memory Controller block arbitrates between CPU accesses and display refresh accesses as well as generates the necessary signals to interface to one of the supported 16-bit memory devices (FPM-DRAM or EDO-DRAM).

4.2.5 Display FIFO

The Display FIFO block fetches display data from the Memory Controller for display refresh.

4.2.6 Cursor FIFO

The Cursor FIFO block fetches Cursor/ink data from the Memory Controller for display refresh.

4.2.7 Look-Up Tables

The Look-Up Tables block contains three 256x4 Look-Up Tables (LUT), one for each primary color. In monochrome mode, only the green LUT is selected and used. This block contains anti-sparkle circuitry. The cursor/ink and display data are merged in this block.

4.2.8 CRTC

The CRTC generates the sync timing for the LCD and CRT, defining the vertical and horizontal display periods.

4.2.9 LCD Interface

The LCD Interface block performs Frame Rate Modulation (FRM) for passive LCD panels and generates the correct data format and timing control signals for various LCD and TFT/D-TFD panels.

4.2.10 DAC

The DAC is the Digital to Analog converter for analog CRT support.

4.2.11 Power Save

The Power Save block contains the power save mode circuitry.

4.2.12 Clocks

The Clocks module is the source of all clocks in the chip.

5 Pins

5.1 Pinout Diagram

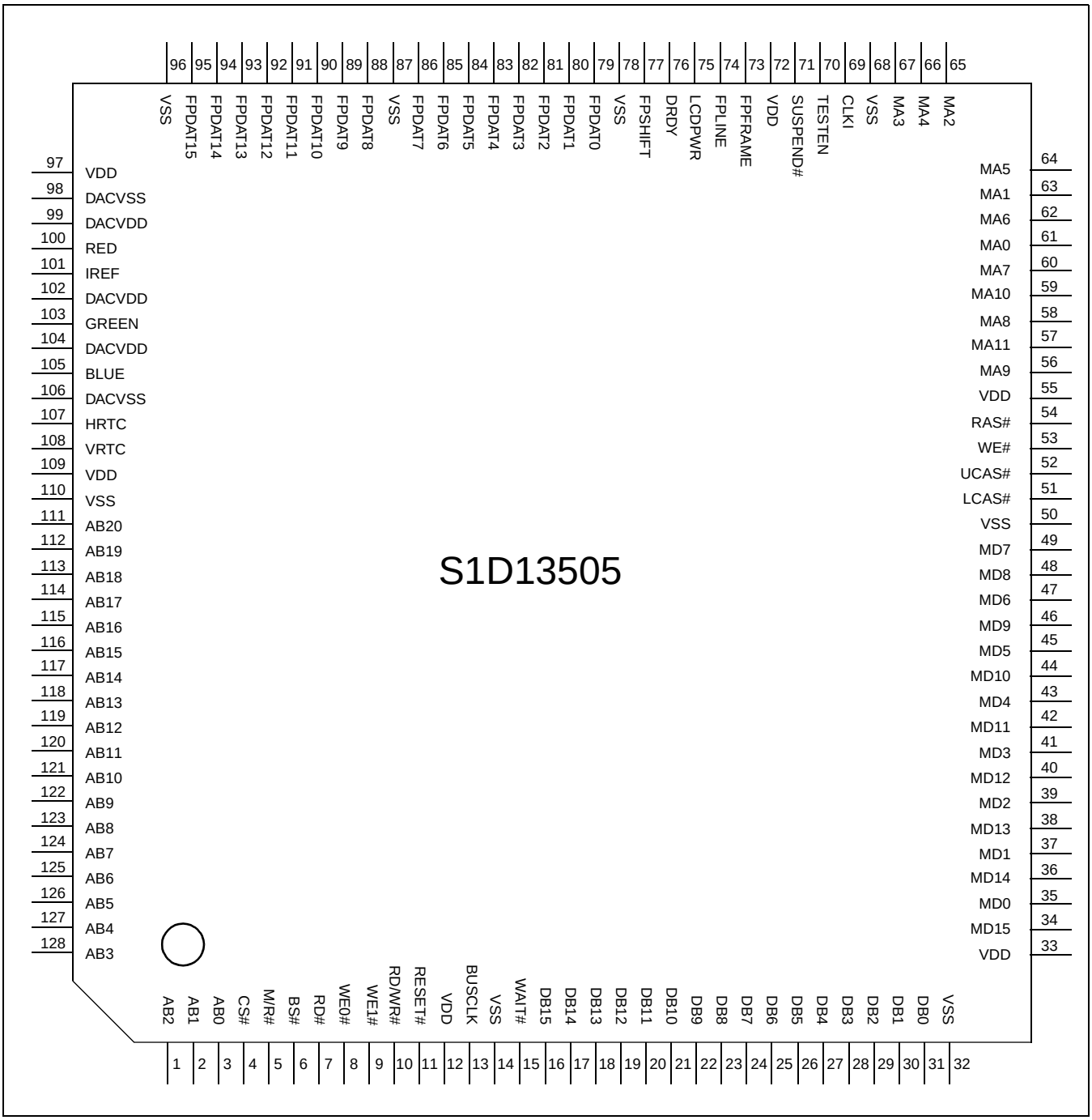

Figure 5-1: Pinout Diagram

128-pin QFP15 surface mount package

5.2 Pin Description

Key:

I	=	Input
O	=	Output
IO	=	Bi-Directional (Input/Output)
A	=	Analog
P	=	Power pin
C	=	CMOS level input
CD	=	CMOS level input with pull down resistor (typical values of 100KΩ/180KΩ at 5V/3.3V respectively)
CS	=	CMOS level Schmitt input
COx	=	CMOS output driver, x denotes driver type (see tables 6-3, 6-4, 6-5 for details)
TSx	=	Tri-state CMOS output driver, x denotes driver type (see tables 6-3, 6-4, 6-5 for details)
TSxD	=	Tri-state CMOS output driver with pull down resistor (typical values of 100KΩ/180KΩ at 5V/3.3V) respectively), x denotes driver type (see tables 6-3, 6-4, 6-5 for details)
CNx	=	CMOS low-noise output driver, x denotes driver type (see tables 6-3, 6-4, 6-5 for details)

5.2.1 Host Interface

Table 5-1: Host Interface Pin Descriptions

Pin Name	Type	Pin #	Cell	RESET# State	Description
AB0	I	3	CS	Hi-Z	• For SH-3/SH-4 Bus, this pin inputs system address bit 0 (A0). • For MC68K Bus 1, this pin inputs the lower data strobe (LDS#). • For MC68K Bus 2, this pin inputs system address bit 0 (A0). • For Generic Bus, this pin inputs system address bit 0 (A0). • For MIPS/ISA Bus, this pin inputs system address bit 0 (SA0). • For Philips PR31500/31700 Bus, this pin inputs system address bit 0 (A0). • For Toshiba TX3912 Bus, this pin inputs system address bit 0 (A0). • For PowerPC Bus, this pin inputs system address bit 31 (A31). • For PC Card (PCMCIA) Bus, this pin inputs system address bit 0 (A0). See *"Host Bus Interface Pin Mapping"* for summary. See the respective AC Timing diagram for detailed functionality.
AB[12:1]	I	119-128, 1, 2	C	Hi-Z	• For PowerPC Bus, these pins input the system address bits 19 through 30 (A[19:30]). • For all other busses, these pins input the system address bits 12 through 1 (A[12:1]). See *"Host Bus Interface Pin Mapping"* for summary. See the respective AC Timing diagram for detailed functionality.

Table 5-1: Host Interface Pin Descriptions (Continued)

Pin Name	Type	Pin #	Cell	RESET# State	Description
AB[16:13]	I	115-118	C	Hi-Z	• For Philips PR31500/31700 Bus, these pins are connected to V_{DD}. • For Toshiba TX3912 Bus, these pins are connected to V_{DD}. • For PowerPC Bus, these pins input the system address bits 15 through 18 (A[15:18]). • For all other busses, these pins input the system address bits 16 through 13 (A[16:13]). See *"Host Bus Interface Pin Mapping"* for summary. See the respective AC Timing diagram for detailed functionality.
AB17	I	114	C	Hi-Z	• For Philips PR31500/31700 Bus, this pin inputs the IO write command (/CARDIOWR). • For Toshiba TX3912 Bus, this pin inputs the IO write command (CARDIOWR*). • For PowerPC Bus, this pin inputs the system address bit 14 (A14). • For all other busses, this pin inputs the system address bit 17 (A17). See *"Host Bus Interface Pin Mapping"* for summary. See the respective AC Timing diagram for detailed functionality.
AB18	I	113	C	Hi-Z	• For Philips PR31500/31700 Bus, this pin inputs the IO read command (/CARDIORD). • For Toshiba TX3912 Bus, this pin inputs the IO read command (CARDIORD*). • For PowerPC Bus, this pin inputs the system address bit 13 (A13). • For all other busses, this pin inputs the system address bit 18 (A18). See *"Host Bus Interface Pin Mapping"* for summary. See the respective AC Timing diagram for detailed functionality.
AB19	I	112	C	Hi-Z	• For Philips PR31500/31700 Bus, this pin inputs the card control register access (/CARDREG). • For Toshiba TX3912 Bus, this pin inputs the card control register (CARDREG*). • For PowerPC Bus, this pin inputs the system address bit 12 (A12). • For all other busses, this pin inputs the system address bit 19 (A19). See *"Host Bus Interface Pin Mapping"* for summary. See the respective AC Timing diagram for detailed functionality.
AB20	I	111	C	Hi-Z	• For the MIPS/ISA Bus, this pin inputs system address bit 20. Note that for the ISA Bus, the unlatched LA20 must first be latched before input to AB20. • For Philips PR31500/31700 Bus, this pin inputs the address latch enable (ALE). • For Toshiba TX3912 Bus, this pin inputs the address latch enable (ALE). • For PowerPC Bus, this pin inputs the system address bit 11 (A11). • For all other busses, this pin inputs the system address bit 20 (A20). See *"Host Bus Interface Pin Mapping"* for summary. See the respective AC Timing diagram for detailed functionality.

Table 5-1: Host Interface Pin Descriptions (Continued)

Pin Name	Type	Pin #	Cell	RESET# State	Description
DB[15:0]	IO	16-31	C/TS2	Hi-Z	These pins are the system data bus. For 8-bit bus modes, unused data pins should be tied to V_{DD}. • For SH-3/SH-4 Bus, these pins are connected to D[15:0]. • For MC68K Bus 1, these pins are connected to D[15:0]. • For MC68K Bus 2, these pins are connected to D[31:16] for 32-bit devices (e.g. MC68030) or D[15:0] for 16-bit devices (e.g. MC68340). • For Generic Bus, these pins are connected to D[15:0]. • For MIPS/ISA Bus, these pins are connected to SD[15:0]. • For Philips PR31500/31700 Bus, these pins are connected to D[31:16]. • For Toshiba TX3912 Bus, pins [15:8] are connected to D[23:16] and pins [7:0] are connected to D[31:24]. • For PowerPC Bus, these pins are connected to D[0:15]. • For PC Card (PCMCIA) Bus, these pins are connected to D[15:0]. See *"Host Bus Interface Pin Mapping"* for summary. See the respective AC Timing diagram for detailed functionality.
WE1#	IO	9	CS/TS2	Hi-Z	This is a multi-purpose pin: • For SH-3/SH-4 Bus, this pin inputs the write enable signal for the upper data byte (WE1#). • For MC68K Bus 1, this pin inputs the upper data strobe (UDS#). • For MC68K Bus 2, this pin inputs the data strobe (DS#). • For Generic Bus, this pin inputs the write enable signal for the upper data byte (WE1#). • For MIPS/ISA Bus, this pin inputs the system byte high enable signal (SBHE#). • For Philips PR31500/31700 Bus, this pin inputs the odd byte access enable signal (/CARDxCSH). • For Toshiba TX3912 Bus, this pin inputs the odd byte access enable signal (CARDxCSH*). • For PowerPC Bus, this pin outputs the burst inhibit signal (BI#). • For PC Card (PCMCIA) Bus, this pin inputs the card enable 2 signal (-CE2). See *"Host Bus Interface Pin Mapping"* for summary. See the respective AC Timing diagram for detailed functionality.
M/R#	I	5	C	Hi-Z	• For Philips PR31500/31700 Bus, this pin is connected to V_{DD}. • For Toshiba TX3912 Bus, this pin is connected to V_{DD}. • For all other busses, this input pin is used to select between the display buffer and register address spaces of the S1D13505. M/R# is set high to access the display buffer and low to access the registers. See *Register Mapping*. See Table 5-6:, "CPU Interface Pin Mapping," on page 34.
CS#	I	4	C	Hi-Z	• For Philips PR31500/31700 Bus, this pin is connected to V_{DD}. • For Toshiba TX3912 Bus, this pin is connected to V_{DD}. • For all other busses, this is the Chip Select input. See Table 5-6:, "CPU Interface Pin Mapping," on page 34. See the respective AC Timing diagram for detailed functionality.

Table 5-1: Host Interface Pin Descriptions (Continued)

Pin Name	Type	Pin #	Cell	RESET# State	Description
BUSCLK	I	13	C	Hi-Z	This pin inputs the system bus clock. It is possible to apply a 2x clock and divide it by 2 internally - see MD12 in *Summary of Configuration Options*. • For SH-3/SH-4 Bus, this pin is connected to CKIO. • For MC68K Bus 1, this pin is connected to CLK. • For MC68K Bus 2, this pin is connected to CLK. • For Generic Bus, this pin is connected to BCLK. • For MIPS/ISA Bus, this pin is connected to CLK. • For Philips PR31500/31700 Bus, this pin is connected to DCLKOUT. • For Toshiba TX3912 Bus, this pin is connected to DCLKOUT. • For PowerPC Bus, this pin is connected to CLKOUT. • For PC Card (PCMCIA) Bus, this pin is connected to CLKI. See *"Host Bus Interface Pin Mapping"* for summary. See the respective AC Timing diagram for detailed functionality.
BS#	I	6	CS	Hi-Z	This is a multi-purpose pin: • For SH-3/SH-4 Bus, this pin inputs the bus start signal (BS#). • For MC68K Bus 1, this pin inputs the address strobe (AS#). • For MC68K Bus 2, this pin inputs the address strobe (AS#). • For Generic Bus, this pin is connected to V_{DD}. • For MIPS/ISA Bus, this pin is connected to V_{DD}. • For Philips PR31500/31700 Bus, this pin is connected to V_{DD}. • For Toshiba TX3912 Bus, this pin is connected to V_{DD}. • For PowerPC Bus, this pin inputs the Transfer Start signal (TS#). • For PC Card (PCMCIA) Bus, this pin is connected to V_{DD}. See *"Host Bus Interface Pin Mapping"* for summary. See the respective AC Timing diagram for detailed functionality.
RD/WR#	I	10	CS	Hi-Z	This is a multi-purpose pin: • For SH-3/SH-4 Bus, this pin inputs the read write signal (RD/WR#). The S1D13505 needs this signal for early decode of the bus cycle. • For MC68K Bus 1, this pin inputs the read write signal (R/W#). • For MC68K Bus 2, this pin inputs the read write signal (R/W#). • For Generic Bus, this pin inputs the read command for the upper data byte (RD1#). • For MIPS/ISA Bus, this pin is connected to V_{DD}. • For Philips PR31500/31700 Bus, this pin inputs the even byte access enable signal (/CARDxCSL). • For Toshiba TX3912 Bus, this pin inputs the even byte access enable signal (CARDxCSL*). • For PowerPC Bus, this pin inputs the read write signal (RD/WR#). • For PC Card (PCMCIA) Bus, this pin inputs the card enable 1 signal (-CE1). See *"Host Bus Interface Pin Mapping"* for summary. See the respective AC Timing diagram for detailed functionality.

Table 5-1: Host Interface Pin Descriptions (Continued)

Pin Name	Type	Pin #	Cell	RESET# State	Description
RD#	I	7	CS	Hi-Z	This is a multi-purpose pin: • For SH-3/SH-4 Bus, this pin inputs the read signal (RD#). • For MC68K Bus 1, this pin is connected to V_{DD}. • For MC68K Bus 2, this pin inputs the bus size bit 1 (SIZ1). • For Generic Bus, this pin inputs the read command for the lower data byte (RD0#). • For MIPS/ISA Bus, this pin inputs the memory read signal (MEMR#). • For Philips PR31500/31700 Bus, this pin inputs the memory read command (/RD). • For Toshiba TX3912 Bus, this pin inputs the memory read command (RD*). • For PowerPC Bus, this pin inputs the transfer size 0 signal (TSIZ0). • For PC Card (PCMCIA) Bus, this pin inputs the output enable signal (-OE). See *"Host Bus Interface Pin Mapping"* for summary. See the respective AC Timing diagram for detailed functionality.
WE0#	I	8	CS	Hi-Z	This is a multi-purpose pin: • For SH-3/SH-4 Bus, this pin inputs the write enable signal for the lower data byte (WE0#). • For MC68K Bus 1, this pin must be connected to V_{DD} • For MC68K Bus 2, this pin inputs the bus size bit 0 (SIZ0). • For Generic Bus, this pin inputs the write enable signal for the lower data byte (WE0#). • For MIPS/ISA Bus, this pin inputs the memory write signal (MEMW#). • For Philips PR31500/31700 Bus, this pin inputs the memory write command (/WE). • For Toshiba TX3912 Bus, this pin inputs the memory write command (WE*). • For PowerPC Bus, this pin inputs the Transfer Size 1 signal (TSIZ1). • For PC Card (PCMCIA) Bus, this pin inputs the write enable signal (-WE). See *"Host Bus Interface Pin Mapping"* for summary. See the respective AC Timing diagram for detailed functionality.

Table 5-1: Host Interface Pin Descriptions (Continued)

Pin Name	Type	Pin #	Cell	RESET# State	Description
WAIT#	O	15	TS2	Hi-Z	The active polarity of the WAIT# output is configurable; the state of MD5 on the rising edge of RESET# defines the active polarity of WAIT# - see *"Summary of Configuration Options"*. • For SH-3 Bus, this pin outputs the wait request signal (WAIT#); MD5 must be pulled low during reset by the internal pull-down resistor. • For SH-4 Bus, this pin outputs the ready signal (RDY#); MD5 must be pulled high during reset by an external pull-up resistor. • For MC68K Bus 1, this pin outputs the data transfer acknowledge signal (DTACK#); MD5 must be pulled high during reset by an external pull-up resistor. • For MC68K Bus 2, this pin outputs the data transfer and size acknowledge bit 1 (DSACK1#); MD5 must be pulled high during reset by an external pull-up resistor. • For Generic Bus, this pin outputs the wait signal (WAIT#); MD5 must be pulled low during reset by the internal pull-down resistor. • For MIPS/ISA Bus, this pin outputs the IO channel ready signal (IOCHRDY); MD5 must be pulled low during reset by the internal pull-down resistor. • For Philips PR31500/31700 Bus, this pin outputs the wait state signal (/CARDxWAIT); MD5 must be pulled low during reset by the internal pull-down resistor. • For Toshiba TX3912 Bus, this pin outputs the wait state signal (CARDxWAIT*); MD5 must be pulled low during reset by the internal pull-down resistor. • For PowerPC Bus, this pin outputs the transfer acknowledge signal (TA#); MD5 must be pulled high during reset by an external pull-up resistor. • For PC Card (PCMCIA) Bus, this pin outputs the wait signal (-WAIT); MD5 must be pulled low during reset by the internal pull-down resistor. See *"Host Bus Interface Pin Mapping"* for summary. See the respective AC Timing diagram for detailed functionality.
RESET#	I	11	CS	0	Active low input that clears all internal registers and forces all outputs to their inactive states. Note that active high RESET signals must be inverted before input to this pin.

5.2.2 Memory Interface

Table 5-2: Memory Interface Pin Descriptions

Pin Name	Type	Pin #	Cell	RESET# State	Description
LCAS#	O	51	CO1	1	• For dual-CAS# DRAM, this is the column address strobe for the lower byte (LCAS#). • For single-CAS# DRAM, this is the column address strobe (CAS#). See *"Memory Interface Pin Mapping"* for summary. See *Memory Interface Timing* for detailed functionality.
UCAS#	O	52	CO1	1	This is a multi-purpose pin: • For dual-CAS# DRAM, this is the column address strobe for the upper byte (UCAS#). • For single-CAS# DRAM, this is the write enable signal for the upper byte (UWE#). See *"Memory Interface Pin Mapping"* for summary. See *Memory Interface Timing* for detailed functionality.
WE#	O	53	CO1	1	• For dual-CAS# DRAM, this is the write enable signal (WE#). • For single-CAS# DRAM, this is the write enable signal for the lower byte (LWE#). See *"Memory Interface Pin Mapping"* for summary. See *Memory Interface Timing* for detailed functionality.
RAS#	O	54	CO1	1	Row address strobe - see *Memory Interface Timing* for detailed functionality.
MD[15:0]	IO	34, 36, 38, 40, 42, 44, 46, 48, 49, 47, 45, 43, 41, 39, 37, 35	C/TS 1D	Hi-Z	Bi-Directional memory data bus. During reset, these pins are inputs and their states at the rising edge of RESET# are used to configure the chip - see *Summary of Configuration Options*. Internal pull-down resistors (typical values of 100KΩ/180KΩ at 5V/3.3V respectively) pull the reset states to 0. External pull-up resistors can be used to pull the reset states to 1. See *Memory Interface Timing* for detailed functionality.

Table 5-2: Memory Interface Pin Descriptions (Continued)

Pin Name	Type	Pin #	Cell	RESET# State	Description
MA[8:0]	O	58, 60, 62, 64, 66, 67, 65, 63, 61	CO1	0utput	Multiplexed memory address - see *Memory Interface Timing* for functionality.
MA9	IO	56	C/TS 1	0utput	This is a multi-purpose pin: • For 2M byte DRAM, this is memory address bit 9 (MA9). • For asymmetrical 512K byte DRAM, this is memory address bit 9 (MA9). • For symmetrical 512K byte DRAM, this pin can be used as general purpose IO pin 3 (GPIO3). Note that unless configured otherwise, this pin defaults to an input and must be driven to a valid logic level. See *"Memory Interface Pin Mapping"* for summary. See *Memory Interface Timing* for detailed functionality.
MA10	IO	59	C/TS 1	0utput	This is a multi-purpose pin: • For asymmetrical 2M byte DRAM this is memory address bit 10 (MA10). • For symmetrical 2M byte DRAM and all 512K byte DRAM this pin can be used as general purpose IO pin 1 (GPIO1). Note that unless configured otherwise, this pin defaults to an input and must be driven to a valid logic level. See *"Memory Interface Pin Mapping"* for summary. See *Memory Interface Timing* for detailed functionality.
MA11	IO	57	C/TS 1	0utput	This is a multi-purpose pin: • For asymmetrical 2M byte DRAM this is memory address bit 11 (MA11). • For symmetrical 2M byte DRAM and all 512K byte DRAM this pin can be used as general purpose IO pin 2 (GPIO2). Note that unless configured otherwise, this pin defaults to an input and must be driven to a valid logic level. See *"Memory Interface Pin Mapping"* for summary. See *Memory Interface Timing* for detailed functionality.

5.2.3 LCD Interface

Table 5-2: LCD Interface Pin Descriptions

Pin Name	Type	Pin #	Cell	RESET# State	Description
FPDAT[15:0]	O	95-88, 86-79	CN3	0utput	Panel data bus. Not all pins are used for some panels - see *LCD Interface Pin Mapping* for details. Unused pins are driven low.
FPFRAME	O	73	CN3	0utput	Frame pulse
FPLINE	O	74	CN3	0utput	Line pulse
FPSHIFT	O	77	CO3	0utput	Shift clock
LCDPWR	O	75	CO1	0utput if MD[10]=0 1 if MD[10]=1	LCD power control output. The active polarity of this output is selected by the state of MD10 at the rising edge of RESET# - see *Summary of Configuration Options*. This output is controlled by the power save mode circuitry - see *Power Save Modes* for details.
DRDY	O	76	CN3	0utput	This is a multi-purpose pin: • For TFT/D-TFD panels this is the display enable output (DRDY). • For passive LCD with Format 1 interface this is the 2nd Shift Clock (FPSHIFT2) • For all other LCD panels this is the LCD backplane bias signal (MOD). See *LCD Interface Pin Mapping* and REG[02h] for details.

5.2.4 CRT Interface

Table 5-3: CRT Interface Pin Descriptions

Pin Name	Type	Pin #	Cell	RESET # State	Description
HRTC	IO	107	CN3	0utput	Horizontal retrace signal for CRT
VRTC	IO	108	CN3	0utput	Vertical retrace signal for CRT
RED	O	100	A		Analog output for CRT color Red
GREEN	O	103	A		Analog output for CRT color Green
BLUE	O	105	A		Analog output for CRT color Blue
IREF	I	101	A		Current reference for DAC - see *Analog Pins*. This pin must be left unconnected if the DAC is not needed.

5.2.5 Miscellaneous

Table 5-4: Miscellaneous Interface Pin Descriptions

Pin Name	Type	Pin #	Cell	RESET# State	Description
SUSPEND#	IO	71	CS/TS1	Hi-Z if MD[9]=0 High if MD[10:9]=01 Low if MD[10:9]=11	This pin can be used as a power-down input (SUSPEND#) or as an output possibly used for controlling the LCD backlight power: • When MD9 = 0 at rising edge of RESET#, this pin is an active-low Schmitt input used to put the S1D13505 into Hardware Suspend mode - see Section 15, “Power Save Modes” for details. • When MD[10:9] = 01 at rising edge of RESET#, this pin is an output (GPO) with a reset state of 1. The state of GPO is controlled by REG[21h] bit 7. • When MD[10:9] = 11 at rising edge of RESET#, this pin is an output (GPO) with a reset state of 0. The state of GPO is controlled by REG[21h] bit 7.
CLKI	I	69	C		Input clock for the internal pixel clock (PCLK) and memory clock (MCLK). PCLK and MCLK are derived from CLKI - see REG[19h] for details.
TESTEN	I	70	CD	Hi-Z	Test Enable. This pin should be connected to V_{SS} for normal operation.
VDD	P	12, 33, 55, 72, 97, 109	P		V_{DD}
DACVDD	P	99, 102, 104	P		DAC V_{DD}
VSS	P	14, 32, 50, 68, 78, 87, 96, 110	P		V_{SS}
DACVSS	P	98, 106	P		DAC V_{SS}

5.3 Summary of Configuration Options

Table 5-5: Summary of Power On/Reset Options

Pin Name	value on this pin at rising edge of RESET# is used to configure: (1/0)	
	1	**0**
MD0	8-bit host bus interface	16-bit host bus interface
MD[3:1]	Select host bus interface:MD[11] = 0: 000 = SH-3/SH-4 bus interface 001 = MC68K Bus 1 010 = MC68K Bus 2 011 = Generic 100 = Reserved 101 = MIPS/ISA 110 = PowerPC 111 = PC Card (when MD11 = 1 Philips PR31500/PR31700 or Toshiba TX3912 Bus)	
MD4	Little Endian	Big Endian
MD5	WAIT# is active high (1 = insert wait state)	WAIT# is active low (0 = insert wait state)
MD[7:6]	Memory Address/GPIO configuration: 00 = symmetrical 256K×16 DRAM. MA[8:0] = DRAM address. MA[11:9] = GPIO2,1,3 pins. 01 = symmetrical 1M×16 DRAM. MA[9:0] = DRAM address. MA[10:11] = GPIO2,1 pins. 10 = asymmetrical 256K×16 DRAM. MA[9:0] = DRAM address. MA[10:11] = GPIO2,1 pins. 11 = asymmetrical 1M×16 DRAM. MA[11:0] = DRAM address.	
MD8	Not used	
MD9	SUSPEND# pin configured as GPO output	SUSPEND# pin configured as SUSPEND# input
MD10	Active low LCDPWR polarity or active high GPO polarity	Active high LCDPWR polarity or active low GPO polarity
MD11	Alternate Host Bus Interface Selected	Primary Host Bus Interface Selected
MD12	BUSCLK input divided by 2	BUSCLK input not divided
MD[15:13]	Not used	

5.4 Multiple Function Pin Mapping

Table 5-6: CPU Interface Pin Mapping

S1D13505 Pin Names	SH-3	SH-4	MC68K Bus 1	MC68K Bus 2	Generic	MIPS/ISA	Philips PR31500 /PR31700	Toshiba TX3912	PowerPC	PC Card (PCMCIA)
AB20	A20	A20	A20	A20	A20	LatchA20	ALE	ALE	A11	A20
AB19	A19	A19	A19	A19	A19	SA19	/CARDREG	CARDREG*	A12	A19
AB18	A18	A18	A18	A18	A18	SA18	/CARDIORD	CARDIORD*	A13	A18
AB17	A17	A17	A17	A17	A17	SA17	/CARDIOWR	CARDIOWR*	A14	A17
AB[16:13]	A[16:13]	A[16:13]	A[16:13]	A[16:13]	A[16:13]	SA[16:13]	V_{DD}	V_{DD}	A[15:18]	A[16:13]
AB[12:1]	A[12:1]	A[12:1]	A[12:1]	A[12:1]	A[12:1]	SA[12:1]	A[12:1]	A[12:1]	A[19:30]	A[12:1]
AB0	A0[1]	A0	LDS#	A0	A0[1]	SA0	A0[1]	A0[1]	A31	A0[1]
DB[15:8]	D[15:8]	D[15:8]	D[15:8]	D[31:24]	D[15:8]	SD[15:8]	D[31:24]	D[31:24]	D[0:7]	D[15:8]
DB[7:0]	D[7:0]	D[7:0]	D[7:0]	D[23:16]	D[7:0]	SD[7:0]	D[23:16]	D[23:16]	D[8:15	D[7:0]
WE1#	WE1#	WE1#	UDS#	DS#	WE1#	SBHE#	/CARDxCSH	CARDxCSH*	BI#	-CE2
M/R#	External Decode						V_{DD}		External Decode	
CS#	External Decode						V_{DD}		External Decode	
BUSCLK	CKIO	CKIO	CLK	CLK	BCLK	CLK	DCLKOUT	DCLKOUT	CLKOUT	CLKI
BS#	BS#	BS#	AS#	AS#	V_{DD}	V_{DD}	V_{DD}	V_{DD}	TS#	V_{DD}
RD/WR#	RD/WR#	RD/WR#	R/W#	R/W#	RD1#	V_{DD}	/CARDxCSL	CARDxCSL*	RD/WR#	-CE1
RD#	RD#	RD#	V_{DD}	SIZ1	RD0#	MEMR#	/RD	RD*	TSIZ0	-OE
WE0#	WE0#	WE0#	V_{DD}	SIZ0	WE0#	MEMW#	/WE	WE*	TSIZ1	-WE
WAIT#	WAIT#	RDY	DTACK#	DSACK1#	WAIT#	IOCHRDY	/CARDxWAIT	CARDxWAIT*	TA#	-WAIT
RESET#	RESET#	RESET#	RESET#	RESET#	RESET#	inverted RESET	RESET#	PON*	RESET#	inverted RESET

Note

[1] The bus signal A0 is not used by the S1D13505 internally.

Table 5-7: Memory Interface Pin Mapping

S1D13505 Pin Names	**FPM/EDO-DRAM**							
	Sym 256Kx16		**Asym 256Kx16**		**Sym 1Mx16**		**Asym 1Mx16**	
	2-CAS#	**2-WE#**	**2-CAS#**	**2-WE#**	**2-CAS#**	**2-WE#**	**2-CAS#**	**2-WE#**
MD[15:0]	D[15:0]							
MA[8:0]	A[8:0]							
MA9	GPIO3		A9				A9	
MA10	GPIO1						A10	
MA11	GPIO2						A11	
UCAS#	UCAS#	UWE#	UCAS#	UWE#	UCAS#	UWE#	UCAS#	UWE#
LCAS#	LCAS#	CAS#	LCAS#	CAS#	LCAS#	CAS#	LCAS#	CAS#
WE#	WE#	LWE#	WE#	LWE#	WE#	LWE#	WE#	LWE#
RAS#	RAS#							

Note

All GPIO pins default to input on reset and unless programmed otherwise, should be connected to either V_{SS} or IO V_{DD} if not used.

Table 5-8: LCD Interface Pin Mapping

S1D13505 Pin Names	**Monochrome Passive Panel**			**Color Passive Panel**						**Color TFT/D-TFD Panel**		
	Single		**Dual**	**Single**	**Single Format 1**	**Single Format 2**	**Single**	**Dual**				
	4-bit	**8-bit**	**8-bit**	**4-bit**	**8-bit**	**8-bit**	**16-Bit**	**8-bit**	**16-bit**	**9-bit**	**12-bit**	**18-bit**
FPFRAME	FPFRAME											
FPLINE	FPLINE											
FPSHIFT	FPSHIFT											
DRDY	MOD				FPSHIFT 2	MOD				DRDY		
FPDAT0	driven 0	D0	LD0	driven 0	D0	D0	D0	LD0	LD0	R2	R3	R5
FPDAT1	driven 0	D1	LD1	driven 0	D1	D1	D1	LD1	LD1	R1	R2	R4
FPDAT2	driven 0	D2	LD2	driven 0	D2	D2	D2	LD2	LD2	R0	R1	R3
FPDAT3	driven 0	D3	LD3	driven 0	D3	D3	D3	LD3	LD3	G2	G3	G5
FPDAT4	D0	D4	UD0	D0	D4	D4	D4	UD0	UD0	G1	G2	G4
FPDAT5	D1	D5	UD1	D1	D5	D5	D5	UD1	UD1	G0	G1	G3
FPDAT6	D2	D6	UD2	D2	D6	D6	D6	UD2	UD2	B2	B3	B5
FPDAT7	D3	D7	UD3	D3	D7	D7	D7	UD3	UD3	B1	B2	B4
FPDAT8	driven 0	driven 0	driven 0	driven 0	driven 0	driven 0	D8	driven 0	LD4	B0	B1	B3
FPDAT9	driven 0	driven 0	driven 0	driven 0	driven 0	driven 0	D9	driven 0	LD5	driven 0	R0	R2
FPDAT10	driven 0	driven 0	driven 0	driven 0	driven 0	driven 0	D10	driven 0	LD6	driven 0	driven 0	R1
FPDAT11	driven 0	driven 0	driven 0	driven 0	driven 0	driven 0	D11	driven 0	LD7	driven 0	G0	G2
FPDAT12]	driven 0	driven 0	driven 0	driven 0	driven 0	driven 0	D12	driven 0	UD4	driven 0	driven 0	G1
FPDAT13	driven 0	driven 0	driven 0	driven 0	driven 0	driven 0	D13	driven 0	UD5	driven 0	driven 0	G0
FPDAT14	driven 0	driven 0	driven 0	driven 0	driven 0	driven 0	D14	driven 0	UD6	driven 0	B0	B2
FPDAT15	driven 0	driven 0	driven 0	driven 0	driven 0	driven 0	D15	driven 0	UD7	driven 0	driven 0	B1

5.5 CRT Interface

The following figure shows the external circuitry for the CRT interface.

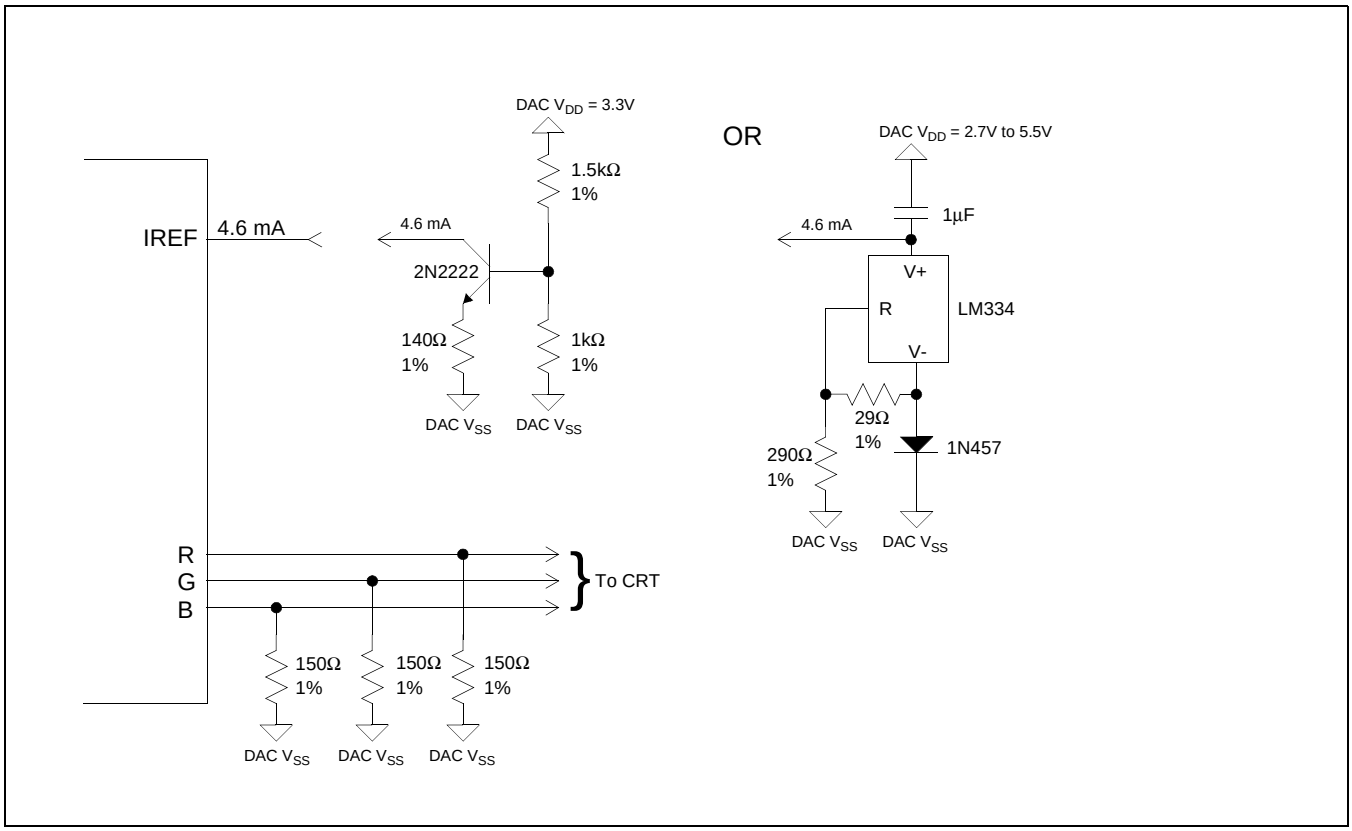

Figure 5-3: External Circuitry for CRT Interface

6 D.C. Characteristics

Table 6-1: Absolute Maximum Ratings

Symbol	Parameter	Rating	Units
V_{DD}	Supply Voltage	V_{SS} - 0.3 to 6.0	V
DAC V_{DD}	Supply Voltage	V_{SS} - 0.3 to 6.0	V
V_{IN}	Input Voltage	V_{SS} - 0.3 to V_{DD} + 0.5	V
V_{OUT}	Output Voltage	V_{SS} - 0.3 to V_{DD} + 0.5	V
T_{STG}	Storage Temperature	-65 to 150	° C
T_{SOL}	Solder Temperature/Time	260 for 10 sec. max at lead	° C

Table 6-2: Recommended Operating Conditions

Symbol	Parameter	Condition	Min	Typ	Max	Units
V_{DD}	Supply Voltage	V_{SS} = 0 V	2.7	3.0/3.3/5.0	5.5	V
V_{IN}	Input Voltage		V_{SS}		V_{DD}	V
T_{OPR}	Operating Temperature		-40	25	85	° C

Table 6-3: Electrical Characteristics for VDD = 5.0V typical

Symbol	Parameter	Condition	Min	Typ	Max	Units
I_{DDS}	Quiescent Current	Quiescent Conditions			400	uA
I_{IZ}	Input Leakage Current		-1		1	µA
I_{OZ}	Output Leakage Current		-1		1	µA
V_{OH}	High Level Output Voltage	VDD = min I_{OL} = -4mA (Type1), -8mA (Type2) -12mA (Type3)	V_{DD} - 0.4			V
V_{OL}	Low Level Output Voltage	VDD = min I_{OL} = 4mA (Type1), 8mA (Type2) 12mA (Type3)			0.4	V
V_{IH}	High Level Input Voltage	CMOS level, V_{DD} = max	3.5			V
V_{IL}	Low Level Input Voltage	CMOS level, V_{DD} = min			1.0	V
V_{T+}	High Level Input Voltage	CMOS Schmitt, V_{DD} = 5.0V			4.0	V
V_{T-}	Low Level Input Voltage	CMOS Schmitt, V_{DD} = 5.0V	0.8			V
V_{H1}	Hysteresis Voltage	CMOS Schmitt, V_{DD} = 5.0V	0.3			V
R_{PD}	Pull Down Resistance	$V_I = V_{DD}$	50	100	200	kΩ
C_I	Input Pin Capacitance				12	pF
C_O	Output Pin Capacitance				12	pF
C_{IO}	Bi-Directional Pin Capacitance				12	pF

Table 6-4: Electrical Characteristics for VDD = 3.3V typical

Symbol	Parameter	Condition	Min	Typ	Max	Units
I_{DDS}	Quiescent Current	Quiescent Conditions			290	uA
I_{IZ}	Input Leakage Current		-1		1	µA
I_{OZ}	Output Leakage Current		-1		1	µA
V_{OH}	High Level Output Voltage	VDD = min I_{OL} = -2mA (Type1), -4mA (Type2) -6mA (Type3)	V_{DD} - 0.3			V
V_{OL}	Low Level Output Voltage	VDD = min I_{OL} = 2mA (Type1), 4mA (Type2) 6mA (Type3)			0.3	V
V_{IH}	High Level Input Voltage	CMOS level, V_{DD} = max	2.2			V
V_{IL}	Low Level Input Voltage	CMOS level, V_{DD} = min			0.8	V
V_{T+}	High Level Input Voltage	CMOS Schmitt, V_{DD} = 3.3V			2.4	V
V_{T-}	Low Level Input Voltage	CMOS Schmitt, V_{DD} = 3.3V	0.6			V
V_{H1}	Hysteresis Voltage	CMOS Schmitt, V_{DD} = 3.3V	0.1			V
R_{PD}	Pull Down Resistance	$V_I = V_{DD}$	90	180	360	kΩ
C_I	Input Pin Capacitance				12	pF
C_O	Output Pin Capacitance				12	pF
C_{IO}	Bi-Directional Pin Capacitance				12	pF

Table 6-5: Electrical Characteristics for VDD = 3.0V typical

Symbol	Parameter	Condition	Min	Typ	Max	Units
I_{DDS}	Quiescent Current	Quiescent Conditions			260	uA
I_{IZ}	Input Leakage Current		-1		1	µA
I_{OZ}	Output Leakage Current		-1		1	µA
V_{OH}	High Level Output Voltage	VDD = min I_{OL} = -1.8mA (Type1), -3.5mA (Type2) -5mA (Type3)	V_{DD} - 0.3			V
V_{OL}	Low Level Output Voltage	VDD = min I_{OL} = 1.8mA (Type1), 3.5mA (Type2) 5mA (Type3)			0.3	V
V_{IH}	High Level Input Voltage	CMOS level, V_{DD} = max	2.0			V
V_{IL}	Low Level Input Voltage	CMOS level, V_{DD} = min			0.8	V
V_{T+}	High Level Input Voltage	CMOS Schmitt, V_{DD} = 3.0V			2.3	V
V_{T-}	Low Level Input Voltage	CMOS Schmitt, V_{DD} = 3.0V	0.5			V
V_{H1}	Hysteresis Voltage	CMOS Schmitt, V_{DD} = 3.0V	0.1			V
R_{PD}	Pull Down Resistance	$V_I = V_{DD}$	100	200	400	kΩ
C_I	Input Pin Capacitance				12	pF
C_O	Output Pin Capacitance				12	pF
C_{IO}	Bi-Directional Pin Capacitance				12	pF

7 A.C. Characteristics

Conditions: V_{DD} = 3.0V ± 10% and V_{DD} = 5.0V ± 10%
T_A = -40° C to 85° C
T_{rise} and T_{fall} for all inputs must be ≤ 5 nsec (10% ~ 90%)
C_L = 50pF (CPU Interface), unless noted
C_L = 100pF (LCD Panel Interface)
C_L = 10pF (Display Buffer Interface)
C_L = 10pF (CRT Interface)

7.1 CPU Interface Timing

7.1.1 SH-4 Interface Timing

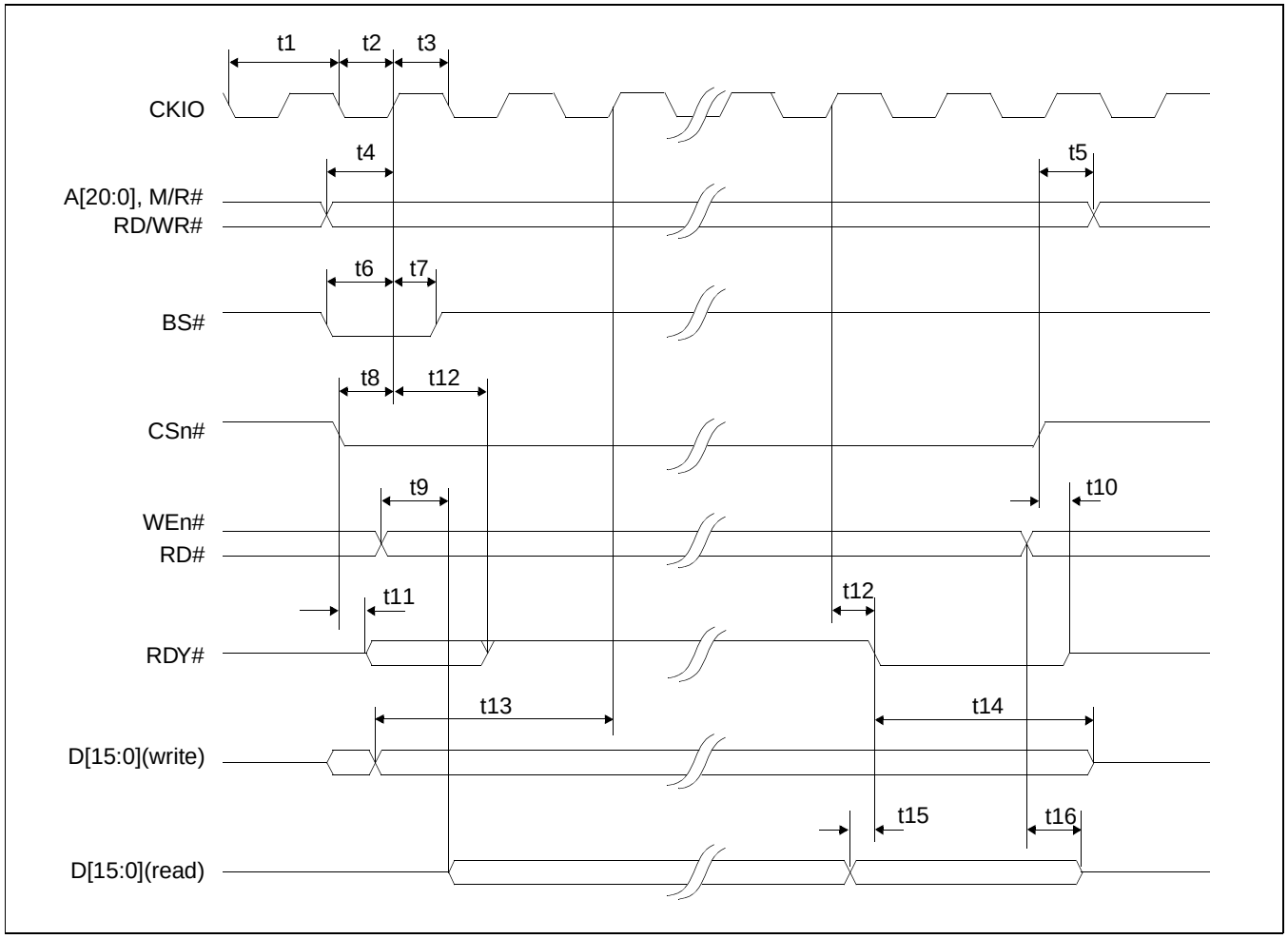

Figure 7-1: SH-4 Timing

Note

The above timing diagram is not applicable if the BUSCLK divided by 2 configuration option is selected.

Note

The SH-4 Wait State Control Register for the area in which the S1D13505 resides must be set to a non-zero value. The SH-4 read-to-write cycle transition must be set to a non-zero value (with reference to BUSCLK).

Table 7-1: SH-4 Timing

		3.0V[a]		5.0V[b]		
Symbol	**Parameter**	**Min**	**Max**	**Min**	**Max**	**Units**
t1	Clock period	15		15		ns
t2	Clock pulse width high	6		6		ns
t3	Clock pulse width low	6		6		ns
t4	A[20:0], M/R#, RD/WR# setup to CKIO	3		3		ns
t5	A[20:0], M/R#, RD/WR# hold from CS#	0		0		ns
t6	BS# setup	4		4		ns
t7	BS# hold	1		1		ns
t8	CSn# setup	4		4		ns
t9[2]	Falling edge RD# to D[15:0] driven	0		0		ns
t10	Rising edge CSn# to RDY# tri-state	5	25	2.5	10	ns
t11[1]	Falling edge CSn# to RDY# driven	0	15	0	10	ns
t12	CKIO to WAIT# delay	4	20	3.6	12	ns
t13	D[15:0] setup to 2nd CKIO after BS# (write cycle)	10		10		ns
t14	D[15:0] hold (write cycle)	0		0		ns
t15	D[15:0] valid to RDY# falling edge (read cycle)	0		0		ns
t16	Rising edge RD# to D[15:0] tri-state (read cycle)	5	25	2.5	10	ns

[a] Two Software WAIT States Required
[b] One Software WAIT State Required

1. If the S1D13505 host interface is disabled, the timing for RDY# driven is relative to the falling edge of CSn# <u>or</u> the first positive edge of CKIO after A[20:0], M/R# becomes valid, whichever one is later.

2. If the S1D13505 host interface is disabled, the timing for D[15:0] driven is relative to the falling edge of RD# <u>or</u> the first positive edge of CKIO after A[20:0], M/R# becomes valid, whichever one is later.

7.1.2 SH-3 Interface Timing

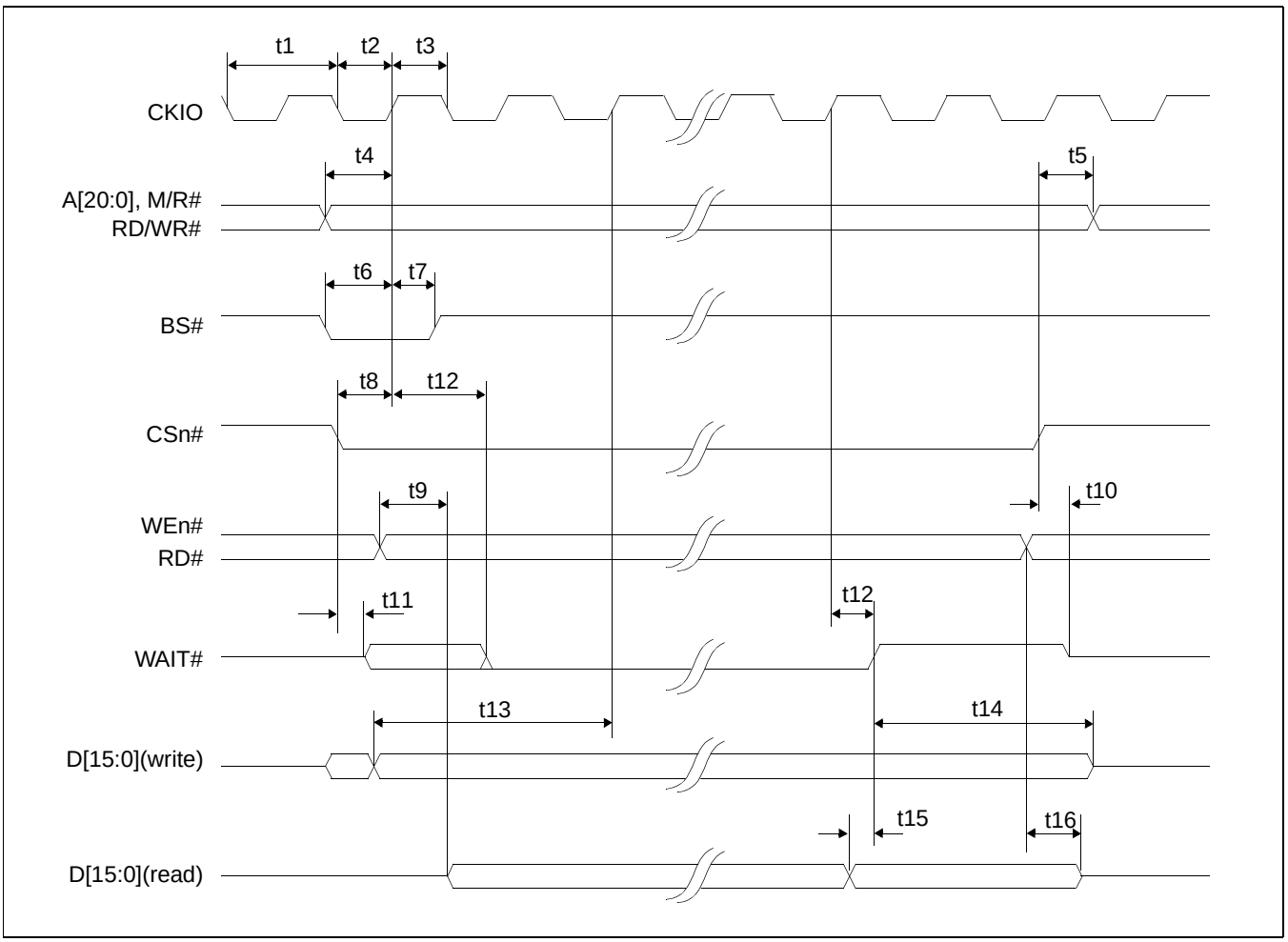

Figure 7-2: SH-3 Timing

Note

The above timing diagram is not applicable if the BUSCLK divided by 2 configuration option is selected.

Note

The SH-3 Wait State Control Register for the area in which the S1D13505 resides must be set to a non-zero value.

Table 7-2: SH-3 Timing

		3.0V[a]		5.0V[b]		
Symbol	**Parameter**	**Min**	**Max**	**Min**	**Max**	**Units**
t1	Clock period	15.1		15.1		ns
t2	Clock pulse width high	6		6		ns
t3	Clock pulse width low	6		6		ns
t4	A[20:0], M/R#, RD/WR# setup to CKIO	3		3		ns
t5	A[20:0], M/R#, RD/WR# hold from CS#	0		0		ns
t6	BS# setup	4		4		ns
t7	BS# hold	1		1		ns
t8	CSn# setup	4		4		ns
t9[2]	Falling edge RD# to D[15:0] driven	0		0		ns
t10	Rising edge CSn# to WAIT# tri-state	5	25	2.5	10	ns
t11[1]	Falling edge CSn# to WAIT# driven	0	15	0	10	ns
t12	CKIO to WAIT# delay	4	20	3.6	12	ns
t13	D[15:0] setup to 2nd CKIO after BS# (write cycle)	10		10		ns
t14	D[15:0] hold (write cycle)	0		0		ns
t15	D[15:0] valid to WAIT# rising edge (read cycle)	0		0		ns
t16	Rising edge RD# to D[15:0] tri-state (read cycle)	5	25	2.5	10	ns

[a] Two Software WAIT States Required
[b] One Software WAIT State Required

1. If the S1D13505 host interface is disabled, the timing for WAIT# driven is relative to the falling edge of CSn# <u>or</u> the first positive edge of CKIO after A[20:0], M/R# becomes valid, whichever one is later.

2. If the S1D13505 host interface is disabled, the timing for D[15:0] driven is relative to the falling edge of RD# <u>or</u> the first positive edge of CKIO after A[20:0], M/R# becomes valid, whichever one is later.

7.1.3 MC68K Bus 1 Interface Timing (e.g. MC68000)

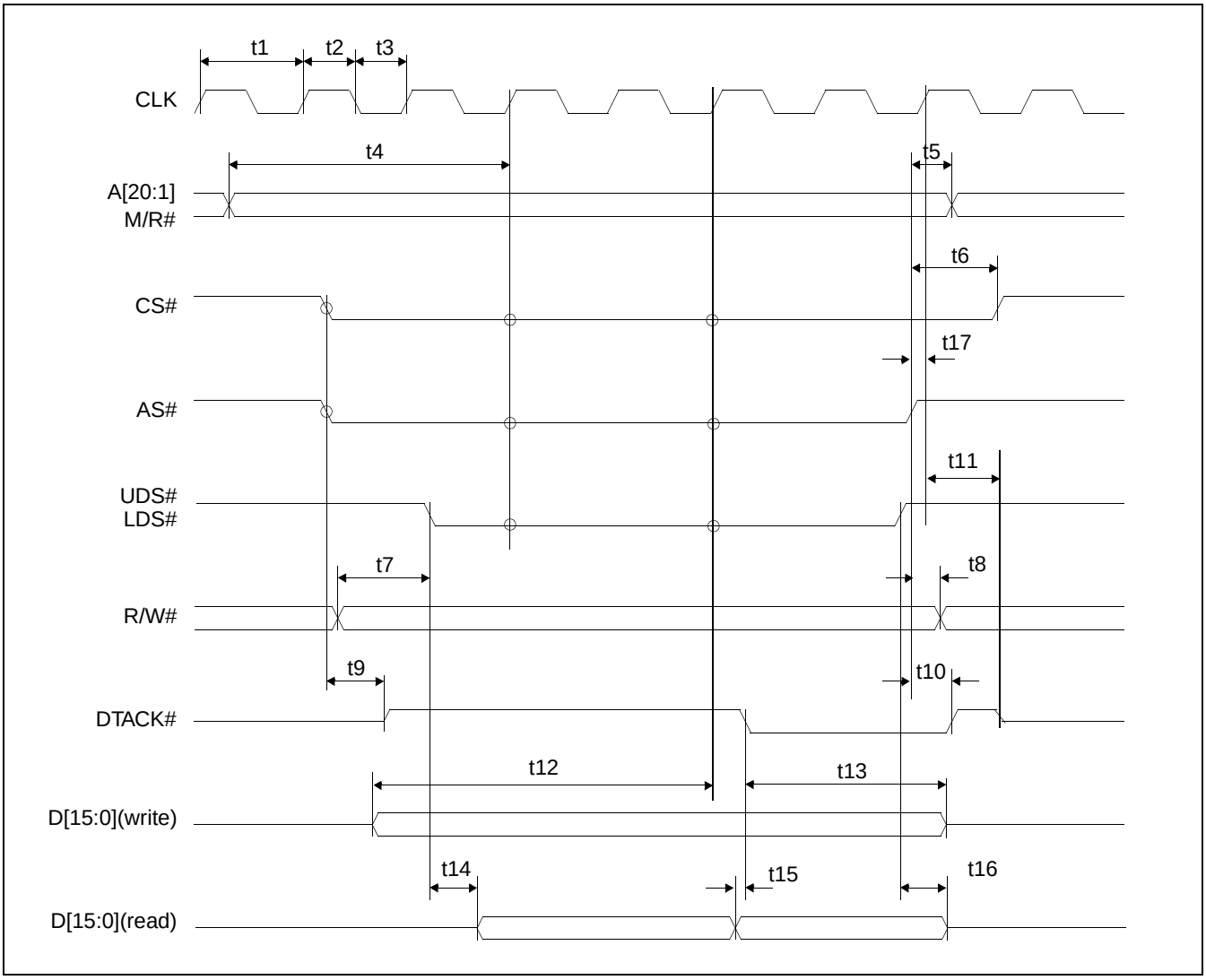

Figure 7-3: MC68000 Timing

Note

The above timing diagram is not applicable if the BUSCLK divided by 2 configuration option is selected.

Table 7-3: MC68000 Timing

		3.0V		5.0V		
Symbol	**Parameter**	**Min**	**Max**	**Min**	**Max**	**Units**
t1	Clock period	20		20		ns
t2	Clock pulse width high	6		6		ns
t3	Clock pulse width low	6		6		ns
t4	A[20:1], M/R# setup to first CLK where CS# = 0 AS# = 0, and either UDS#=0 or LDS# = 0	10		10		ns
t5	A[20:1], M/R# hold from AS#	0		0		ns
t6	CS# hold from AS#	0		0		ns
t7	R/W# setup to before to either UDS#=0 or LDS# = 0	10		10		ns
t8	R/W# hold from AS#	0		0		ns
t9[1]	AS# = 0 and CS# = 0 to DTACK# driven high	0		0		ns
t10	AS# high to DTACK# high	3	18	3	12	ns
t11	First BCLK where AS# = 1 to DTACK# high impedance		25		10	ns
t12	D[15:0] valid to third CLK where CS# = 0 AS# = 0, and either UDS#=0 or LDS# = 0 (write cycle)	10		10		ns
t13	D[15:0] hold from falling edge of DTACK# (write cycle)	0		0		ns
t14[2]	Falling edge of UDS#=0 or LDS#=0 to D[15:0] driven (read cycle)	0		0		ns
t15	D[15:0] valid to DTACK# falling edge (read cycle)	0		0		ns
t16	UDS# and LDS# high to D[15:0] invalid/high impedance (read cycle)	5	25	2.5	10	ns
t17	AS# high setup to CLK	2		2		ns

1. If the S1D13505 host interface is disabled, the timing for DTACK# driven high is relative to the falling edge of CS#, AS# <u>or</u> the first positive edge of CLK after A[20:1], M/R# becomes valid,
   whichever one is later.

2. If the S1D13505 host interface is disabled, the timing for D[15:0] driven is relative to the falling edge of UDS#, LDS# <u>or</u> the first positive edge of CLK after A[20:1], M/R# becomes valid, whichever one is later.

7.1.4 MC68K Bus 2 Interface Timing (e.g. MC68030)

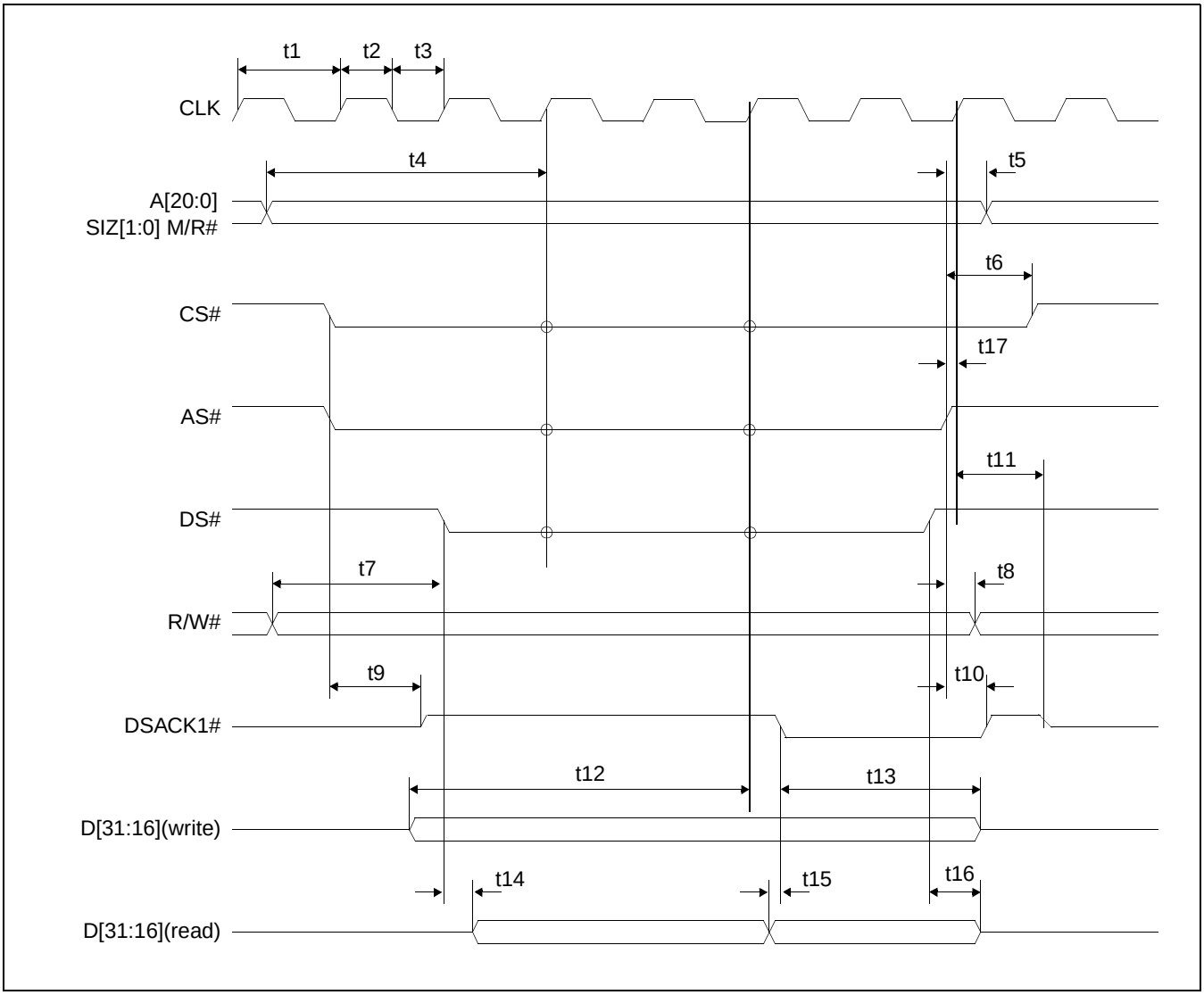

Figure 7-4: MC68030 Timing

Note

The above timing diagram is not applicable if the BUSCLK divided by 2 configuration option is selected.

Table 7-4: MC68030 Timing

		3.0V		5.0V		
Symbol	**Parameter**	**Min**	**Max**	**Min**	**Max**	**Units**
t1	Clock period	20		20		ns
t2	Clock pulse width high	6		6		ns
t3	Clock pulse width low	6		6		ns
t4	A[20:0], SIZ[1:0], M/R# setup to first CLK where CS# = 0 AS# = 0, and either UDS#=0 or LDS# = 0	10		10		ns
t5	A[20:0], SIZ[1:0], M/R# hold from AS#	0		0		ns
t6	CS# hold from AS#	0		0		ns
t7	R/W# setup to DS#	10		10		ns
t8	R/W# hold from AS#	0		0		ns
t9[1]	AS# = 0 and CS# = 0 to DSACK1# driven high	0		0		ns
t10	AS# high to DSACK1# high	3	18	3	12	ns
t11	First BCLK where AS# = 1 to DSACK1# high impedance	5	25	2.5	10	ns
t12	D[31:16] valid to third CLK where CS# = 0 AS# = 0, and either UDS#=0 or LDS# = 0 (write cycle)	10		10		ns
t13	D[31:16] hold from falling edge of DSACK1# (write cycle)	0		0		ns
t14[2]	Falling edge of UDS#=0 or LDS# = 0 to D[31:16] driven (read cycle)	0		0		ns
t15	D[31:16] valid to DSACK1# falling edge (read cycle)	0		0		ns
t16	UDS# and LDS# high to D[31:16] invalid/high impedance (read cycle)	5	25	2.5	10	ns
t17	AS# high setup to CLK	2		2		ns

1. If the S1D13505 host interface is disabled, the timing for DSACK1# driven high is relative to the falling edge of CS#, AS# <u>or</u> the first positive edge of CLK after A[20:0], M/R# becomes valid, whichever one is later.

2. If the S1D13505 host interface is disabled, the timing for D[31:16] driven is relative to the falling edge of UDS#, LDS# <u>or</u> the first positive edge of CLK after A[20:0], M/R# becomes valid, whichever one is later.

7.1.5 PC Card Interface Timing

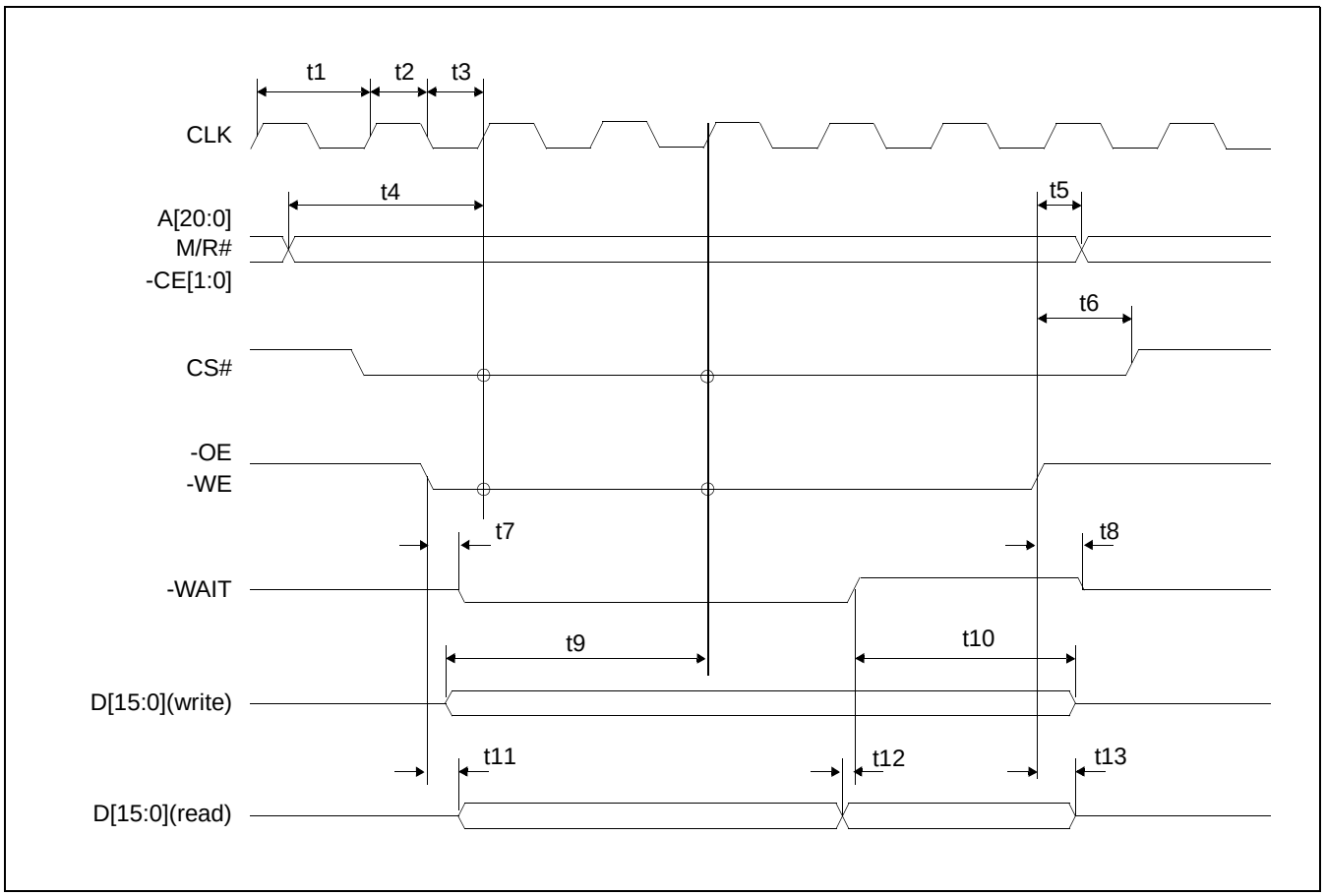

Figure 7-5: PC Card Timing

Note

The above timing diagram is not applicable if the BUSCLK divided by 2 configuration option is selected.

Table 7-5: PC Card Timing

		3.0V		5.0V		
Symbol	**Parameter**	**Min**	**Max**	**Min**	**Max**	**Units**
t1	Clock period	20		20		ns
t2	Clock pulse width high	6		6		ns
t3	Clock pulse width low	6		6		ns
t4	A[20:0], M/R# setup to first CLK where CS# = 0 and either -OE = 0 or -WE = 0	10		10		ns
t5	A[20:0], M/R# hold from rising edge of either -OE or -WE	0		0		ns
t6	CS# hold from rising edge of either -OE or -WE	0		0		ns
t7[1]	Falling edge of either -OE or -WE to -WAIT driven low	0	15	0	10	ns
t8	Rising edge of either -OE or -WE to -WAIT tri-state	5	25	2.5	10	ns
t9	D[15:0] setup to third CLK where CS# = 0 and -WE = 0 (write cycle)	10		10		ns
t10	D[15:0] hold (write cycle)	0		0		ns
t11[2]	Falling edge -OE to D[15:0] driven (read cycle)	0		0		ns
t12	D[15:0] setup to rising edge -WAIT (read cycle)	0		0		ns
t13	Rising edge of -OE to D[15:0] tri-state (read cycle)	5	25	5	10	ns

1. If the S1D13505 host interface is disabled, the timing for -WAIT driven low is relative to the falling edge of -OE, -WE <u>or</u> the first positive edge of CLK after A[20:0], M/R# becomes valid, whichever one is later.

2. If the S1D13505 host interface is disabled, the timing for D[15:0] driven is relative to the falling edge of -OE <u>or</u> the first positive edge of CLK after A[20:0], M/R# becomes valid, whichever one is later.

7.1.6 Generic Interface Timing

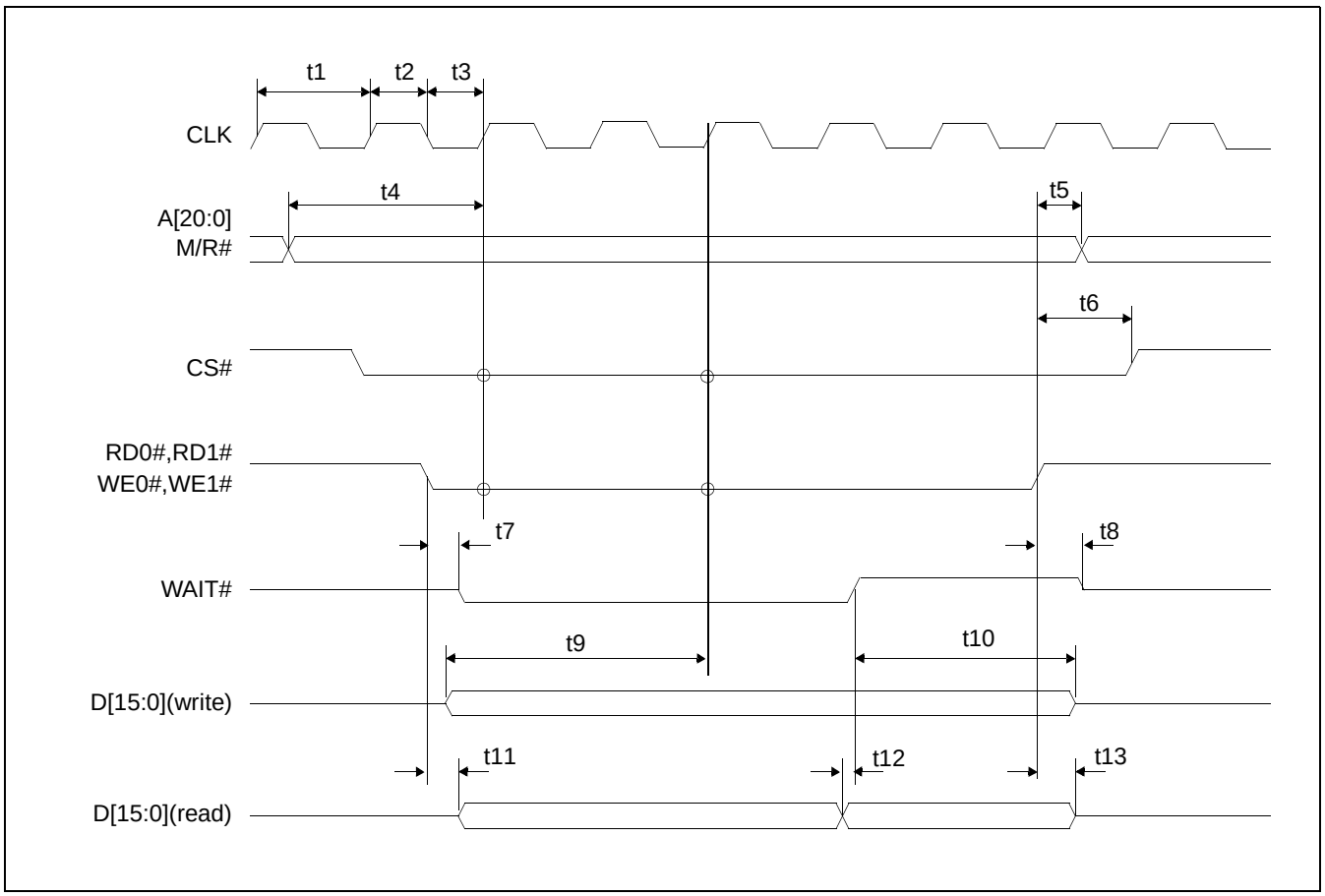

Figure 7-6: Generic Timing

Note

The above timing diagram is not applicable if the BUSCLK divided by 2 configuration option is selected.

Table 7-6: Generic Timing

		3.0V		5.0V		
Symbol	**Parameter**	**Min**	**Max**	**Min**	**Max**	**Units**
t1	Clock period	20		20		ns
t2	Clock pulse width high	6		6		ns
t3	Clock pulse width low	6		6		ns
t4	A[20:0], M/R# setup to first CLK where CS# = 0 and either RD0#,RD1#,WE0# or WE1# = 0	10		10		ns
t5	A[20:0], M/R# hold from rising edge of either RD0#,RD1#,WE0# or WE1# = 0	0		0		ns
t6	CS# hold from rising edge of either RD0#,RD1#,WE0# or WE1# = 0	0		0		ns
t7[1]	Falling edge of either RD0#,RD1#,WE0# or WE1# to WAIT# driven low	0	15	0	10	ns
t8	Rising edge of either RD0#,RD1#,WE0# or WE1# to WAIT# tri-state	5	25	2.5	10	ns
t9	D[15:0] setup to third CLK where CS# = 0 and WE0#,WE1# = 0 (write cycle)	10		10		ns
t10	D[15:0] hold (write cycle)	0		0		ns
t11[2]	Falling edge RD0#,RD1# to D[15:0] driven (read cycle)	0		0		ns
t12	D[15:0] setup to rising edge WAIT# (read cycle)	0		0		ns
t13	Rising edge of RD0#,RD1# to D[15:0] tri-state (read cycle)	5	25	5	10	ns

1. If the S1D13505 host interface is disabled, the timing for WAIT# driven low is relative to the falling edge of RD0#, RD1#, WE0#, WE1# <u>or</u> the first positive edge of CLK after A[20:0], M/R# becomes valid, whichever one is later.

2. If the S1D13505 host interface is disabled, the timing for D[15:0] driven is relative to the falling edge of RD0#, RD1# <u>or</u> the first positive edge of CLK after A[20:0], M/R# becomes valid, whichever one is later.

7.1.7 MIPS/ISA Interface Timing

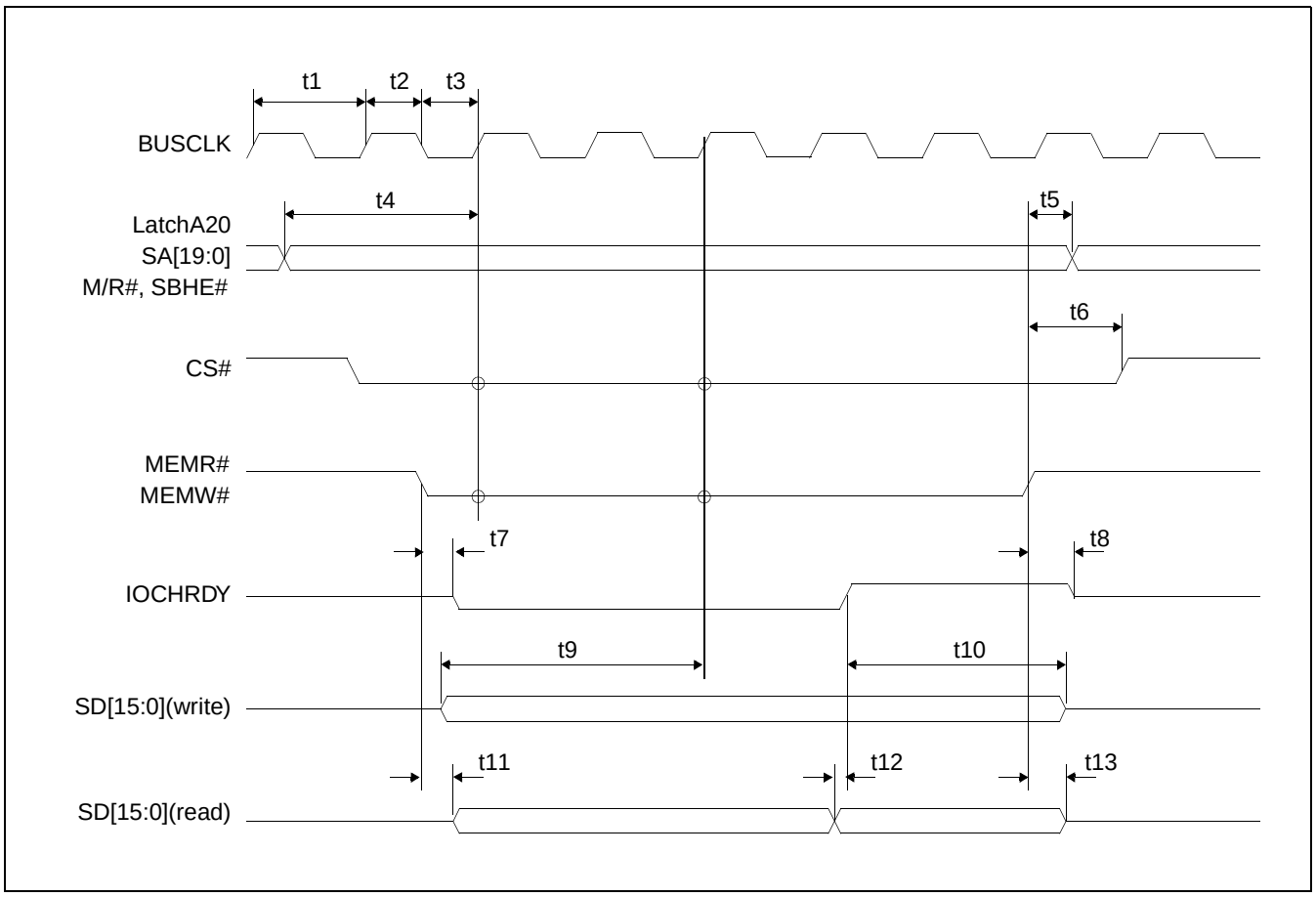

Figure 7-7: MIPS/ISA Timing

Note

The above timing diagram is not applicable if the BUSCLK divided by 2 configuration option is selected.

Table 7-7: MIPS/ISA Timing

		3.0V		5.0V		
Symbol	**Parameter**	**Min**	**Max**	**Min**	**Max**	**Units**
t1	Clock period	20		20		ns
t2	Clock pulse width high	6		6		ns
t3	Clock pulse width low	6		6		ns
t4	LatchA20, SA[19:0], M/R#, SBHE# setup to first BUSCLK where CS# = 0 and either MEMR# = 0 or MEMW# = 0	10		10		ns
t5	LatchA20, SA[19:0], M/R#, SBHE# hold from rising edge of either MEMR# or MEMW#	0		0		ns
t6	CS# hold from rising edge of either MEMR# or MEMW#	0		0		ns
t7[1]	Falling edge of either MEMR# or MEMW# to IOCHRDY# driven low	0		0		ns
t8	Rising edge of either MEMR# or MEMW# to IOCHRDY# tri-state	5	25	2.5	10	ns
t9	SD[15:0] setup to third BUSCLK where CS# = 0 MEMW# = 0 (write cycle)	10		10		ns
t10	SD[15:0] hold (write cycle)	0		0		ns
t11[2]	Falling edge MEMR# to SD[15:0] driven (read cycle)	0		0		ns
t12	SD[15:0] setup to rising edge IOCHRDY# (read cycle)	0		0		ns
t13	Rising edge of MEMR# toSD[15:0] tri-state (read cycle)	5	25	5	10	ns

1. If the S1D13505 host interface is disabled, the timing for IOCHRDY driven low is relative to the falling edge of MEMR#, MEMW# <u>or</u> the first positive edge of BUSCLK after LatchA20, SA[19:0], M/R# becomes valid, whichever one is later.

2. If the S1D13505 host interface is disabled, the timing for SD[15:0] driven is relative to the falling edge of MEMR# <u>or</u> the first positive edge of BUSCLK after LatchA20, SA[19:0], M/R# becomes valid, whichever one is later.

7.1.8 Philips Interface Timing (e.g. PR31500/PR31700)

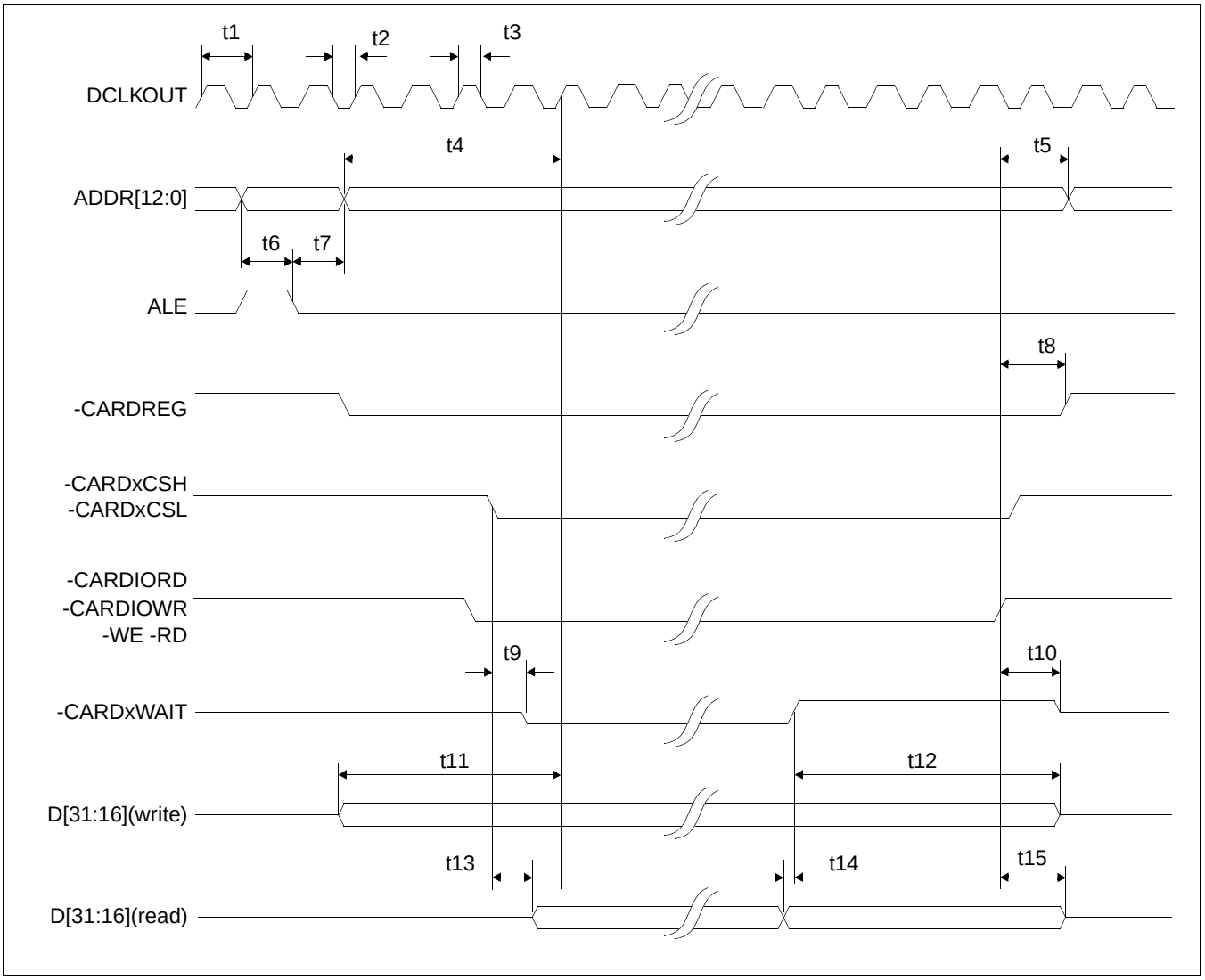

Figure 7-8: Philips Timing

Table 7-8: Philips Timing

		3.0V		5.0V		
Symbol	**Parameter**	**Min**	**Max**	**Min**	**Max**	**Units**
t1	Clock period	13.3		13.3		ns
t2	Clock pulse width low	6		6		ns
t3	Clock pulse width high	6		6		ns
t4	ADDR[12:0] setup to first CLK of cycle	10		10		ns
t5	ADDR[12:0] hold from command invalid	0		0		ns
t6	ADDR[12:0] setup to falling edge ALE	10		10		ns
t7	ADDR[12:0] hold from falling edge ALE	5		5		ns
t8	-CARDREG hold from command invalid	0		0		ns
t9[1]	Falling edge of chip select to -CARDxWAIT driven	0	15	0	9	ns
t10	Command invalid to -CARDxWAIT tri-state	5	25	2.5	10	ns
t11	D[31:16] valid to first CLK of cycle (write cycle)	10		10		ns
t12	D[31:16] hold from rising edge of -CARDxWAIT	0		0		
t13[2]	Chip select to D[31:16] driven (read cycle)	1		1		ns
t14	D[31:16] setup to rising edge -CARDxWAIT (read cycle)	0		0		ns
t15	Command invalid to D[31:16] tri-state (read cycle)	5	25	2.5	10	ns

1. If the S1D13505 host interface is disabled, the timing for -CARDxWAIT driven is relative to the falling edge of chip select <u>or</u> the second positive edge of DCLKOUT after ADDR[12:0] becomes valid, whichever one is later.

2. If the S1D13505 host interface is disabled, the timing for D[31:16] driven is relative to the falling edge of chip select <u>or</u> the second positive edge of DCLKOUT after ADDR[12:0] becomes valid, whichever one is later.

Note

The Philips interface has different clock input requirements as follows:

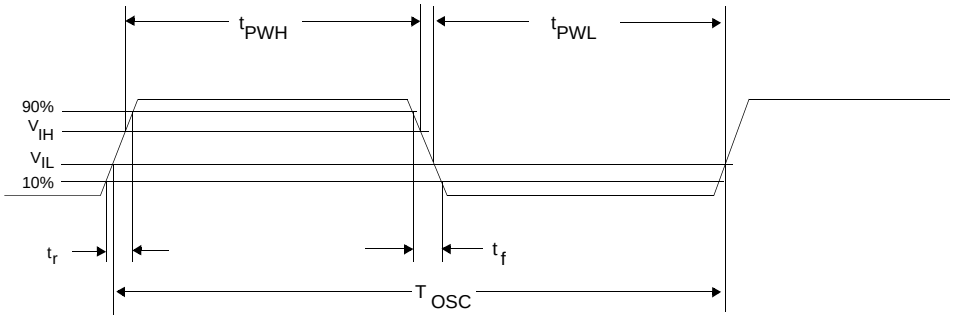

Figure 7-9: Clock Input Requirement

Table 7-9: Clock Input Requirements for BUSCLK using Philips local bus

Symbol	Parameter	Min	Max	Units
T_{OSC}	Input Clock Period)	13.3		ns
t_{PWH}	Input Clock Pulse Width High	6		ns
t_{PWL}	Input Clock Pulse Width Low	6		ns
t_f	Input Clock Fall Time (10% - 90%)		5	ns
t_r	Input Clock Rise Time (10% - 90%)		5	ns

7.1.9 Toshiba Interface Timing (e.g. TX3912)

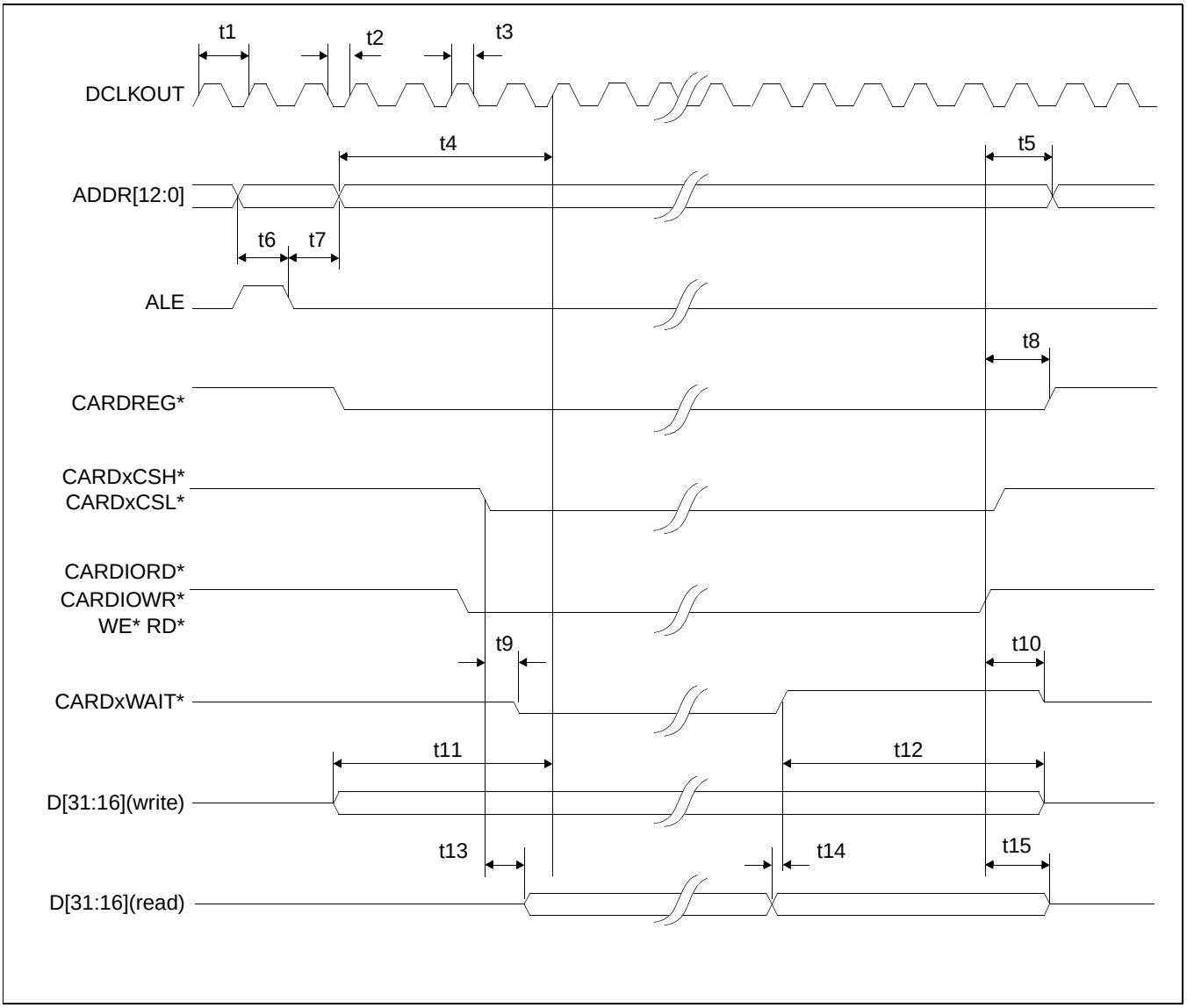

Figure 7-10: Toshiba Timing

Table 7-10: Toshiba Timing

		3.0V		5.0V		
Symbol	**Parameter**	**Min**	**Max**	**Min**	**Max**	**Units**
t1	Clock period	13.3		13.3		ns
t2	Clock pulse width low	5.4		5.4		ns
t3	Clock pulse width high	5.4		5.4		ns
t4	ADDR[12:0] setup to first CLK of cycle	10		10		ns
t5	ADDR[12:0] hold from command invalid	0		0		ns
t6	ADDR[12:0] setup to falling edge ALE	10		10		ns
t7	ADDR[12:0] hold from falling edge ALE	5		5		ns
t8	CARDREG* hold from command invalid	0		0		ns
t9[1]	Falling edge of chip select to CARDxWAIT* driven	0	15	0	9	ns
t10	Command invalid to CARDxWAIT* tri-state	5	25	2.5	10	ns
t11	D[31:16] valid to first CLK of cycle (write cycle)	10		10		ns
t12	D[31:16] hold from rising edge of CARDxWAIT*	0		0		
t13[2]	Chip select to D[31:16] driven (read cycle)	1		1		ns
t14	D[31:16] setup to rising edge CARDxWAIT* (read cycle)	0		0		ns
t15	Command invalid to D[31:16] tri-state (read cycle)	5	25	2.5	10	ns

1. If the S1D13505 host interface is disabled, the timing for CARDxWAIT* driven is relative to the falling edge of chip select <u>or</u> the second positive edge of DCLKOUT after ADDR[12:0] becomes valid, whichever one is later.

2. If the S1D13505 host interface is disabled, the timing for D[31:16] driven is relative to the falling edge of chip select <u>or</u> the second positive edge of DCLKOUT after ADDR[12:0] becomes valid, whichever one is later.

Note

The Toshiba interface has different clock input requirements as follows:

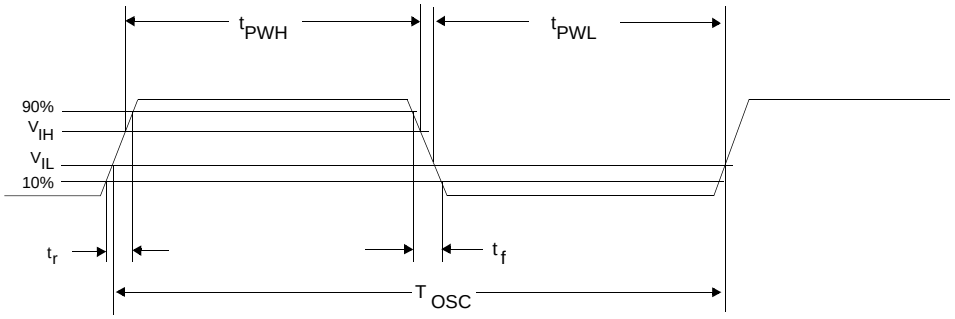

Figure 7-11: Clock Input Requirement

Table 7-11: Clock Input Requirements for BUSCLK using Toshiba local bus

Symbol	Parameter	Min	Max	Units
T_{OSC}	Input Clock Period)	13.3		ns
t_{PWH}	Input Clock Pulse Width High	5.4		ns
t_{PWL}	Input Clock Pulse Width Low	5.4		ns
t_f	Input Clock Fall Time (10% - 90%)		5	ns
t_r	Input Clock Rise Time (10% - 90%)		5	ns

7.1.10 Power PC Interface Timing (e.g. MPC8xx, MC68040, Coldfire)

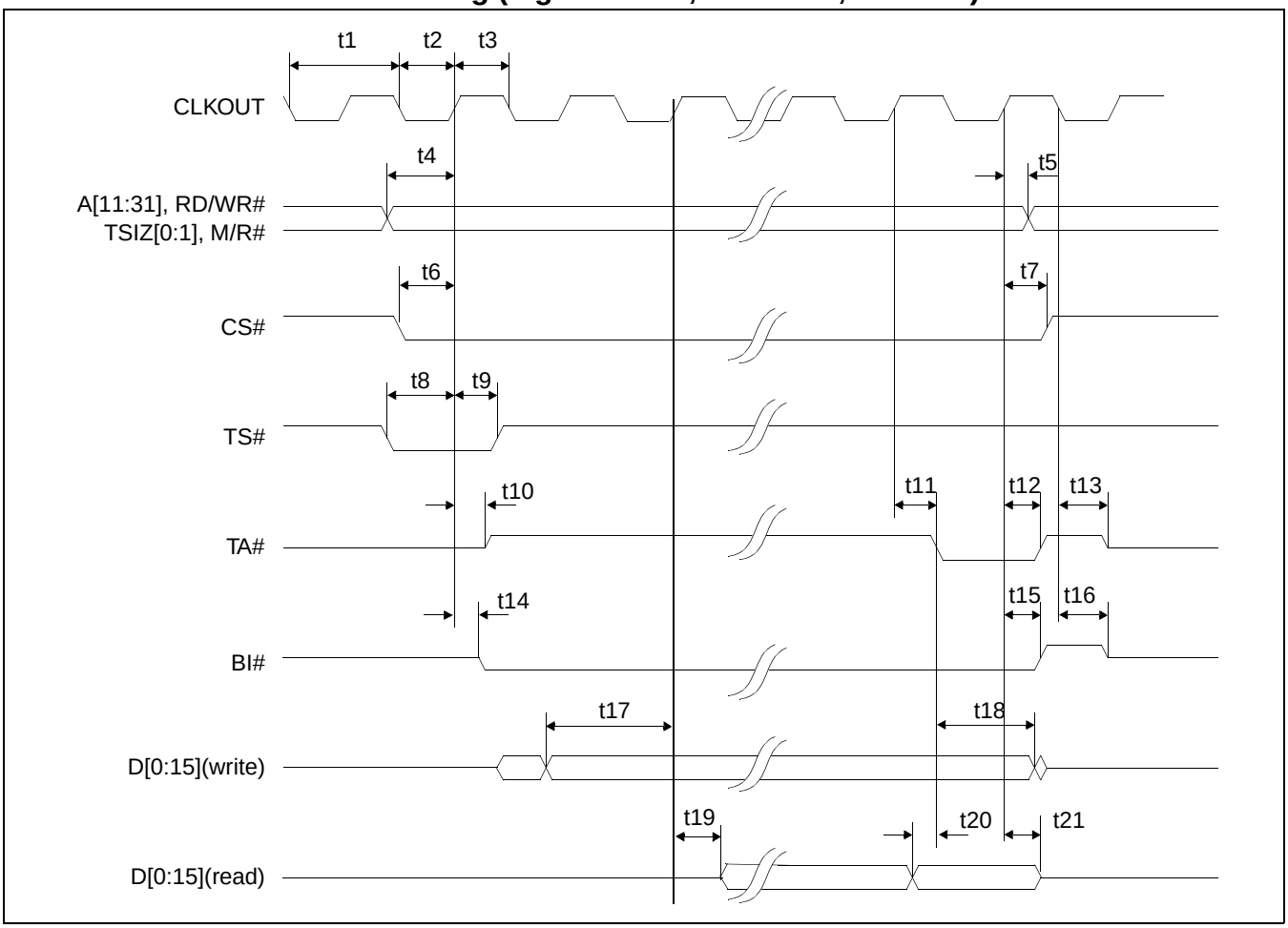

Figure 7-12: Power PC Timing

Note

The above timing diagram is not applicable if the BUSCLK divided by 2 configuration option is selected.

Table 7-12: Power PC Timing

		3.0V		5.0V		
Symbol	**Parameter**	**Min**	**Max**	**Min**	**Max**	**Units**
t1	Clock period	25		20		ns
t2	Clock pulse width low	6		6		ns
t3	Clock pulse width high	6		6		ns
t4	AB[11:31], RD/WR#, TSIZ[0:1], M/R# setup	10		10		ns
t5	AB[11:31], RD/WR#, TSIZ[0:1], M/R# hold	0		0		ns
t6	CS# setup	10		10		ns
t7	CS# hold	0		0		ns
t8	TS# setup	7		10		ns
t9	TS# hold	5		0		ns
t10	CLKOUT to TA# driven	0		0		ns
t11	CLKOUT to TA# low	3	19	3	12	ns
t12	CLKOUT to TA# high	3	19.7	3	13	ns
t13	negative edge CLKOUT to TA# tri-state	5	25	2.5	10	ns
t14	CLKOUT to BI# driven	0	18	0	11	ns
t15	CLKOUT to BI# high	3	16	3	10	ns
t16	negative edge CLKOUT to BI# tri-state	5	25	2.5	10	ns
t17	D[0:15] setup to 2nd CLKOUT after TS# = 0 (write cycle)	10		10		ns
t18	D[0:15] hold (write cycle)	0		0		ns
t19	CLKOUT to D[0:15] driven (read cycle)	0		0		ns
t20	D[0:15] valid to TA# falling edge (read cycle)	0		0		ns
t21	CLKOUT to D[0:15] tri-state (read cycle)	5	25	2.5	10	ns

7.2 Clock Input Requirements

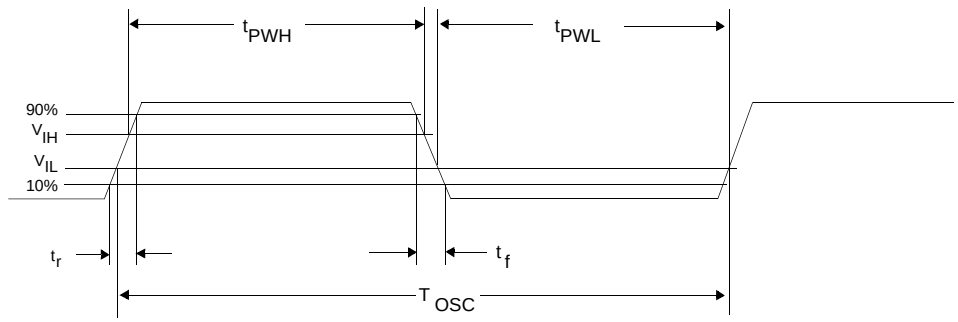

Figure 7-13: Clock Input Requirement

Table 7-13: Clock Input Requirements for CLKI divided down internally (MCLK = CLKI/2)

Symbol	Parameter	Min	Max	Units
T_{OSC}	Input Clock Period	12.5		ns
t_{PWH}	Input Clock Pulse Width High	5.6		ns
t_{PWL}	Input Clock Pulse Width Low	5.6		ns
t_f	Input Clock Fall Time (10% - 90%)		5	ns
t_r	Input Clock Rise Time (10% - 90%)		5	ns

Table 7-14: Clock Input Requirements for CLKI

Symbol	Parameter	Min	Max	Units
T_{OSC}	Input Clock Period	25		ns
t_{PWH}	Input Clock Pulse Width High	11.3		ns
t_{PWL}	Input Clock Pulse Width Low	11.3		ns
t_f	Input Clock Fall Time (10% - 90%)		5	ns
t_r	Input Clock Rise Time (10% - 90%)		5	ns

Note

When CLKI is more than 40MHz, REG[19h] bit 2 must be set to 1 (MCLK = CLKI/2).

7.3 Memory Interface Timing

7.3.1 EDO-DRAM Read/Write/Read-Write Timing

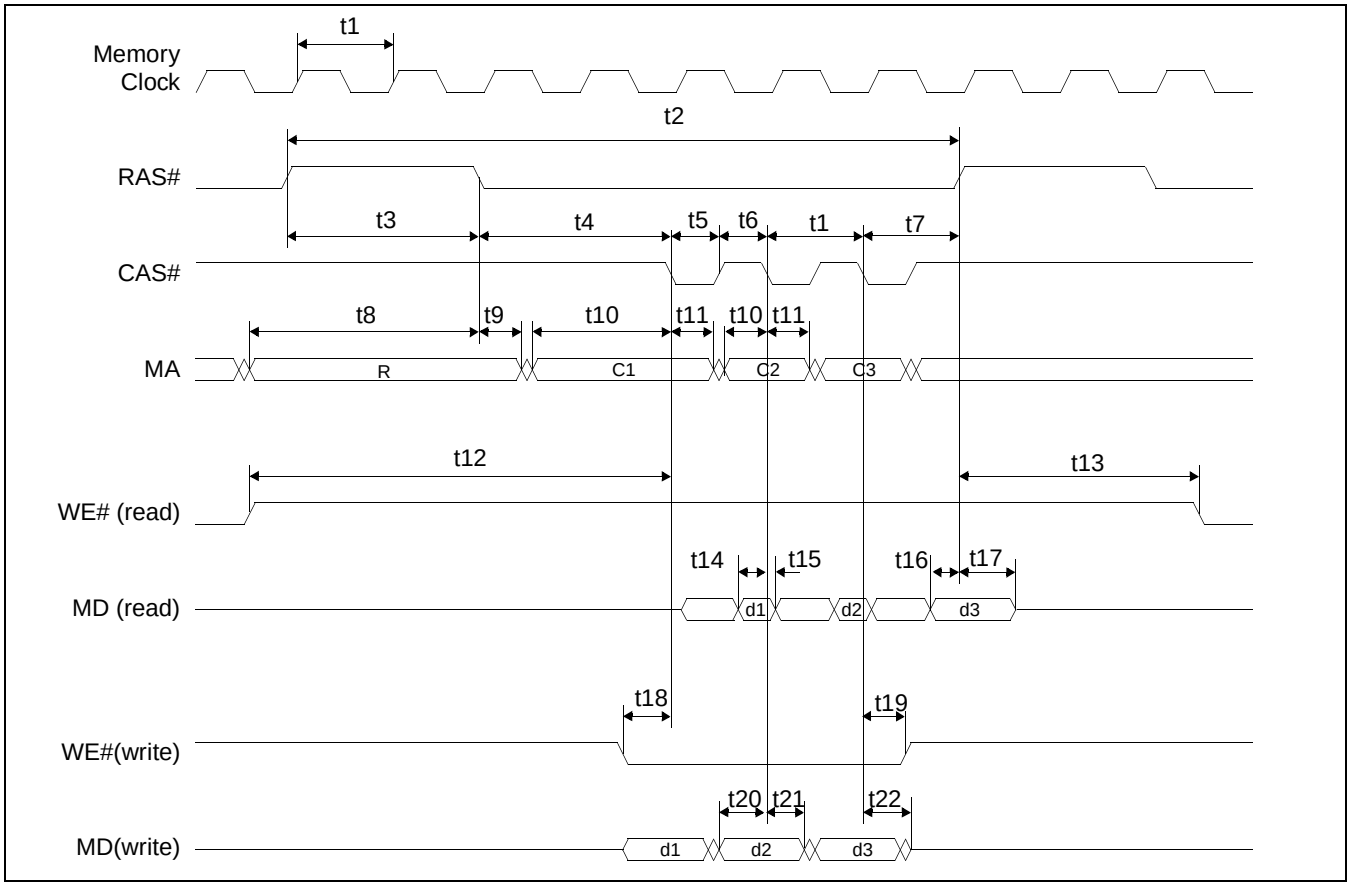

Figure 7-14: EDO-DRAM Read/Write Timing

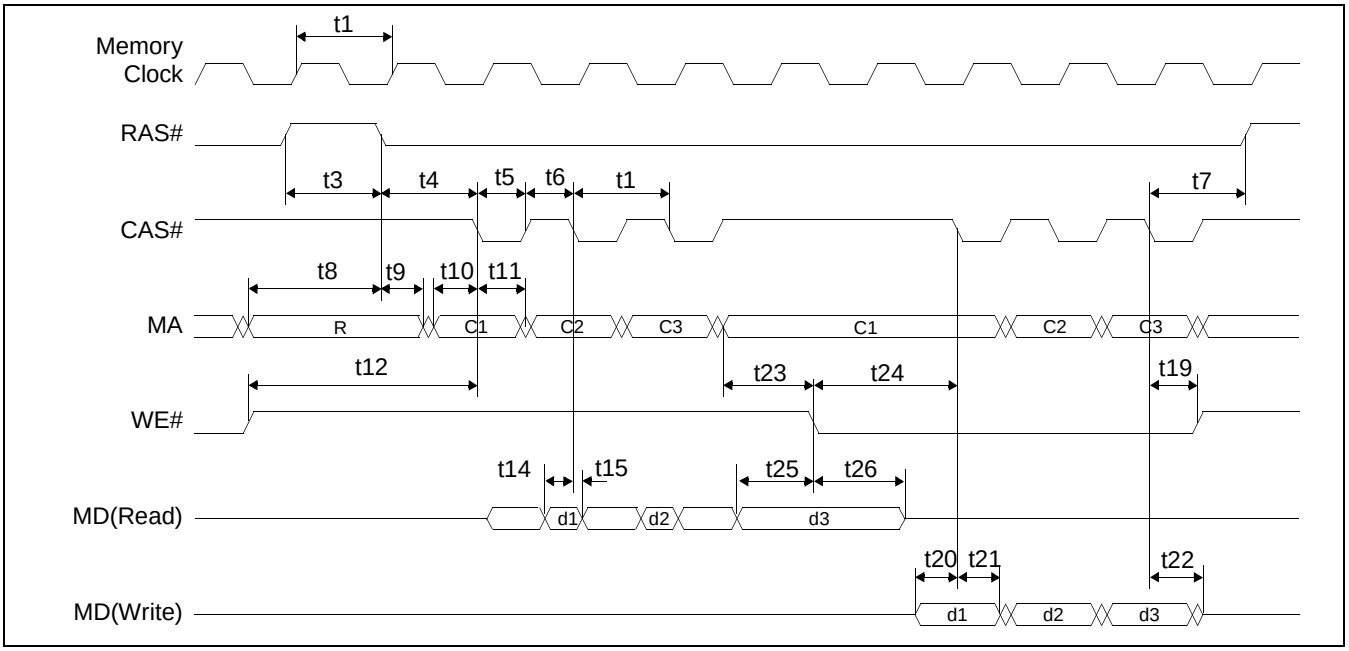

Figure 7-15: EDO-DRAM Read-Write Timing

Table 7-15: EDO-DRAM Read/Write/Read-Write Timing

Symbol	Parameter	Min	Max	Units
t1	Internal memory clock period	25		ns
t2	Random read cycle REG[22h] bit 6-5 == 00	5t1		ns
	Random read cycle REG[22h] bit 6-5 == 01	4t1		ns
	Random read cycle REG[22h] bit 6-5 == 10	3t1		ns
t3	RAS# precharge time (REG[22h] bits 3-2 = 00)	2t1 - 3		ns
	RAS# precharge time (REG[22h] bits 3-2 = 01)	1.45 t1 - 3		ns
	RAS# precharge time (REG[22h] bits 3-2 = 10)	1t1 - 3		ns
t4	RAS# to CAS# delay time (REG[22h] bit 4 = 0 and bits 3-2 = 00 or 10)	2t1 - 3		ns
	RAS# to CAS# delay time (REG[22h] bit 4 = 1 and bits 3-2 = 00 or 10)	1t1 - 3		ns
	RAS# to CAS# delay time (REG[22h] bits 3-2 = 01)	1.45 t1 - 3		ns
t5	CAS# precharge time	0.45 t1 - 3		ns
t6	CAS# pulse width	0.45 t1 - 3		ns
t7	RAS# hold time	1 t1 - 3		ns
t8	Row address setup time (REG[22h] bits 3-2 = 00)	2.45 t1		ns
	Row address setup time (REG[22h] bits 3-2 = 01)	2 t1		ns
	Row address setup time (REG[22h] bits 3-2 = 10)	1.45 t1		ns
t9	Row address hold time (REG[22h] bits 3-2 = 00 or 10)	0.45 t1 - 3		ns
	Row address hold time (REG[22h] bits 3-2 = 01)	1 t1 - 3		ns
t10	Column address setup time	0.45 t1 - 3		ns
t11	Column address hold time	0.45 t1 - 3		ns

Table 7-15: EDO-DRAM Read/Write/Read-Write Timing

Symbol	Parameter	Min	Max	Units
t12	Read Command Setup (REG[22h] bit 4 = 0 and bits 3-2 = 00)	4.45 t1 - 3		ns
	Read Command Setup (REG[22h] bit 4 = 0 and bits 3-2 = 10)	3.45 t1 - 3		ns
	Read Command Setup (REG[22h] bit 4 = 1 and bits 3-2 = 00)	3.45 t1 - 3		ns
	Read Command Setup (REG[22h] bit 4 = 1 and bits 3-2 = 10)	2.45 t1 - 3		ns
	Read Command Setup (REG[22h] bits 3-2 = 01)	3.45 t1 - 3		ns
t13	Read Command Hold (REG[22h] bit 4 = 0 and bits 3-2 = 00)	3.45 t1 - 3		ns
	Read Command Hold (REG[22h] bit 4 = 0 and bits 3-2 = 10)	2.45 t1 - 3		ns
	Read Command Hold (REG[22h] bit 4 = 1 and bits 3-2 = 00)	2.45 t1 - 3		ns
	Read Command Hold (REG[22h] bit 4 = 1 and bits 3-2 = 10)	1.45 t1 - 3		ns
	Read Command Hold (REG[22h] bits 3-2 = 01)	2.45 t1 - 3		ns
t14	Read Data Setup referenced from CAS#	5		ns
t15	Read Data Hold referenced from CAS#	3		ns
t16	Last Read Data Setup referenced from RAS#	5		ns
t17	Bus Turn Off from RAS#	3	t1- 5	ns
t18	Write Command Setup	0.45 t1- 3		ns
t19	Write Command Hold	0.45 t1 - 3		ns
t20	Write Data Setup	0.45 t1 - 3		ns
t21	Write Data Hold	0.45 t1 - 3		ns
t22	MD Tri-state	0.45 t1	0.45t1 + 21	ns
t23	CAS# to WE# active during Read-Write cycle	1 t1 - 3		ns
t24	Write Command Setup during Read-Write cycle	1.45 t1- 3		ns
t25	Last Read Data Setup referenced from WE# during Read-Write cycle	10		ns
t26	Bus Tri-state from WE# during Read-Write cycle	0	t1- 5	ns

7.3.2 EDO-DRAM CAS Before RAS Refresh Timing

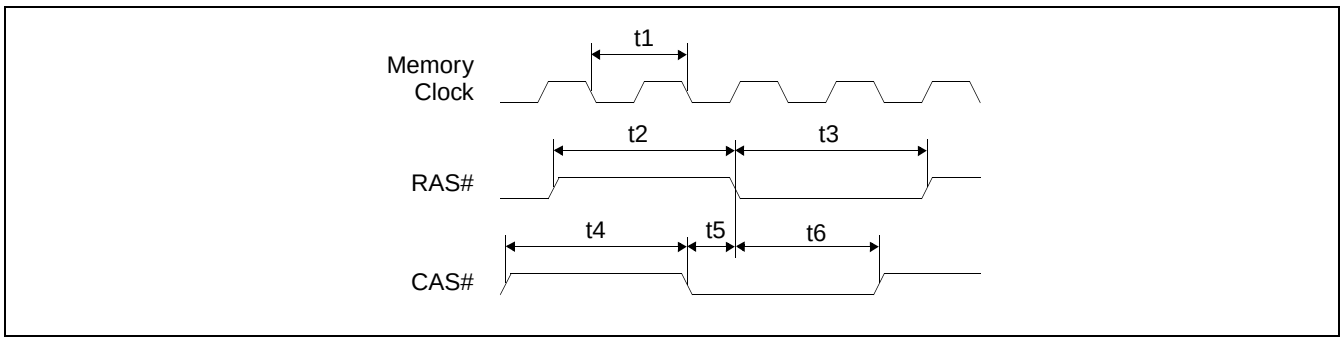

Figure 7-16: EDO-DRAM CAS Before RAS Refresh Timing

Table 7-16: EDO-DRAM CAS Before RAS Refresh Timing

Symbol	Parameter	Min	Max	Units
t1	Internal memory clock period	25		ns
t2	RAS# precharge time (REG[22h] bits 3-2 = 00)	2t1 - 3		ns
	RAS# precharge time (REG[22h] bits 3-2 = 01)	1.45t1 - 3		ns
	RAS# precharge time (REG[22h] bits 3-2 = 10)	1t1 - 3		ns
t3	RAS# pulse width (REG[22h] bit 6-5 = 00 and bits 3-2 = 00)	3 t1 - 3		ns
	RAS# pulse width (REG[22h] bit 6-5 = 00 and bits 3-2 = 01)	3.45 t1 - 3		ns
	RAS# pulse width (REG[22h] bit 6-5 = 00 and bits 3-2 = 10)	4 t1 - 3		ns
	RAS# pulse width (REG[22h] bit 6-5 = 01 and bits 3-2 = 00)	2 t1 - 3		ns
	RAS# pulse width (REG[22h] bit 6-5 = 01 and bits 3-2 = 01)	2.45 t1 - 3		ns
	RAS# pulse width (REG[22h] bit 6-5 = 01 and bits 3-2 = 10)	3 t1 - 3		ns
	RAS# pulse width (REG[22h] bit 6-5 = 10 and bits 3-2 = 00)	1 t1 - 3		ns
	RAS# pulse width (REG[22h] bit 6-5 = 10 and bits 3-2 = 01)	1.45 t1 - 3		ns
	RAS# pulse width (REG[22h] bit 6-5 = 10 and bits 3-2 = 10)	2 t1 - 3		ns
t4	CAS# pulse width	t2		ns
t5	CAS# setup time (REG[22h] bits 3-2 = 00 or 10)	0.45 t1 - 3		ns
	CAS# setup time (REG[22h] bits 3-2 = 01)	1 t1 - 3		ns

Table 7-16: EDO-DRAM CAS Before RAS Refresh Timing

Symbol	Parameter	Min	Max	Units
t6	CAS# Hold to RAS# (REG[22h] bit 6-5 = 00 and bits 3-2 = 00)	2.45 t1 - 3		ns
	CAS# Hold to RAS# (REG[22h] bit 6-5 = 00 and bits 3-2 = 01)	3 t1 - 3		ns
	CAS# Hold to RAS# (REG[22h] bit 6-5 = 00 and bits 3-2 = 10)	3.45 t1 - 3		ns
	CAS# Hold to RAS# (REG[22h] bit 6-5 = 01 and bits 3-2 = 00)	1.45 t1 - 3		ns
	CAS# Hold to RAS# (REG[22h] bit 6-5 = 01 and bits 3-2 = 01)	2 t1 - 3		ns
	CAS# Hold to RAS# (REG[22h] bit 6-5 = 01 and bits 3-2 = 10)	2.45 t1 - 3		ns
	CAS# Hold to RAS# (REG[22h] bit 6-5 = 10 and bits 3-2 = 00)	0.45 t1 - 3		ns
	CAS# Hold to RAS# (REG[22h] bit 6-5 = 10 and bits 3-2 = 01)	1 t1 - 3		ns
	CAS# Hold to RAS# (REG[22h] bit 6-5 = 10 and bits 3-2 = 10)	1.45 t1 - 3		ns

7.3.3 EDO-DRAM Self-Refresh Timing

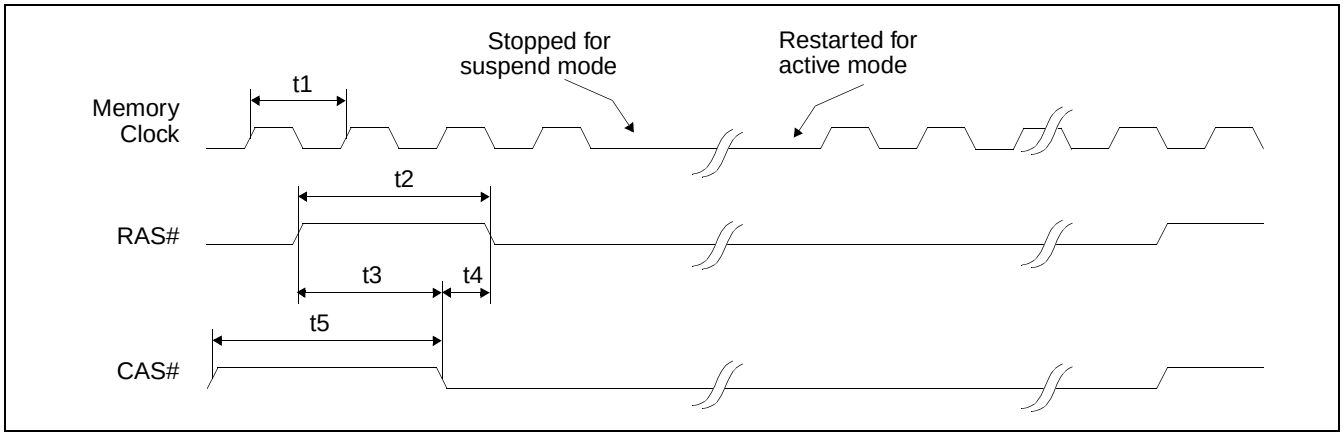

Figure 7-17: EDO-DRAM Self-Refresh Timing

Table 7-17: EDO-DRAM Self-Refresh Timing

Symbol	Parameter	Min	Max	Units
t1	Internal memory clock period	25		ns
t2	RAS# precharge time (REG[22h] bits 3-2 = 00)	2 t1 - 3		ns
	RAS# precharge time (REG[22h] bits 3-2 = 01)	1.45t1 - 3		ns
	RAS# precharge time (REG[22h] bits 3-2 = 10)	1 t1 - 3		ns
t3	RAS# to CAS# precharge time (REG[22h] bits 3-2 = 00)	1.45t1 - 3		ns
	RAS# to CAS# precharge time (REG[22h] bits 3-2 = 01 or 10)	0.45t1 - 3		ns
t4	CAS# setup time (REG[22h] bits 3-2 = 00 or 10)	0.45t1 - 3		ns
	CAS# setup time (REG[22h] bits 3-2 = 01)	1 t1 - 3		ns
t5	CAS# precharge time (REG[22h] bits 3-2 = 00)	2 t1 - 3		ns
	CAS# precharge time (REG[22h] bits 3-2 = 01 or 10)	1 t1 - 3		ns

7.3.4 FPM-DRAM Read/Write/Read-Write Timing

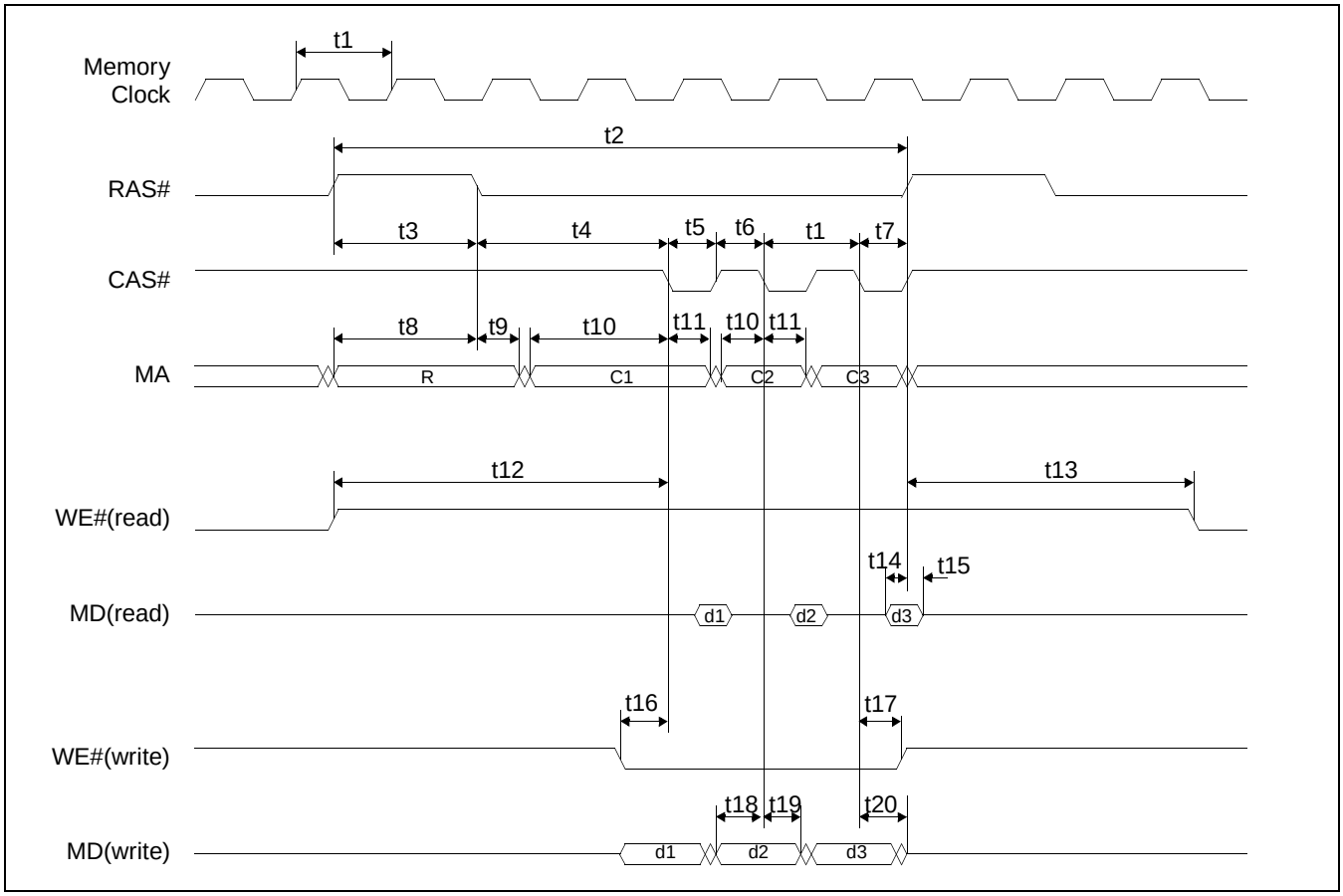

Figure 7-18: FPM-DRAM Read/Write Timing

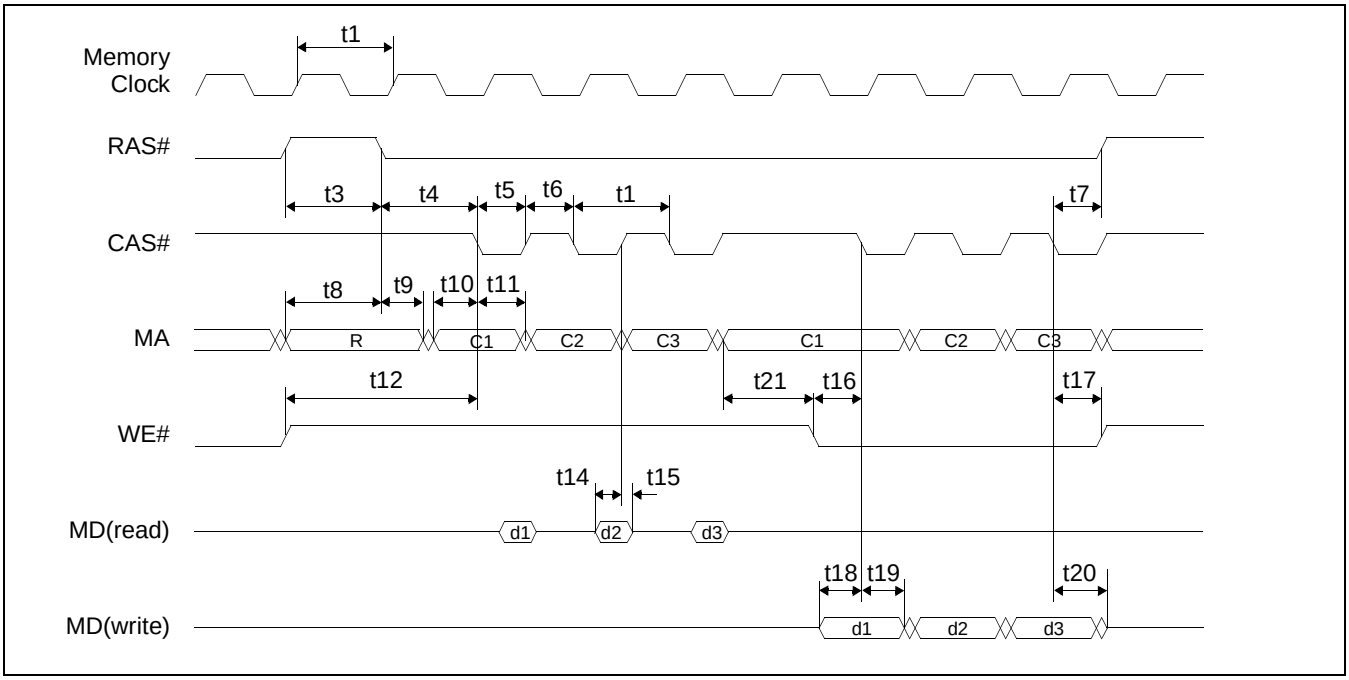

Figure 7-19: FPM-DRAM Read-Write Timing

Table 7-18: FPM-DRAM Read/Write/Read-Write Timing

Symbol	Parameter	Min	Max	Units
t1	Internal memory clock period	40		ns
t2	Random read cycle REG[22h] bit 6-5 == 00	5t1		ns
	Random read cycle REG[22h] bit 6-5 == 01	4t1		ns
	Random read cycle REG[22h] bit 6-5 == 10	3t1		ns
t3	RAS# precharge time (REG[22h] bits 3-2 = 00)	2 t1 - 3		ns
	RAS# precharge time (REG[22h] bits 3-2 = 01)	1.45 t1 - 3		ns
	RAS# precharge time (REG[22h] bits 3-2 = 10)	1 t1 - 3		ns
t4	RAS# to CAS# delay time (REG[22h] bit 4 = 1 and bits 3-2 = 00 or 10)	1.45 t1 - 3		ns
	RAS# to CAS# delay time (REG[22h] bit 4 = 0 and bits 3-2 = 00 or 10)	2.45 t1 - 3		ns
	RAS# to CAS# delay time (REG[22h] bit 4 = 1 and bits 3-2 = 01)	1t1 - 3		ns
	RAS# to CAS# delay time (REG[22h] bit 4 = 0 and bits 3-2 = 01)	2t1 - 3		ns
t5	CAS# precharge time	0.45 t1 - 3		ns
t6	CAS# pulse width	0.45 t1 - 3		ns
t7	RAS# hold time	0.45 t1 - 3		ns
t8	Row address setup time (REG[22h] bits 3-2 = 00)	2 t1 - 3		ns
	Row address setup time (REG[22h] bits 3-2 = 01)	1.45 t1 - 3		ns
	Row address setup time (REG[22h] bits 3-2 = 10)	1 t1 - 3		ns

Table 7-18: FPM-DRAM Read/Write/Read-Write Timing

Symbol	Parameter	Min	Max	Units
t9	Row address hold time (REG[22h] bits 3-2 = 00 or 10)	t1 - 3		ns
	Row address hold time (REG[22h] bits 3-2 = 01)	0.45 1t1 - 3		ns
t10	Column address setup time	0.45 t1 - 3		ns
t11	Column address hold time	0.45 t1 - 3		ns
t12	Read Command Setup (REG[22h] bit 4 = 0 and bits 3-2 = 00)	4.45 t1 - 3		ns
	Read Command Setup (REG[22h] bit 4 = 0 and bits 3-2 = 01 or 10)	3.45 t1 - 3		ns
	Read Command Setup (REG[22h] bit 4 = 1 and bits 3-2 = 00)	3.45 t1 - 3		ns
	Read Command Setup (REG[22h] bit 4 = 1 and bits 3-2 = 01 or 10)	2.45 t1 - 3		ns
t13	Read Command Hold (REG[22h] bit 4 = 0 and bits 3-2 = 00)	4 t1 - 3		ns
	Read Command Hold (REG[22h] bit 4 = 0 and bits 3-2 = 01 or 10)	3 t1 - 3		ns
	Read Command Hold (REG[22h] bit 4 = 1 and bits 3-2 = 00)	3 t1 - 3		ns
	Read Command Hold (REG[22h] bit 4 = 1 and bits 3-2 = 01 or 10)	2 t1 - 3		ns
t14	Read Data Setup referenced from CAS#	5		ns
t15	Bus Tri-State	3	t1- 5	ns
t16	Write Command Setup	0.45 t1- 3		ns
t17	Write Command Hold	0.45 t1 - 3		ns
t18	Write Data Setup	0.45 t1 - 3		ns
t19	Write Data Hold	0.45 t1 - 3		ns
t20	MD Tri-state	0.45 t1	0.45t1 + 21	ns
t21	CAS# to WE# active during Read-Write cycle	0.45 t1 - 3		ns

7.3.5 FPM-DRAM CAS Before RAS Refresh Timing

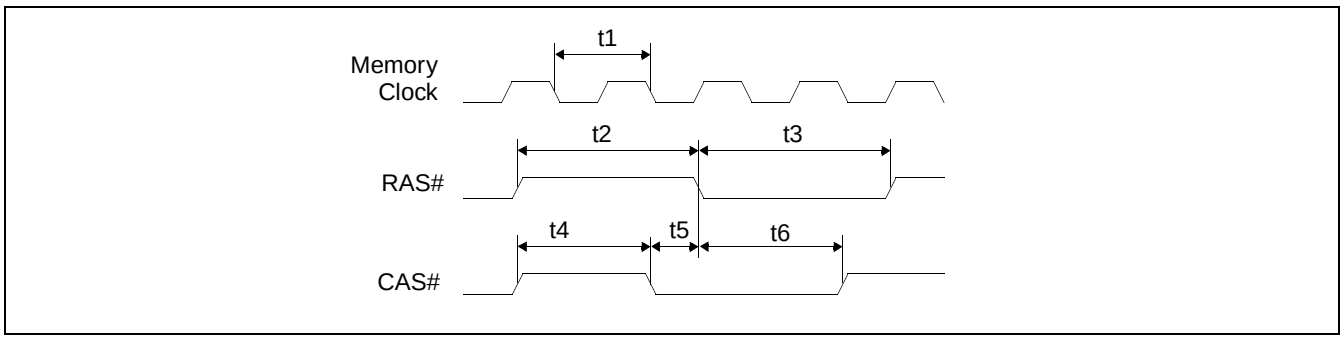

Figure 7-20: FPM-DRAM CAS Before RAS Refresh Timing

Table 7-19: FPM-DRAM CAS Before RAS Refresh Timing

Symbol	Parameter	Min	Max	Units
t1	Internal memory clock period	40		ns
t2	RAS# precharge time (REG[22h] bits 3-2 = 00)	2.45 t1 - 3		ns
	RAS# precharge time (REG[22h] bits 3-2 = 01 or 10)	1.45 t1 - 3		ns
t3	RAS# pulse width (REG[22h] bits 6-5 = 00 and bits 3-2 = 00)	2.45 t1 - 3		ns
	RAS# pulse width (REG[22h] bits 6-5 = 00 and bits 3-2 = 01 or 10)	3.45 t1 - 3		ns
	RAS# pulse width (REG[22h] bits 6-5 = 01 and bits 3-2 = 00)	1.45 t1 - 3		ns
	RAS# pulse width (REG[22h] bits 6-5 = 01 and bits 3-2 = 01 or 10)	2.45 t1 - 3		ns
	RAS# pulse width (REG[22h] bits 6-5 = 10 and bits 3-2 = 00)	0.45 t1 - 3		ns
	RAS# pulse width (REG[22h] bits 6-5 = 10 and bits 3-2 = 01 or 10)	1.45 t1 - 3		ns
t4	CAS# pulse width (REG[22h] bits 3-2 = 00)	2 t1 - 3		ns
	CAS# pulse width (REG[22h] bits 3-2 = 01 or 10)	1 t1 - 3		
t5	CAS# Setup to RAS#	0.45 t1 - 3		ns
t6	CAS# Hold to RAS# (REG[22h] bits 6-5 = 00 and bits 3-2 = 00)	2.45 t1 - 3		ns
	CAS# Hold to RAS# (REG[22h] bits 6-5 = 00 and bits 3-2 = 01 or 10)	3.45 t1 - 3		ns
	CAS# Hold to RAS# (REG[22h] bits 6-5 = 01 and bits 3-2 = 00)	1.45 t1 - 3		ns
	CAS# Hold to RAS# (REG[22h] bits 6-5 = 01 and bits 3-2 = 01 or 10)	2.45 t1 - 3		ns
	CAS# Hold to RAS# (REG[22h] bits 6-5 = 10 and bits 3-2 = 00)	0.45 t1 - 3		ns
	CAS# Hold to RAS# (REG[22h] bits 6-5 = 10 and bits 3-2 = 01 or 10)	1.45 t1 - 3		ns

7.3.6 FPM-DRAM Self-Refresh Timing

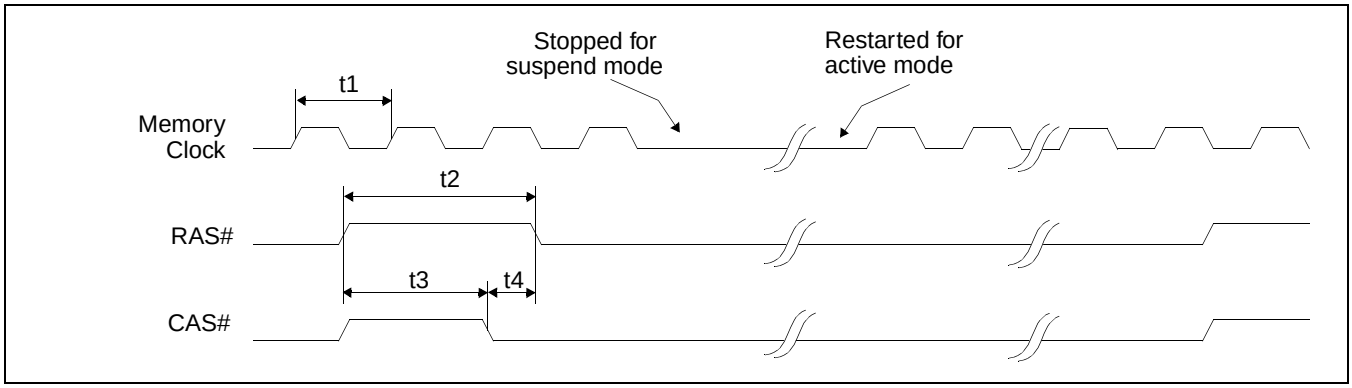

Figure 7-21: FPM-DRAM Self-Refresh Timing

Table 7-20: FPM-DRAM CBR Self-Refresh Timing

Symbol	Parameter	Min	Max	Units
t1	Internal memory clock	40		ns
t2	RAS# precharge time (REG[22h] bits 3-2 = 00)	2.45 t1 - 1		ns
	RAS# precharge time (REG[22h] bits 3-2 = 01 or 10)	1.45 t1 - 1		ns
t3	RAS# to CAS# precharge time (REG[22h] bits 3-2 = 00)	2 t1		ns
	RAS# to CAS# precharge time (REG[22h] bits 3-2 = 01 or 10)	1 t1		ns
t4	CAS# setup time (CAS# before RAS# refresh)	0.45 t1 - 2		ns

7.4 Power Sequencing

7.4.1 LCD Power Sequencing

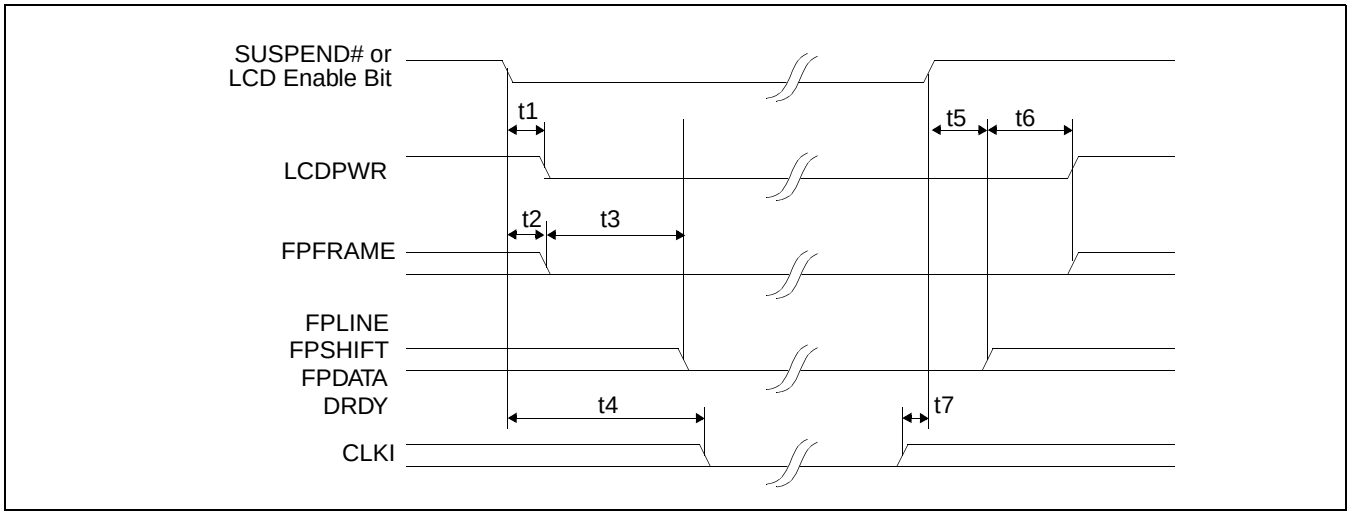

Figure 7-22: LCD Panel Power Off / Power On Timing. Drawn with LCDPWR set to active high polarity

Table 7-21: LCD Panel Power Off/ Power On

Symbol	Parameter	Min	Max	Units
t1	SUSPEND# or LCD ENABLE BIT low to LCDPWR off		$2T_{FPFRAME}$ + $8T_{PCLK}$	ns
t2	SUSPEND# or LCD ENABLE BIT low to FPFRAME inactive		1	Frames
t3	FPFRAME inactive to FPLINE, FPSHIFT, FPDATA, DRDY inactive	128		Frames
t4	SUSPEND# to CLKI inactive	130		Frames
t5	SUSPEND# or LCD ENABLE BIT high to FPLINE, FPSHIFT, FPDATA, DRDY active		$T_{FPFRAME}$ + $8T_{PCLK}$	ns
t6	FPLINE, FPSHIFT, FPDATA, DRDY active to LCDPWR, on and FPFRAME active	128		Frames
t7	CLKI active to SUSPEND# inactive	0		ns

Note

Where $T_{FPFRAME}$ is the period of FPFRAME and T_{PCLK} is the period of the pixel clock.

7.4.2 Power Save Status

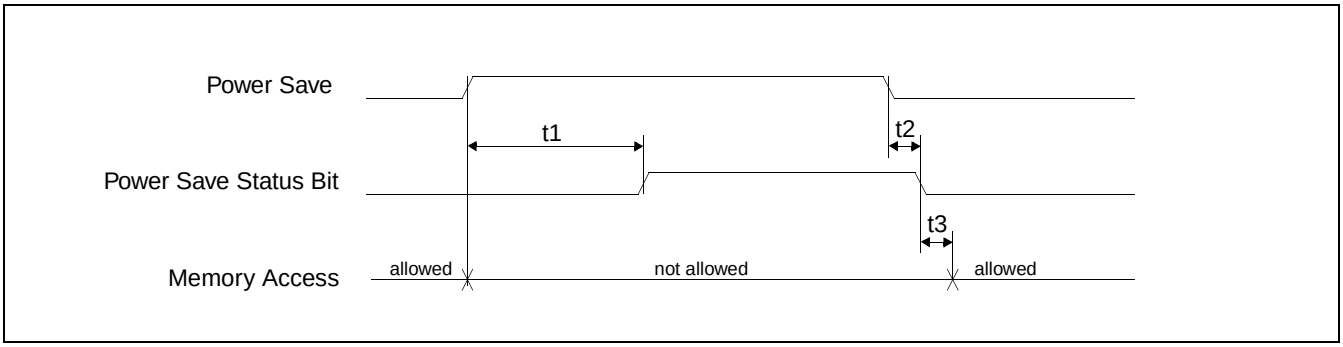

Figure 7-23: Power Save Status and Local Bus Memory Access Relative to Power Save Mode

Note

Power Save can be initiated through either the SUSPEND# pin or Software Suspend Enable Bit.

Table 7-22: Power Save Status and Local Bus Memory Access Relative to Power Save Mode

Symbol	Parameter	Min	Max	Units
t1	Power Save initiated to rising edge of Power Save Status and the last time memory access by the local bus may be performed.	129	130	Frames
t2	Power Save deactivated to falling edge of Power Save Status		12	MCLK
t3	Falling edge of Power Save Status to the earliest time the local bus may perform a memory access		8	MCLK

Note

It is recommended that memory access not be performed after a Power Save Mode has been initiated.

7.5 Display Interface

7.5.1 4-Bit Single Monochrome Passive LCD Panel Timing

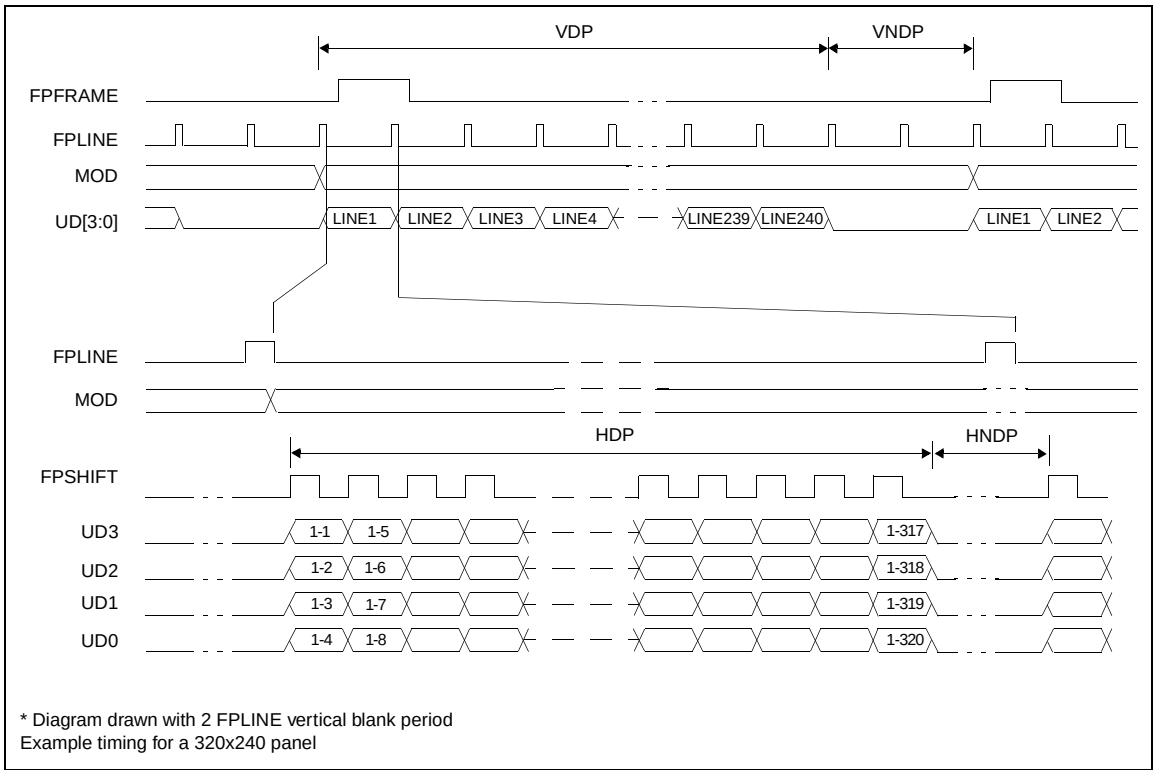

Figure 7-24: 4-Bit Single Monochrome Passive LCD Panel Timing

VDP =	Vertical Display Period	= (REG[09h] bits [1:0], REG[08h] bits [7:0]) + 1
VNDP =	Vertical Non-Display Period	= (REG[0Ah] bits [5:0]) + 1
HDP =	Horizontal Display Period	= ((REG[04h] bits [6:0]) + 1)*8Ts
HNDP =	Horizontal Non-Display Period	= ((REG[05h] bits [4:0]) + 1)*8Ts

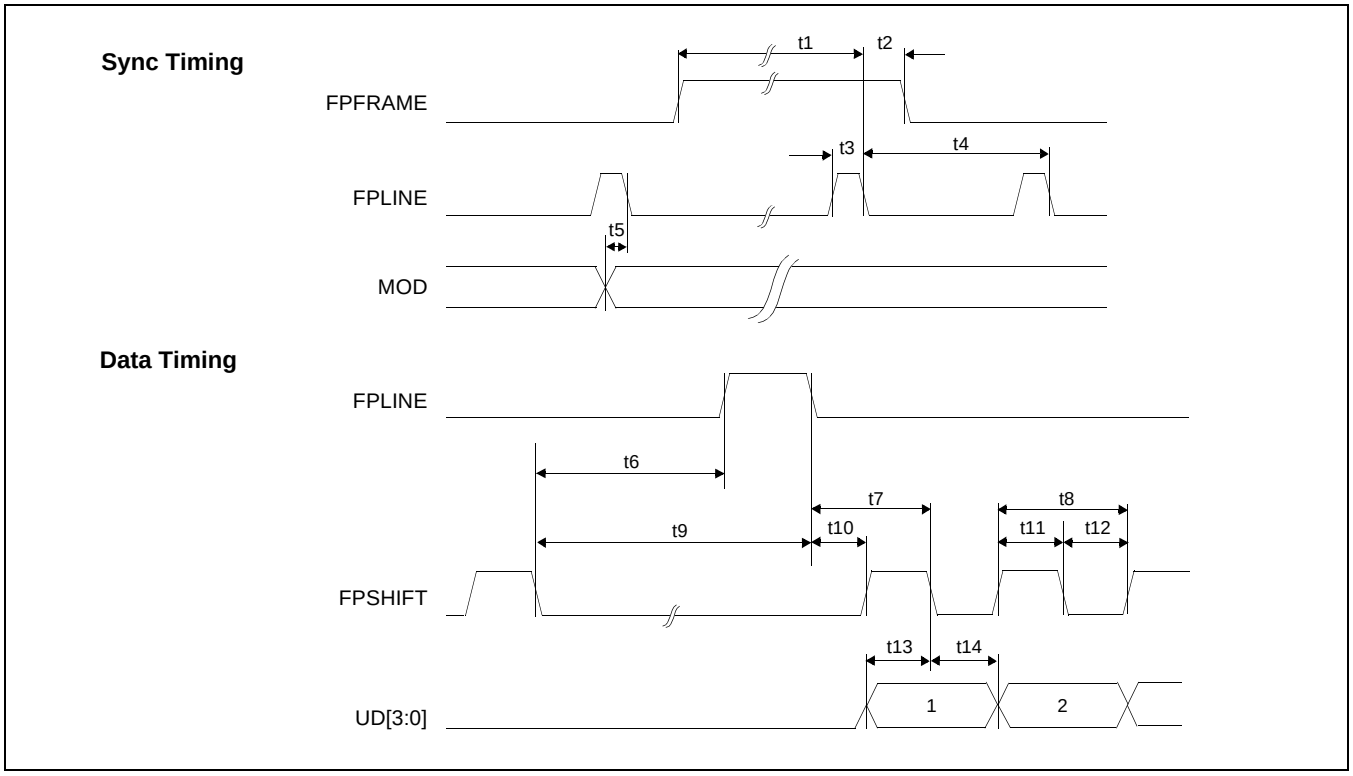

Figure 7-25: 4-Bit Single Monochrome Passive LCD Panel A.C. Timing

Table 7-23: 4-Bit Single Monochrome Passive LCD Panel A.C. Timing

Symbol	Parameter	Min	Typ	Max	Units
t1	FPFRAME setup to FPLINE pulse trailing edge	note 2			
t2	FPFRAME hold from FPLINE pulse trailing edge	14			Ts (note 1)
t3	FPLINE pulse width	9			Ts
t4	FPLINE period	note 3			
t5	MOD transition to FPLINE pulse trailing edge	1		note 4	Ts
t6	FPSHIFT falling edge to FPLINE pulse leading edge	note 5			
t7	FPLINE pulse trailing edge to FPSHIFT falling edge	t10 + t11			Ts
t8	FPSHIFT period	4			Ts
t9	FPSHIFT falling edge to FPLINE pulse trailing edge	note 6			
t10	FPLINE pulse trailing edge to FPSHIFT rising edge	20			Ts
t11	FPSHIFT pulse width high	2			Ts
t12	FPSHIFT pulse width low	2			Ts
t13	UD[3:0] setup to FPSHIFT falling edge	2			Ts
t14	UD[3:0] hold to FPSHIFT falling edge	2			Ts

1. Ts = pixel clock period = memory clock, [memory clock]/2, [memory clock]/3, [memory clock]/4 (see REG[19h] bits [1:0])
2. $t1_{min}$ = $t4_{min}$ - 14Ts
3. $t4_{min}$ = [((REG[04h] bits [6:0])+1)*8 + ((REG[05h] bits [4:0]) + 1)*8] + 33 Ts
4. $t5_{min}$ = [(((REG[04h] bits [6:0])+1)*8 + ((REG[05h] bits [4:0]) + 1)*8)-1] Ts
5. $t6_{min}$ = [((REG[05h] bits [4:0]) + 1)*8 - 27] Ts
6. $t9_{min}$ = [((REG[05h] bits [4:0]) + 1)*8 - 18] Ts

7.5.2 8-Bit Single Monochrome Passive LCD Panel Timing

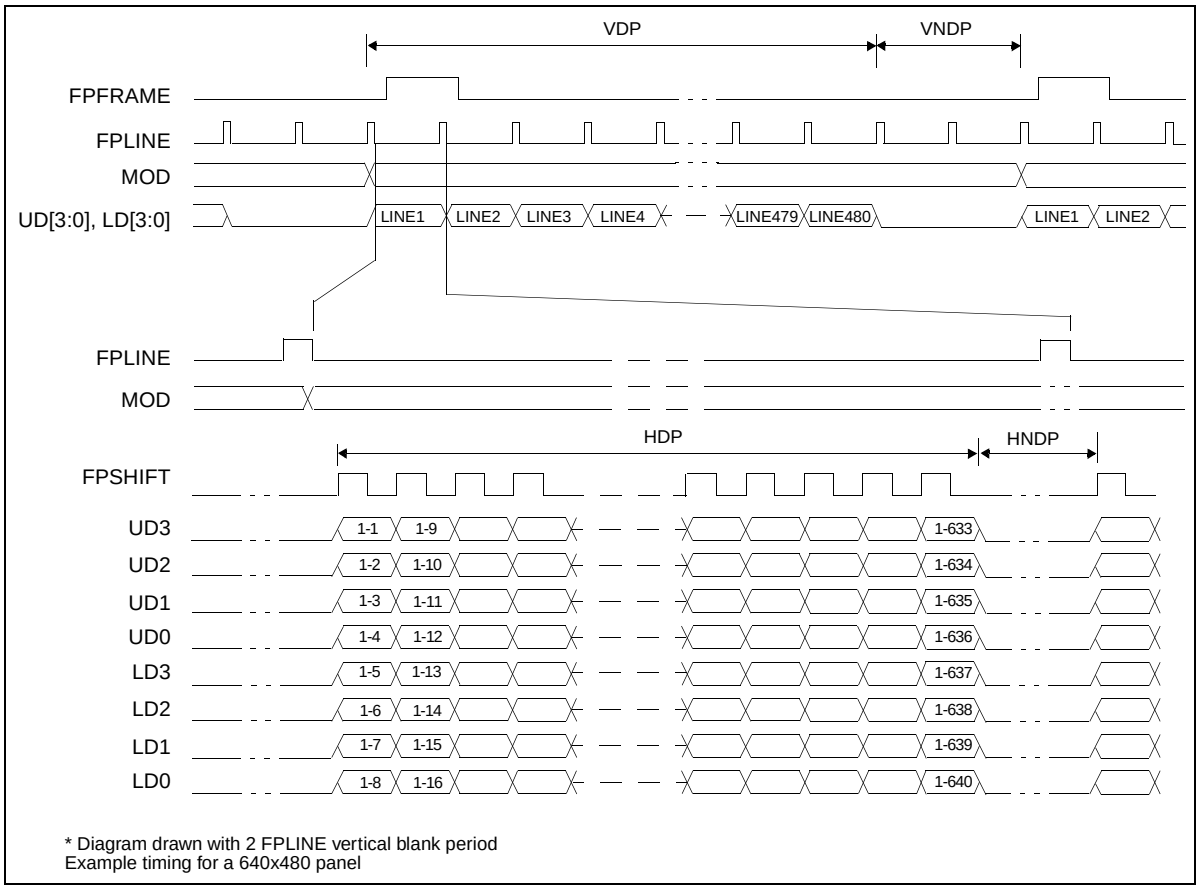

Figure 7-26: 8-Bit Single Monochrome Passive LCD Panel Timing

VDP	= Vertical Display Period	= (REG[09h] bits [1:0], REG[08h] bits [7:0]) + 1
VNDP	= Vertical Non-Display Period	= (REG[0Ah] bits [5:0]) + 1
HDP	= Horizontal Display Period	= ((REG[04h] bits [6:0]) + 1)*8Ts
HNDP	= Horizontal Non-Display Period	= ((REG[05h] bits [4:0]) + 1)*8Ts

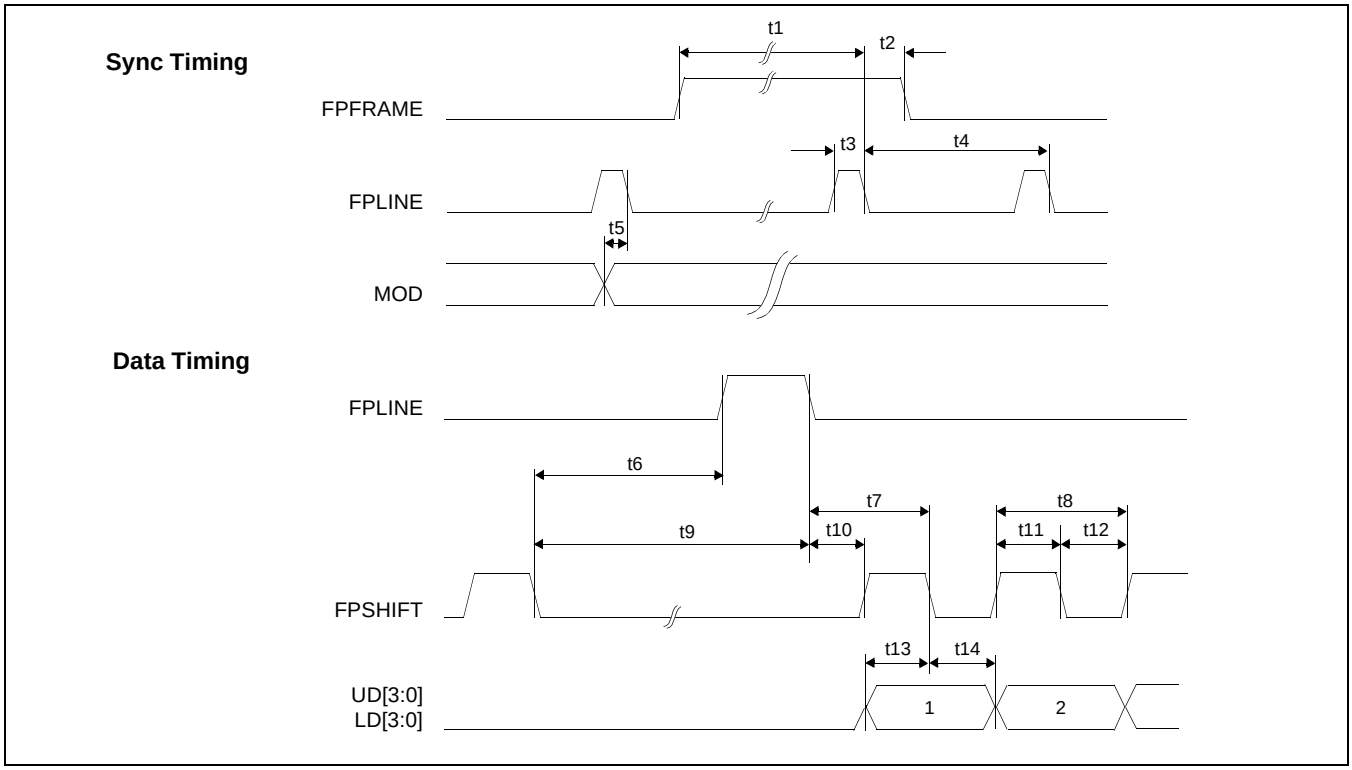

Figure 7-27: 8-Bit Single Monochrome Passive LCD Panel A.C. Timing

Table 7-24: 8-Bit Single Monochrome Passive LCD Panel A.C. Timing

Symbol	Parameter	Min	Typ	Max	Units
t1	FPFRAME setup to FPLINE pulse trailing edge	note 2			
t2	FPFRAME hold from FPLINE pulse trailing edge	14			Ts (note 1)
t3	FPLINE pulse width	9			Ts
t4	FPLINE period	note 3			
t5	MOD transition to FPLINE pulse trailing edge	1		note 4	Ts
t6	FPSHIFT falling edge to FPLINE pulse leading edge	note 5			
t7	FPLINE pulse trailing edge to FPSHIFT falling edge	t10 + t11			Ts
t8	FPSHIFT period	8			Ts
t9	FPSHIFT falling edge to FPLINE pulse trailing edge	note 6			
t10	FPLINE pulse trailing edge to FPSHIFT rising edge	20			Ts
t11	FPSHIFT pulse width high	4			Ts
t12	FPSHIFT pulse width low	4			Ts
t13	UD[3:0], LD[3:0] setup to FPSHIFT falling edge	4			Ts
t14	UD[3:0], LD[3:0] hold to FPSHIFT falling edge	4			Ts

1. Ts = pixel clock period = memory clock, [memory clock]/2, [memory clock]/3, [memory clock]/4 (see REG[19h] bits [1:0])
2. $t1_{min}$ = $t4_{min}$ - 14Ts
3. $t4_{min}$ = [((REG[04h] bits [6:0])+1)*8 + ((REG[05h] bits [4:0]) + 1)*8] + 33 Ts
4. $t5_{min}$ = [(((REG[04h] bits [6:0])+1)*8 + ((REG[05h] bits [4:0]) + 1)*8)-1] Ts
5. $t6_{min}$ = [((REG[05h] bits [4:0]) + 1)*8 - 25] Ts
6. $t9_{min}$ = [((REG[05h] bits [4:0]) + 1)*8 - 16] Ts

7.5.3 4-Bit Single Color Passive LCD Panel Timing

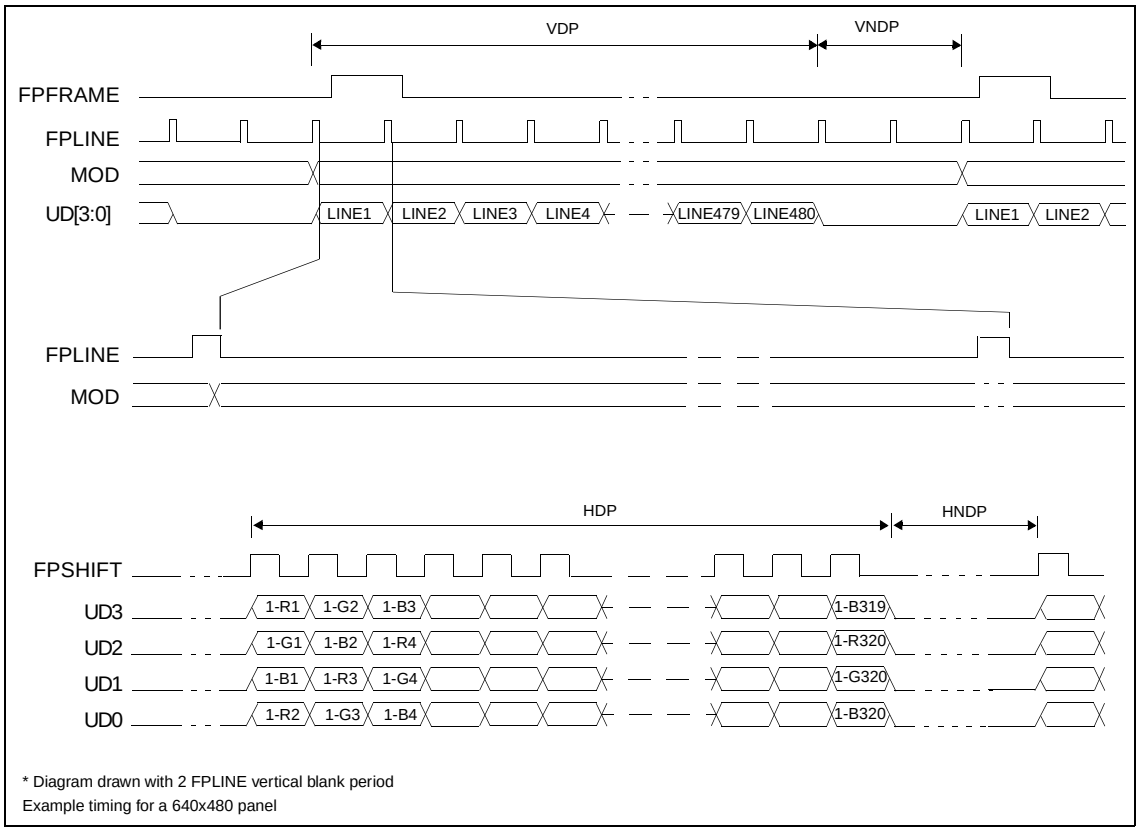

Figure 7-28: 4-Bit Single Color Passive LCD Panel Timing

VDP	= Vertical Display Period	= (REG[09h] bits [1:0], REG[08h] bits [7:0]) + 1
VNDP	= Vertical Non-Display Period	= (REG[0Ah] bits [5:0]) + 1
HDP	= Horizontal Display Period	= ((REG[04h] bits [6:0]) + 1)*8Ts
HNDP	= Horizontal Non-Display Period	= ((REG[05h] bits [4:0]) + 1)*8Ts

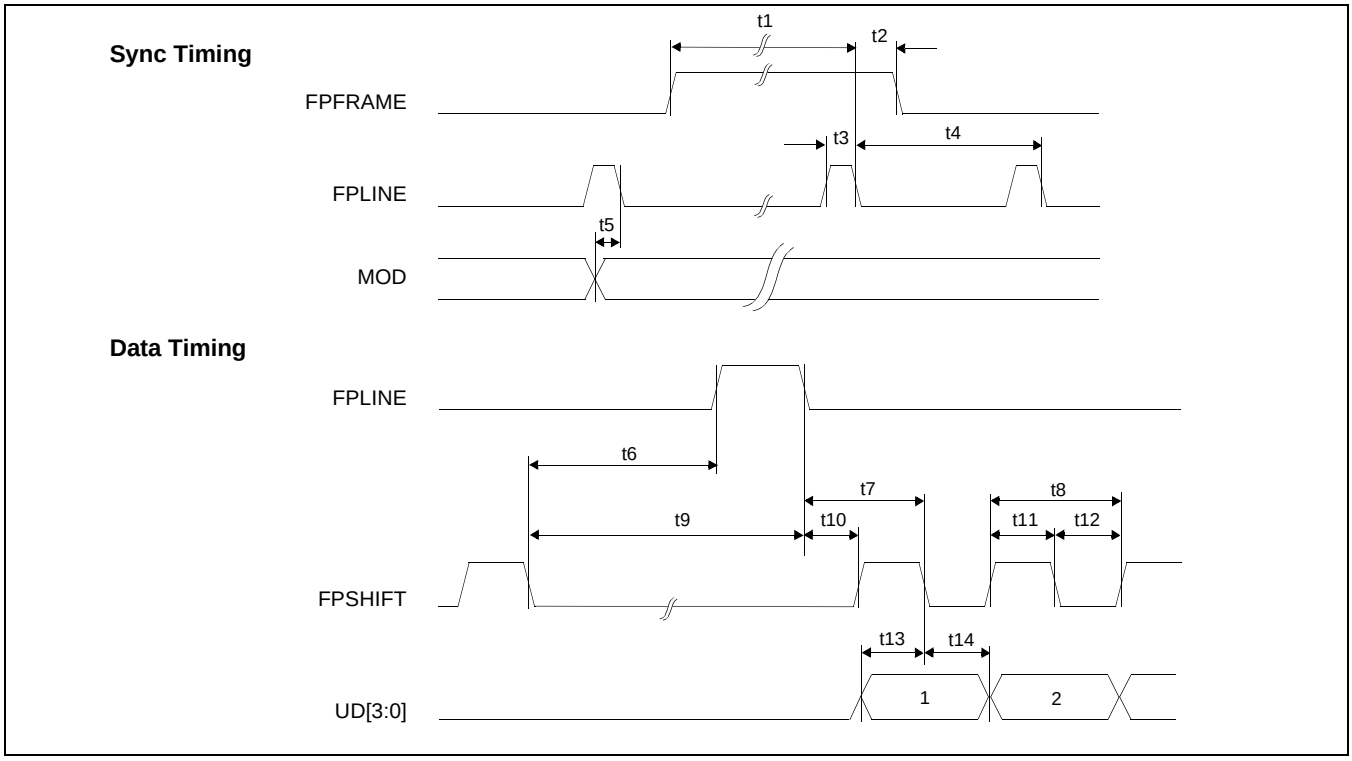

Figure 7-29: 4-Bit Single Color Passive LCD Panel A.C. Timing

Table 7-25: 4-Bit Single Color Passive LCD Panel A.C. Timing

Symbol	Parameter	Min	Typ	Max	Units
t1	FPFRAME setup to FPLINE pulse trailing edge	note 2			
t2	FPFRAME hold from FPLINE pulse trailing edge	14			Ts (note 1)
t3	FPLINE pulse width	9			Ts
t4	FPLINE period	note 3			
t5	MOD transition to FPLINE pulse trailing edge	1		note 4	Ts
t6	FPSHIFT falling edge to FPLINE pulse leading edge	note 5			
t7	FPLINE pulse trailing edge to FPSHIFT falling edge	t10 + t11			Ts
t8	FPSHIFT period	1			Ts
t9	FPSHIFT falling edge to FPLINE pulse trailing edge	note 6			
t10	FPLINE pulse trailing edge to FPSHIFT rising edge	21			Ts
t11	FPSHIFT pulse width high	0.45			Ts
t12	FPSHIFT pulse width low	0.45			Ts
t13	UD[3:0], setup to FPSHIFT falling edge	0.45			Ts
t14	UD[3:0], hold from FPSHIFT falling edge	0.45			Ts

1. Ts = pixel clock period = memory clock, [memory clock]/2, [memory clock]/3, [memory clock]/4 (see REG[19h] bits [1:0])
2. $t1_{min}$ = $t4_{min}$ - 14Ts
3. $t4_{min}$ = [((REG[04h] bits [6:0])+1)*8 + ((REG[05h] bits [4:0]) + 1)*8] + 33 Ts
4. $t5_{min}$ =[(((REG[04h] bits [6:0])+1)*8 + ((REG[05h] bits [4:0]) + 1)*8)-1] Ts
5. $t6_{min}$ = [((REG[05h] bits [4:0]) + 1)*8 - 28] Ts
6. $t9_{min}$ = [((REG[05h] bits [4:0]) + 1)*8 - 19] Ts

7.5.4 8-Bit Single Color Passive LCD Panel Timing (Format 1)

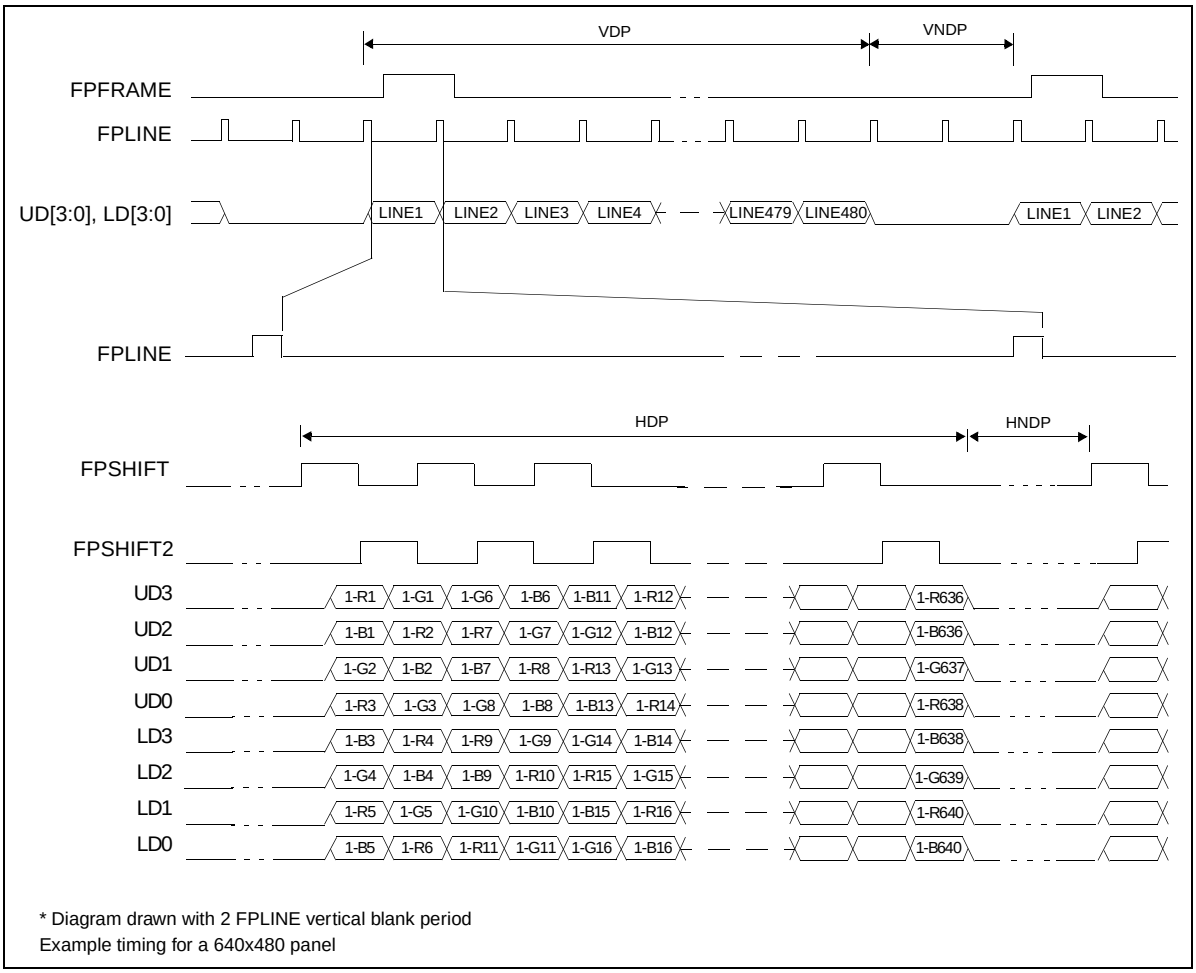

Figure 7-30: 8-Bit Single Color Passive LCD Panel Timing (Format 1)

VDP	= Vertical Display Period	= (REG[09h] bits [1:0], REG[08h] bits [7:0]) + 1
VNDP	= Vertical Non-Display Period	= (REG[0Ah] bits [5:0]) + 1
HDP	= Horizontal Display Period	= ((REG[04h] bits [6:0]) + 1)*8Ts
HNDP	= Horizontal Non-Display Period	= ((REG[05h] bits [4:0]) + 1)*8Ts

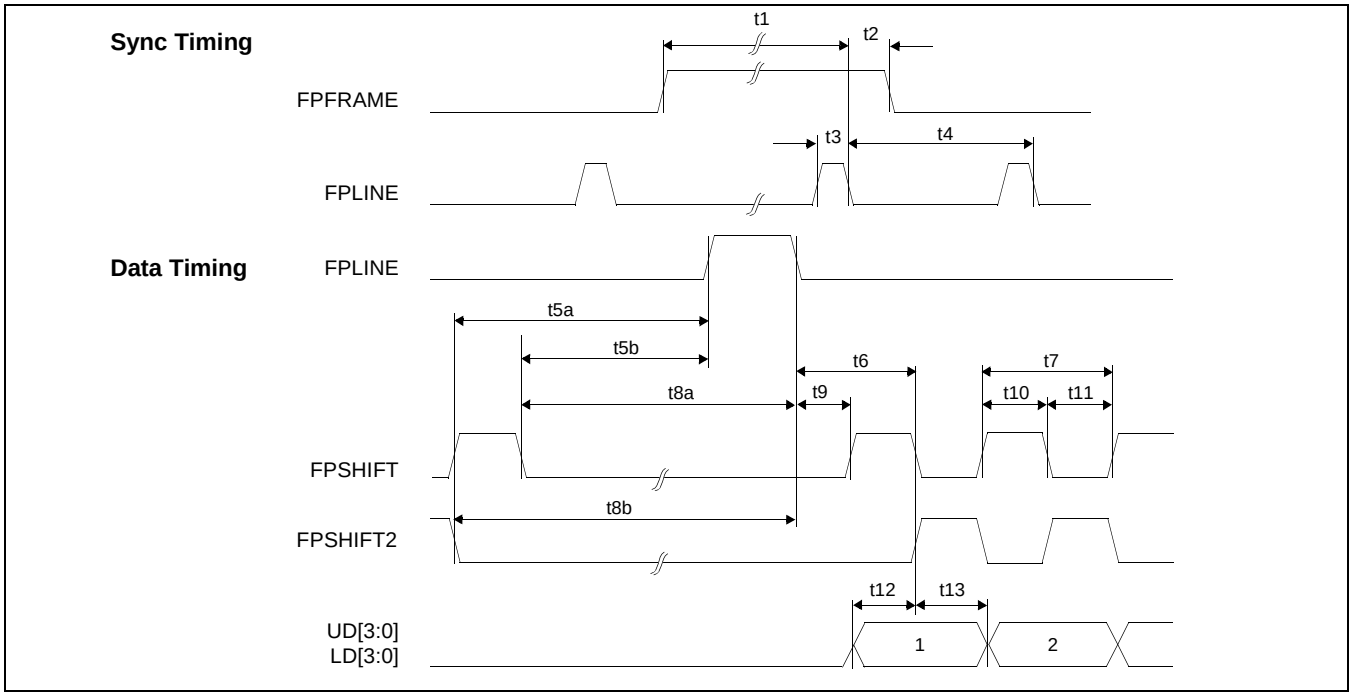

Figure 7-31: 8-Bit Single Color Passive LCD Panel A.C. Timing (Format 1)

Table 7-26: 8-Bit Single Color Passive LCD Panel A.C. Timing (Format 1)

Symbol	Parameter	Min	Typ	Max	Units
t1	FPFRAME setup to FPLINE pulse trailing edge	note 2			
t2	FPFRAME hold from FPLINE pulse trailing edge	14			Ts (note 1)
t3	FPLINE pulse width	9			Ts
t4	FPLINE period	note 3			
t5a	FPSHIFT2 falling edge to FPLINE pulse leading edge	note 4			
t5b	FPSHIFT falling edge to FPLINE pulse leading edge	note 5			
t6	FPLINE pulse trailing edge to FPSHIFT2 rising, FPSHIFT falling edge	t9 + t10			Ts
t7	FPSHIFT2, FPSHIFT period	4			Ts
t8a	FPSHIFT falling edge to FPLINE pulse trailing edge	note 6			
t8b	FPSHIFT2 falling edge to FPLINE pulse trailing edge	note 7			
t9	FPLINE pulse trailing edge to FPSHIFT rising edge	20			Ts
t10	FPSHIFT2, FPSHIFT pulse width high	2			Ts
t11	FPSHIFT2, FPSHIFT pulse width low	2			Ts
t12	UD[3:0], LD[3:0] setup to FPSHIFT2 rising, FPSHIFT falling edge	1			Ts
t13	UD[3:0], LD[3:0] hold from FPSHIFT2 rising, FPSHIFT falling edge	1			Ts

1. Ts = pixel clock period = memory clock, [memory clock]/2, [memory clock]/3, [memory clock]/4 (see REG[19h] bits [1:0])
2. $t1_{min}$ = $t4_{min}$ - 14Ts
3. $t4_{min}$ = [((REG[04h] bits [6:0])+1)*8 + ((REG[05h] bits [4:0]) + 1)*8] Ts
4. $t5_{min}$ = [((REG[05h] bits [4:0]) + 1)*8 - 27] Ts
5. $t5_{min}$ = [((REG[05h] bits [4:0]) + 1)*8 - 29] Ts
6. $t8_{min}$ = [((REG[05h] bits [4:0]) + 1)*8 - 20] Ts
7. $t8_{min}$ = [((REG[05h] bits [4:0]) + 1)*8 - 18] Ts

7.5.5 8-Bit Single Color Passive LCD Panel Timing (Format 2)

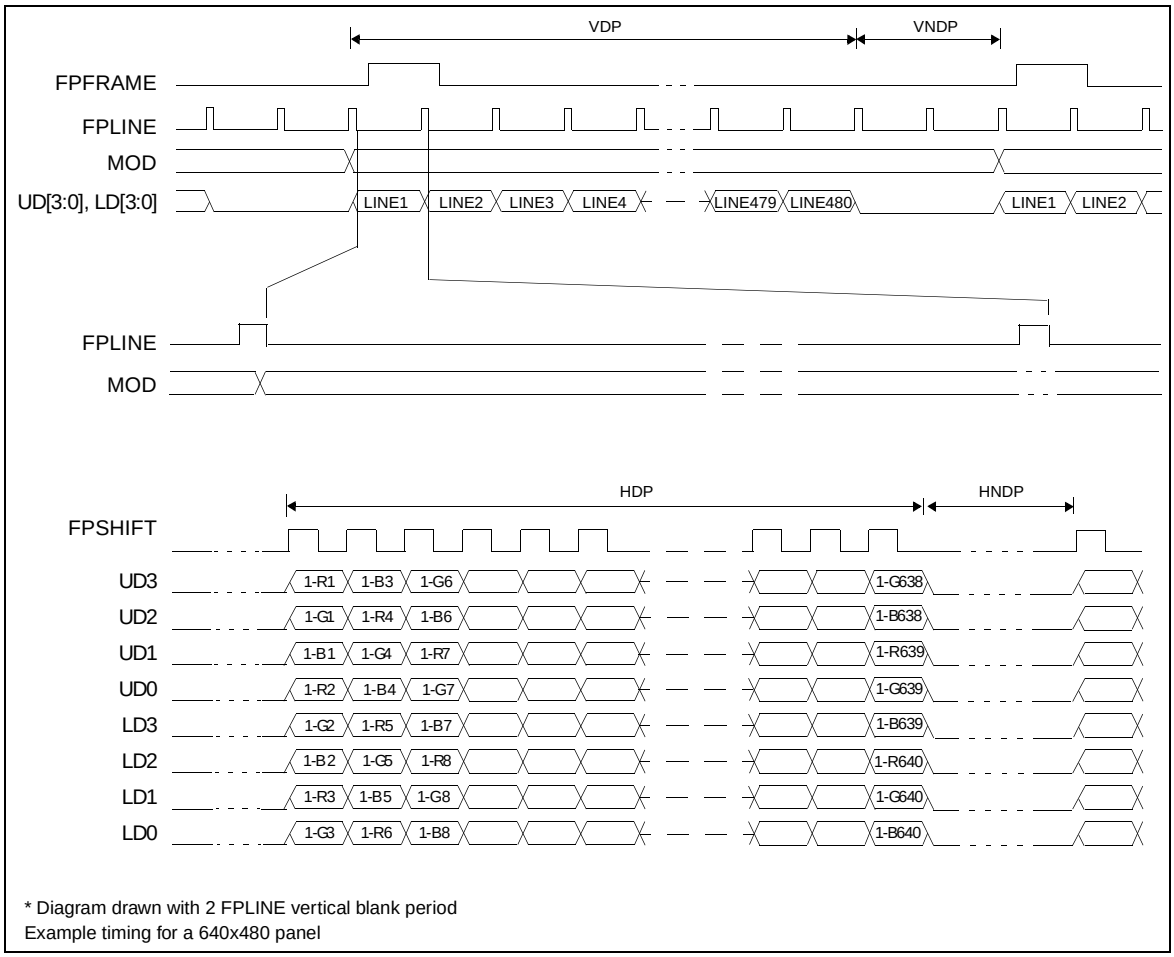

Figure 7-32: 8-Bit Single Color Passive LCD Panel Timing (Format 2)

VDP	= Vertical Display Period	= (REG[09h] bits [1:0], REG[08h] bits [7:0]) + 1
VNDP	= Vertical Non-Display Period	= (REG[0Ah] bits [5:0]) + 1
HDP	= Horizontal Display Period	= ((REG[04h] bits [6:0]) + 1)*8Ts
HNDP	= Horizontal Non-Display Period	= ((REG[05h] bits [4:0]) + 1)*8Ts

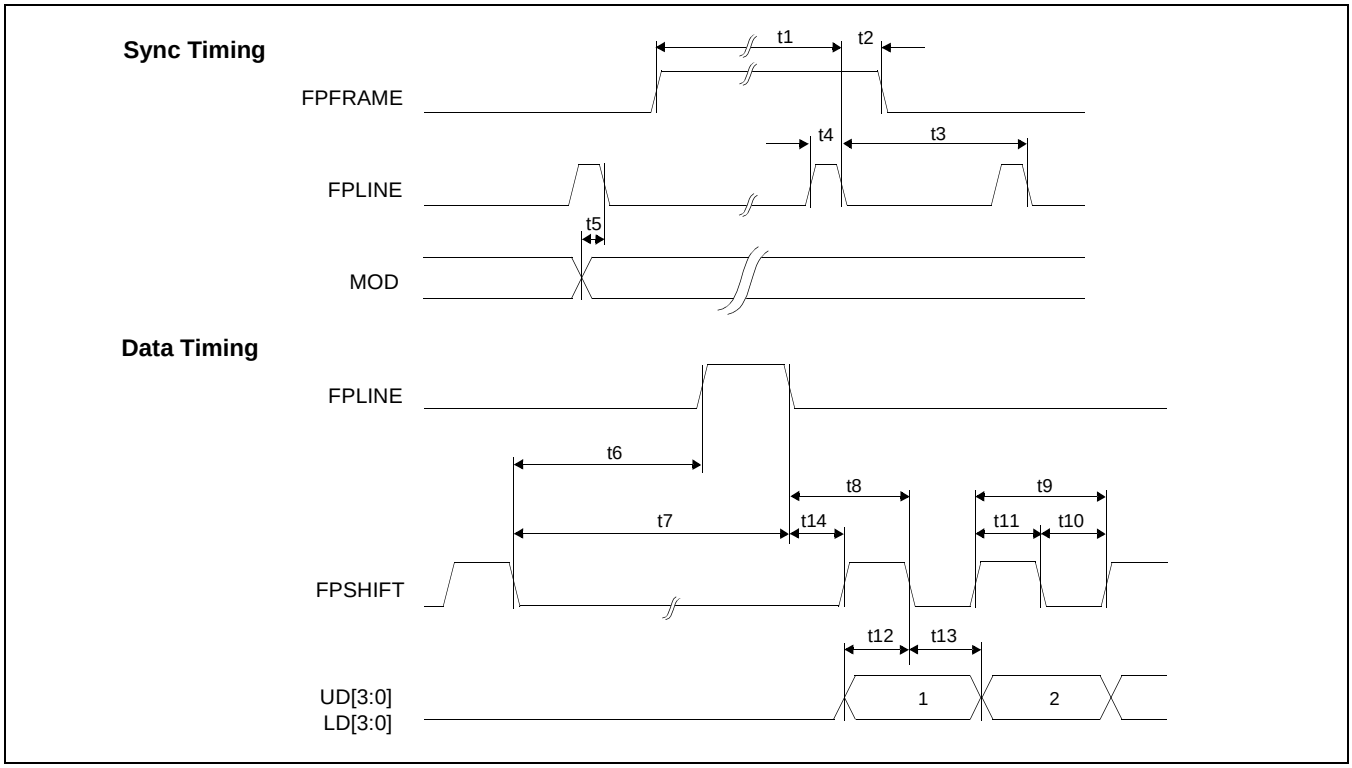

Figure 7-33: 8-Bit Single Color Passive LCD Panel A.C. Timing (Format 2)

Table 7-27: 8-Bit Single Color Passive LCD Panel A.C. Timing (Format 2)

Symbol	Parameter	Min	Typ	Max	Units
t1	FPFRAME setup to FPLINE pulse trailing edge	note 2			
t2	FPFRAME hold from FPLINE pulse trailing edge	14			Ts (note 1)
t3	FPLINE period	note 3			
t4	FPLINE pulse width	9			Ts
t5	MOD transition to FPLINE pulse trailing edge	1		note 4	Ts
t6	FPSHIFT falling edge to FPLINE pulse leading edge	note 5			
t7	FPSHIFT falling edge to FPLINE pulse trailing edge	note 6			
t8	FPLINE pulse trailing edge to FPSHIFT falling edge	t14 + 2			
t9	FPSHIFT period	2			Ts
t10	FPSHIFT pulse width low	1			Ts
t11	FPSHIFT pulse width high	1			Ts
t12	UD[3:0], LD[3:0] setup to FPSHIFT falling edge	1			Ts
t13	UD[3:0], LD[3:0] hold to FPSHIFT falling edge	1			Ts
t14	FPLINE pulse trailing edge to FPSHIFT rising edge	20			Ts

1. Ts = pixel clock period = memory clock, [memory clock]/2, [memory clock]/3, [memory clock]/4 (see REG[19h] bits [1:0])
2. $t1_{min}$ = $t3_{min}$ - 14Ts
3. $t3_{min}$ = [((REG[04h] bits [6:0])+1)*8 + ((REG[05h] bits [4:0]) + 1)*8] + 33 Ts
4. $t5_{min}$ = [(((REG[04h] bits [6:0])+1)*8 + ((REG[05h] bits [4:0]) + 1)*8)-1] Ts
5. $t6_{min}$ = [((REG[05h] bits [4:0]) + 1)*8 - 28] Ts
6. $t7_{min}$ = [((REG[05h] bits [4:0]) + 1)*8 - 19] Ts

7.5.6 16-Bit Single Color Passive LCD Panel Timing

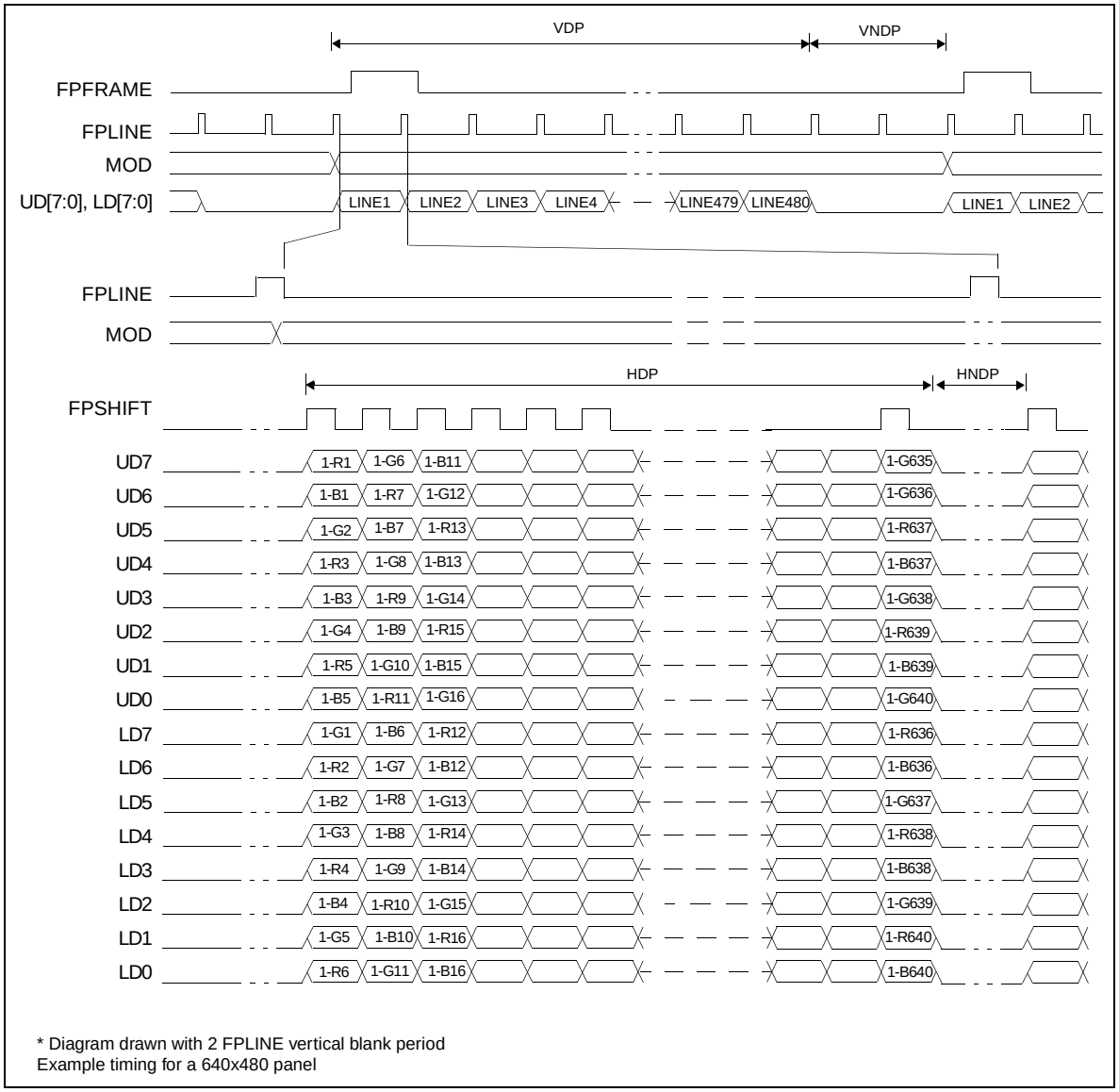

Figure 7-34: 16-Bit Single Color Passive LCD Panel Timing

VDP	= Vertical Display Period	= (REG[09h] bits [1:0], REG[08h] bits [7:0]) + 1
VNDP	= Vertical Non-Display Period	= (REG[0Ah] bits [5:0]) + 1
HDP	= Horizontal Display Period	= ((REG[04h] bits [6:0]) + 1)*8Ts
HNDP	= Horizontal Non-Display Period	= ((REG[05h] bits [4:0]) + 1)*8Ts

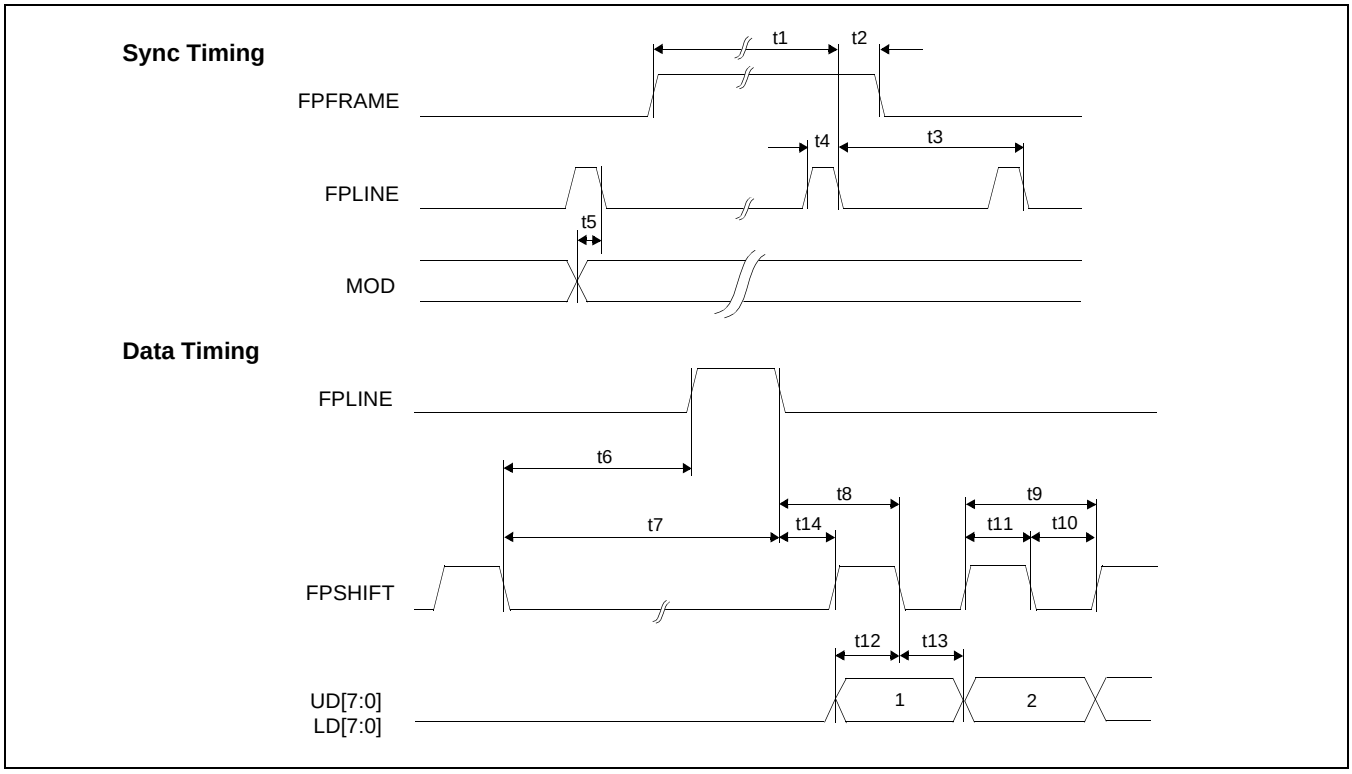

Figure 7-35: 16-Bit Single Color Passive LCD Panel A.C. Timing

Table 7-28: 16-Bit Single Color Passive LCD Panel A.C. Timing

Symbol	Parameter	Min	Typ	Max	Units
t1	FPFRAME setup to FPLINE pulse trailing edge	note 2			
t2	FPFRAME hold from FPLINE pulse trailing edge	14			Ts (note 1)
t3	FPLINE period	note 3			
t4	FPLINE pulse width	9			Ts
t5	MOD transition to FPLINE pulse trailing edge	1		note 4	Ts
t6	FPSHIFT falling edge to FPLINE pulse leading edge	note 5			
t7	FPSHIFT falling edge to FPLINE pulse trailing edge	note 6			
t8	FPLINE pulse trailing edge to FPSHIFT falling edge	t14 + 3			Ts
t9	FPSHIFT period	5			Ts
t10	FPSHIFT pulse width low	2			Ts
t11	FPSHIFT pulse width high	2			Ts
t12	UD[7:0], LD[7:0] setup to FPSHIFT falling edge	2			Ts
t13	UD[7:0], LD[7:0] hold to FPSHIFT falling edge	2			Ts
t14	FPLINE pulse trailing edge to FPSHIFT rising edge	20			Ts

1. Ts = pixel clock period = memory clock, [memory clock]/2, [memory clock]/3, [memory clock]/4 (see REG[19h] bits [1:0])
2. $t1_{min}$ = $t3_{min}$ - 14Ts
3. $t3_{min}$ = [((REG[04h] bits [6:0])+1)*8 + ((REG[05h] bits [4:0]) + 1)*8] + 33 Ts
4. $t5_{min}$ = [(((REG[04h] bits [6:0])+1)*8 + ((REG[05h] bits [4:0]) + 1)*8)-1] Ts
5. $t6_{min}$ = [(REG[05h] bits [4:0]) + 1)*8 - 27] Ts
6. $t7_{min}$ = [((REG[05h] bits [4:0]) + 1)*8 - 18] Ts

7.5.7 8-Bit Dual Monochrome Passive LCD Panel Timing

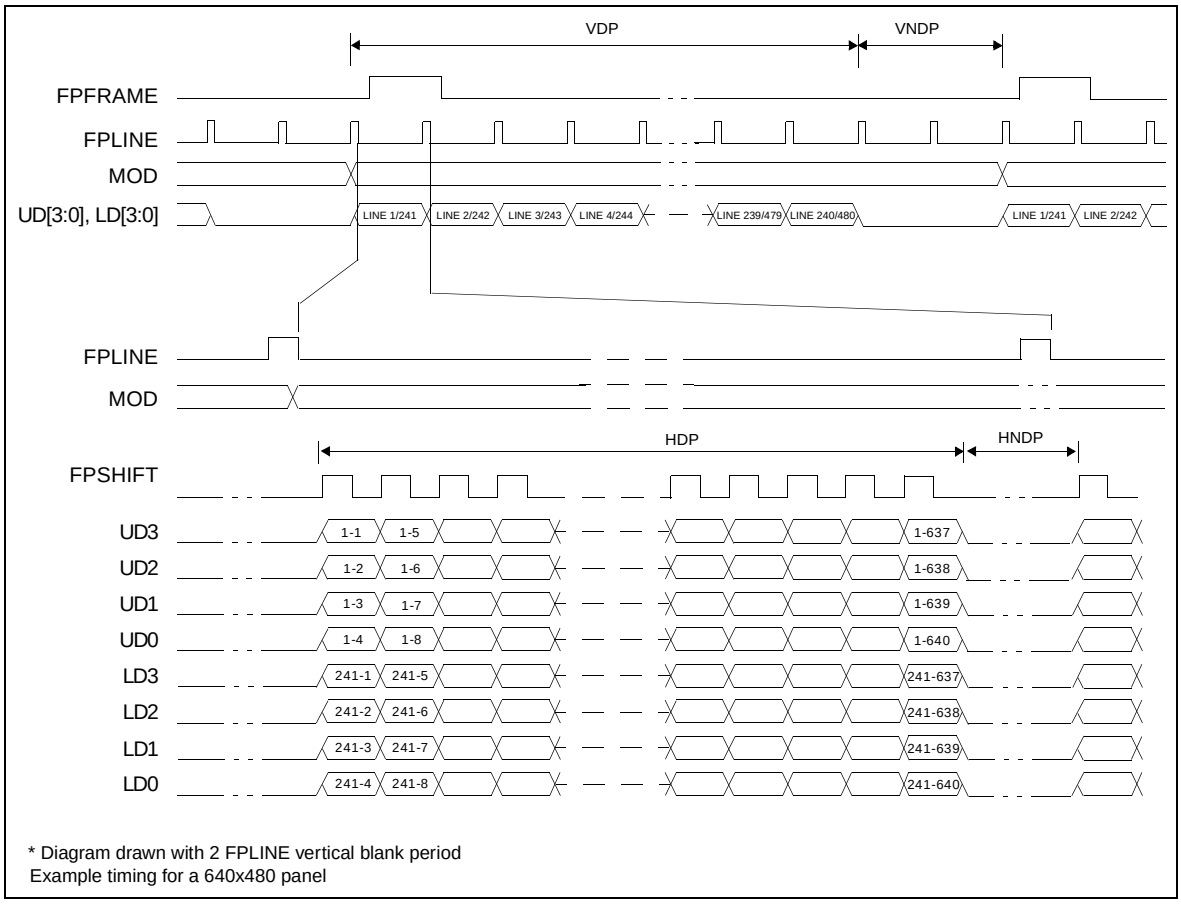

Figure 7-36: 8-Bit Dual Monochrome Passive LCD Panel Timing

VDP	= Vertical Display Period	= (REG[09h] bits [1:0], REG[08h] bits [7:0]) + 1
VNDP	= Vertical Non-Display Period	= (REG[0Ah] bits [5:0]) + 1
HDP	= Horizontal Display Period	= ((REG[04h] bits [6:0]) + 1)*8Ts
HNDP	= Horizontal Non-Display Period	= ((REG[05h] bits [4:0]) + 1)*8Ts

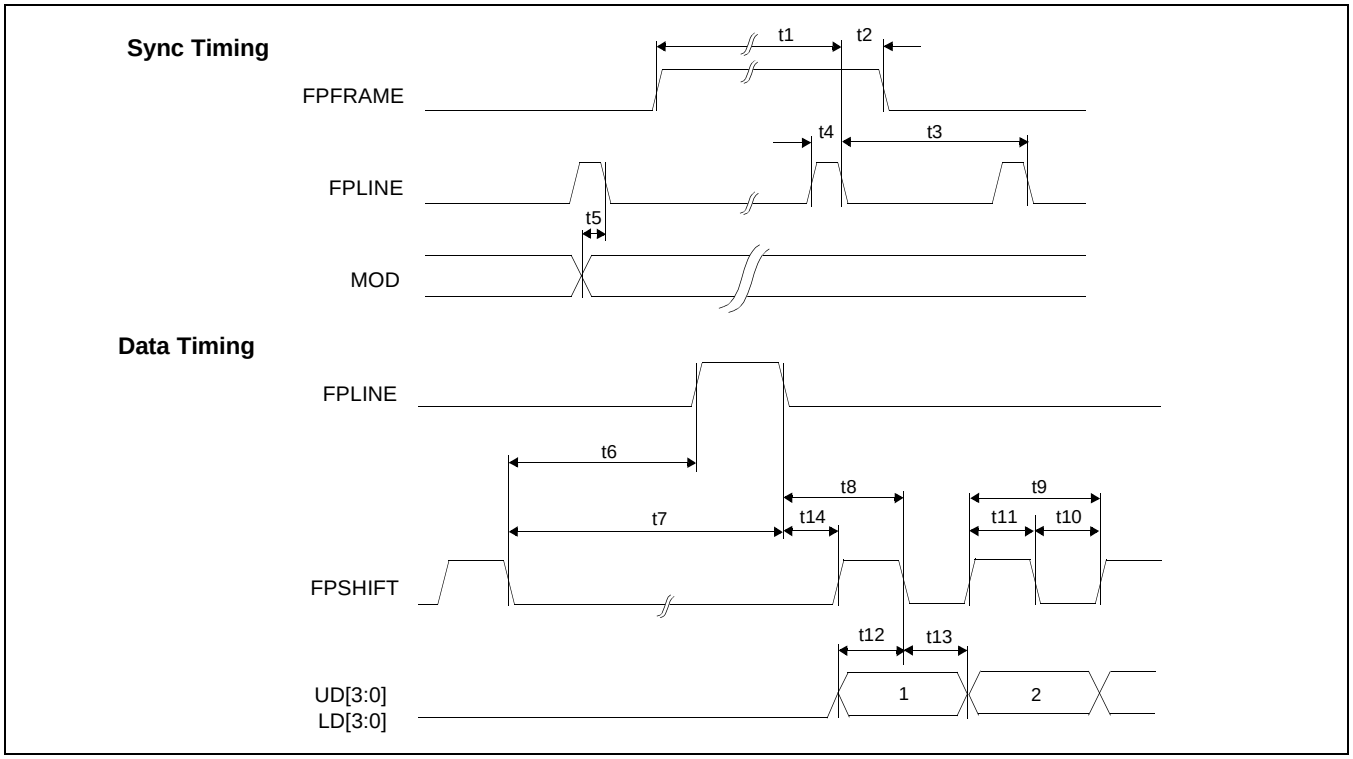

Figure 7-37: 8-Bit Dual Monochrome Passive LCD Panel A.C. Timing

Table 7-29: 8-Bit Dual Monochrome Passive LCD Panel A.C. Timing

Symbol	Parameter	Min	Typ	Max	Units
t1	FPFRAME setup to FPLINE pulse trailing edge	note 2			
t2	FPFRAME hold from FPLINE pulse trailing edge	14			Ts (note 1)
t3	FPLINE period	note 3			
t4	FPLINE pulse width	9			Ts
t5	MOD transition to FPLINE pulse trailing edge	1		note 4	Ts
t6	FPSHIFT falling edge to FPLINE pulse leading edge	note 5			
t7	FPSHIFT falling edge to FPLINE pulse trailing edge	note 6			
t8	FPLINE pulse trailing edge to FPSHIFT falling edge	t14 + 2			Ts
t9	FPSHIFT period	4			Ts
t10	FPSHIFT pulse width low	2			Ts
t11	FPSHIFT pulse width high	2			Ts
t12	UD[3:0], LD[3:0] setup to FPSHIFT falling edge	2			Ts
t13	UD[3:0], LD[3:0] hold to FPSHIFT falling edge	2			Ts
t14	FPLINE pulse trailing edge to FPSHIFT rising edge	12			Ts

1. Ts = pixel clock period = memory clock, [memory clock]/2, [memory clock]/3, [memory clock]/4 (see REG[19h] bits [1:0])
2. $t1_{min}$ = $t3_{min}$ - 14Ts
3. $t3_{min}$ = [((REG[04h] bits [6:0])+1)*8 + ((REG[05h] bits [4:0]) + 1)*8] + 33 Ts
4. $t5_{min}$ = [(((REG[04h] bits [6:0])+1)*8 + ((REG[05h] bits [4:0]) + 1)*8)-1] Ts
5. $t6_{min}$ = [((REG[05h] bits [4:0]) + 1)*8 - 19] Ts
6. $t7_{min}$ = [((REG[05h] bits [4:0]) + 1)*8 - 10] Ts

7.5.8 8-Bit Dual Color Passive LCD Panel Timing

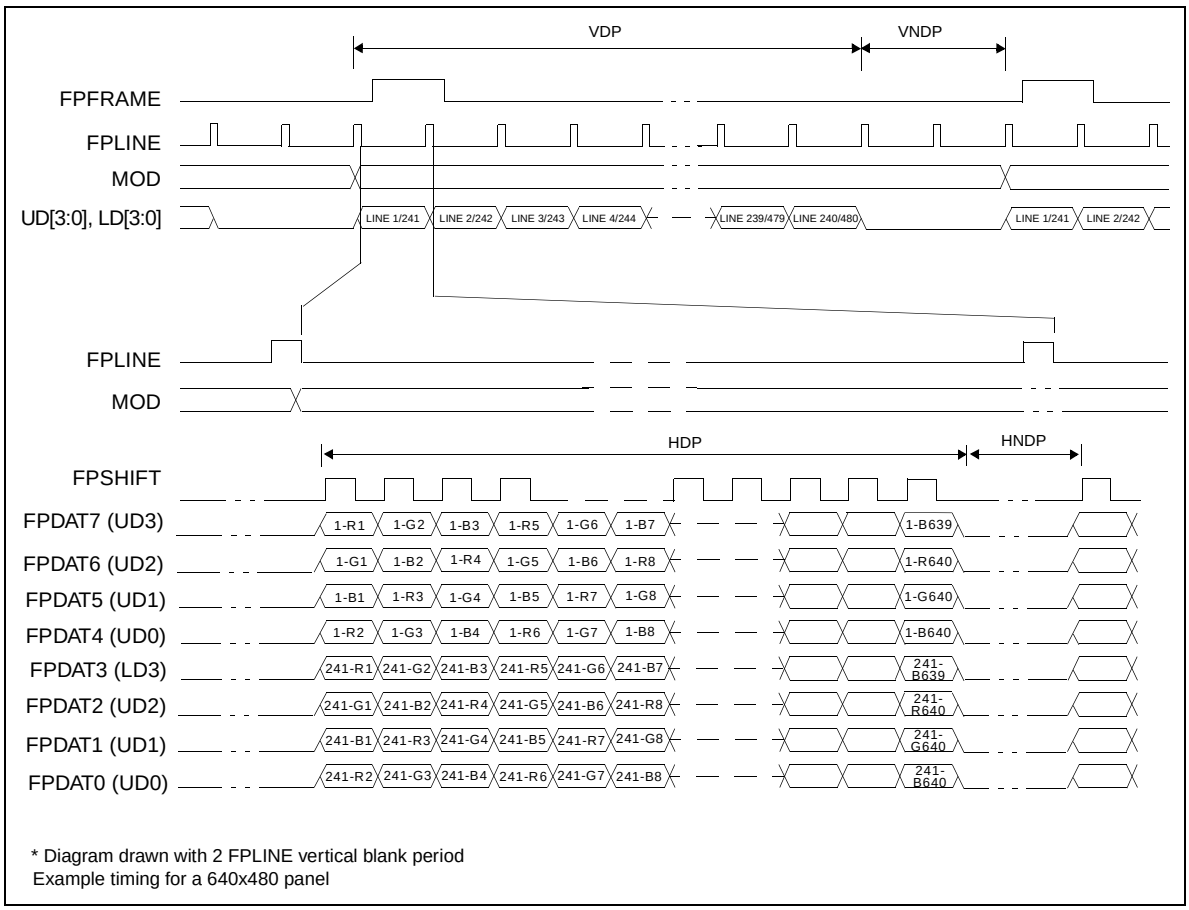

Figure 7-38: 8-Bit Dual Color Passive LCD Panel Timing

VDP	= Vertical Display Period	= (REG[09h] bits [1:0], REG[08h] bits [7:0]) + 1
VNDP	= Vertical Non-Display Period	= (REG[0Ah] bits [5:0]) + 1
HDP	= Horizontal Display Period	= ((REG[04h] bits [6:0]) + 1)*8Ts
HNDP	= Horizontal Non-Display Period	= ((REG[05h] bits [4:0]) + 1)*8Ts

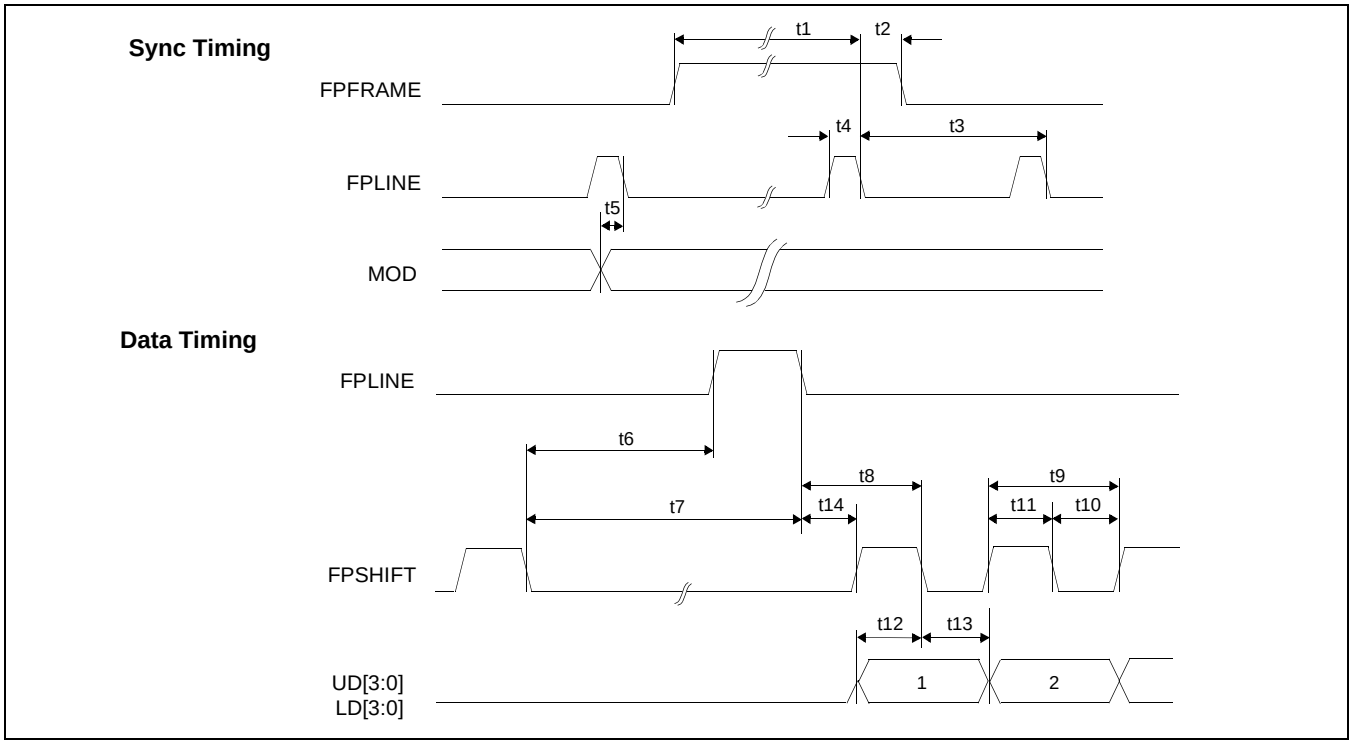

Figure 7-39: 8-Bit Dual Color Passive LCD Panel A.C. Timing

Table 7-30: 8-Bit Dual Color Passive LCD Panel A.C. Timing

Symbol	Parameter	Min	Typ	Max	Units
t1	FPFRAME setup to FPLINE pulse trailing edge	note 2			
t2	FPFRAME hold from FPLINE pulse trailing edge	14			Ts (note 1)
t3	FPLINE period	note 3			
t4	FPLINE pulse width	9			Ts
t5	MOD transition to FPLINE pulse trailing edge	1		note 4	Ts
t6	FPSHIFT falling edge to FPLINE pulse leading edge	note 5			
t7	FPSHIFT falling edge to FPLINE pulse trailing edge	note 6			
t8	FPLINE pulse trailing edge to FPSHIFT falling edge	t14 + t11			Ts
t9	FPSHIFT period	1			Ts
t10	FPSHIFT pulse width low	0.45			Ts
t11	FPSHIFT pulse width high	0.45			Ts
t12	UD[3:0], LD[3:0] setup to FPSHIFT falling edge	0.45			Ts
t13	UD[3:0], LD[3:0] hold to FPSHIFT falling edge	0.45			Ts
t14	FPLINE pulse trailing edge to FPSHIFT rising edge	13			Ts

1. Ts = pixel clock period = memory clock, [memory clock]/2, [memory clock]/3, [memory clock]/4 (see REG[19h] bits [1:0])
2. $t1_{min}$ = $t3_{min}$ - 14Ts
3. $t3_{min}$ = [((REG[04h] bits [6:0])+1)*8 + ((REG[05h] bits [4:0]) + 1)*8] + 33 Ts
4. $t5_{min}$ = [(((REG[04h] bits [6:0])+1)*8 + ((REG[05h] bits [4:0]) + 1)*8)-1] Ts
5. $t6_{min}$ = [((REG[05h] bits [4:0]) + 1)*8 - 20] Ts
6. $t7_{min}$ = [((REG[05h] bits [4:0]) + 1)*8 - 11] Ts

7.5.9 16-Bit Dual Color Passive LCD Panel Timing

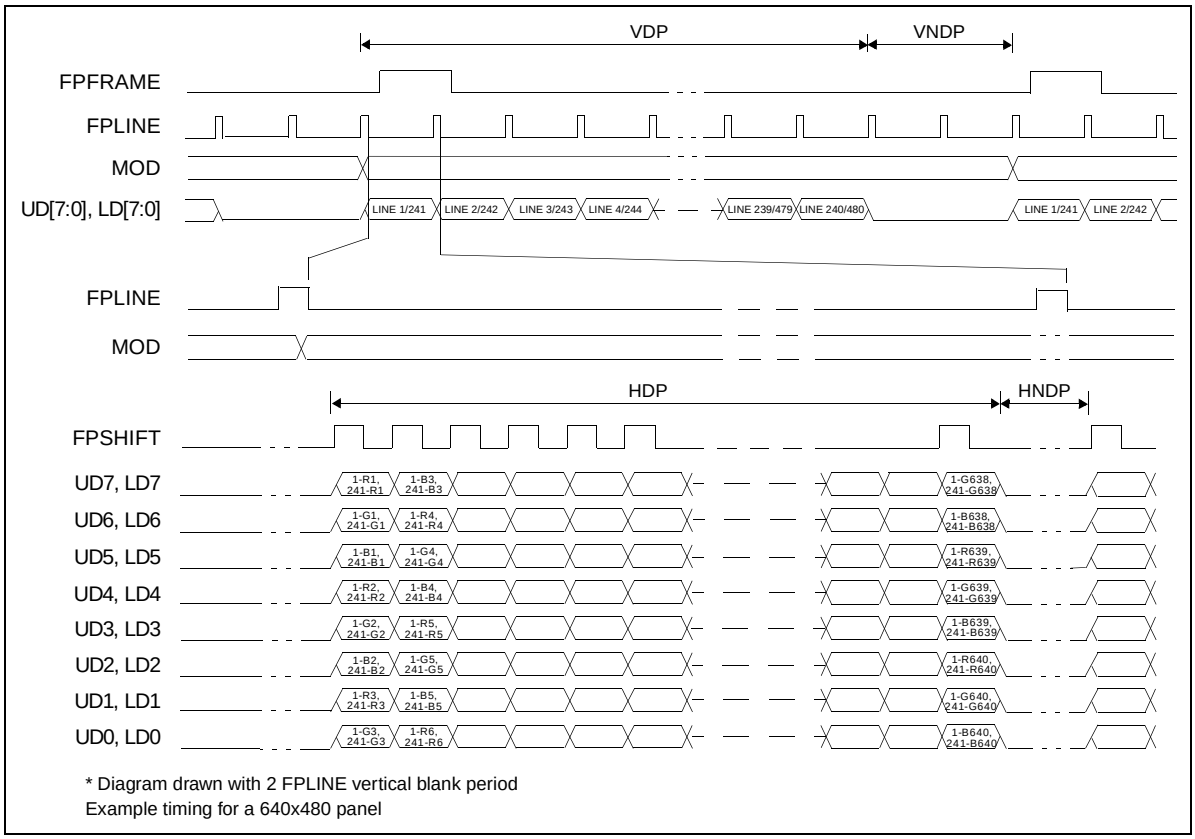

Figure 7-40: 16-Bit Dual Color Passive LCD Panel Timing

VDP	= Vertical Display Period	= (REG[09h] bits [1:0], REG[08h] bits [7:0]) + 1
VNDP	= Vertical Non-Display Period	= (REG[0Ah] bits [5:0]) + 1
HDP	= Horizontal Display Period	= ((REG[04h] bits [6:0]) + 1)*8Ts
HNDP	= Horizontal Non-Display Period	= ((REG[05h] bits [4:0]) + 1)*8Ts

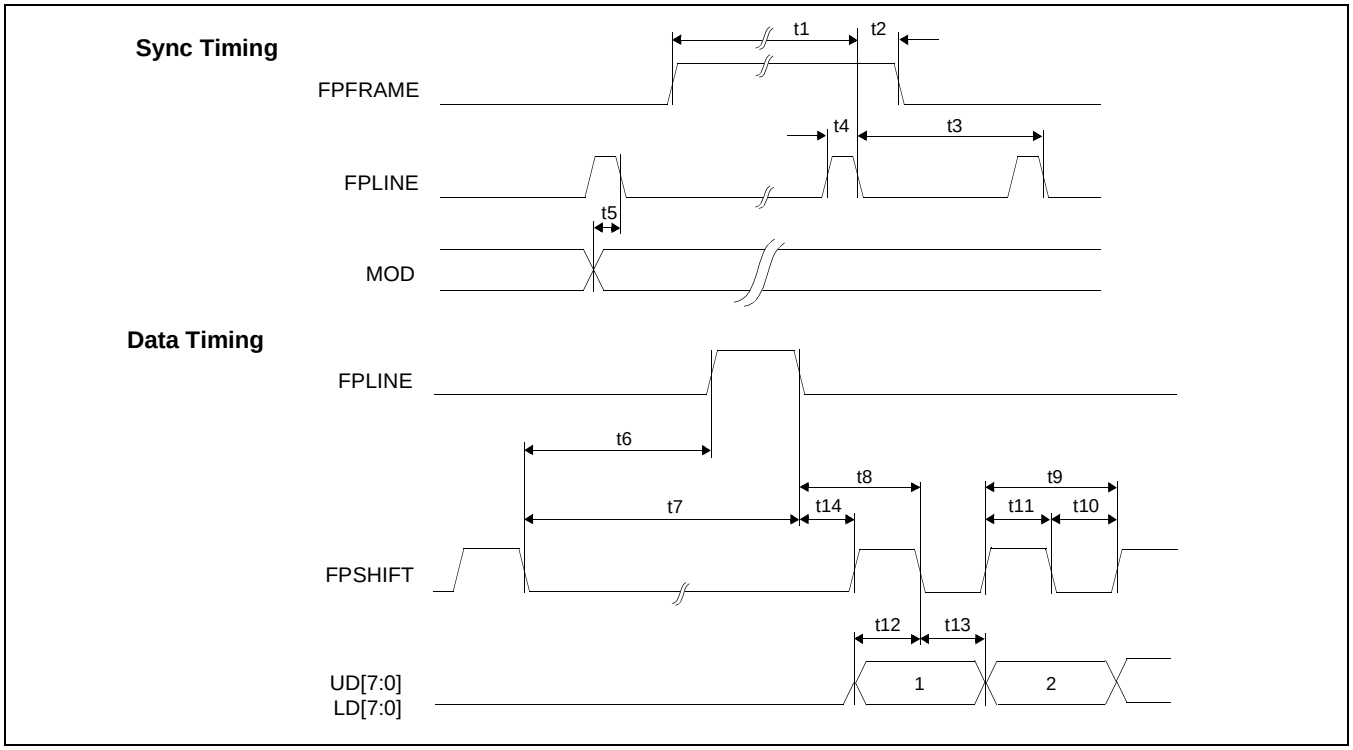

Figure 7-41: 16-Bit Dual Color Passive LCD Panel A.C. Timing

Table 7-31: 16-Bit Dual Color Passive LCD Panel A.C. Timing

Symbol	Parameter	Min	Typ	Max	Units
t1	FPFRAME setup to FPLINE pulse trailing edge	note 2			
t2	FPFRAME hold from FPLINE pulse trailing edge	14			Ts (note 1)
t3	FPLINE period	note 3			
t4	FPLINE pulse width	9			Ts
t5	MOD transition to FPLINE pulse trailing edge	1		note 4	Ts
t6	FPSHIFT falling edge to FPLINE pulse leading edge	note 5			
t7	FPSHIFT falling edge to FPLINE pulse trailing edge	note 6			
t8	FPLINE pulse trailing edge to FPSHIFT falling edge	t14 + 2			
t9	FPSHIFT period	2			Ts
t10	FPSHIFT pulse width low	1			Ts
t11	FPSHIFT pulse width high	1			Ts
t12	UD[7:0], LD[7:0] setup to FPSHIFT falling edge	1			Ts
t13	UD[7:0], LD[7:0] hold to FPSHIFT falling edge	1			Ts
t14	FPLINE pulse trailing edge to FPSHIFT rising edge	12			Ts

1. Ts = pixel clock period = memory clock, [memory clock]/2, [memory clock]/3, [memory clock]/4 (see REG[19h] bits [1:0])
2. $t1_{min}$ = $t3_{min}$ - 14Ts
3. $t3_{min}$ = [((REG[04h] bits [6:0])+1)*8 + ((REG[05h] bits [4:0]) + 1)*8] + 33 Ts
4. $t5_{min}$ = [(((REG[04h] bits [6:0])+1)*8 + ((REG[05h] bits [4:0]) + 1)*8)-1] Ts
5. $t6_{min}$ = [((REG[05h] bits [4:0]) + 1)*8 - 20] Ts
6. $t7_{min}$ = [((REG[05h] bits [4:0]) + 1)*8 - 11] Ts

7.5.10 16-Bit TFT/D-TFD Panel Timing

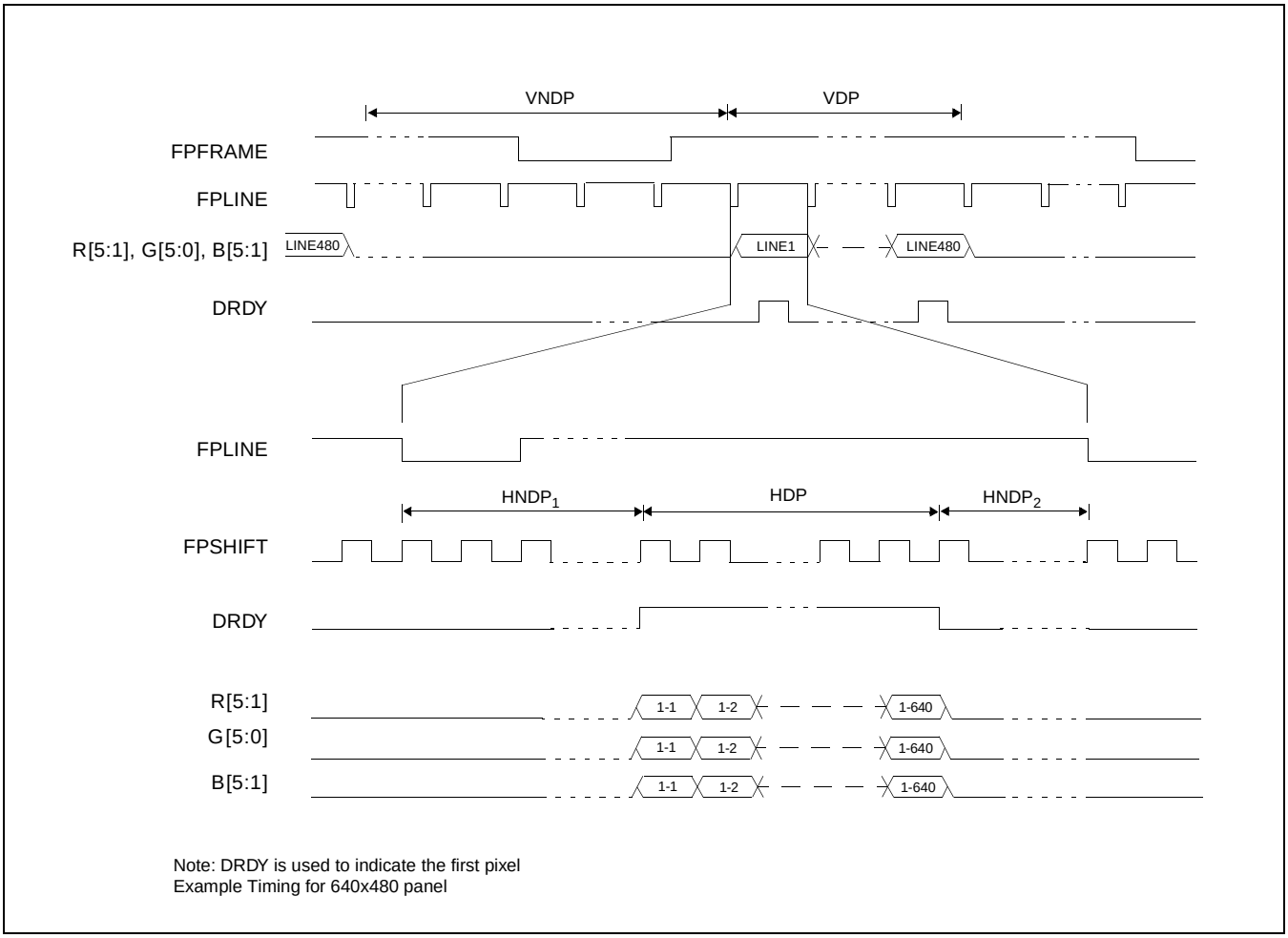

Figure 7-42: 16-Bit TFT/D-TFD Panel Timing

VDP	= Vertical Display Period	= (REG[09h] bits [1:0], REG[08h] bits [7:0]) + 1
VNDP	= Vertical Non-Display Period	= (REG[0Ah] bits [5:0]) + 1
HDP	= Horizontal Display Period	= ((REG[04h] bits [6:0]) + 1)*8Ts
HNDP	= Horizontal Non-Display Period	= $HNDP_1 + HNDP_2$ = ((REG[05h] bits [4:0]) + 1)*8Ts

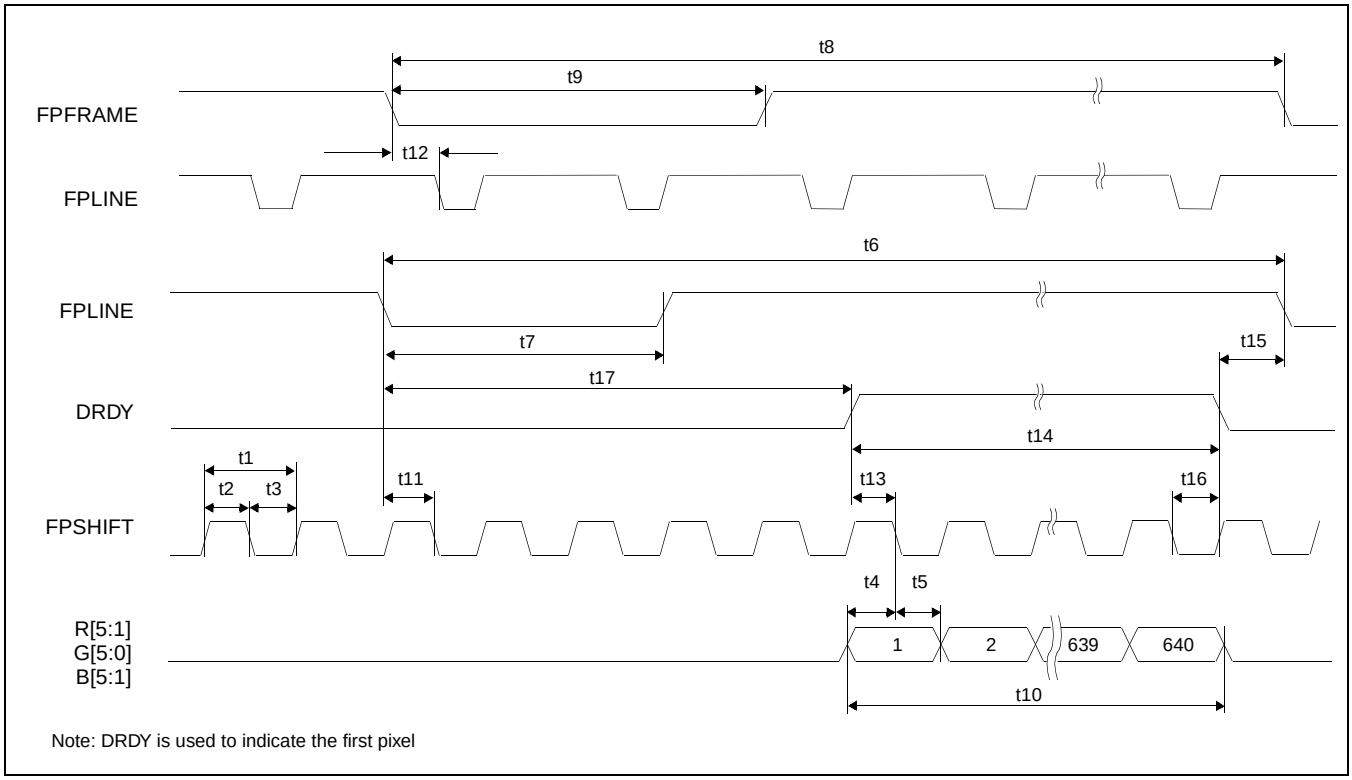

Figure 7-43: TFT/D-TFD A.C. Timing

Table 7-32: TFT/D-TFD A.C. Timing

Symbol	Parameter	Min	Typ	Max	Units
t1	FPSHIFT period	1			Ts (note 1)
t2	FPSHIFT pulse width high	0.45			Ts
t3	FPSHIFT pulse width low	0.45			Ts
t4	data setup to FPSHIFT falling edge	0.45			Ts
t5	data hold from FPSHIFT falling edge	0.45			Ts
t6	FPLINE cycle time	note 2			
t7	FPLINE pulse width low	note 3			
t8	FPFRAME cycle time	note 4			
t9	FPFRAME pulse width low	note 5			
t10	horizontal display period	note 6			
t11	FPLINE setup to FPSHIFT falling edge	0.45			Ts
t12	FPFRAME pulse leading edge to FPLINE pulse leading edge phase difference	note 7			
t13	DRDY to FPSHIFT falling edge setup time	0.45			Ts
t14	DRDY pulse width	note 8			
t15	DRDY falling edge to FPLINE pulse leading edge	note 9			
t16	DRDY hold from FPSHIFT falling edge	0.45			Ts
t17	FPLINE pulse leading edge to DRDY active	note 10		250	Ts

1. Ts = pixel clock period = memory clock, [memory clock]/2, [memory clock]/3, [memory clock]/4 (see REG[19h] bits [1:0])
2. $t6_{min}$ = [((REG[04h] bits [6:0])+1)*8 + ((REG[05h] bits [4:0])+1)*8] Ts
3. $t7_{min}$ = [((REG[07h] bits [3:0])+1)*8] Ts
4. $t8_{min}$ = [((REG[09h] bits [1:0], REG[08h] bits [7:0])+1) + ((REG[0Ah] bits [5:0])+1)] lines
5. $t9_{min}$ = [((REG[0Ch] bits [2:0])+1)] lines
6. $t10_{min}$ = [((REG[04h] bits [6:0])+1)*8] Ts
7. $t12_{min}$ = [((REG[06h] bits [4:0])*8)+1] Ts
8. $t14_{min}$ = [((REG[04h] bits [6:0])+1)*8] Ts
9. $t15_{min}$ = [((REG[06h] bits [4:0])+1)*8 - 2] Ts
10. $t17_{min}$ = [((REG[05h] bits [4:0])+1)*8 - ((REG[06h] bits [4:0])+1)*8 + 2]

7.5.11 CRT Timing

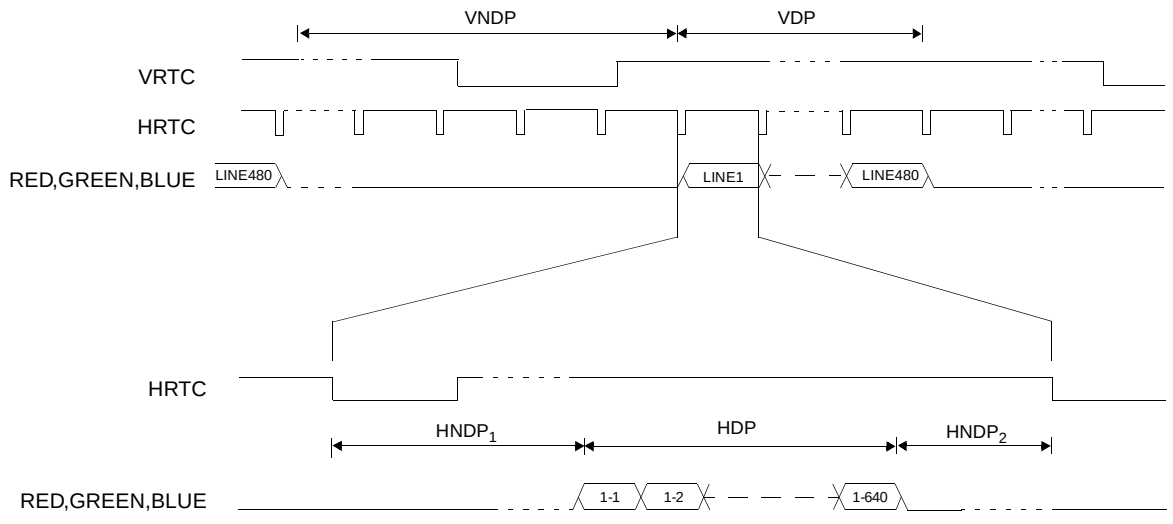

Example Timing for 640x480 CRT

Figure 7-44: CRT Timing

VDP	= Vertical Display Period	= (REG[09h] bits [1:0], REG[08h] bits [7:0]) + 1
VNDP	= Vertical Non-Display Period	= (REG[0Ah] bits [5:0]) + 1
HDP	= Horizontal Display Period	= ((REG[04h] bits [6:0]) + 1)*8Ts
HNDP	= Horizontal Non-Display Period	= $HNDP_1 + HNDP_2$ = ((REG[05h] bits [4:0]) + 1)*8Ts

Note

The signals RED, GREEN and BLUE are analog signals from the embedded DAC and represent the color components which make up each pixel.

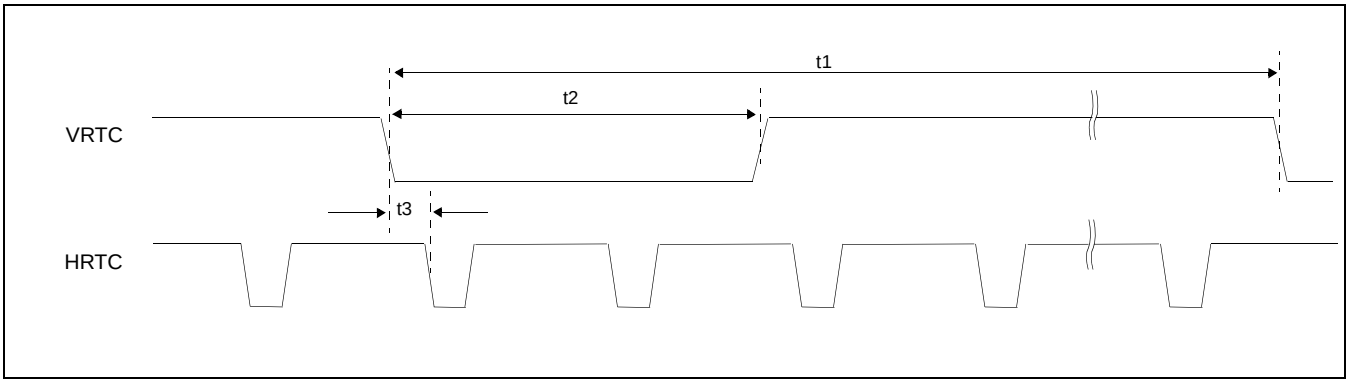

Figure 7-45: CRT A.C. Timing

Symbol	Parameter	Min	Typ	Max	Units
t1	VRTC cycle time		note 1		
t2	VRTC pulse width low		note 2		
t3	VRTC falling edge to FPLINE falling edge phase difference		note 3		

1. $t8_{min}$ = [((REG[09h] bits 1:0, REG[08h] bits 7:0)+1) + ((REG[0Ah] bits 6:0)+1)] lines
2. $t9_{min}$ = [((REG[0Ch] bits 2:0)+1)] lines
3. $t12_{min}$ = [((REG[06h] bits 4:0)+1)*8] Ts

8 Registers

8.1 Register Mapping

The S1D13505 registers are memory mapped. The system addresses the registers through the CS#, M/R#, and AB[5:0] input pins. When CS# = 0 and M/R# = 0, the registers are mapped by address bits AB[5:0], e.g. REG[00h] is mapped to AB[5:0] = 000000, REG[01h] is mapped to AB[5:0] = 000001. See the table below:

Table 8-1: S1D13505 Addressing

CS#	M/R#	Access
0	0	Register access: • REG[00h] is addressed when AB[5:0] = 0 • REG[01h] is addressed when AB[5:0] = 1 • REG[n] is addressed when AB[5:0] = n
0	1	Memory access: the 2M byte Display Buffer is addressed by AB[20:0]
1	X	S1D13505 not selected

8.2 Register Descriptions

Unless specified otherwise, all register bits are reset to 0 during power-on. Reserved bits should be written 0 when programming unless otherwise noted.

8.2.1 Revision Code Register

Revision Code Register REG[00h]							RO
Product Code Bit 5	Product Code Bit 4	Product Code Bit 3	Product Code Bit 2	Product Code Bit 1	Product Code Bit 0	Revision Code Bit 1	Revision Code Bit 0

bits 7-2 Product Code Bits [5:0]
This is a read-only register that indicates the product code of the chip. The product code for the S1D13505 is 000011.

bits 1-0 Revision Code Bits [1:0]
This is a read-only register that indicates the revision code of the chip. The revision code for the S1D13505F00A is 00.

8.2.2 Memory Configuration Registers

Memory Configuration Register REG[01h]							RW
n/a	Refresh Rate Bit 2	Refresh Rate Bit 1	Refresh Rate Bit 0	n/a	WE# Control	n/a	Memory Type

bits 6-4 DRAM Refresh Rate Select Bits [2:0]
These bits specify the divisor used to generate the DRAM refresh rate from the input clock (CLKI).

Table 8-2: DRAM Refresh Rate Selection

DRAM Refresh Rate Select Bits [2:0]	CLKI Frequency Divisor	Example Refresh Rate for CLKI = 33MHz	Example period for 256 refresh cycles at CLKI = 33MHz
000	64	520 kHz	0.5 ms
001	128	260 kHz	1 ms
010	256	130 kHz	2 ms
011	512	65 kHz	4 ms
100	1024	33 kHz	8 ms
101	2048	16 kHz	16 ms
110	4096	8 kHz	32 ms
111	8192	4 kHz	64 ms

bit 2 WE# Control
When this bit = 1, 2-WE# DRAM is selected.
When this bit = 0, 2-CAS# DRAM is selected.

bit 0 Memory Type
When this bit = 1, FPM-DRAM is selected.
When this bit = 0, EDO-DRAM is selected.
This bit should be changed only when there are no read/write DRAM cycles. This condition occurs when all of the following are true: the Display FIFO is disabled (REG[23h] bit 7 = 1), and the Half Frame Buffer is disabled (REG[1Bh] bit 0 = 1), and the Ink/Cursor is inactive (Reg[27h] bits 7-6 = 00). This condition also occurs when the CRT and LCD enable bits (Reg[0Dh] bits 1-0) have remained 0 since chip reset. For further programming information, see *S1D13505 Programming Notes and Examples*, document number X23A-G-003-xx.

8.2.3 Panel/Monitor Configuration Registers

Panel Type Register REG[02h]							RW
EL Panel Enable	n/a	Panel Data Width Bit 1	Panel Data Width Bit 0	Panel Data Format Select	Color/Mono. Panel Select	Dual/Single Panel Select	TFT/ Passive LCD Panel Select

bit 7 EL Panel Mode Enable
When this bit = 1, EL Panel support mode is enabled. Every 262143 frames (approximately 1 hour at 60Hz frame rate) the identical panel data is sent to two consecutive frames, i.e. the frame rate modulation circuitry is frozen for one frame.

bits 5-4 Panel Data Width Bits [1:0]
These bits select the LCD interface data width as shown in the following table.

Table 8-3: Panel Data Width Selection

Panel Data Width Bits [1:0]	Passive LCD Panel Data Width Size	TFT/D-TFD Panel Data Width Size
00	4-bit	9-bit
01	8-bit	12-bit
10	16-bit	16-bit
11	Reserved	Reserved

bit 3 Panel Data Format Select
When this bit = 1, color passive LCD panel data format 2 is selected.
When this bit = 0, passive LCD panel data format 1 is selected.

bit 2 Color/Mono Panel Select
When this bit = 1, color passive LCD panel is selected.
When this bit = 0, monochrome passive LCD panel is selected.

bit 1 Dual/Single Panel Select
When this bit = 1, dual passive LCD panel is selected.
When this bit = 0, single passive LCD panel is selected.

bit 0 TFT/Passive LCD Panel Select
When this bit = 1, TFT/D-TFD panel is selected.
When this bit = 0, passive LCD panel is selected.

MOD Rate Register REG[03h]							RW
n/a	n/a	MOD Rate Bit 5	MOD Rate Bit 4	MOD Rate Bit 3	MOD Rate Bit 2	MOD Rate Bit 1	MOD Rate Bit 0

bits 5-0 MOD Rate Bits [5:0]
When the DRDY pin is configured as MOD, this register controls the toggle rate of the MOD output. When this register is zero, the MOD output signal toggles every FPFRAME. When this register is non-zero, its value represents the number of FPLINE pulses between toggles of the MOD output signal.

Horizontal Display Width Register REG[04h]							RW
n/a	Horizontal Display Width Bit 6	Horizontal Display Width Bit 5	Horizontal Display Width Bit 4	Horizontal Display Width Bit 3	Horizontal Display Width Bit 2	Horizontal Display Width Bit 1	Horizontal Display Width Bit 0

bits 6-0 Horizontal Display Width Bits [6:0]
These bits specify the LCD panel and/or the CRT horizontal display width as follows.

Contents of this Register = (Horizontal Display Width ÷ 8) - 1

For passive LCD panels the Horizontal Display Width must be divisible by 16, and for TFT LCD panels/CRTs the Horizontal Display Width must be divisible by 8. The maximum horizontal display width is 1024 pixels.

Note
This register must be programmed such that REG[04h] ≥ 3 (32 pixels)

Note
When setting a horizontal resolution greater than 767 pixels, with a color depth of 15/16 bpp, the Memory Offset Registers (REG[16h], REG[17h]) must be set to a virtual horizontal pixel resolution of 1024.

Horizontal Non-Display Period Register REG[05h]							RW
n/a	n/a	n/a	Horizontal Non-Display Period Bit 4	Horizontal Non-Display Period Bit 3	Horizontal Non-Display Period Bit 2	Horizontal Non-Display Period Bit 1	Horizontal Non-Display Period Bit 0

bits 4-0 Horizontal Non-Display Period Bits [4:0]
These bits specify the horizontal non-display period.

Horizontal non-display period (pixels) = (Horizontal Non-Display Period Bits [4:0] + 1) × 8

The recommended minimum value which should be programmed into this register is 3 (32 pixels). The maximum value which can be programmed into this register is 1Fh, which gives a horizontal non-display period of 256 pixels.

Note
This register must be programmed such that
REG[05h] ≥ 3 and (REG[05h] + 1) ≥ (REG[06h] + 1) + (REG[07h] bits [3:0] +1)

HRTC/FPLINE Start Position Register REG[06h]							RW
n/a	n/a	n/a	HRTC/ FPLINE Start Position Bit 4	HRTC/ FPLINE Start Position Bit 3	HRTC/ FPLINE Start Position Bit 2	HRTC/ FPLINE Start Position Bit 1	HRTC/ FPLINE Start Position Bit 0

bits 4-0 HRTC/FPLINE Start Position Bits [4:0]
For CRT and TFT/D-TFD, these bits specify the delay from the start of the horizontal non-display period to the leading edge of the HRTC pulse and FPLINE pulse respectively.

HRTC/FPLINE start position (pixels) = (HRTC/FPLINE Start Position Bits [4:0] + 1) × 8 - 2

Note
This register must be programmed such that
(REG[05h] + 1) ≥ (REG[06h] + 1) + (REG[07h] bits [3:0] +1)

HRTC/FPLINE Pulse Width Register REG[07h]							RW
HRTC Polarity Select	FPLINE Polarity Select	n/a	n/a	HRTC/ FPLINE Pulse Width Bit 3	HRTC/ FPLINE Pulse Width Bit 2	HRTC/ FPLINE Pulse Width Bit 1	HRTC/ FPLINE Pulse Width Bit 0

bit 7 HRTC Polarity Select
This bit selects the polarity of the HRTC pulse to the CRT.
When this bit = 1, the HRTC pulse is active high.
When this bit = 0, the HRTC pulse is active low.

bit 6 FPLINE Polarity Select
This bit selects the polarity of the FPLINE pulse to TFT/D-TFD or passive LCD.
When this bit = 1, the FPLINE pulse is active high for TFT/D-TFD and active low for passive LCD.
When this bit = 0, the FPLINE pulse is active low for TFT/D-TFD and active high for passive LCD.

Table 8-4: FPLINE Polarity Selection

FPLINE Polarity Select	Passive LCD FPLINE Polarity	TFT/D-TFD FPLINE Polarity
0	active high	active low
1	active low	active high

bits 3-0 HRTC/FPLINE Pulse Width Bits [3:0]
For CRT and TFT/D-TFD, these bits specify the pulse width of HRTC and FPLINE respectively.
For passive LCD, FPLINE is automatically created and these bits have no effect.

HRTC/FPLINE pulse width (pixels) = (HRTC/FPLINE Pulse Width Bits [3:0] + 1) × 8

The maximum HRTC pulse width is 128 pixels.

Note
This register must be programmed such that
(REG[05h] + 1) ≥ (REG[06h] + 1) + (REG[07h] bits [3:0] +1)

Vertical Display Height Register 0 REG[08h]							RW
Vertical Display Height Bit 7	Vertical Display Height Bit 6	Vertical Display Height Bit 5	Vertical Display Height Bit 4	Vertical Display Height Bit 3	Vertical Display Height Bit 2	Vertical Display Height Bit 1	Vertical Display Height Bit 0

Vertical Display Height Register 1 REG[09h]							RW
n/a	n/a	n/a	n/a	n/a	n/a	Vertical Display Height Bit 9	Vertical Display Height Bit 8

REG[08h] bits 7-0
REG[09h] bits 1-0

Vertical Display Height Bits [9:0]
These bits specify the vertical display height.

Vertical display height (lines) = Vertical Display Height Bits [9:0] + 1

- For CRT, TFT/D-TFD, and single passive LCD panel this register is programmed to: *(vertical resolution of the display) - 1*, e.g. EFh for a 240-line display.
- For dual-panel passive LCD not in simultaneous display mode, this register is programmed to: *((vertical resolution of the display)/2) - 1*, e.g. EFh for a 480-line display.
- For all simultaneous display modes, this register is programmed to: *(vertical resolution of the CRT) - 1*, e.g. 1DFh for a 480-line CRT.

Vertical Non-Display Period Register REG[0Ah]							RW
Vertical Non-Display Period Status (RO)	n/a	Vertical Non-Display Period Bit 5	Vertical Non-Display Period Bit 4	Vertical Non-Display Period Bit 3	Vertical Non-Display Period Bit 2	Vertical Non-Display Period Bit 1	Vertical Non-Display Period Bit 0

bit 7

Vertical Non-Display Period Status
This is a read-only status bit.
When this bit = 1, a vertical non-display period is indicated.
When this bit = 0, a vertical display period is indicated.

bits 5-0

Vertical Non-Display Period Bits [5:0]
These bits specify the vertical non-display period.

Vertical non-display period (lines) = Vertical Non-Display Period Bits [5:0] + 1

Note

This register must be programmed such that
REG[0Ah] ≥ 1 and (REG[0Ah] bits [5:0] + 1) ≥ (REG[0Bh] + 1) + (REG[0Ch] bits [2:0] + 1)

VRTC/FPFRAME Start Position Register REG[0Bh]							RW
n/a	n/a	VRTC/ FPFRAME Start Position Bit 5	VRTC/ FPFRAME Start Position Bit 4	VRTC/ FPFRAME Start Position Bit 3	VRTC/ FPFRAME Start Position Bit 2	VRTC/ FPFRAME Start Position Bit 1	VRTC/ FPFRAME Start Position Bit 0

bits 5-0 VRTC/FPFRAME Start Position Bits [5:0]

For CRT and TFT/D-TFD, these bits specify the delay in lines from the start of the vertical non-display period to the leading edge of the VRTC pulse and FPFRAME pulse respectively. For passive LCD, FPFRAME is automatically created and these bits have no effect.

VRTC/FPFRAME start position (lines) = VRTC/FPFRAME Start Position Bits [5:0] + 1

The maximum start delay is 64 lines.

Note

This register must be programmed such that
(REG[0Ah] bits [5:0] + 1) ≥ (REG[0Bh] + 1) + (REG[0Ch] bits [2:0] + 1)
For exact timing please use the timing diagrams in section 7.5

VRTC/FPFRAME Pulse Width Register REG[0Ch]							RW
VRTC Polarity Select	FPFRAME Polarity Select	n/a	n/a	n/a	VRTC/ FPFRAME Pulse Width Bit 2	VRTC/ FPFRAME Pulse Width Bit 1	VRTC/ FPFRAME Pulse Width Bit 0

bit 7 VRTC Polarity Select

This bit selects the polarity of the VRTC pulse to the CRT.
When this bit = 1, the VRTC pulse is active high.
When this bit = 0, the VRTC pulse is active low.

bit 6 FPFRAME Polarity Select

This bit selects the polarity of the FPFRAME pulse to the TFT/D-TFD or passive LCD.
When this bit = 1, the FPFRAME pulse is active high for TFT/D-TFD and active low for passive.
When this bit = 0, the FPFRAME pulse is active low for TFT/D-TFD and active high for passive.

Table 8-5: FPFRAME Polarity Selection

FPFRAME Polarity Select	Passive LCD FPFRAME Polarity	TFT/D-TFD FPFRAME Polarity
0	active high	active low
1	active low	active high

bits 2-0 VRTC/FPFRAME Pulse Width Bits [2:0]

For CRT and TFT/D-TFD, these bits specify the pulse width of VRTC and FPFRAME respectively. For passive LCD, FPFRAME is automatically created and these bits have no effect.

VRTC/FPFRAME pulse width (lines) = VRTC/FPFRAME Pulse Width Bits [2:0] + 1

Note

This register must be programmed such that
(REG[0Ah] bits [5:0] + 1) ≥ (REG[0Bh] + 1) + (REG[0Ch] bits [2:0] + 1)

8.2.4 Display Configuration Registers

Display Mode Register REG[0Dh]							RW
SwivelView Enable	Simultaneous Display Option Select Bit 1	Simultaneous Display Option Select Bit 0	Bit-per-pixel Select Bit 2	Bit-per-pixel Select Bit 1	Bit-per-pixel Select Bit 0	CRT Enable	LCD Enable

bit 7 SwivelView Enable
When this bit = 1, all CPU accesses to the display buffer are translated to provide clockwise 90° hardware rotation of the display image. Refer to *"Section 13 SwivelView"* for application and limitations.

bits 6-5 Simultaneous Display Option Select Bits [1:0]
These bits are used to select one of four different simultaneous display mode options: Normal, Line Doubling, Interlace, or Even Scan Only. The purpose of these modes is to manipulate the vertical resolution of the image so that it fits on both the CRT, typically 640x480, and LCD. The following table describes the four modes using a 640x480 CRT as an example:

Table 8-6: Simultaneous Display Option Selection

Simultaneous Display Option Select Bits [1:0]	Simultaneous Display Mode	Mode Description
00	Normal	The image is not manipulated. This mode is used when the CRT and LCD have the same resolution, e.g. 480 lines. It is necessary to suit the vertical retrace period to the CRT. This results in a lower LCD duty cycle (1/525 compared to the usual 1/481). This reduced duty cycle may result in lower contrast on the LCD.
01	Line Doubling	Each line is replicated on the CRT. This mode is used to display a 240-line image on a 240-line LCD and stretch it to a 480-line image on the CRT. The CRT has a heightened aspect ratio. It is necessary to suit the vertical retrace period to the CRT. This results in a lower LCD duty cycle (2/525 compared to the usual 1/241). This reduced duty cycle is not extreme and the contrast of the LCD image should not be greatly reduced.
10	Interlace	The odd and even fields of a 480-line image are interlaced on the LCD. This mode is used to display a 480-line image on the CRT and squash it onto a 240-line LCD. The full image is viewed on the LCD but the interlacing may create flicker. The LCD has a shortened aspect ratio. It is necessary to suit the vertical retrace period to the CRT. This results in a lower LCD duty cycle (2/525 compared to the usual 1/241). This reduced duty cycle is not extreme and the contrast of the LCD image should not be greatly reduced.
11	Even Scan Only	Only the even field of a 480-line image is displayed on the LCD. This is an alternate method to display a 480-line image on the CRT and squash it onto a 240-line LCD. Only the even scans are viewed on the LCD. The LCD has a shortened aspect ratio. It is necessary to suit the vertical retrace period to the CRT. This results in a lower LCD duty cycle (2/525 compared to the usual 1/241). This reduced duty cycle is not extreme and the contrast of the LCD image should not be greatly reduced.

Note

1. Dual Panel Considerations: When configured for a dual LCD panel and using Simultaneous Display, the Half Frame Buffer Disable, REG[1Bh] bit 0, must be set to 1. This results in a lower contrast on the LCD panel, which may require adjustment.
2. The Line doubling option is not supported with dual panel.

bits 4-2 Bit-per-pixel Select Bits [2:0]
These bits select the color depth (bpp) for the displayed data. See *"Section 10.1 Display Mode Formats"* for details of how the pixels are mapped into the image buffer.

Table 8-7: Bit-per-pixel Selection

Bit-per-pixel Select Bits [2:0]	Color Depth (bpp)
000	1 bpp
001	2 bpp
010	4 bpp
011	8 bpp
100	15 bpp
101	16 bpp
110 – 111	Reserved

bit 1 CRT Enable
This bit enables the CRT monitor.
When this bit = 1, the CRT is enabled.
When this bit = 0, the CRT is disabled.

bit 0 LCD Enable
This bit enables the LCD panel.
Programming this bit from a 0 to a 1 starts the LCD power-on sequence.
Programming this bit from a 1 to a 0 starts the LCD power-off sequence.

Screen 1 Line Compare Register 0 REG[0Eh]							RW
Screen 1 Line Compare Bit 7	Screen 1 Line Compare Bit 6	Screen 1 Line Compare Bit 5	Screen 1 Line Compare Bit 4	Screen 1 Line Compare Bit 3	Screen 1 Line Compare Bit 2	Screen 1 Line Compare Bit 1	Screen 1 Line Compare Bit 0

Screen 1 Line Compare Register 1 REG[0Fh]							RW
n/a	n/a	n/a	n/a	n/a	n/a	Screen 1 Line Compare Bit 9	Screen 1 Line Compare Bit 8

REG[0Eh] bits 7-0 Screen 1 Line Compare Bits [9:0]
REG[0Fh] bits 1-0 **These bits are set to 1 during power-on.**
The display can be split into two images: Screen 1 and Screen 2, with Screen 1 above Screen 2. This 10-bit value specifies the height of Screen 1.

Height of Screen 1 (lines) = Screen 1 Line Compare Bits [9:0] + 1

If the height of Screen 1 is less than the display height then the remainder of the display is taken up by Screen 2. For normal operation (no split screen) this register must be set greater than the Vertical Display Height register (e.g. set to the reset value of 3FFh).

See *"Display Configuration"* for details.

Screen 1 Display Start Address Register 0 REG[10h] RW							
Start Address Bit 7	Start Address Bit 6	Start Address Bit 5	Start Address Bit 4	Start Address Bit 3	Start Address Bit 2	Start Address Bit 1	Start Address Bit 0

Screen 1 Display Start Address Register 1 REG[11h] RW							
Start Address Bit 15	Start Address Bit 14	Start Address Bit 13	Start Address Bit 12	Start Address Bit 11	Start Address Bit 10	Start Address Bit 9	Start Address Bit 8

Screen 1 Display Start Address Register 2 REG[12h] RW							
n/a	n/a	n/a	n/a	Start Address Bit 19	Start Address Bit 18	Start Address Bit 17	Start Address Bit 16

REG[10h] bits 7-0
REG[11h] bits 7-0
REG[12h] bits 3-0

Screen 1 Start Address Bits [19:0]
These registers form the 20-bit address for the starting word of the Screen 1 image in the display buffer.
Note that this is a word address.
A combination of this register and the Pixel Panning register (REG[18h]) can be used to uniquely identify the start (top left) pixel within the Screen 1 image stored in the display buffer.

See "*Display Configuration*" for details.

Screen 2 Display Start Address Register 0 REG[13h] RW							
Start Address Bit 7	Start Address Bit 6	Start Address Bit 5	Start Address Bit 4	Start Address Bit 3	Start Address Bit 2	Start Address Bit 1	Start Address Bit 0

Screen 2 Display Start Address Register 1 REG[14h] RW							
Start Address Bit 15	Start Address Bit 14	Start Address Bit 13	Start Address Bit 12	Start Address Bit 11	Start Address Bit 10	Start Address Bit 9	Start Address Bit 8

Screen 2 Display Start Address Register 2 REG[15h] RW							
n/a	n/a	n/a	n/a	Start Address Bit 19	Start Address Bit 18	Start Address Bit 17	Start Address Bit 16

REG[13h] bits 7-0
REG[14h] bits 7-0
REG[15h] bits 3-0

Screen 2 Start Address Bits [19:0]
These registers form the 20-bit address for the starting word of the Screen 2 image in the display buffer.
Note that this is a word address.
A combination of this register and the Pixel Panning register (REG[18h]) can be used to uniquely identify the start (top left) pixel within the Screen 2 image stored in the display buffer.

See "*Display Configuration*" for details.

Memory Address Offset Register 0 REG[16h]							RW
Memory Address Offset Bit 7	Memory Address Offset Bit 6	Memory Address Offset Bit 5	Memory Address Offset Bit 4	Memory Address Offset Bit 3	Memory Address Offset Bit 2	Memory Address Offset Bit 1	Memory Address Offset Bit 0

Memory Address Offset Register 1 REG[17h]							RW
n/a	n/a	n/a	n/a	n/a	Memory Address Offset Bit 10	Memory Address Offset Bit 9	Memory Address Offset Bit 8

REG[16h] bits 7-0 Memory Address Offset Bits [10:0]
REG[17h] bits 2-0 These bits form the 11-bit address offset from the starting word of line n to the starting word of line n+1. This value is applied to both Screen 1 and Screen 2.
Note that this value is in words.
A virtual image can be formed by setting this register to a value greater than the width of the display. The displayed image is a window into the larger virtual image.

See “Section 10 *Display Configuration*” for details.

Pixel Panning Register REG[18h]							RW
Screen 2 Pixel Panning Bit 3	Screen 2 Pixel Panning Bit 2	Screen 2 Pixel Panning Bit 1	Screen 2 Pixel Panning Bit 0	Screen 1 Pixel Panning Bit 3	Screen 1 Pixel Panning Bit 2	Screen 1 Pixel Panning Bit 1	Screen 1 Pixel Panning Bit 0

This register is used to control the horizontal pixel panning of Screen 1 and Screen 2. Each screen can be independently panned to the left by programming its respective Pixel Panning Bits to a non-zero value. The value represents the number of pixels panned. The maximum pan value is dependent on the display mode.

Table 8-8: Pixel Panning Selection

Display Mode	Maximum Pan Value	Pixel Panning Bits active
1 bpp	16	Bits [3:0]
2 bpp	8	Bits [2:0]
4 bpp	4	Bits [1:0]
8 bpp	1	Bit 0
15/16 bpp	0	none

Smooth horizontal panning can be achieved by a combination of this register and the Display Start Address registers.

See “Section 10 *Display Configuration*” for details.

bits 7-4 Screen 2 Pixel Panning Bits [3:0]
Pixel panning bits for screen 2.

bits 3-0 Screen 1 Pixel Panning Bits [3:0]
Pixel panning bits for screen 1.

8.2.5 Clock Configuration Register

Clock Configuration Register REG[19h]							RW
Reserved	n/a	n/a	n/a	n/a	MCLK Divide Select	PCLK Divide Select Bit 1	PCLK Divide Select Bit 0

bit 7 Reserved
This bit must be set to 0.

Note
There must always be a source clock at CLKI.

bit 2 MCLK Divide Select
When this bit = 1 the MCLK frequency is half of its source frequency.
When this bit = 0 the MCLK frequency is equal to its source frequency.
The MCLK frequency should always be set to the maximum frequency allowed by the DRAM; this provides maximum performance and minimum overall system power consumption.

bits 1-0 PCLK Divide Select Bits [1:0]
These bits select the MCLK: PCLK frequency ratio

Table 8-9: PCLK Divide Selection

PCLK Divide Select Bits [1:0]	MCLK: PCLK Frequency Ratio
00	1: 1
01	2: 1
10	3: 1
11	4: 1

See section on "*Maximum MCLK:PCLK Frequency Ratios*" for selection of clock ratios.

8.2.6 Power Save Configuration Registers

Power Save Configuration Register REG[1Ah]							RW
Power Save Status RO	n/a	n/a	n/a	LCD Power Disable	Suspend Refresh Select Bit 1	Suspend Refresh Select Bit 0	Software Suspend Mode Enable

bit 7 Power Save Status
This is a read-only status bit.
This bit indicates the power-save state of the chip.
When this bit = 1, the panel has been powered down and the memory controller is either in self refresh mode or is performing only CAS-before-RAS refresh cycles.
When this bit = 0, the chip is either powered up, in transition of powering up, or in transition of powering down. See Section 15 *Power Save Modes* for details.

bit 3 LCD Power Disable
This bit is used to override the panel on/off sequencing logic.
When this bit = 0 the LCDPWR output is controlled by the panel on/off sequencing logic.
When this bit = 1 the LCDPWR output is directly forced to the off state.

The LCDPWR "On/Off" polarity is configured by MD10 at the rising edge of RESET# (MD10 = 0 configures LCDPWR = 0 as the Off state; MD10 = 1 configures LCDPWR = 1 as the Off state).

bits 2-1 Suspend Refresh Select Bits [1:0]
These bits specify the type of DRAM refresh to use in Suspend mode.

Table 8-10: Suspend Refresh Selection

Suspend Refresh Select Bits [1:0]	DRAM Refresh Type
00	CAS-before-RAS (CBR) refresh
01	Self-Refresh
1X	No Refresh

Note
These bits should not be changed while suspend mode is active.

bit 0 Software Suspend Mode Enable
When this bit = 1 software Suspend mode is enabled.
When this bit = 0 software Suspend mode is disabled.
See *Section 15 Power Save Modes* for details.

8.2.7 Miscellaneous Registers

Miscellaneous Register REG[1Bh]							RW
Host Interface Disable	n/a	n/a	n/a	n/a	n/a	n/a	Half Frame Buffer Disable

bit 7 Host Interface Disable
This bit is set to 1 during power-on/reset.
This bit must be programmed to 0 to enable the Host Interface. When this bit is high, all memory and all registers except REG[1Ah] (read-only) and REG[1Bh] are inaccessible.

bit 0 Half Frame Buffer Disable
This bit is used to disable the Half Frame Buffer.
When this bit = 1, the Half Frame Buffer is disabled.
When this bit = 0, the Half Frame Buffer is enabled.
When a single panel is selected, the Half Frame Buffer is automatically disabled and this bit has no effect.

The half frame buffer is needed to fully support dual panels. Disabling the Half Frame Buffer reduces memory bandwidth requirements and increases the supportable pixel clock frequency, but results in reduced contrast on the LCD panel (the duty cycle of the LCD is halved). This mode is not normally used except under special circumstances such as simultaneous display on a CRT and dual panel LCD. When this mode is used the Alternate Frame Rate Modulation scheme should be used (see REG[31h]). For details on Frame Rate calculation see Section 14.2, "Frame Rate Calculation" on page 141.

MD Configuration Readback Register 0 REG[1Ch]							RO
MD[7] Status	MD[6] Status	MD[5] Status	MD[4] Status	MD[3] Status	MD[2] Status	MD[1] Status	MD[0] Status

MD Configuration Readback Register 1 REG[1Dh]							RO
MD[15] Status	MD[14] Status	MD[13] Status	MD[12] Status	MD[11] Status	MD[10] Status	MD[9] Status	MD[8] Status

REG[1Ch] bits 7-0 MD[15:0] Configuration Status
REG[1Dh] bits 7-0 These are read-only status bits for the MD[15:0] pins configuration status at the rising edge of RESET#. MD[15:0] are used to configure the chip at the rising edge of RESET# – see *Pin Descriptions* and *Summary of Configuration Options* for details.

General IO Pins Configuration Register 0 REG[1Eh]							RW
n/a	n/a	n/a	n/a	GPIO3 Pin IO Config.	GPIO2 Pin IO Config.	GPIO1 Pin IO Config.	n/a

Pins MA9, MA10, MA11 are multi-functional – they can be DRAM address outputs or general purpose IO dependent on the DRAM type. MD[7:6] are used to identify the DRAM type and configure these pins as follows:

Table 8-11: MA/GPIO Pin Functionality

MD[7:6] at rising edge of RESET#	**Pin Function**		
	MA9	**MA10**	**MA11**
00	GPIO3	GPIO1	GPIO2
01	MA9	GPIO1	GPIO2
10	MA9	GPIO1	GPIO2
11	MA9	MA10	MA11

These bits are used to control the direction of these pins when they are used as general purpose IO. These bits have no effect when the pins are used as DRAM address outputs.

bit 3 GPIO3 Pin IO Configuration
When this bit = 1, the GPIO3 pin is configured as an output pin.
When this bit = 0 (default), the GPIO3 pin is configured as an input pin.

bit 2 GPIO2 Pin IO Configuration
When this bit = 1, the GPIO2 pin is configured as an output pin.
When this bit = 0 (default), the GPIO2 pin is configured as an input pin.

bit 1 GPIO1 Pin IO Configuration
When this bit = 1, the GPIO1 pin is configured as an output pin.
When this bit = 0 (default), the GPIO1 pin is configured as an input pin.

General IO Pins Configuration Register 1 REG[1Fh]							RW
n/a	n/a	n/a	n/a	n/a	n/a	n/a	n/a

This register position is reserved for future use.

General IO Pins Control Register 0 REG[20h]							RW
n/a	n/a	n/a	n/a	GPIO3 Pin IO Status	GPIO2 Pin IO Status	GPIO1 Pin IO Status	n/a

bit 3 GPIO3 Pin IO Status
When GPIO3 is configured as an output (see REG[1Eh]), a “1” in this bit drives GPIO3 high and a “0” in this bit drives GPIO3 low.
When GPIO3 is configured as an input, a read from this bit returns the status of GPIO3.

bit 2 GPIO2 Pin IO Status
When GPIO2 is configured as an output (see REG[1Eh]), a “1” in this bit drives GPIO2 high and a “0” in this bit drives GPIO2 low.
When GPIO2 is configured as an input, a read from this bit returns the status of GPIO2.

bit 1 GPIO1 Pin IO Status
When GPIO1 is configured as an output (see REG[1Eh]), a “1” in this bit drives GPIO1 high and a “0” in this bit drives GPIO1 low.
When GPIO1 is configured as an input, a read from this bit returns the status of GPIO1.

General IO Pins Control Register 1 REG[21h]							RW
GPO Control	n/a	n/a	n/a	n/a	n/a	n/a	n/a

bit 7 GPO Control
This bit is used to control the state of the SUSPEND# pin when it is configured as General Purpose Output (GPO). When this bit = 0, the GPO output is set to the reset state. When this bit = 1, the GPO output is set to the inverse of the reset state. For information on the reset state of this pin see “Miscellaneous Interface Pin Descriptions“ on page 32 and “Summary of Power On/Reset Options“ on page 33.

Performance Enhancement Register 0 REG[22h]							RW
Reserved	RC Timing Value Bit 1	RC Timing Value Bit 0	RAS#-to-CAS# Delay Value	RAS# Precharge Timing Value Bit 1	RAS# Precharge Timing Value Bit 0	Reserved	Reserved

Note

Changing this register to non-zero value, or to a different non-zero value, should be done only when there are no read/write DRAM cycles. This condition occurs when all of the following are true: the Display FIFO is disabled (REG[23h] bit 7 = 1), and the Half Frame Buffer is disabled (REG[1Bh] bit 0 = 1), and the Ink/Cursor is inactive (Reg[27h] bits 7-6 = 00). This condition also occurs when the CRT and LCD enable bits (Reg[0Dh] bits 1-0) have remained 0 since chip reset. For further programming information, see *S1D13505 Programming Notes and Examples*, document number X23A-G-003-xx.

bit 7 Reserved

bits 6-5 RC Timing Value (N_{RC}) Bits [1:0]

These bits select the DRAM random-cycle timing parameter, t_{RC}. These bits specify the number (N_{RC}) of MCLK periods (T_M) used to create t_{RC}. N_{RC} should be chosen to meet t_{RC} as well as t_{RAS}, the RAS pulse width. Use the following two formulae to calculate N_{RC} then choose the larger value. Note, these formulae assume an MCLK duty cycle of 50 +/- 5%.

N_{RC} = Round-Up (t_{RC}/T_M)

N_{RC} = Round-Up ($t_{RAS}/T_M + N_{RP}$) if N_{RP} = 1 or 2
= Round-Up (t_{RAS}/T_M + 1.55) if N_{RP} = 1.5

The resulting t_{RC} is related to N_{RC} as follows:

t_{RC} = (N_{RC}) T_M

Table 8-12: Minimum Memory Timing Selection

REG[22h] bits [6:5]	**N_{RC}**	**Minimum Random Cycle Width (t_{RC})**
00	5	5
01	4	4
10	3	3
11	Reserved	Reserved

bit 4

RAS#-to-CAS# Delay Value (N_{RCD})
This bit selects the DRAM RAS#-to-CAS# delay parameter, t_{RCD}. This bit specifies the number (N_{RCD}) of MCLK periods (T_M) used to create t_{RCD}. N_{RCD} must be chosen to satisfy the RAS# access time, t_{RAC}. Note, these formulae assume an MCLK duty cycle of 50 +/- 5%.

N_{RCD}	= Round-Up((t_{RAC} + 5)/T_M - 1)	if EDO and N_{RP} = 1 or 2
	= 2	if EDO and N_{RP} = 1.5
	= Round-Up(t_{RAC}/T_M - 1)	if FPM and N_{RP} = 1 or 2
	= Round-Up(t_{RAC}/T_M - 0.45)	if FPM and N_{RP} = 1.5

Note that for EDO-DRAM and N_{RP} = 1.5, this bit is automatically forced to 0 to select 2 MCLK for N_{RCD}. This is done to satisfy the CAS# address setup time, t_{ASC}.

The resulting t_{RC} is related to N_{RCD} as follows:

t_{RCD}	= (N_{RCD}) T_M	if EDO and N_{RP} = 1 or 2
t_{RCD}	= (1.5) T_M	if EDO and N_{RP} = 1.5
t_{RCD}	= (N_{RCD} + 0.5) T_M	if FPM and N_{RP} = 1 or 2
t_{RCD}	= (N_{RCD}) T_M	if FPM and N_{RP} = 1.5

Table 8-13: RAS#-to-CAS# Delay Timing Select

REG[22h] bit 4	N_{RCD}	RAS#-to-CAS# Delay (t_{RCD})
0	2	2
1	1	1

bits 3-2

RAS# Precharge Timing Value (N_{RP}) Bits [1:0]
Minimum Memory Timing for RAS# precharge
These bits select the DRAM RAS# Precharge timing parameter, t_{RP}. These bits specify the number (N_{RP}) of MCLK periods (T_M) used to create t_{RP} – see the following formulae. Note, these formulae assume an MCLK duty cycle of 50 +/- 5%.

N_{RP}	= 1	if (t_{RP}/T_M) < 1
	= 1.5	if 1 ≤ (t_{RP}/T_M) < 1.45
	= 2	if (t_{RP}/T_M) ≥ 1.45

The resulting t_{RC} is related to N_{RP} as follows:

t_{RP}	= (N_{RP} + 0.5) T_M	if FPM refresh cycle and N_{RP} = 1 or 2
t_{RP}	= (N_{RP}) T_M	for all other

bits 1-0 Reserved
These bits must be set to 0.

Table 8-14: RAS Precharge Timing Select

REG[22h] bits [3:2]	N_{RP}	RAS# Precharge Width (t_{RP})
00	2	2
01	1.5	1.5
10	1	1
11	Reserved	Reserved

Optimal DRAM Timing

The following table contains the optimally programmed values of N_{RC}, N_{RP}, and N_{RCD} for different DRAM types, at maximum MCLK frequencies.

Table 8-15: Optimal N_{RC}, N_{RP}, and N_{RCD} values at maximum MCLK frequency

DRAM Type	DRAM Speed (ns)	T_M (ns)	N_{RC} (#MCLK)	N_{RP} (#MCLK)	N_{RCD} (#MCLK)
EDO	50	25	4	1.5	2
	60	30	4	1.5	2
	70	33	5	2	2
FPM	60	40	4	1.5	2
	70	50	3	1.5	1

bit 0 Reserved
This reserved bit must be set to 0.

Performance Enhancement Register 1 REG[23h] RW							
Display FIFO Disable	CPU to Memory Wait State Bit 1	CPU to Memory Wait State Bit 0	Display FIFO Threshold Bit 4	Display FIFO Threshold Bit 3	Display FIFO Threshold Bit 2	Display FIFO Threshold Bit 1	Display FIFO Threshold Bit 0

bit 7 Display FIFO Disable
When this bit = 1 the display FIFO is disabled and all data outputs are forced to zero (i.e., the screen is blanked). This accelerates screen updates by allocating more memory bandwidth to CPU accesses.
When this bit = 0 the display FIFO is enabled.

Note

For further performance increase in dual panel mode disable the half frame buffer (see section 8.2.7) and disable the cursor (see section 8.2.9).

bit 6-5 CPU to Memory Wait State Bits [1:0]

These bits are used to optimize the handshaking between the host interface and the memory controller. The bits should be set according to the relationship between BCLK and MCLK – see the table below where T_B and T_M are the BCLK and MCLK periods respectively.

Table 8-16: Minimum Memory Timing Selection

Wait State Bits [1:0]	Condition
00	no restrictions (default)
01	$2T_M$ - 4ns > T_B
10	undefined
11	undefined

bits 4-0 Display FIFO Threshold Bits [4:0]

These bits specify the display FIFO depth required to sustain uninterrupted display fetches. When these bits are all "0", the display FIFO depth is calculated automatically.

These bits should always be set to 0, except in the following configurations:

Landscape mode at 15/16 bpp (with MCLK=PCLK),

Portrait mode at 8/16 bpp (with MCLK=PCLK).

When in the above configurations, a value of 1Bh should be used.

Note

The utility 13505CFG will, given the correct configuration values, automatically generate the correct values for the Performance Enhancement Registers.

8.2.8 Look-Up Table Registers

Look-Up Table Address Register REG[24h]							RW
LUT Address Bit 7	LUT Address Bit 6	LUT Address Bit 5	LUT Address Bit 4	LUT Address Bit 3	LUT Address Bit 2	LUT Address Bit 1	LUT Address Bit 0

bits 7-0 LUT Address Bits [7:0]

These 8 bits control a pointer into the Look-Up Tables (LUT). The S1D13505 has three 256-position, 4-bit wide LUTs, one for each of red, green, and blue – refer to *"Look-Up Table Architecture"* for details.

This register selects which LUT entry is read/write accessible through the LUT Data Register (REG[26h]). Writing the LUT Address Register automatically sets the pointer to the Red LUT. Accesses to the LUT Data Register automatically increment the pointer.

For example, writing a value 03h into the LUT Address Register sets the pointer to R[3]. A subsequent access to the LUT Data Register accesses R[3] and moves the pointer onto G[3]. Subsequent accesses to the LUT Data Register move the pointer onto B[3], R[4], G[4], B[4], R[5], etc. Note that the RGB data is inserted into the LUT after the Blue data is written, i.e. all three colors must be written before the LUT is updated.

Look-Up Table Data Register REG[26h]							RW
LUT Data Bit 3	LUT Data Bit 2	LUT Data Bit 1	LUT Data Bit 0	n/a	n/a	n/a	n/a

bits 7-4 LUT Data

This register is used to read/write the RGB Look-Up Tables. This register accesses the entry at the pointer controlled by the Look-Up Table Address Register (REG[24h]) – see above.

Accesses to the Look-Up Table Data Register automatically increment the pointer.Note that the RGB data is inserted into the LUT after the Blue data is written, i.e. all three colors must be written before the LUT is updated.

8.2.9 Ink/Cursor Registers

Ink/Cursor Control Register REG[27h]							RW
Ink/Cursor Mode Bit 1	Ink/Cursor Mode Bit 0	n/a	n/a	Cursor High Threshold Bit 3	Cursor High Threshold Bit 2	Cursor High Threshold Bit 1	Cursor High Threshold Bit 0

bit 7-6 Ink/Cursor Control Bits [1:0]

These bits select the operating mode of the Ink/Cursor circuitry. See table below

Table 8-17: Ink/Cursor Selection

REG[27h]		**Operating Mode**
Bit 7	**Bit 6**	
0	0	inactive
0	1	Cursor
1	0	Ink
1	1	reserved

bit 3-0 Ink/Cursor FIFO Threshold Bits [3:0]

These bits specify the Ink/Cursor FIFO depth required to sustain uninterrupted display fetches. When these bits are all 0, the Ink/Cursor FIFO depth is calculated automatically.

Cursor X Position Register 0 REG[28h]							RW
Cursor X Position Bit 7	Cursor X Position Bit 6	Cursor X Position Bit 5	Cursor X Position Bit 4	Cursor X Position Bit 3	Cursor X Position Bit 2	Cursor X Position Bit 1	Cursor X Position Bit 0

Cursor X Position Register 1 REG[29h]							RW
Reserved	n/a	n/a	n/a	n/a	n/a	Cursor X Position Bit 9	Cursor X Position Bit 8

REG[29] bit 7 Reserved

This bit must be set to 0.

REG[28] bits 7-0 Cursor X Position Bits [9:0]
REG[29] bits 1-0 In Cursor mode, this 10-bit register is used to program the horizontal pixel position of the Cursor's top left pixel.
This register must be set to 0 in Ink mode.

Note

The Cursor X Position register must be set during VNDP (vertical non-display period). Check the VNDP status bit (REG[0Ah] bit 7) to determine if you are in VNDP, then update the register.

Cursor Y Position Register 0 REG[2Ah]							RW
Cursor Y Position Bit 7	Cursor Y Position Bit 6	Cursor Y Position Bit 5	Cursor Y Position Bit 4	Cursor Y Position Bit 3	Cursor Y Position Bit 2	Cursor Y Position Bit 1	Cursor Y Position Bit 0

Cursor Y Position Register 1 REG[2Bh]							RW
Reserved	n/a	n/a	n/a	n/a	n/a	Cursor Y Position Bit 9	Cursor Y Position Bit 8

REG[2Bh] bit 7 Reserved
This bit must be set to 0.

REG[2Ah] bits 7-0 Cursor Y Position Bits [9:0]
REG[2Bh] bits 1-0 In Cursor mode, this 10-bit register is used to program the vertical pixel position of the Cursor's top left pixel.
This register must be set to 0 in Ink mode.

Note

The Cursor Y Position register must be set during VNDP (vertical non-display period). Check the VNDP status bit (REG[0Ah] bit 7) to determine if you are in VNDP, then update the register.

Ink/Cursor Color 0 Register 0 REG[2Ch]							RW
Cursor Color 0 Bit 7	Cursor Color 0 Bit 6	Cursor Color 0 Bit 5	Cursor Color 0 Bit 4	Cursor Color 0 Bit 3	Cursor Color 0 Bit 2	Cursor Color 0 Bit 1	Cursor Color 0 Bit 0

Ink/Cursor Color 0 Register 1 REG[2Dh]							RW
Cursor Color 0 Bit 15	Cursor Color 0 Bit 14	Cursor Color 0 Bit 13	Cursor Color 0 Bit 12	Cursor Color 0 Bit 11	Cursor Color 0 Bit 10	Cursor Color 0 Bit 9	Cursor Color 0 Bit 8

REG[2C] bits 7:0 Ink/Cursor Color 0 Bits [15:0]
REG[2D] bits 7:0 These bits define the 5-6-5 RGB Ink/Cursor color 0.

Ink/Cursor Color 1 Register 0 REG[2Eh] RW							
Cursor Color 1 Bit 7	Cursor Color 1 Bit 6	Cursor Color 1 Bit 5	Cursor Color 1 Bit 4	Cursor Color 1 Bit 3	Cursor Color 1 Bit 2	Cursor Color 1 Bit 1	Cursor Color 1 Bit 0

Ink/Cursor Color 1 Register 1 REG[2Fh] RW							
Cursor Color 1 Bit 15	Cursor Color 1 Bit 14	Cursor Color 1 Bit 13	Cursor Color 1 Bit 12	Cursor Color 1 Bit 11	Cursor Color 1 Bit 10	Cursor Color 1 Bit 9	Cursor Color 1 Bit 8

REG[2E] bits 7:0 Ink/Cursor Color 1 Bits [15:0]
REG[2F] bits 7:0 These bits define the 5-6-5 RGB Ink/Cursor color 1

Ink/Cursor Start Address Select Register REG[30h] RW							
Ink/Cursor Start Address Select Bit 7	Ink/Cursor Start Address Select Bit 6	Ink/Cursor Start Address Select Bit 5	Ink/Cursor Start Address Select Bit 4	Ink/Cursor Start Address Select Bit 3	Ink/Cursor Start Address Select Bit 2	Ink/Cursor Start Address Select Bit 1	Ink/Cursor Start Address Select Bit 0

bits 7-0 Ink/Cursor Start Address Select Bits [7:0]
These bits define the start address for the Ink/Cursor buffer. The Ink/Cursor buffer must be positioned where it does not conflict with the image buffer and half-frame buffer – see Memory Mapping for details.

The start address for the Ink/Cursor buffer is programmed as shown in the following table where Display Buffer Size represents the size in bytes of the attached DRAM device (see MD[7:6] in *Summary of Configuration Options*):

Table 8-18: Ink/Cursor Start Address Encoding

Ink/Cursor Start Address Bits [7:0]	Start Address (Bytes)
0	Display Buffer Size - 1024
n = 255...1	Display Buffer Size - (n × 8192)

The Ink/Cursor image is stored contiguously. The address offset from the starting word of line n to the starting word of line n+1 is calculated as follows:
Ink Address Offset (words) = REG[04h] + 1
Cursor Address Offset (words) = 8

Alternate FRM Register REG[31h]							RW
Alternate FRM Bit 7	Alternate FRM Bit 6	Alternate FRM Bit 5	Alternate FRM Bit 4	Alternate FRM Bit 3	Alternate FRM Bit 2	Alternate FRM Bit 1	Alternate FRM Bit 0

bits 7-0 Alternate Frame Rate Modulation Select

Register that controls the alternate FRM scheme. When all bits are set to zero, the default FRM is selected. For single passive, or dual passive with the half frame buffer enabled, either the original or the alternate FRM scheme may be used. The alternate FRM scheme may produce more visually appealing output. The following table shows the recommended alternate FRM scheme values.

Table 8-19: Recommended Alternate FRM Scheme

Panel Mode	Register Value
Single Passive	0000 0000 or 1111 1111
Dual Passive w/Half Frame Buffer Enabled	0000 0000 or 1111 1010
Dual Passive w/Half Frame Buffer Disabled	1111 1111

9 Display Buffer

The system addresses the display buffer through the CS#, M/R#, and AB[20:0] input pins. When CS# = 0 and M/R# = 1, the display buffer is addressed by bits AB[20:0]. See the table below:

Table 9-1: S1D13505 Addressing

CS#	M/R#	Access
0	0	Register access: • REG[00h] is addressed when AB[5:0] = 0 • REG[01h] is addressed when AB[5:0] = 1 • REG[n] is addressed when AB[5:0] = n
0	1	Memory access: the 2M byte display buffer is addressed by AB[20:0]
1	X	S1D13505 not selected

The display buffer address space is always 2M bytes. However, the physical display buffer may be either 512K bytes or 2M bytes – see *"Summary of Configuration Options"*.

The display buffer can contain an image buffer, one or more Ink/Cursor buffers, and a half-frame buffer.

A 512K byte display buffer is replicated in the 2M byte address space – see the figure below.

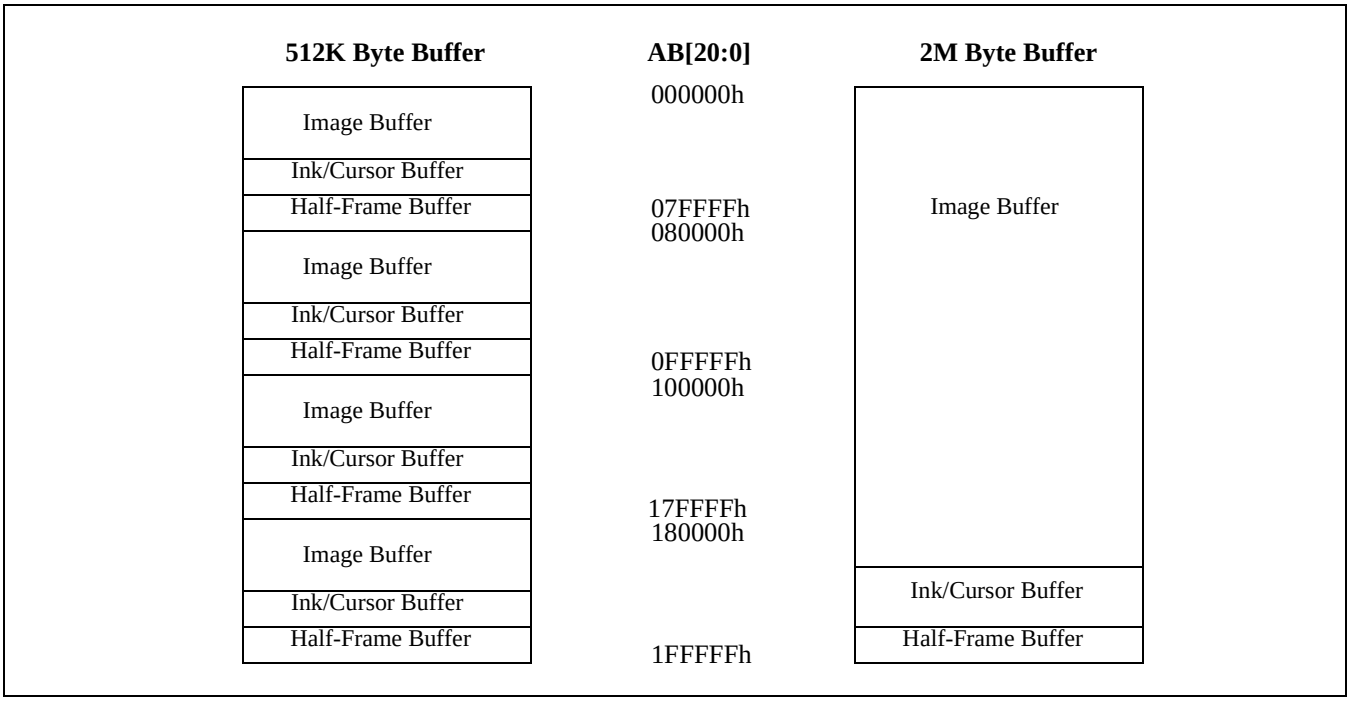

Figure 9-1: Display Buffer Addressing

9.1 Image Buffer

The image buffer contains the formatted display mode data – see *"Display Mode Data Formats"*.

The displayed image(s) could take up only a portion of this space; the remaining area may be used for multiple images – possibly for animation or general storage. See "Display Configuration" on page 124 for the relationship between the image buffer and the display.

9.2 Ink/Cursor Buffers

The Ink/Cursor buffers contain formatted image data for the Ink or Cursor. There may be several Ink/Cursor images stored in the display buffer but only one may be active at any given time. See "Ink/Cursor Architecture" on page 133 for details.

9.3 Half Frame Buffer

In dual panel mode, with the half frame buffer enabled, the top of the display buffer is allocated to the half-frame buffer. The size of the half frame buffer is a function of the panel resolution and whether the panel is color or monochrome type:

Half Frame Buffer Size (in bytes) = (panel width x panel length) * factor / 16

where factor = 4 for color panel
= 1 for monochrome panel

For example, for a 640x480 8 bpp color panel the half frame buffer size is 75K bytes. In a 512K byte display buffer, the half-frame buffer resides from 6D400h to 7FFFFh. In a 2M byte display buffer, the half-frame buffer resides from 1ED400h to 1FFFFFh.

10 Display Configuration

10.1 Display Mode Data Format

The following diagrams show the display mode data formats for a little-endian system.

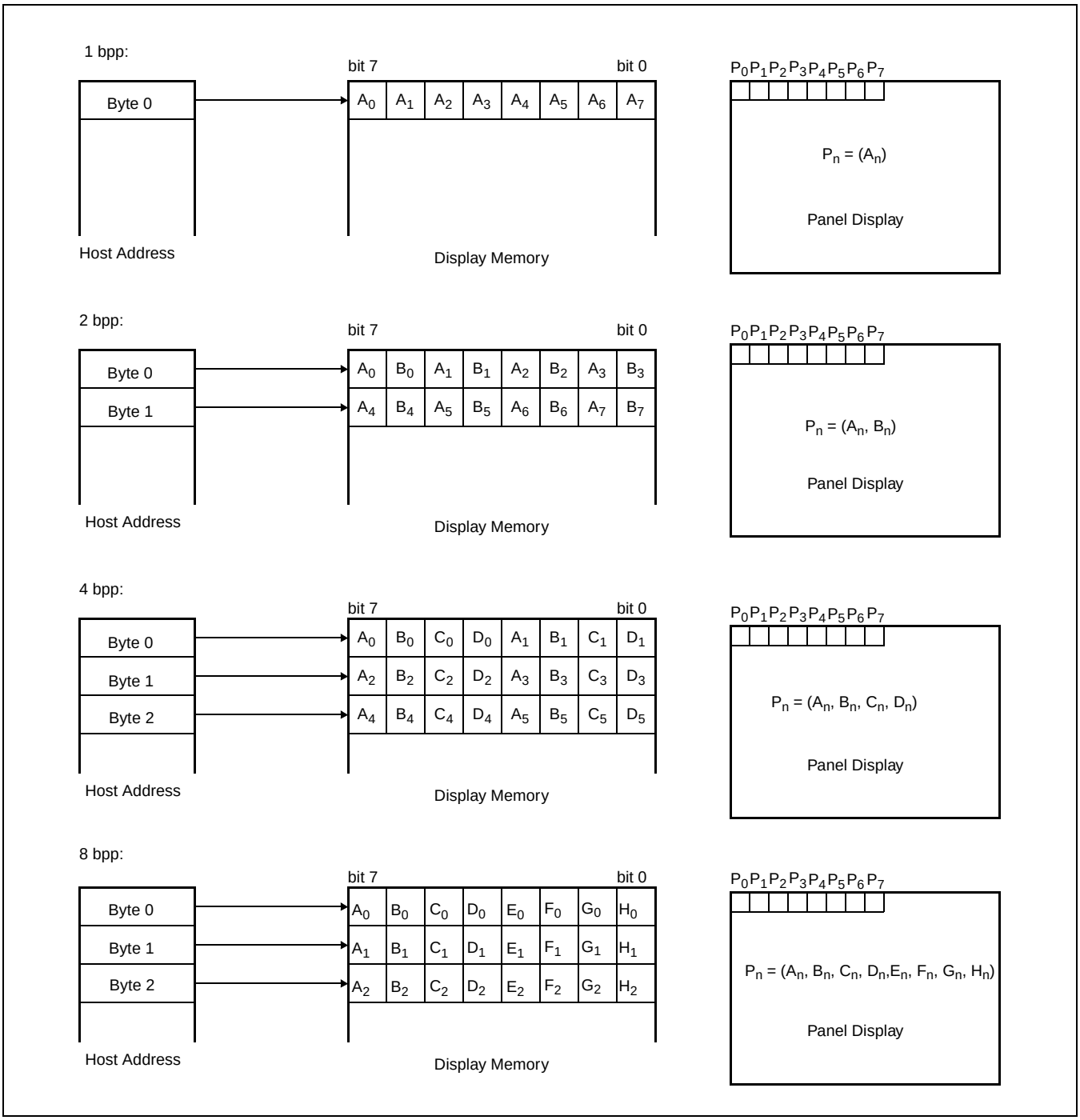

Figure 10-1: 1/2/4/8 Bit-per-pixel Format Memory Organization

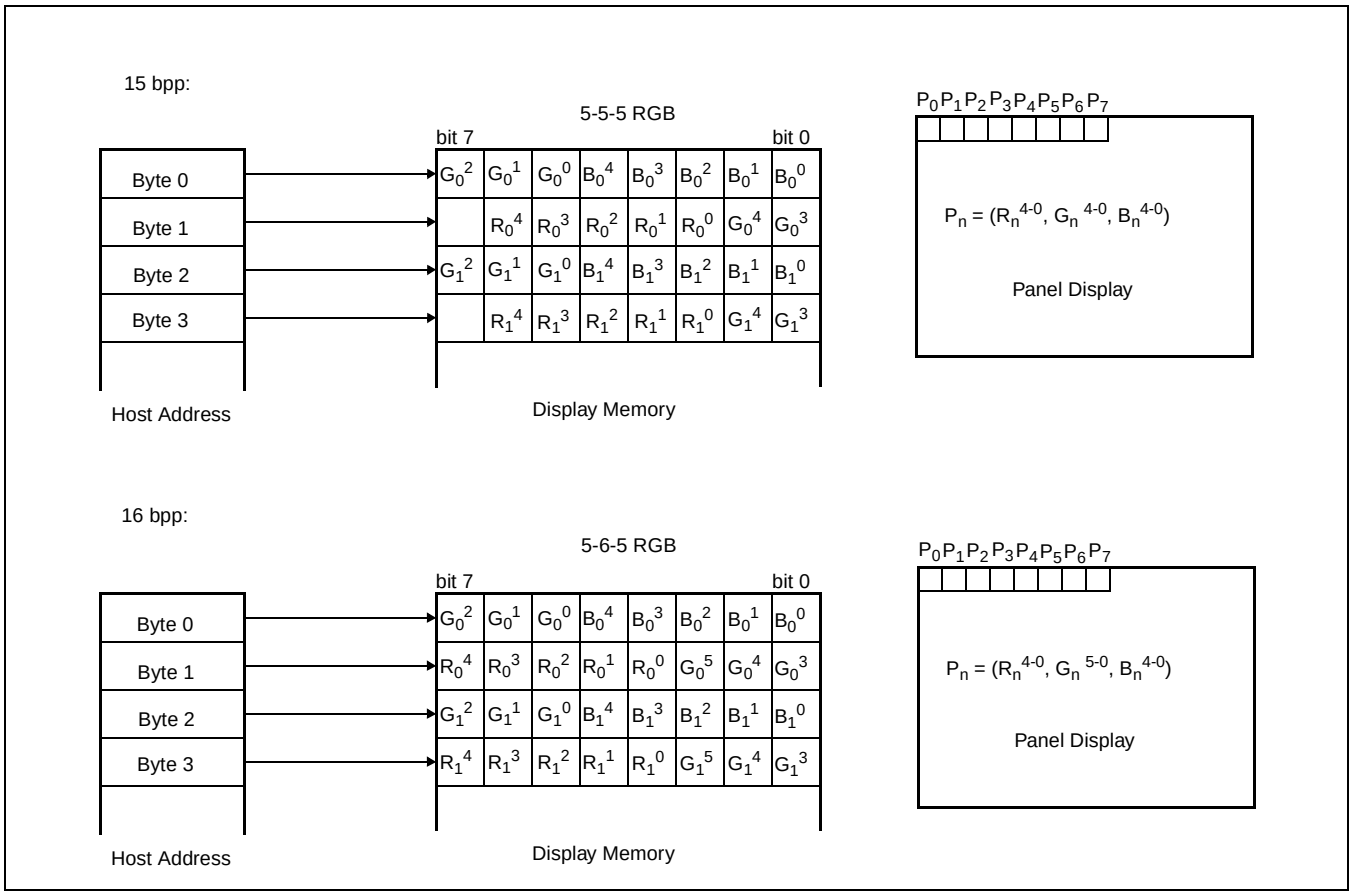

Figure 10-2: 15/16 Bit-per-pixel Format Memory Organization

Note

1. The Host-to-Display mapping shown here is for a little-endian system.
2. For 15/16 bpp formats, R_n, G_n, B_n represent the red, green, and blue color components.

10.2 Image Manipulation

The figure below shows how Screen 1 and 2 images are stored in the image buffer and positioned on the display. Screen 1 and Screen 2 can be parts of a larger virtual image or images.

- (REG[17h],REG[16h]) defines the width of the virtual image(s)
- (REG[12h],REG[11h],REG[10]) defines the starting word of the Screen 1, (REG[15h],REG[14h],REG[13]) defines the starting word of the Screen 2
- REG[18h] bits [3:0] define the starting pixel within the starting word for Screen 1, REG[18h] bits [7:4] define the starting pixel within the starting word for Screen 2
- (REG[0Fh],REG[0Eh]) define the last line of Screen 1, the remainder of the display is taken up by Screen 2

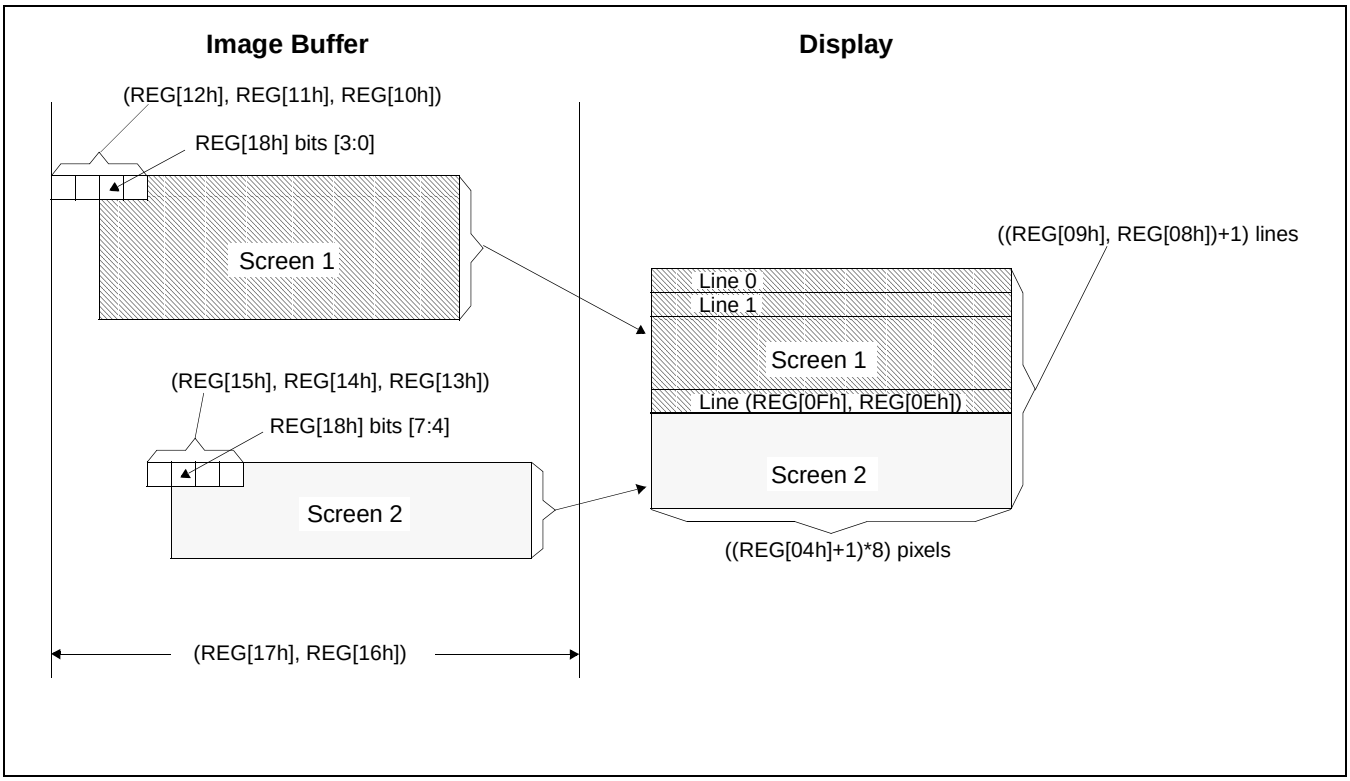

Figure 10-3: Image Manipulation

11 Look-Up Table Architecture

The following figures are intended to show the display data output path only.

11.1 Monochrome Modes

The green Look-Up Table (LUT) is used for all monochrome modes.

1 Bit-per-pixel Monochrome mode

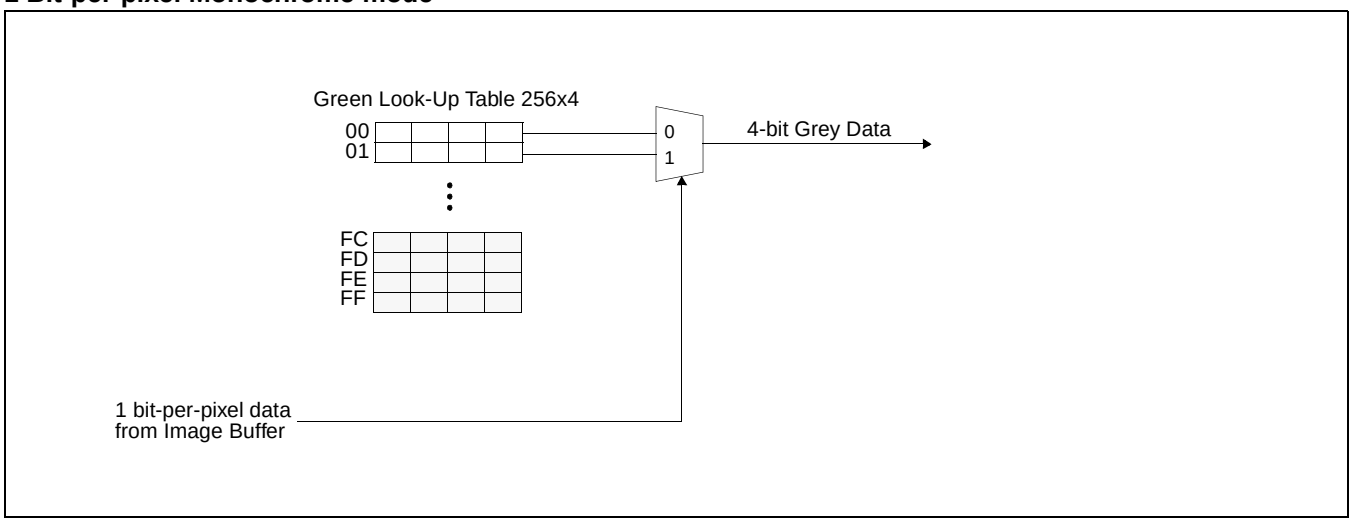

Figure 11-1: 1 Bit-per-pixel Monochrome Mode Data Output Path

2 Bit-per-pixel Monochrome Mode

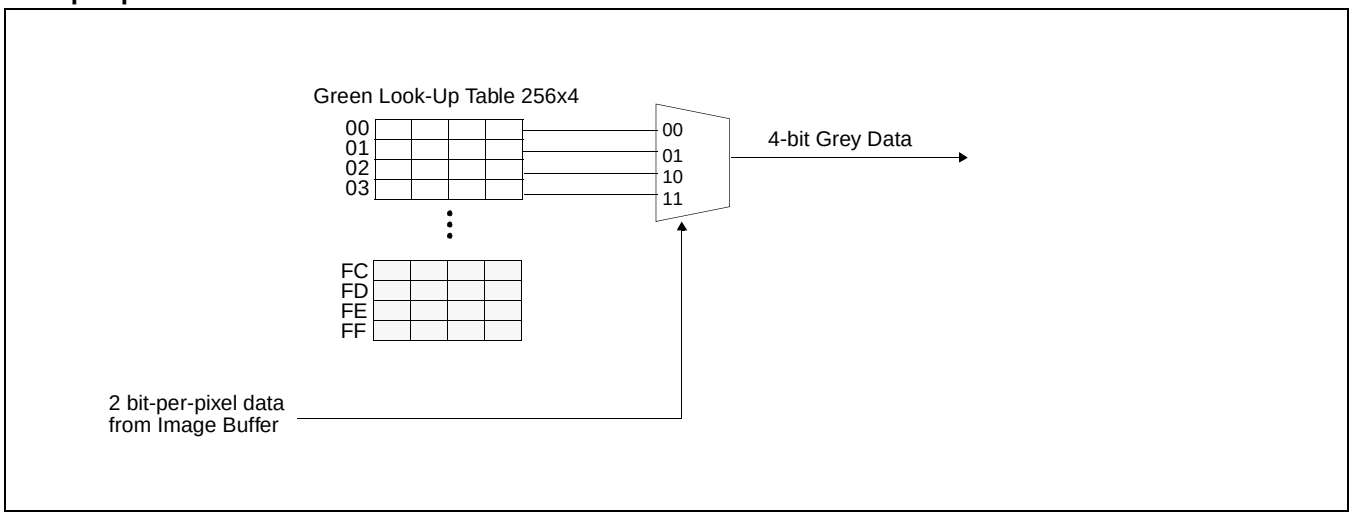

Figure 11-2: 2 Bit-per-pixel Monochrome Mode Data Output Path

4 Bit-per-pixel Monochrome Mode

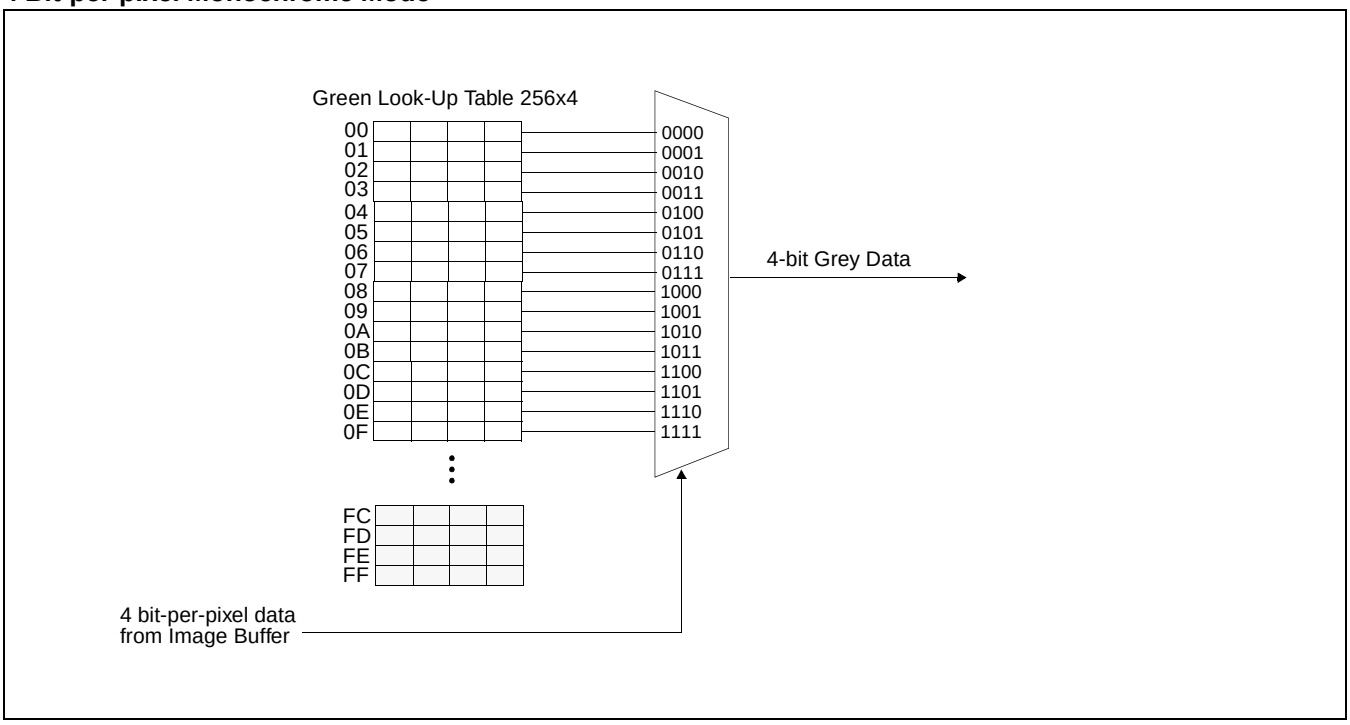

Figure 11-3: 4 Bit-per-pixel Monochrome Mode Data Output Path

11.2 Color Modes

1 Bit-per-pixel Color Mode

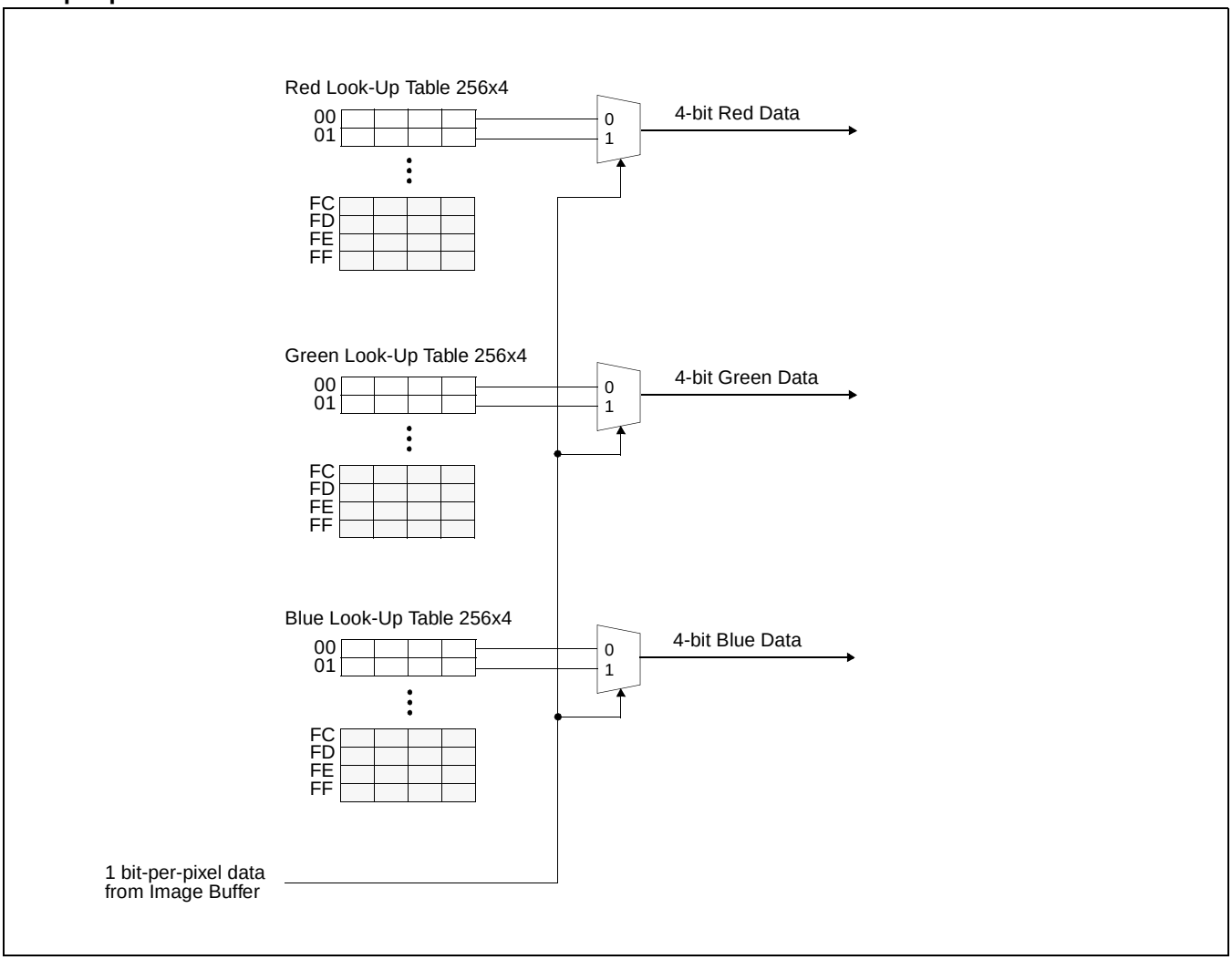

Figure 11-4: 1 Bit-per-pixel Color Mode Data Output Path

2 Bit-per-pixel Color Mode

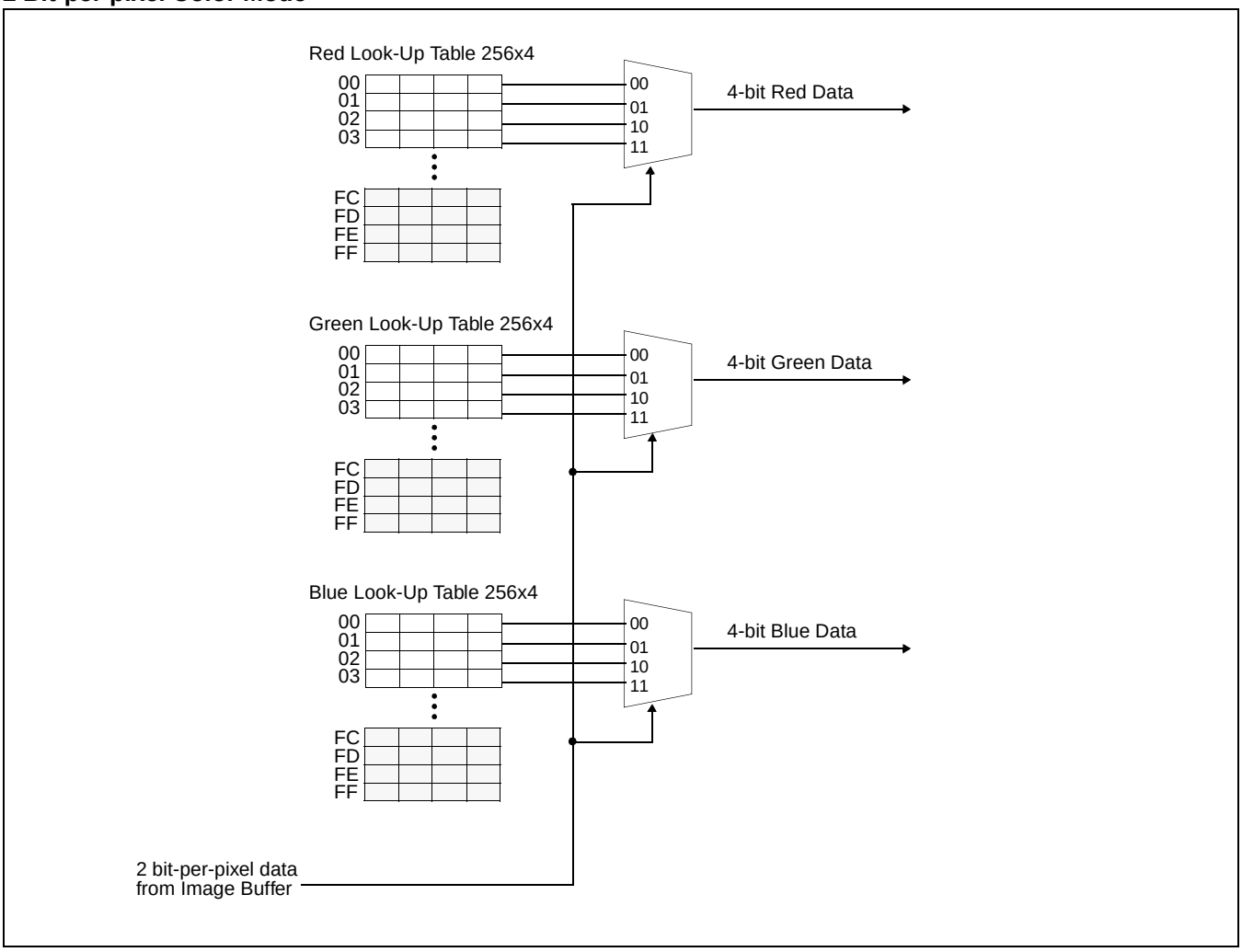

Figure 11-5: 2 Bit-per-pixel Color Mode Data Output Path

4 Bit-per-pixel Color Mode

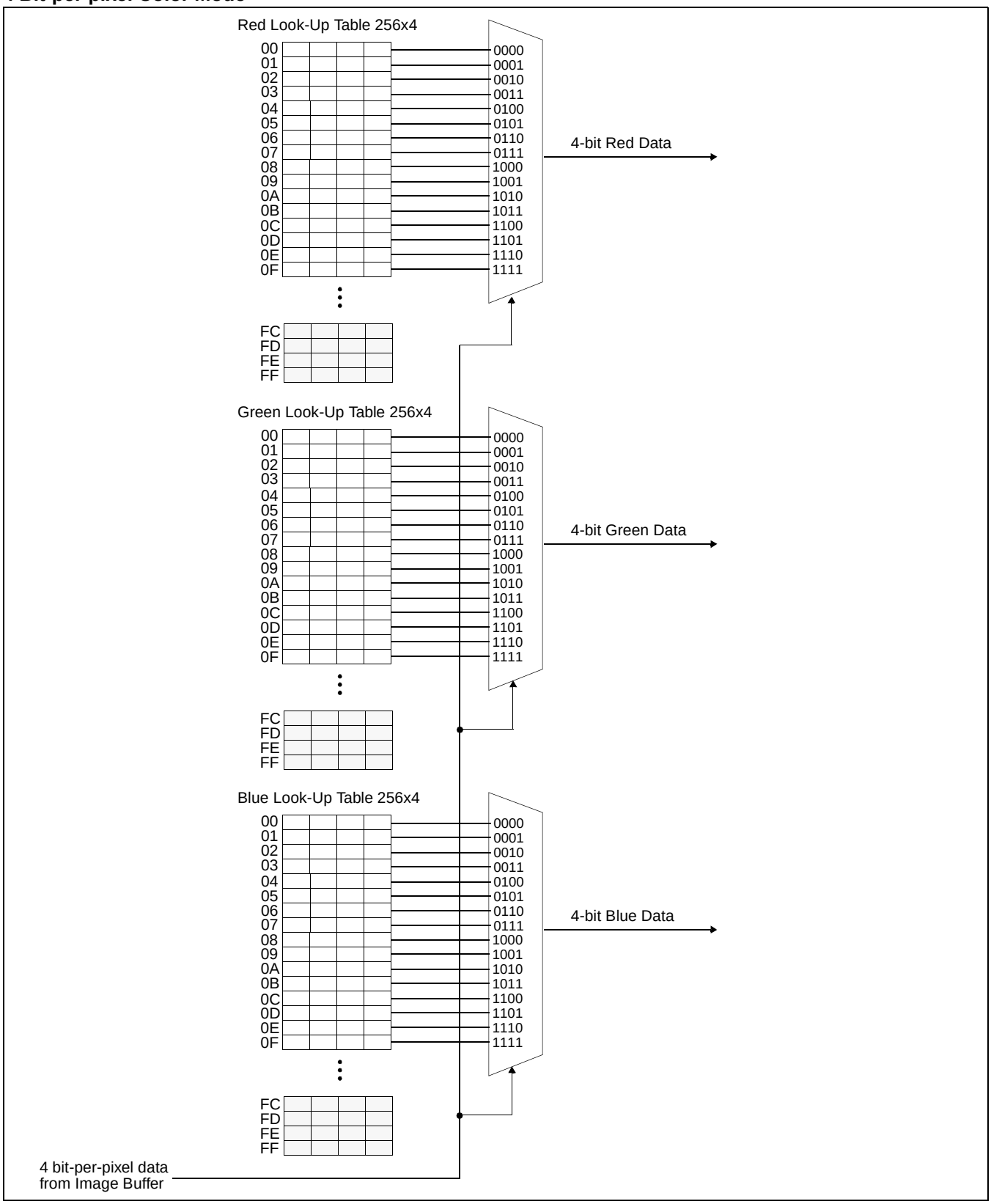

Figure 11-6: 4 Bit-per-pixel Color Mode Data Output Path

8 Bit-per-pixel Color Mode

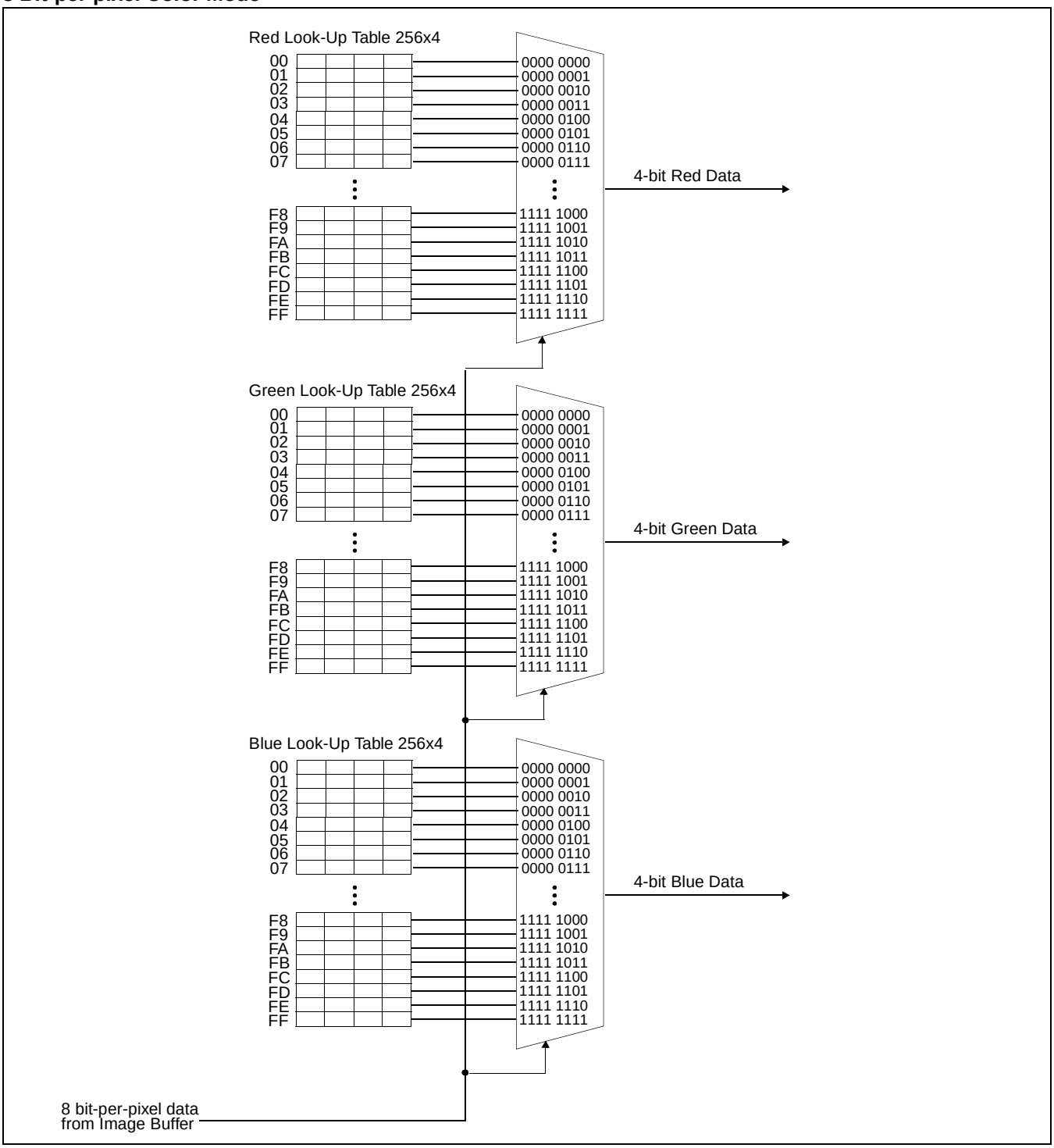

Figure 11-7: 8 Bit-per-pixel Color Mode Data Output Path

15/16 Bit-per-pixel Color Modes

The LUT is bypassed and the color data is directly mapped for this color mode – See “Display Configuration” on page 124.

12 Ink/Cursor Architecture

12.1 Ink/Cursor Buffers

The Ink/Cursor buffers contain formatted image data for the Ink Layer or Hardware Cursor. There may be several Ink/Cursor images stored in the display buffer but only one may be active at any given time.

The active Ink/Cursor buffer is selected by the Ink/Cursor Start Address register (REG[30h]). This register defines the start address for the active Ink/Cursor buffer. The Ink/Cursor buffer must be positioned where it does not conflict with the image buffer and half-frame buffer. The start address for the Ink/Cursor buffer is programmed as shown in the following table:

Table 12-1: Ink/Cursor Start Address Encoding

Ink/Cursor Start Address Bits [7:0]	Start Address (Bytes)	Comments
0	Display Buffer Size - 1024	This default value is suitable for a cursor when there is no half-frame buffer.
n = 255...1	Display Buffer Size - (n × 8192)	These positions can be used to: • position an Ink buffer at the top of the display buffer; • position an Ink buffer between the image and half-frame buffers; • position a Cursor buffer between the image and half-frame buffers; • select from a multiple of Cursor buffers.

The Ink/Cursor image is stored contiguously. The address offset from the starting word of line *n* to the starting word of line *n+1* is calculated as follows:

Ink Address Offset (words) = REG[04h] + 1
Cursor Address Offset (words) = 8

12.2 Ink/Cursor Data Format

The Ink/Cursor image is always 2 bit-per-pixel. The following diagram shows the Ink/Cursor data format for a little-endian system.

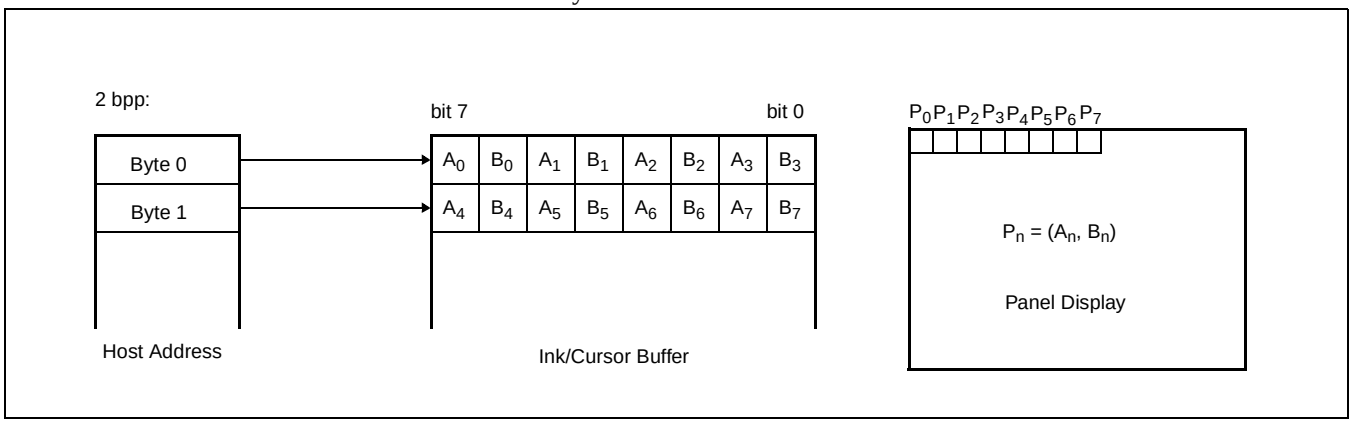

Figure 12-1: Ink/Cursor Data Format

The image data for pixel n, (A_n,B_n), selects the color for pixel n as follows:

Table 12-2: Ink/Cursor Color Select

(A_n,B_n)	Color	Comments
00	Color 0	Ink/Cursor Color 0 Register, (REG[2Dh],REG[2Ch])
01	Color 1	Ink/Cursor Color 1 Register, (REG[2Fh],REG[2Eh])
10	Background	Ink/Cursor is transparent – show background
11	Inverted Background	Ink/Cursor is transparent – show inverted background

12.3 Ink/Cursor Image Manipulation

12.3.1 Ink Image

The Ink image should always start at the top left pixel, i.e. Cursor X Position and Cursor Y Position registers should always be set to zero. The width and height of the ink image are automatically calculated to completely cover the display.

12.3.2 Cursor Image

The Cursor image size is always 64x64 pixels. The Cursor X Position and Cursor Y Position registers specify the position of the top left pixel. The following diagram shows how to position a cursor.

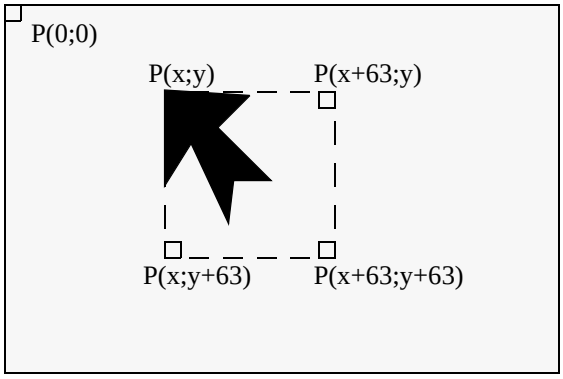

Figure 12-2: Cursor Positioning

where x = (REG[29h] bits [1:0], REG[28h]) REG[29h] bit 7 = 0
y = (REG[2Bh] bits [1:0], REG[2Ah]) REG[2Bh] bit 7 = 0

Note

There is no means to set a negative cursor position. If a cursor must be set to a negative position, this must be dealt with through software.

13 SwivelView™

13.1 Concept

Computer displays are refreshed in landscape – from left to right and top to bottom; computer images are stored in the same manner. When a display is used in SwivelView it becomes necessary to rotate the display buffer image by 90°. SwivelView rotates the image 90° clockwise as it is written to the display buffer. This rotation is done in hardware and is transparent to the programmer for all display buffer reads and writes.

SwivelView uses a 1024 × 1024 pixel virtual image. The following figures show how the programmer sees the image and how the image is actually stored in the display buffer. The display is refreshed in the following sense: C–A–D–B. The application image is written to the S1D13505 in the following sense: A–B–C–D. The S1D13505 rotates and stores the application image in the following sense: C–A–D–B, the same sense as display refresh.

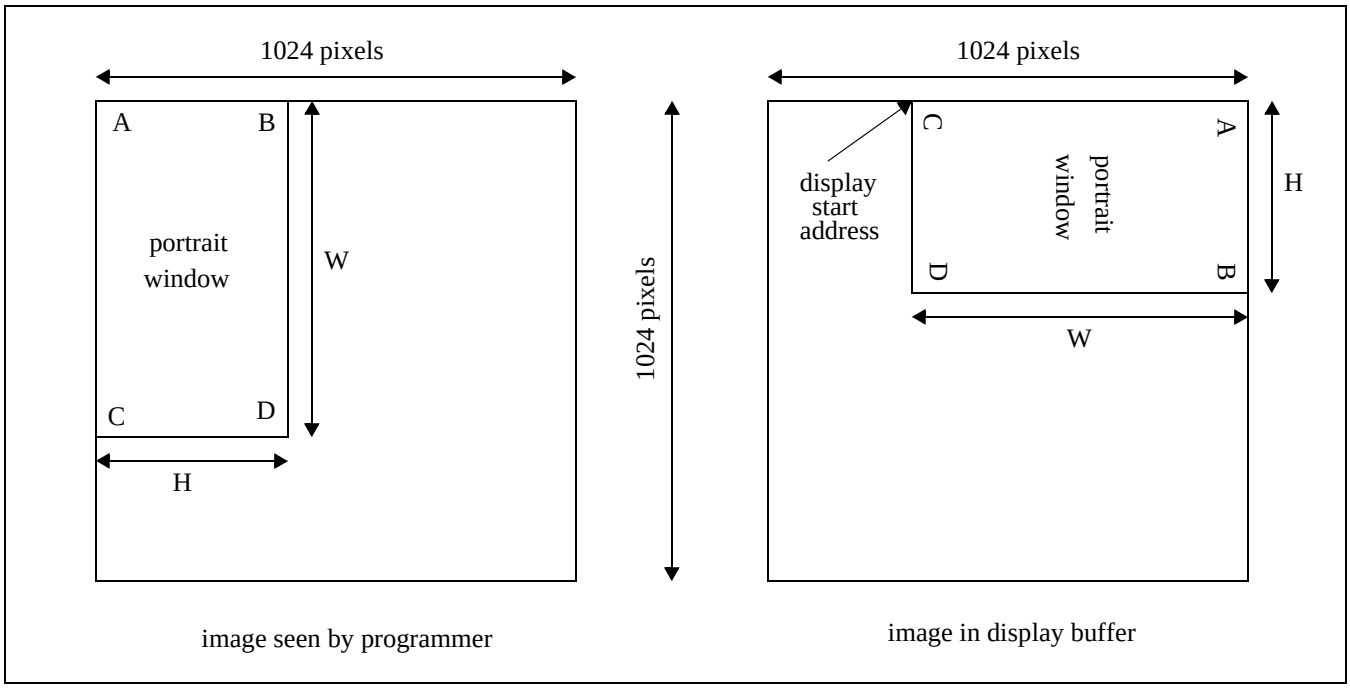

Figure 13-1: Relationship Between The Screen Image and the Image Residing in the Display Buffer

Note

The image must be written with a 1024 pixel offset between adjacent lines (e.g. 1024 bytes for 8 bpp mode or 2048 bytes for 16 bpp mode) and a display start address that is non-zero.

13.2 Image Manipulation in SwivelView

Display Start Address

It can be seen from Figure 13-1 that the top left pixel of the display is not at the top left corner of the virtual image, i.e. it is non-zero. The Display Start Address register must be set accordingly:

Display Start Address (words)	=(1024 - W)	for 16 bpp mode
	=(1024 - W) / 2	for 8 bpp mode

Memory Address Offset

The Memory Address Offset register must be set for a 1024 pixel offset:

Memory Address Offset (words)	=1024	for 16 bpp mode
	=512	for 8 bpp mode

Horizontal Panning

Horizontal panning is achieved by changing the start address. Panning of the portrait window to the right by 1 pixel is achieved by adding 1024 pixels to the Display Start Address register (or subtracting if panning to the left).

- Panning to right by 1 pixel: add current start address by 1024 (16 bpp mode) or 512 (8 bpp mode).
- Panning to left by 1 pixel: subtract current start address by 1024 (16 bpp mode) or 512 (8 bpp mode).

How far the portrait window can be panned to the right is limited not only by 1024 pixels but also by the amount of physical memory installed.

Vertical Scrolling

Vertical scrolling is achieved by changing the Display Start Address register and/or changing the Pixel Panning register.

- Increment/decrement Display Start Address register in 8 bpp mode: scroll down/up by 2 lines.
- Increment/decrement Display Start Address register in 16 bpp mode: scroll down/up by 1 line.
- Increment/decrement Pixel Panning register in 8 bpp or 16 bpp mode: scroll down/up by 1 line.

13.3 Physical Memory Requirement

Because the programmer must now deal with a virtual display, the amount of image buffer required for a particular display mode has increased. The minimum amount of image buffer required is:

Minimum Required Image Buffer (bytes)

$=(1024 \times H) \times 2$ for 16 bpp mode

$=(1024 \times H)$ for 8 bpp mode

For single panel, the required display buffer size is the same as the image buffer required. For dual panel, the display buffer required is the sum of the image buffer required and the half-frame buffer memory required. The half-frame buffer memory requirement is:

Half-Frame Buffer Memory (bytes)

$=(W \times H) / 4$ for color mode

$=(W \times H) / 16$ for monochrome mode

The half-frame buffer memory is always located at the top of the physical memory.

For simplicity the hardware cursor and ink layer memory requirement is ignored. The hardware cursor and ink layer memory must be located at 16K byte boundaries and it must not overlap the image buffer and half-frame buffer memory areas.

Even though the virtual display is 1024×1024 pixels, the actual panel window is always smaller. Thus it is possible for the display buffer size to be smaller than the virtual display but large enough to fit both the required image buffer and the half-frame buffer memory. This poses a maximum "accessible" horizontal virtual size limit.

Maximum Accessible Horizontal Virtual Size (pixels)

= (Physical Memory – Half-Frame Buffer Memory) / 2048 for 16 bpp mode

= (Physical Memory – Half-Frame Buffer Memory) / 1024 for 8 bpp mode

For example, a 640×480 single panel running 8 bpp mode requires 480K byte of image buffer and 0K byte of half-frame buffer memory. The virtual display size is 1024×1024 = 1M byte. The programmer may use a 512K byte DRAM which is smaller than the 1M byte virtual display but greater than the 480K byte minimum required image buffer. The maximum accessible horizontal virtual size is = (512K byte - 0K byte) / 1024 = 512. The programmer therefore has room to pan the portrait window to the right by 512 - 480 = 32 pixels. The programmer also should not read/write to the memory beyond the maximum accessible horizontal virtual size because that memory is either reserved for the half-frame buffer or not associated with any real memory at all.

The following table summarizes the DRAM size requirement for SwivelView using different panel sizes and display modes. Note that DRAM size for the S1D13505 is limited to either 512K byte or 2M byte. The calculation is based on the minimum required image buffer size. The calculated minimum display buffer size is based on the image buffer and the half-frame buffer only; it does not take into account the hardware cursor/ink layer and so it may or may not be sufficient to support it – this is noted in the table. The hardware cursor requires 1K byte of memory and the 2-bit ink layer requires $(W \times H) / 4$ bytes of memory; both must reside at 16K byte boundaries but only one is supported at a time. The table shows only one possible sprite/ink layer location – at the highest possible 16K byte boundary below the half-frame buffer which is always at the top.

Table 13-2 Minimum DRAM Size Required for SwivelView

<table>
<tr><th>Panel Size</th><th colspan="2">Panel Type</th><th>Display Mode</th><th>Display Buffer Size</th><th>Half-Frame Buffer Size</th><th>Minimum DRAM Size</th><th>Sprite/Ink Layer Buffer Size</th><th>Ink/Cursor Layer Location</th></tr>
<tr><td rowspan="8">320 × 240</td><td rowspan="4">Single</td><td rowspan="2">Color</td><td>8 bpp</td><td>240KB</td><td rowspan="4">0KB</td><td rowspan="8">512KB</td><td rowspan="8">1KB/18.75KB</td><td rowspan="4">496KB/ 480KB</td></tr>
<tr><td>16 bpp</td><td>480KB</td></tr>
<tr><td rowspan="2">Mono</td><td>8 bpp</td><td>240KB</td></tr>
<tr><td>16 bpp</td><td>480KB</td></tr>
<tr><td rowspan="4">Dual</td><td rowspan="2">Color</td><td>8 bpp</td><td>240KB</td><td rowspan="2">18.75KB</td><td>480KB/464KB</td></tr>
<tr><td>16 bpp</td><td>480KB</td><td>480KB/--</td></tr>
<tr><td rowspan="2">Mono</td><td>8 bpp</td><td>240KB</td><td rowspan="2">4.69KB</td><td rowspan="2">496KB/480KB</td></tr>
<tr><td>16 bpp</td><td>480KB</td></tr>
<tr><td rowspan="8">640 × 480</td><td rowspan="4">Single</td><td rowspan="2">Color</td><td>8 bpp</td><td>480KB</td><td rowspan="4">0KB</td><td rowspan="8">1KB/75KB</td><td>496KB/--</td></tr>
<tr><td>16 bpp</td><td>960KB</td><td>2MB</td><td>2032KB/1968KB</td></tr>
<tr><td rowspan="2">Mono</td><td>8 bpp</td><td>480KB</td><td>512KB</td><td>496KB/--</td></tr>
<tr><td>16 bpp</td><td>960KB</td><td rowspan="4">2MB</td><td rowspan="4">2032K/1968K</td></tr>
<tr><td rowspan="4">Dual</td><td rowspan="2">Color</td><td>8 bpp</td><td>480KB</td><td rowspan="2">75KB</td></tr>
<tr><td>16 bpp</td><td>960KB</td></tr>
<tr><td rowspan="2">Mono</td><td>8 bpp</td><td>480KB</td><td rowspan="2">18.75KB</td><td>512KB</td><td>496KB/--</td></tr>
<tr><td>16 bpp</td><td>960KB</td><td rowspan="6">2MB</td><td>2032KB/1968KB</td></tr>
<tr><td rowspan="8">800 × 600</td><td rowspan="4">Single</td><td rowspan="2">Color</td><td>8 bpp</td><td>600KB</td><td rowspan="4">0KB</td><td rowspan="6">1KB/ 117.19KB</td><td rowspan="6">2032KB/1920KB</td></tr>
<tr><td>16 bpp</td><td>1.2MB</td></tr>
<tr><td rowspan="2">Mono</td><td>8 bpp</td><td>600KB</td></tr>
<tr><td>16 bpp</td><td>1.2MB</td></tr>
<tr><td rowspan="4">Dual</td><td rowspan="2">Color</td><td>8 bpp</td><td>600KB</td><td rowspan="2">117.19KB</td></tr>
<tr><td>16 bpp</td><td>1.2MB</td></tr>
<tr><td rowspan="2">Mono</td><td>8 bpp</td><td>600KB</td><td rowspan="2">29.30KB</td></tr>
<tr><td>16 bpp</td><td>1.2MB</td></tr>
</table>

Where KB = K bytes and MB = 1024K bytes

13.4 Limitations

The following limitations apply to SwivelView:

- Only 8 bpp and 16 bpp modes are supported – 1/2/4 bpp modes are not supported.
- Hardware cursor and ink layer images are not rotated – software rotation must be used. SwivelView must be turned off when the programmer is accessing the sprite or the ink layer.
- Split screen images appear side-by-side, i.e. the portrait display is split vertically.
- Pixel panning works vertically.

14 Clocking

14.1 Maximum MCLK: PCLK Ratios

Table 14-1: Maximum PCLK Frequency with EDO-DRAM

Ink	Display type	N_{RC}	Maximum PCLK Allowed				
			1 bpp	2 bpp	4 bpp	8 bpp	16 bpp
off	• Single Panel. • CRT. • Dual Monochrome/Color Panel with Half Frame Buffer Disabled. • Simultaneous CRT + Single Panel. • Simultaneous CRT + Dual Monochrome/Color Panel with Half Frame Buffer Disabled.	5, 4, 3	MCLK				
	• Dual Monochrome Panel with Half Frame Buffer Enabled. • Simultaneous CRT + Dual Monochrome Panel with Half Frame Buffer Enable.	5	MCLK/2	MCLK/2	MCLK/2	MCLK/2	MCLK/3
		4	MCLK/2	MCLK/2	MCLK/2	MCLK/2	MCLK/3
		3	MCLK	MCLK	MCLK/2	MCLK/2	MCLK/2
	• Dual Color Panel with Half Frame Buffer Enabled. • Simultaneous CRT + Dual Color Panel with Half Frame Buffer Enable.	5	MCLK/2	MCLK/2	MCLK/2	MCLK/3	MCLK/3
		4	MCLK/2	MCLK/2	MCLK/2	MCLK/2	MCLK/3
		3	MCLK/2	MCLK/2	MCLK/2	MCLK/2	MCLK/3
on	• Single Panel. • CRT. • Dual Monochrome/Color Panel with Half Frame Buffer Disabled. • Simultaneous CRT + Single Panel. • Simultaneous CRT + Dual Monochrome/Color Panel with Half Frame Buffer Disabled.	5	MCLK/2	MCLK/2	MCLK/2	MCLK/2	MCLK/3
		4	MCLK	MCLK	MCLK/2	MCLK/2	MCLK/2
		3	MCLK	MCLK	MCLK	MCLK/2	MCLK/2
	• Dual Monochrome Panel with Half Frame Buffer Enabled. • Simultaneous CRT + Dual Monochrome Panel with Half Frame Buffer Enable.	5	MCLK/2	MCLK/3	MCLK/3	MCLK/3	MCLK/3
		4	MCLK/2	MCLK/2	MCLK/2	MCLK/3	MCLK/3
		3	MCLK/2	MCLK/2	MCLK/2	MCLK/2	MCLK/3
	• Dual Color Panel with Half Frame Buffer Enabled. • Simultaneous CRT + Dual Color Panel with Half Frame Buffer Enable.	5	MCLK/3	MCLK/3	MCLK/3	MCLK/3	MCLK/4
		4	MCLK/2	MCLK/2	MCLK/3	MCLK/3	MCLK/3
		3	MCLK/2	MCLK/2	MCLK/2	MCLK/2	MCLK/3

Table 14-2: Maximum PCLK Frequency with FPM-DRAM

Ink	Display type	N_{RC}	Maximum PCLK allowed				
			1 bpp	2 bpp	4 bpp	8 bpp	16 bpp
off	• Single Panel. • CRT. • Dual Monochrome/Color Panel with Half Frame Buffer Disabled. • Simultaneous CRT + Single Panel. • Simultaneous CRT + Dual Monochrome/Color Panel with Half Frame Buffer Disabled.	5, 4, 3	MCLK				
	• Dual Monochrome with Half Frame Buffer Enabled. • Simultaneous CRT + Dual Monochrome Panel with Half Frame Buffer Enable.	5	MCLK/2	MCLK/2	MCLK/2	MCLK/2	MCLK/3
		4	MCLK/2	MCLK/2	MCLK/2	MCLK/2	MCLK/2
		3	MCLK	MCLK	MCLK	MCLK/2	MCLK/2
	• Dual Color with Half Frame Buffer Enabled. • Simultaneous CRT + Dual Color Panel with Half Frame Buffer Enable.	5	MCLK/2	MCLK/2	MCLK/2	MCLK/2	MCLK/3
		4	MCLK/2	MCLK/2	MCLK/2	MCLK/2	MCLK/3
		3	MCLK/2	MCLK/2	MCLK/2	MCLK/2	MCLK/2
on	• Single Panel. • CRT. • Dual Monochrome/Color Panel with Half Frame Buffer Disabled. • Simultaneous CRT + Single Panel. • Simultaneous CRT + Dual Monochrome/Color Panel with Half Frame Buffer Disabled.	5	MCLK/2	MCLK/2	MCLK/2	MCLK/2	MCLK/3
		4	MCLK	MCLK	MCLK/2	MCLK/2	MCLK/2
		3	MCLK	MCLK	MCLK	MCLK/2	MCLK/2
	• Dual Monochrome with Half Frame Buffer Enabled. • Simultaneous CRT + Dual Monochrome Panel with Half Frame Buffer Enable.	5	MCLK/2	MCLK/2	MCLK/3	MCLK/3	MCLK/3
		4	MCLK/2	MCLK/2	MCLK/2	MCLK/2	MCLK/3
		3	MCLK/2	MCLK/2	MCLK/2	MCLK/2	MCLK/3
	• Dual Color with Half Frame Buffer Enabled. • Simultaneous CRT + Dual Color Panel with Half Frame Buffer Enable.	5	MCLK/3	MCLK/3	MCLK/3	MCLK/3	MCLK/4
		4	MCLK/2	MCLK/2	MCLK/2	MCLK/3	MCLK/3
		3	MCLK/2	MCLK/2	MCLK/2	MCLK/2	MCLK/3

14.2 Frame Rate Calculation

The frame rate is calculated using the following formula:

$$\text{FrameRate} = \frac{\text{PCLK}_{max}}{(\text{HDP} + \text{HNDP}) \times (\text{VDP} + \text{VNDP})}$$

Where:

VDP	= Vertical Display Period	= REG[09h] bits [1:0], REG[08h] bits [7:0] + 1
VNDP	= Vertical Non-Display Period	= REG[0Ah] bits [5:0] + 1
		= in table below
HDP	= Horizontal Display Period	= ((REG[04h] bits [6:0]) + 1) * 8Ts
HNDP	= Horizontal Non-Display Period	= ((REG[05h] bits [4:0]) + 1) * 8Ts
		= given in table below
Ts	= Pixel Clock	= PCLK

Table 14-3: Example Frame Rates with Ink Disabled

DRAM Type[1] (Speed Grade)	Display	Resolution	Color Depth (bpp)	Maximum Pixel Clock (MHz)	Minimum Panel HNDP(T_S)	Maximum Frame Rate (Hz)	
						Panel[4]	CRT
50ns EDO-DRAM MClk = 40MHz N_{RC} = 4 N_{RP} = 1.5 N_{RCD} = 2	• Single Panel. • CRT. • Dual Monochrome/Color Panel with Half Frame Buffer Disabled.[5] • Simultaneous CRT + Single Panel. • Simultaneous CRT + Dual Monochrome/Color Panel with Half Frame Buffer Disabled.[5]	800x600[2]	1/2/4/8	40	32	80	60
			15/16[6]		56	78	60
		640x480	1/2/4/8		32	123	85
			15/16		56	119	85
		640x240	1/2/4/8		32	247	-
			15/16		56	242	-
		480x320	1/2/4/8		32	243	-
			15/16		56	232	-
		320x240	1/2/4/8		32	471	-
			15/16		56	441	-
	• Dual Color with Half Frame Buffer Enabled. • Dual Mono with Half Frame Buffer Enabled.	800x600[2,3]	1/2/4/8	20	32	80	-
			15/16[6]	13.3	32	53	-
		640x480	1/2/4/8	20	32	123	-
			15/16	13.3	32	82	-

Table 14-3: Example Frame Rates with Ink Disabled (Continued)

DRAM Type[1] (Speed Grade)	Display	Resolution	Color Depth (bpp)	Maximum Pixel Clock (MHz)	Minimum Panel HNDP(T_S)	Maximum Frame Rate (Hz)	
						Panel[4]	CRT
60ns EDO-DRAM MClk = 33MHz N_{RC} = 4 N_{RP} = 1.5 N_{RCD} = 2	• Single Panel. • CRT. • Dual Mono/Color Panel with Half Frame Buffer Disabled.[5] • Simultaneous CRT + Single Panel. • Simultaneous CRT + Dual Mono/Color Panel with Half Frame Buffer Disabled.[5]	800x600[2]	1/2/4/8	33	32	66	55
			15/16[6]		56	65	55
		640x480	1/2/4/8		32	101	78
			15/16		56	98	78
		640x240	1/2/4/8		32	203	-
			15/16		56	200	-
		480x320	1/2/4/8		32	200	-
			15/16		56	196	-
		320x240	1/2/4/8		32	388	-
			15/16		56	380	-
	• Dual Color with Half Frame Buffer Enabled. • Dual Mono with Half Frame Buffer Enabled.	800x600[2,3]	1/2/4/8	16.5	32	66	-
			15/16[6]	11	32	43	-
		640x480	1/2/4/8	16.5	32	103	-
			15/16	11	32	68	-
60ns FPM-DRAM MClk = 25MHz N_{RC} = 4 N_{RP} = 1.5 N_{RCD} = 2	• Single Panel. • CRT. • Dual Mono/Color Panel with Half Frame Buffer Disabled.[5] • Simultaneous CRT + Single Panel. • Simultaneous CRT + Dual Mono/Color Panel with Half Frame Buffer Disabled.[5]	800x600[2]	1/2/4/8	25	32	50	-
			15/16[6]		56	48	-
		640x480	1/2/4/8		32	77	60
			15/16		56	75	60
		640x240	1/2/4/8		32	142	-
			15/16		56	136	-
		480x320	1/2/4/8		32	152	-
			15/16		56	145	-
		320x240	1/2/4/8		32	294	-
			15/16		56	280	-
	• Dual Mono with Half Frame Buffer Enabled.	800x600[2]	1/2/4/8/15/16[6]	12.5	32	50	-
		640x480	1/2/4/8/15/16	12.5	32	77	-
		640x400	1/2/4/8/15/16	12.5	32	92	-
	• Dual Color with Half Frame Buffer Enabled.	800x600[2,3]	1/2/4/8	12.5	32	50	-
			15/16[6]	8.33	32	33	-
		640x480	1/2/4/8	12.5	32	77	-
			15/16	8.33	32	51	-

1. Must set N_{RC} = 4MCLK. See REG[22h], Performance Enhancement Register.
2. 800x600 @ 16 bpp requires 2M bytes of display buffer for all display types.
3. 800x600 @ 8 bpp on a dual color panel requires 2M bytes of display buffer if the half frame buffer is enabled.

4. Optimum frame rates for panels range from 60Hz to 150Hz. If the maximum refresh rate is too high for a panel, MCLK should be reduced or PCLK should be divided down.
5. Half Frame Buffer disabled by REG[1Bh] bit 0.
6. When setting a horizontal resolution greater than 767 pixels, with a color depth of 15/16 bpp, the Memory Offset Registers (REG[16h], REG[17h]) must be set to a virtual horizontal pixel resolution of 1024.

14.3 Bandwidth Calculation

When calculating the average bandwidth, there are two periods that must be calculated separately.

The first period is the time when the CPU is in competition with the display refresh fetches. The CPU can only access the memory when the display refresh releases the memory controller. The CPU bandwidth during this period is called the “bandwidth during display period”.

The second period is the time when the CPU has full access to the memory, with no competition from the display refresh. The CPU bandwidth during this period is called the “bandwidth during non display period.”

To calculate the average bandwidth, calculate the percentage of time between display period and non display period. The percentage of display period is multiplied with the bandwidth during display period. The percentage of non display period is multiplied with the bandwidth during non display period. The two products are summed to provide the average bandwidth.

Bandwidth during non display period

Based on simulation, it requires a minimum of 12 MCLKs to service one, two byte, CPU access to memory. This includes all the internal handshaking and assumes that N_{RC} is set to 4MCLKs and the wait state bits are set to 10b.

Bandwidth during non display period = f(MCLK) / 6 Mb/s

Bandwidth during display period

The amount of time taken up by display refresh fetches is a function of the color depth, and the display type. Below is a table of the number of MCLKs required for various memory fetches to display 16 pixels. Assuming N_{RC} = 4MCLKs.

Table 14-4: Number of MCLKs required for various memory access

Memory access	Number of MCLKs
Half Frame Buffer, monochrome	7
Half Frame Buffer, color	11
Display @ 1 bpp	4
Display @ 2 bpp	5
Display @ 4 bpp	7
Display @ 8 bpp	11
Display @ 16 bpp	19
CPU	4

Table 14-5: Total # MCLKs taken for Display refresh

Display	MCLKs for Display Refresh				
	1 bpp	2 bpp	4 bpp	8 bpp	16 bpp
• Single Panel. • CRT. • Dual Monochrome/Color Panel with Half Frame Buffer Disabled. • Simultaneous CRT + Single Panel. • Simultaneous CRT + Dual Monochrome/Color Panel with Half Frame Buffer Disabled.	4	5	7	11	19
• Dual Monochrome Panel with Half Frame Buffer Enabled. • Simultaneous CRT + Dual Monochrome Panel with Half Frame Buffer Enable.	11	12	14	18	26
• Dual Color Panel with Half Frame Buffer Enabled.	15	16	18	22	30

Bandwidth during display period = MIN (bandwidth during non display period, B/C/D)
where B = number of MCLKs left available for CPU access after every 16 pixels drawn
= (f(MCLK)/f(PCLK) * 16 - Total MCLK for Display refresh), units in MCLKs 16 pixels
where C = number of MCLKs required to service 1 CPU access (2 bytes of data)
= 4, units in MCLKs/2 bytes
where D = time to draw 16 pixels
= 16 / f(PCLK), units in 16 pixels

The minimum function limits the bandwidth to the bandwidth available during non display period should the display fetches constitute a small percentage of the overall memory activity.

For 16 bpp single panel/CRT/dual panel with half frame buffer disable, the number of MCLKs required to fetch 16 pixels when PCLK = MCLK exceeds 16. In this case, the display fetch does not allow any CPU access during the display period. CPU access can only be achieved during non display periods.

Average Bandwidth

All displays have a horizontal non display period, and a vertical non display period. The formula for calculating the percentage of non display period is as follows

Percentage of non display period = (HTOT * VTOT - WIDTH * HEIGHT)/(HTOT * VTOT)

Percentage of non display period for CRT = (800*525 - 640*480)/(800*525) = 26.6%

Percentage of non display period for single panel = (680*482 - 640*480)/680*482) = 6.2%

Percentage of non display period for dual panel = (680*242 - 640*240)/680*242) = 6.6%

Average Bandwidth =
Percentage of non display period * Bandwidth during non display period +
(1- Percentage of non display period) * Bandwidth during display period

Table 14-6: Theoretical Maximum Bandwidth M byte/sec, Cursor/Ink disabled

DRAM Type[1] (Speed Grade)	640x480 Display	Max. Pixel Clock (MHz)	Maximum Bandwidth (M byte/sec)				
			1 bpp	2 bpp	4 bpp	8 bpp	16 bpp
50ns EDO-DRAM MCLK = 40MHz	• CRT. • Simultaneous CRT + Single Panel. • Simultaneous CRT + Dual Monochrome/Color Panel with Half Frame Buffer Disabled.	40	6.67	6.67	6.67	6.36	1.79
	• Single Panel.	40	6.67	6.67	6.60	6.27	0.41
	• Dual Monochrome/Color Panel with Half Frame Buffer Disabled.	20	6.67	6.67	6.67	6.67	6.67
	• Dual Monochrome Panel with Half Frame Buffer Enabled.	40	6.27	5.11	-	-	-
		20	6.67	6.67	6.67	6.67	3.94
		13.3	6.67	6.67	6.67	6.67	6.67
	• Simultaneous CRT + Dual Mono Panel with Half Frame Buffer Enable.	40	6.36	5.44	-	-	-
	• Dual Color Panel with Half Frame Buffer Enabled.	20	6.67	6.67	6.27	6.27	-
		13.3	6.67	6.67	6.67	6.67	6.67
60ns EDO-DRAM MCLK = 33MHz	• CRT. • Simultaneous CRT + Single Panel. • Simultaneous CRT + Dual Monochrome/Color Panel with Half Frame Buffer Disabled.	33	5.5	5.5	5.5	5.24	1.47
	• Single Panel.	33	5.5	5.5	5.5	5.17	0.34
	• Dual Monochrome/Color Panel with Half Frame Buffer Disabled.	16.5	5.5	5.5	5.5	5.5	5.5
	• Dual Monochrome Panel with Half Frame Buffer Enabled.	33	5.17	4.21	-	-	-
		16.5	5.5	5.5	5.5	5.5	3.25
		11	5.5	5.5	5.5	5.5	5.5
	• Simultaneous CRT + Dual Monochrome Panel with Half Frame Buffer Enable.	33	5.24	4.49	-	-	-
	• Dual Color Panel with Half Frame Buffer Enabled.	16.5	5.5	5.5	5.5	5.17	-
		11	5.5	5.5	5.5	5.5	5.5

Table 14-6: Theoretical Maximum Bandwidth M byte/sec, Cursor/Ink disabled (Continued)

DRAM Type[1] (Speed Grade)	640x480 Display	Max. Pixel Clock (MHz)	Maximum Bandwidth (M byte/sec)				
			1 bpp	2 bpp	4 bpp	8 bpp	16 bpp
60ns FPM-DRAM MCLK = 25MHz	• CRT. • Simultaneous CRT + Single Panel. • Simultaneous CRT + Dual Monochrome/Color Panel with Half Frame Buffer Disabled.	25	4.16	4.16	4.16	3.97	1.11
	• Single Panel. • Dual Monochrome/Color Panel with Half Frame Buffer Disabled.	25	4.16	4.16	4.16	3.92	0.26
		12.5	4.16	4.16	4.16	4.16	4.16
	• Dual Monochrome with Half Frame Buffer Enabled.	25	3.92	3.19	-	-	-
		12.5	4.16	4.16	4.16	4.16	2.46
		8.3	4.16	4.16	4.16	4.16	4.16
	• Simultaneous CRT + Dual Monochrome Panel with Half Frame Buffer Enable.	25	3.97	3.40	-	-	-
	• Dual Color Panel with Half Frame Buffer Enabled.	12.5	4.16	4.16	4.16	3.92	-
		8.33	4.16	4.16	4.16	4.16	4.16

15 Power Save Modes

Three power save modes are incorporated into the S1D13505 to meet the important need for power reduction in the hand-held device market.

Table 15-1: Power Save Mode Function Summary

Function	Power Save Mode (PSM)			
	Normal (Active)	**No Display LCDEnable = 0 CRTEnable = 0**	**Software Suspend**	**Hardware Suspend**
Display Active?	Yes	No	No	No
Register Access Possible?	Yes	Yes	Yes	No
Memory Access Possible?	Yes	Yes	No	No
LUT Access Possible?	Yes	Yes	Yes	No

Table 15-2: Pin States in Power-save Modes

Pins	Pin State			
	Normal (Active)	**No Display LCDEnable = 0 CRTEnable = 0**	**Software Suspend**	**Hardware Suspend**
LCD outputs	Active (LCDEnable = 1)	Forced Low[2]	Forced Low[2]	Forced Low[2]
LCDPWR	On (LCDEnable = 1)	Off	Off	Off
DRAM outputs	Active	CBR Refresh only	Refresh Only[1]	Refresh Only[1]
CRT/DAC outputs	Active (CRTEnable = 1)	Disabled	Disabled	Disabled
Host Interface outputs	Active	Active	Active	Disabled

1. Refresh method is selectable by REG[1Ah]. Supported methods are CBR refresh, self-refresh or no refresh at all.

2. The FPFRAME and FPLINE signals are set to their inactive states during power-down. The inactive states are determined by REG[07h] bit 6 and REG[0Ch] bit 6. A problem may occur if the inactive state is high (typical TFT/D-TFD configuration) and power is removed from the LCD panel.

   For software suspend the problem can be solved in the following manner. At power-down, first enable software suspend, then wait ~120 VNDP, and lastly reverse the polarity bits. At power-up, first disable software suspend, then revert the polarity bits back to the configuration state.

   For hardware suspend an external hardware solution would be to use an AND gate on the sync signal. One input of the AND gate is connected to a sync signal, the other input would be tied to the panel's logic power supply. When the panel's logic power supply is removed, the sync signal is forced low.

16 Mechanical Data

128-pin QFP15 surface mount package

Unit: mm

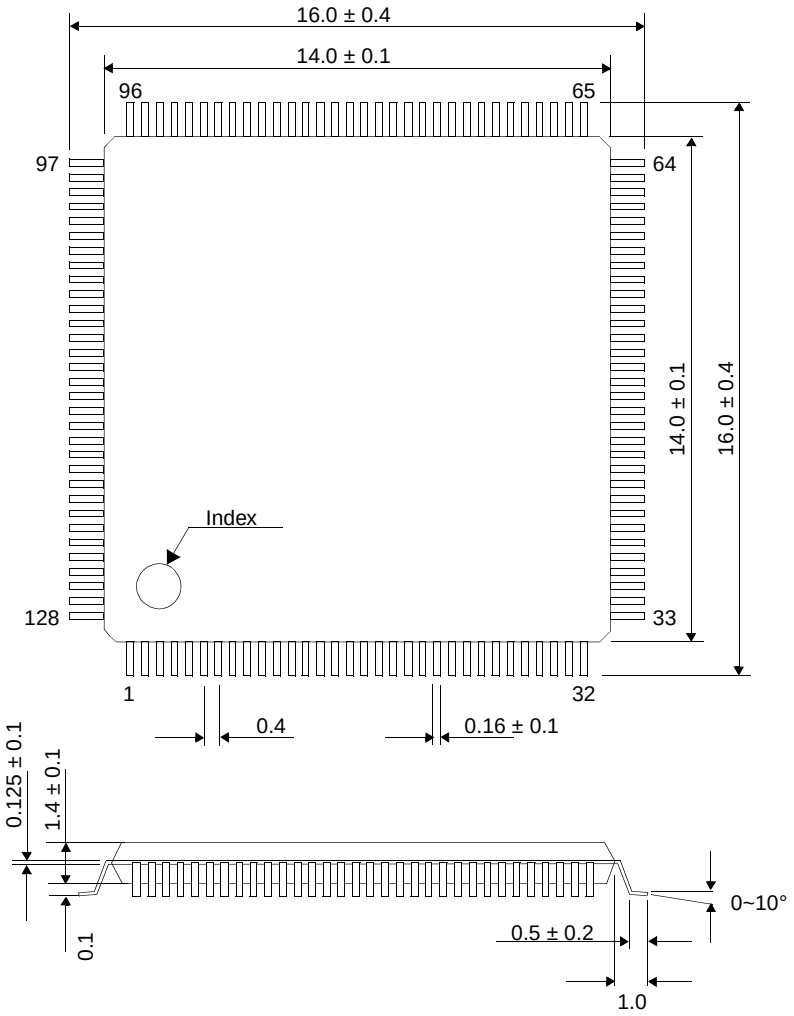

Figure 16-1: Mechanical Drawing QFP15

EPSON®

S1D13505 Embedded RAMDAC LCD/CRT Controller

Programming Notes and Examples

Document Number: X23A-G-003-07

Copyright © 1998, 2001 Epson Research and Development, Inc. All Rights Reserved.

Information in this document is subject to change without notice. You may download and use this document, but only for your own use in evaluating Seiko Epson/EPSON products. You may not modify the document. Epson Research and Development, Inc. disclaims any representation that the contents of this document are accurate or current. The Programs/Technologies described in this document may contain material protected under U.S. and/or International Patent laws.

EPSON is a registered trademark of Seiko Epson Corporation. All other trademarks are the property of their respective owners.

THIS PAGE LEFT BLANK

Table of Contents

1 Introduction 11
2 Initialization 12
2.1 Miscellaneous 15
3 Memory Models 16
3.1 Display Buffer Location 16
3.1.1 Memory Organization for One Bit-Per-Pixel (2 Colors/Gray Shades) 16
3.1.2 Memory Organization for Two Bit-Per-Pixel (4 Colors/Gray Shades) 17
3.1.3 Memory Organization for Four Bit-Per-Pixel (16 Colors/Gray Shades) 17
3.1.4 Memory Organization for Eight Bit-Per-Pixel (256 Colors/16 Gray Shades) 18
3.1.5 Memory Organization for Fifteen Bit-Per-Pixel (32768 Colors/16 Gray Shades) . . 18
3.1.6 Memory Organization for Sixteen Bit-Per-Pixel (65536 Colors/16 Gray Shades) . . 19
4 Look-Up Table (LUT) 20
4.1 Look-Up Table Registers 20
4.2 Look-Up Table Organization 21
5 Advanced Techniques 29
5.1 Virtual Display 29
5.1.1 Registers 30
5.1.2 Examples 31
5.2 Panning and Scrolling 31
5.2.1 Registers 32
5.2.2 Examples 33
5.3 Split Screen 35
5.3.1 Registers 35
5.3.2 Examples 37
6 LCD Power Sequencing and Power Save Modes 38
6.1 LCD Power Sequencing 38
6.1.1 Registers 38
6.1.2 LCD Power Disable 39
6.2 Software Power Save 40
6.2.1 Registers 41
6.3 Hardware Power Save 42
7 Hardware Cursor/Ink Layer 43
7.1 Introduction 43
7.2 Registers 44
7.3 Limitations 46
7.3.1 Updating Hardware Cursor Addresses 46

7.3.2 Reg[29h] And Reg[2Bh] 46
7.3.3 Reg [30h] 46
7.3.4 No Top/Left Clipping on Hardware Cursor 46
7.4 Examples 46
8 SwivelView 47
8.1 Introduction To SwivelView 47
8.2 S1D13505 SwivelView 47
8.3 Registers 47
8.4 Limitations 48
8.5 Examples 49
9 CRT Considerations 51
9.1 Introduction 51
9.1.1 CRT Only 51
9.1.2 Simultaneous Display 51
10 Identifying the S1D13505 52
11 Hardware Abstraction Layer (HAL) 53
11.1 Introduction 53
11.2 Contents of the HAL_STRUCT 53
11.3 Using the HAL library 54
11.4 API for 13505HAL 54
11.5 Initialization 56
11.5.1 General HAL Support 58
11.5.2 Advanced HAL Functions 62
11.5.3 Register / Memory Access 64
11.5.4 Color Manipulation 67
11.5.5 Drawing 69
11.5.6 Hardware Cursor 71
11.5.7 Ink Layer 75
11.5.8 Power Save 78
11.6 Porting LIBSE to a new target platform 78
11.6.1 Building the LIBSE library for SH3 target example 79
11.6.2 Building the HAL library for the target example 80
11.6.3 Building a complete application for the target example 80

12 Sample Code 84
12.1 Introduction 84
12.1.1 Sample code using the S1D13505 HAL API 84
12.1.2 Sample code without using the S1D13505 HAL API 86
12.1.3 Header Files 95
Appendix A Supported Panel Values 107
A.1 Supported Panel Values 107

List of Tables

Table 2-1: S1D13505 Initialization Sequence 12
Table 4-1: Look-Up Table Configurations 21
Table 4-2: Recommended LUT Values for 1 Bpp Color Mode 22
Table 4-3: Example LUT Values for 2 Bpp Color Mode 22
Table 4-4: Suggested LUT Values to Simulate VGA Default 16 Color Palette 23
Table 4-5: Suggested LUT Values to Simulate VGA Default 256 Color Palette 24
Table 4-6: Recommended LUT Values for 1 Bpp Gray Shade 26
Table 4-7: Suggested Values for 2 Bpp Gray Shade 26
Table 4-8: Suggested LUT Values for 4 Bpp Gray Shade 27
Table 5-1: Number of Pixels Panned Using Start Address 33
Table 5-2: Active Pixel Pan Bits 33
Table 6-1: Suspend Refresh Selection 41
Table 7-1: Ink/Cursor Mode 44
Table 7-2: Cursor/Ink Start Address Encoding 46
Table 11-1: HAL Functions 54
Table 12-1: Passive Single Panel @ 320x240 with 40MHz Pixel Clock 107
Table 12-2: Passive Single Panel @ 640x480 with 40MHz Pixel Clock 107
Table 12-3: Passive Dual Panel @ 640x480 with 40MHz Pixel Clock 108
Table 12-4: TFT Single Panel @ 640x480 with 25.175 MHz Pixel Clock 108

THIS PAGE LEFT BLANK

List of Figures

Figure 3-1: Pixel Storage for 1 Bpp (2 Colors/Gray Shades) in One Byte of Display Buffer 16
Figure 3-2: Pixel Storage for 2 Bpp (4 Colors/Gray Shades) in One Byte of Display Buffer 17
Figure 3-3: Pixel Storage for 4 Bpp (16 Colors/Gray Shades) in One Byte of Display Buffer 17
Figure 3-4: Pixel Storage for 8 Bpp (256 Colors/16 Gray Shades) in One Byte of Display Buffer . . 18
Figure 3-5: Pixel Storage for 15 Bpp (32768 Colors/16 Gray Shades) in Two Bytes of Display Buffer 18
Figure 3-6: Pixel Storage for 16 Bpp (65536 Colors/16 Gray Shades) in Two Bytes of Display Buffer 19
Figure 5-1: Viewport Inside a Virtual Display 30
Figure 5-2: Memory Address Offset Registers 30
Figure 5-3: Screen 1 Start Address Registers 32
Figure 5-4: Pixel Panning Register 33
Figure 5-5: 320x240 Single Panel For Split Screen 35
Figure 5-6: Screen 1 Line Compare 35
Figure 5-7: Screen 2 Display Start Address 36
Figure 11-1: Components needed to build 13505 HAL application 78

THIS PAGE LEFT BLANK

1 Introduction

This guide describes how to program the S1D13505 Embedded RAMDAC LCD/CRT Controller. The guide presents the basic concepts of the LCD/CRT controller and provides methods to directly program the registers. It explains some of the advanced techniques used and the special features of the S1D13505.

The guide also introduces the Hardware Abstraction Layer (HAL), which is designed to simplify the programming of the S1D13505. Most S1D1350x and S1D1370x products support the HAL allowing OEMs to switch chips with relative ease.

This document is updated as appropriate. Please check the Epson Electronics America Website at http://www.eea.epson.com for the latest revision of this document before beginning any development.

We appreciate your comments on our documentation. Please contact us via email at documentation@erd.epson.com.

2 Initialization

This section describes how to initialize the S1D13505. Sample code for performing initialization of the S1D13505 is provided in the file **init13505.c** which is available on the internet at http://www.eea.epson.com.

S1D13505 initialization can be broken into three steps. First, enable the S1D13505 controller (if necessary identify the specific controller). Next, set all the registers to their initial values. Finally, program the Look-Up Table (LUT) with color values. This section does not deal with programming the LUT, see Section 4 of this manual for LUT programming details.

Note

When using an ISA evaluation board in a PC (i.e. S5U13505B00C), there are two additional steps that must be carried out before initialization. First, confirm that 16-bit mode is enabled by writing to address F80000h. Then, if hardware suspend is enabled, disable suspend mode by writing to F00000h. For further information on ISA evaluation boards refer to the *S5U13505B00C Rev. 1.0 ISA Bus Evaluation Board User Manual*, document number X23A-G-004-xx.

The following table represents the sequence and values written to the S1D13505 registers to control a configuration with these specifications:

- 640x480 color dual passive format 1 LCD @ 75Hz.
- 8-bit data interface.
- 8 bit-per-pixel (bpp) - 256 colors.
- 31.5 MHz input clock.
- 50 ns EDO-DRAM, 2 CAS, 4 ms refresh, CAS before RAS.

Table 2-1: S1D13505 Initialization Sequence

Register	Value	Notes	See Also
[1B]	0000 0000	Enable the host interface	
[23]	1000 0000	Disable the FIFO	
[01]	0011 0000	Memory configuration - divide ClkI by 512 to get 4 ms for 256 refresh cycles - this is 2-CAS# EDO memory	
[22]	0100 1000	Performance Enhancement 0 - refer to the hardware specification for a complete description of these bits	S1D13505 Hardware Functional Specification, document number X23A-A-001-xx
[02]	0001 0110	Panel type - non-EL, 8-bit data, format 1, color, dual, passive	
[03]	0000 0000	Mod rate used by older monochrome panels - set to 0	
[04]	0100 1111	Horizontal display size = (Reg[04]+1)*8 = (79+1)*8 = 640 pixels	see note for REG[16h] and REG[17h]
[05]	0000 0011	Horizontal non-display size = (Reg[05]+1)*8 = (3+1)*8 = 32 pixels	

Table 2-1: S1D13505 Initialization Sequence (Continued)

Register	Value	Notes	See Also
[06]	0000 0000	FPLINE start position - only required for CRT or TFT/D-TFD	
[07]	0000 0000	FPLINE polarity set to active high	
[08]	1110 1111	Vertical display size = Reg[09][08] + 1 = 0000 0000 1110 1111 + 1 = 239+1 = 240 lines (total height/2 for dual panels)	
[09]	0000 0000		
[0A]	0011 1000	Vertical non-display size = Reg[0A] + 1 = 57 + 1 = 58 lines	
[0B]	0000 0000	FPFRAME start position - only required for CRT or TFT/D-TFD	
[0C]	0000 0000	FPFRAME polarity set to active high	
[0D]	0000 1100	Display mode - hardware portrait mode disabled, 8 bpp and LCD disabled, enable LCD in last step of this example.	
[0E]	1111 1111	Line compare (Regs[0Eh] and[0Fh] set to maximum allowable value. We can change this later if we want a split screen.	‘
[0F]	0000 0011		
[10]	0000 0000	Screen 1 Start Address (Regs [10h], [11h], and [12h]) set to 0. This will start the display in the first byte of the display buffer.	
[11]	0000 0000		
[12]	0000 0000		
[13]	0000 0000	Screen 2 Start Address (Regs [13h], [14h], and [15h]) to offset 0. Screen 2 Start Address in not used at this time.	
[14]	0000 0000		
[15]	0000 0000		
[16]	0100 0000	Memory Address Offset (Regs [17h] [16h]) - 640 pixels = 640 bytes = 320 words = 140h words **Note: When setting a horizontal resolution greater than 767 pixels, with a color depth of 15/16 bpp, the Memory Offset Registers (REG[16h], REG[17h]) must be set to a virtual horizontal pixel resolution of 1024.**	
[17]	0000 0001		
[18]	0000 0000	Set pixel panning for both screens to 0	
[19]	0000 0001	Clock Configuration - set PClk to MClk/2 - the specification says that for a dual color panel the maximum PClk is MClk/2	
[1A]	0000 0000	Enable LCD Power	
[1C]	0000 0000	MD Configuration Readback - we write a 0 here to keep the register configuration logic simpler	
[1D]	0000 0000		
[1E]	0000 0000	General I/O Pins - set to zero.	
[1F]	0000 0000		
[20]	0000 0000	General I/O Pins Control - set to zero.	
[21]	0000 0000		

Table 2-1: S1D13505 Initialization Sequence (Continued)

Register	Value	Notes	See Also
[24]	0000 0000	The remaining register control operation of the LUT and hardware cursor/ink layer. During the chip initialization none of these registers needs to be set. It is safe to write them to zero as this is the power-up value for the registers.	
[26]	0000 0000		
[27]	0000 0000		
[28]	0000 0000		
[29]	0000 0000		
[2A]	0000 0000		
[2B]	0000 0000		
[2C]	0000 0000		
[2D]	0000 0000		
[2E]	0000 0000		
[2F]	0000 0000		
[30]	0000 0000		
[31]	0000 0000		
[23]	0000 0000	Enable FIFO, mask in appropriate FIFO threshold bits	S1D13505 Hardware Functional Specification, document number X23A-A-001-xx
[0D]	0000 1101	Display mode - hardware portrait mode disabled, 8 bpp and LCD enabled	

2.1 Miscellaneous

This section of the notes contains recommendations which can be set at initialization time to improve display image quality.

At high color depths the display FIFO introduces two conditions which must be accounted for in software. Simultaneous display while using a dual passive panel introduces another possible register change.

Display FIFO Threshold

At 15/16 bit-per-pixel the display FIFO threshold (bits 0-4 of register [23h]) must be programmed to a value other than '0'. Product testing has shown that at these color depths a better quality image results when the display FIFO threshold is set to a value of 1Bh.

Memory Address Offset

When an 800x600 display mode is selected at 15 or 16 bpp, memory page breaks can disrupt the display buffer fetches. This disruption produces a visible flicker on the display. To avoid this set the Memory Address Offset (Reg [16h] and Reg [17h]) to 200h. This sets a 1024 pixel line which aligns the memory page breaks and reduces any flicker.

Half Frame Buffer Disable

The half frame buffer stores the display data for dual drive LCD panels. During LCD only or simultaneous display using a single LCD panel, no special adjustments are required.

However, for simultaneous display using a dual drive LCD panel, the half frame buffer must be disabled (REG[1Bh] bit 0 = 1). This results in reduced contrast on the LCD panel because the duty cycle of the LCD is halved. To compensate for this change, the pattern used by the Frame Rate Modulator (FRM) may need to be adjusted. Programming the Alternate FRM Register (REG[31h]) with the recommended value of FFh may produce more visually appealing output.

For further information on the half frame buffer and the Alternate FRM Register see the *S1D13505 Hardware Functional Specification*, document number X23A-A-001-xx.

3 Memory Models

The S1D13505 is capable of several color depths. The memory model for each color depth is packed pixel. Packed pixel data changes with each color depth from one byte containing eight consecutive pixels up to two bytes being required for one pixel.

3.1 Display Buffer Location

The S1D13505 supports either a 512k byte or 2M byte display buffer. The display buffer is memory mapped and can be accessed directly by software. The memory location allocated to the S1D13505 display buffer varies with each individual hardware platform, and is determined by the OEM.

For further information on the display buffer, see the *S1D13505 Hardware Functional Specification*, document number X23A-A-001-xx.

3.1.1 Memory Organization for One Bit-Per-Pixel (2 Colors/Gray Shades)

Bit 7	Bit 6	Bit 5	Bit 4	Bit 3	Bit 2	Bit 1	Bit 0
Pixel 0	Pixel 1	Pixel 2	Pixel 3	Pixel 4	Pixel 5	Pixel 6	Pixel 7

Figure 3-1: Pixel Storage for 1 Bpp (2 Colors/Gray Shades) in One Byte of Display Buffer

In this memory format each byte of display buffer contains eight adjacent pixels. Setting or resetting any pixel will require reading the entire byte, masking out the appropriate bits and, if necessary, setting the bits to ’1’.

One bit pixels provide two gray shade/color possibilities. For monochrome panels the two gray shades are generated by indexing into the first two elements of the green component of the Look-Up Table (LUT). For color panels the two colors are derived by indexing into positions 0 and 1 of the Look-Up Table.

3.1.2 Memory Organization for Two Bit-Per-Pixel (4 Colors/Gray Shades)

Bit 7	Bit 6	Bit 5	Bit 4	Bit 3	Bit 2	Bit 1	Bit 0
Pixel 0 Bit 1	Pixel 0 Bit 0	Pixel 1 Bit 1	Pixel 1 Bit 0	Pixel 2 Bit 1	Pixel 2 Bit 0	Pixel 3 Bit 1	Pixel 3 Bit 0

Figure 3-2: Pixel Storage for 2 Bpp (4 Colors/Gray Shades) in One Byte of Display Buffer

In this memory format each byte of display buffer contains four adjacent pixels. Setting or resetting any pixel will require reading the entire byte, masking out the appropriate bits and, if necessary, setting the bits to '1'.

Two bit pixels are capable of displaying four gray shade/color combinations. For monochrome panels the four gray shades are generated by indexing into the first four elements of the green component of the Look-Up Table. For color panels the four colors are derived by indexing into positions 0 through 3 of the Look-Up Table.

3.1.3 Memory Organization for Four Bit-Per-Pixel (16 Colors/Gray Shades)

Bit 7	Bit 6	Bit 5	Bit 4	Bit 3	Bit 2	Bit 1	Bit 0
Pixel 0 Bit 3	Pixel 0 Bit 2	Pixel 0 Bit 1	Pixel 0 Bit 0	Pixel 1 Bit 3	Pixel 1 Bit 2	Pixel 1 Bit 1	Pixel 1 Bit 0

Figure 3-3: Pixel Storage for 4 Bpp (16 Colors/Gray Shades) in One Byte of Display Buffer

In this memory format each byte of display buffer contains two adjacent pixels. Setting or resetting any pixel will require reading the entire byte, masking out the upper or lower nibble (4 bits) and setting the appropriate bits to '1'.

Four bit pixels provide 16 gray shade/color possibilities. For monochrome panels the gray shades are generated by indexing into the first 16 elements of the green component of the Look-Up Table. For color panels the 16 colors are derived by indexing into the first 16 positions of the Look-Up Table.

3.1.4 Memory Organization for Eight Bit-Per-Pixel (256 Colors/16 Gray Shades)

Bit 7	Bit 6	Bit 5	Bit 4	Bit 3	Bit 2	Bit 1	Bit 0
One Pixel							

Figure 3-4: Pixel Storage for 8 Bpp (256 Colors/16 Gray Shades) in One Byte of Display Buffer

In eight bit-per-pixel mode each byte of display buffer represents one pixel on the display. At this color depth the read-modify-write cycles of the lessor pixel depths are eliminated.

Each byte indexes into one of the 256 positions of the Look-Up Table. The S1D13505 LUT supports four bits per primary color, therefore this translates into 4096 possible colors when color mode is selected. To display the fullest dynamic range of colors will require careful selection of the colors in the LUT indices and in the image to be displayed.

When monochrome mode is selected, the green component of the LUT is used to determine the gray shade intensity. The green indices, with only four bits, can resolve 16 gray shades. In this situation one might as well use four bit-per-pixel mode and conserve display buffer.

3.1.5 Memory Organization for Fifteen Bit-Per-Pixel (32768 Colors/16 Gray Shades)

Bit 15	Bit 14	Bit 13	Bit 12	Bit 11	Bit 10	Bit 9	Bit 8
Reserved	Red Bit 4	Red Bit 3	Red Bit 2	Red Bit 1	Red Bit 0	Green Bit 4	Green Bit 3
Bit 7	Bit 6	Bit 5	Bit 4	Bit 3	Bit 2	Bit 1	Bit 0
Green Bit 2	Green Bit 1	Green Bit 0	Blue Bit 4	Blue Bit 3	Blue Bit 2	Blue Bit 1	Blue Bit 0

Figure 3-5: Pixel Storage for 15 Bpp (32768 Colors/16 Gray Shades) in Two Bytes of Display Buffer

In 15 bit-per-pixel mode the S1D13505 is capable of displaying 32768 colors. The 32768 color pixel is divided into four parts: one reserved bit, five bits for red, five bits for green, and five bits for blue. In this mode the Look-Up Table is bypassed and output goes directly into the Frame Rate Modulator.

The full color range is only available on TFT/D-TFD or CRT displays. Passive LCD displays are limited to using the four most significant bits from each of the red, green and blue portions of each color. The result is 4096 ($2^4 * 2^4 * 2^4$) possible colors.

Should monochrome mode be chosen at this color depth, the output reverts to sending the four most significant bits of the green LUT component to the modulator for a total of 16 possible gray shades. In this situation one might as well use four bit-per-pixel mode and conserve display buffer.

3.1.6 Memory Organization for Sixteen Bit-Per-Pixel (65536 Colors/16 Gray Shades)

Bit 15	Bit 14	Bit 13	Bit 12	Bit 11	Bit 10	Bit 9	Bit 8
Red Bit 4	Red Bit 3	Red Bit 2	Red Bit 1	Red Bit 0	Green Bit 5	Green Bit 4	Green Bit 3
Bit 7	Bit 6	Bit 5	Bit 4	Bit 3	Bit 2	Bit 1	Bit 0
Green Bit 2	Green Bit 1	Green Bit 0	Blue Bit 4	Blue Bit 3	Blue Bit 2	Blue Bit 1	Blue Bit 0

Figure 3-6: Pixel Storage for 16 Bpp (65536 Colors/16 Gray Shades) in Two Bytes of Display Buffer

In 16 bit-per-pixel mode the S1D13505 is capable of generating 65536 colors. The 65536 color pixel is divided into three parts: five bits for red, six bits for green, and five bits for blue. In this mode the Look-Up Table is bypassed and output goes directly into the Frame Rate Modulator.

The full color range is only available on TFT/D-TFD or CRT displays. Passive LCD displays are limited to using the four most significant bits from each of the red, green and blue portions of each color. The result is 4096 ($2^4 * 2^4 * 2^4$) possible colors.

When monochrome mode is selected, the green component of the LUT is used to determine the gray shade intensity. The green indices, with only four bits, can resolve 16 gray shades. In this situation one might as well use four bit-per-pixel mode and conserve display buffer.

4 Look-Up Table (LUT)

This section is supplemental to the description of the Look-Up Table architecture found in the S1D13505 Hardware Functional Specification. Covered here is a review of the LUT registers, recommendations for the color and gray shade LUT values, and additional programming considerations for the LUT. Refer to the S1D13505 Hardware Functional Specification, document number X23A-A-001-xx for more detail.

The S1D13505 Look-Up Table is used for both the CRT and panel interface and consists of 256 indexed red/green/blue entries. Each entry is 4 bits wide. Two registers, at offsets 24h and 26h, control access to the LUT. Color depth affects how many indices will be used for image display.

In color modes, pixel values are used as indices to an RGB value stored in the Look-Up Table. In monochrome modes only the green component of the LUT is used. The value in the display buffer indexes into the LUT and the amount of green at that index controls the intensity. Monochrome mode look-ups are done for the panel interface only. The CRT interface always receives the RGB values from the Look-Up Table.

4.1 Look-Up Table Registers

REG[24h] Look-Up Table Address Register							**Read/Write**
LUT Address Bit 7	LUT Address Bit 6	LUT Address Bit 5	LUT Address Bit 4	LUT Address Bit 3	LUT Address Bit 2	LUT Address Bit 1	LUT Address Bit 0

LUT Address

The LUT address register selects which of the 256 LUT entries will be accessed. Writing to this register will select the red bank. After three successive reads or writes to the data register this register will be incremented by one.

REG[26h] Look-Up Table Data Register							**Read/Write**
LUT Data Bit 3	LUT Data Bit 2	LUT Data Bit 1	LUT Data Bit 0	n/a	n/a	n/a	n/a

LUT Data

This register is where the 4-bit red/green/blue data value is written or read. With each successive read or write the internal bank select is incremented. Three reads from this register will result in reading the red, then the green, and finally the blue values associated with the index set in the LUT address register.

After the third read the LUT address register is incremented and the internal index points to the red bank again.

4.2 Look-Up Table Organization

- The Look-Up Table treats the value of a pixel as an index into an array of colors or gray shades. For example, a pixel value of zero would point to the first LUT entry; a pixel value of 7 would point to the eighth LUT entry.
- The value inside each LUT entry represents the intensity of the given color or gray shade. This intensity can range in value between 0 and 0Fh.
- The S1D13505 Look-Up Table is linear; increasing the LUT entry number results in a lighter color or gray shade. For example, a LUT entry of 0Fh into the red LUT entry will result in a bright red output while a LUT entry of 5 would result in a dull red.

Table 4-1: Look-Up Table Configurations

Display Mode	4-Bit Wide Look-Up Table			Effective Gray Shade/Colors on an Passive Panel
	RED	GREEN	BLUE	
1 bpp gray		2		2 gray shades
2 bpp gray		4		4 gray shades
4 bpp gray		16		16 gray shades
8 bpp gray		16		16 gray shades
15 bpp gray				16 gray shades
16 bpp gray				16 gray shades
1 bpp color	2	2	2	2 colors
2 bpp color	4	4	4	4 colors
4 bpp color	16	16	16	16 colors
8 bpp color	256	256	256	256 colors
15 bpp color				4096 colors*
16 bpp color				4096 colors*

* On an active matrix panel the effective colors are determined by the interface width. (i.e. 9-bit=512, 12-bit=4096, 18-bit=64K colors) Passive panels are limited to 12-bits through the Frame Rate Modulator.

= Indicates the Look-Up Table is not used for that display mode

Color Modes

In color display modes, depending on the color depth, 2 through 256 index entries are used. The selection of which entries are used is automatic.

1 bpp color

When the S1D13505 is configured for 1 bpp color mode, the LUT is limited to the first two entries. The two LUT entries can be any two RGB values but are typically set to black-and-white.

Each byte in the display buffer contains 8 bits, each pertaining to adjacent pixels. A bit value of '0' results in the LUT 0 index value being displayed. A bit value of '1' results in the LUT 1 index value being displayed.

The following table shows the recommended values for obtaining a black-and-white mode while in 1 bpp on a color panel.

Table 4-2: Recommended LUT Values for 1 Bpp Color Mode

Index	Red	Green	Blue
00	00	00	00
01	F0	F0	F0
02	00	00	00
...	00	00	00
FF	00	00	00

= Indicates unused entries in the LUT

2 bpp color

When the S1D13505 is configured for 2 bpp color mode only the first 4 entries of the LUT are used. These four entries can be set to any desired values.

Each byte in the display buffer contains 4 adjacent pixels. Each pair of bits in the byte are used as an index into the LUT. The following table shows example values for 2 bpp color mode.

Table 4-3: Example LUT Values for 2 Bpp Color Mode

Index	Red	Green	Blue
00	00	00	00
01	70	70	70
02	A0	A0	A0
03	F0	F0	F0
04	00	00	00
...	00	00	00
FF	00	00	00

= Indicates unused entries in the LUT

4 bpp color

When the S1D13505 is configured for 4 bpp color mode the first 16 entries in the LUT are used.

Each byte in the display buffer contains two adjacent pixels. The upper and lower nibbles of the byte are used as indices into the LUT.

The following table shows LUT values that will simulate those of a VGA operating in 16 color mode.

Table 4-4: Suggested LUT Values to Simulate VGA Default 16 Color Palette

Index	Red	Green	Blue
00	00	00	00
01	00	00	0A
02	00	0A	00
03	00	0A	0A
04	0A	00	00
05	0A	00	0A
06	0A	0A	00
07	0A	0A	0A
08	00	00	00
09	00	00	0F
0A	00	0F	00
0B	00	0F	0F
0C	0F	00	00
0D	0F	00	0F
0E	0F	0F	00
0F	0F	0F	0F
10	00	00	00
...	00	00	00
FF	00	00	00

= Indicates unused entries in the LUT

8 bpp color

When the S1D13505 is configured for 8 bpp color mode all 256 entries in the LUT are used. Each byte in display buffer corresponds to one pixel and is used as an index value into the LUT.

The S1D13505 LUT has four bits (16 intensities) of intensity control per primary color while a standard VGA RAMDAC has six bits (64 intensities). This four to one difference has to be considered when attempting to match colors between a VGA RAMDAC and the S1D13505 LUT. (i.e. VGA levels 0 - 3 map to LUT level 0, VGA levels 4 - 7 map to LUT level 1...). Additionally, the significant bits of the color tables are located at different offsets within their respective bytes. After calculating the equivalent intensity value the result must be shifted into the correct bit positions.

The following table shows LUT values that will approximate the VGA default color palette.

Table 4-5: Suggested LUT Values to Simulate VGA Default 256 Color Palette

Index	R	G	B	Index	R	G	B	Index	R	G	B	Index	R	G	B
00	00	00	00	40	F0	70	70	80	30	30	70	C0	00	40	00
01	00	00	A0	41	F0	90	70	81	40	30	70	C1	00	40	10
02	00	A0	00	42	F0	B0	70	82	50	30	70	C2	00	40	20
03	00	A0	A0	43	F0	D0	70	83	60	30	70	C3	00	40	30
04	A0	00	00	44	F0	F0	70	84	70	30	70	C4	00	40	40
05	A0	00	A0	45	D0	F0	70	85	70	30	60	C5	00	30	40
06	A0	50	00	46	B0	F0	70	86	70	30	50	C6	00	20	40
07	A0	A0	A0	47	90	F0	70	87	70	30	40	C7	00	10	40
08	50	50	50	48	70	F0	70	88	70	30	30	C8	20	20	40
09	50	50	F0	49	70	F0	90	89	70	40	30	C9	20	20	40
0A	50	F0	50	4A	70	F0	B0	8A	70	50	30	CA	30	20	40
0B	50	F0	F0	4B	70	F0	D0	8B	70	60	30	CB	30	20	40
0C	F0	50	50	4C	70	F0	F0	8C	70	70	30	CC	40	20	40
0D	F0	50	F0	4D	70	D0	F0	8D	60	70	30	CD	40	20	30
0E	F0	F0	50	4E	70	B0	F0	8E	50	70	30	CE	40	20	30
0F	F0	F0	F0	4F	70	90	F0	8F	40	70	30	CF	40	20	20
10	00	00	00	50	B0	B0	F0	90	30	70	30	D0	40	20	20
11	10	10	10	51	C0	B0	F0	91	30	70	40	D1	40	20	20
12	20	20	20	52	D0	B0	F0	92	30	70	50	D2	40	30	20
13	20	20	20	53	E0	B0	F0	93	30	70	60	D3	40	30	20
14	30	30	30	54	F0	B0	F0	94	30	70	70	D4	40	40	20
15	40	40	40	55	F0	B0	E0	95	30	60	70	D5	30	40	20
16	50	50	50	56	F0	B0	D0	96	30	50	70	D6	30	40	20
17	60	60	60	57	F0	B0	C0	97	30	40	70	D7	20	40	20
18	70	70	70	58	F0	B0	B0	98	50	50	70	D8	20	40	20
19	80	80	80	59	F0	C0	B0	99	50	50	70	D9	20	40	20
1A	90	90	90	5A	F0	D0	B0	9A	60	50	70	DA	20	40	30
1B	A0	A0	A0	5B	F0	E0	B0	9B	60	50	70	DB	20	40	30
1C	B0	B0	B0	5C	F0	F0	B0	9C	70	50	70	DC	20	40	40
1D	C0	C0	C0	5D	E0	F0	B0	9D	70	50	60	DD	20	30	40

Table 4-5: Suggested LUT Values to Simulate VGA Default 256 Color Palette (Continued)

Index	R	G	B	Index	R	G	B	Index	R	G	B	Index	R	G	B
1E	E0	E0	E0	5E	D0	F0	B0	9E	70	50	60	DE	20	30	40
1F	F0	F0	F0	5F	C0	F0	B0	9F	70	50	50	DF	20	20	40
20	00	00	F0	60	B0	F0	B0	A0	70	50	50	E0	20	20	40
21	40	00	F0	61	B0	F0	C0	A1	70	50	50	E1	30	20	40
22	70	00	F0	62	B0	F0	D0	A2	70	60	50	E2	30	20	40
23	B0	00	F0	63	B0	F0	E0	A3	70	60	50	E3	30	20	40
24	F0	00	F0	64	B0	F0	F0	A4	70	70	50	E4	40	20	40
25	F0	00	B0	65	B0	E0	F0	A5	60	70	50	E5	40	20	30
26	F0	00	70	66	B0	D0	F0	A6	60	70	50	E6	40	20	30
27	F0	00	40	67	B0	C0	F0	A7	50	70	50	E7	40	20	30
28	F0	00	00	68	00	00	70	A8	50	70	50	E8	40	20	20
29	F0	40	00	69	10	00	70	A9	50	70	50	E9	40	30	20
2A	F0	70	00	6A	30	00	70	AA	50	70	60	EA	40	30	20
2B	F0	B0	00	6B	50	00	70	AB	50	70	60	EB	40	30	20
2C	F0	F0	00	6C	70	00	70	AC	50	70	70	EC	40	40	20
2D	B0	F0	00	6D	70	00	50	AD	50	60	70	ED	30	40	20
2E	70	F0	00	6E	70	00	30	AE	50	60	70	EE	30	40	20
2F	40	F0	00	6F	70	00	10	AF	50	50	70	EF	30	40	20
30	00	F0	00	70	70	00	00	B0	00	00	40	F0	20	40	20
31	00	F0	40	71	70	10	00	B1	10	00	40	F1	20	40	30
32	00	F0	70	72	70	30	00	B2	20	00	40	F2	20	40	30
33	00	F0	B0	73	70	50	00	B3	30	00	40	F3	20	40	30
34	00	F0	F0	74	70	70	00	B4	40	00	40	F4	20	40	40
35	00	B0	F0	75	50	70	00	B5	40	00	30	F5	20	30	40
36	00	70	F0	76	30	70	00	B6	40	00	20	F6	20	30	40
37	00	40	F0	77	10	70	00	B7	40	00	10	F7	20	30	40
38	70	70	F0	78	00	70	00	B8	40	00	00	F8	00	00	00
39	90	70	F0	79	00	70	10	B9	40	10	00	F9	00	00	00
3A	B0	70	F0	7A	00	70	30	BA	40	20	00	FA	00	00	00
3B	D0	70	F0	7B	00	70	50	BB	40	30	00	FB	00	00	00
3C	F0	70	F0	7C	00	70	70	BC	40	40	00	FC	00	00	00
3D	F0	70	D0	7D	00	50	70	BD	30	40	00	FD	00	00	00
3E	F0	70	B0	7E	00	30	70	BE	20	40	00	FE	00	00	00
3F	F0	70	90	7F	00	10	70	BF	10	40	00	FF	00	00	00

15 bpp color

The Look-Up Table is bypassed at this color depth, hence programming the LUT is not necessary.

16 bpp color

The Look-Up Table is bypassed at this color depth, hence programming the LUT is not necessary.

Gray Shade Modes

This discussion of gray shade/monochrome modes only applies to the panel interface. Monochrome mode is selected when register [01] bit 2 = 0. In this mode the output value to the panel is derived solely from the green component of the LUT. The CRT image will continue to be formed from all three (RGB) Look-Up Table components.

Note

In order to match the colors on a CRT with the colors on a monochrome panel it is important to ensure that the red and blue components of the Look-Up Table be set to the same intensity as the green component.

1 bpp gray shade

In 1 bpp gray shade mode only the first two entries of the green LUT are used. All other LUT entries are unused.

Table 4-6: Recommended LUT Values for 1 Bpp Gray Shade

Address	Red	Green	Blue
00	00	00	00
01	F0	F0	F0
02	00	00	00
...	00	00	00
FF	00	00	00

= Required to match CRT to panel
= Unused entries

2 bpp gray shade

In 2 bpp gray shade mode the first four green elements are used to provide values to the panel. The remaining indices are unused.

Table 4-7: Suggested Values for 2 Bpp Gray Shade

Index	Red	Green	Blue
0	00	00	00
1	50	50	50
2	A0	A0	A0
3	F0	F0	F0
4	00	00	00
...	00	00	00
FF	00	00	00

= Required to match CRT to panel
= Unused entries

4 bpp gray shade

The 4 bpp gray shade mode uses the first 16 LUT elements. The remaining indices of the LUT are unused.

Table 4-8: Suggested LUT Values for 4 Bpp Gray Shade

Index	Red	Green	Blue
00	00	00	00
01	10	10	10
02	20	20	20
03	30	30	30
04	40	40	40
05	50	50	50
06	60	60	60
07	70	70	70
08	80	80	80
09	90	90	90
0A	A0	A0	A0
0B	B0	B0	B0
0C	C0	C0	C0
0D	D0	D0	D0
0E	E0	E0	E
0F	F0	F0	F0
10	00	00	00
...	00	00	00
FF	00	00	00

	Required to match CRT to panel
	Unused entries

8 bpp gray shade

When 8 bpp gray shade mode is selected the gray shade intensity is determined by the green LUT value. The green portion of the LUT has 16 possible intensities. There is no color advantage to selecting 8 bpp mode over 4 bpp mode; however, hardware rotate can be only used in 8 and 16 bpp modes.

15 bpp gray shade

The Look-Up Table is bypassed at this color depth, hence programming the LUT is not necessary.

As with 8 bpp there are limitations to the colors which can be displayed. In this mode the four most significant bits of green are used to set the absolute intensity of the image. Four bits of green resolves to 16 colors. Now however, each pixel requires two bytes.

16 bpp gray

The Look-Up Table is bypassed at this color depth, hence programming the LUT is not necessary.

As with 8 bpp there are limitations to the colors which can be displayed. In this mode the four most significant bits of green are used to set the absolute intensity of the image. Four bits of green resolves to 16 colors. Now however, each pixel requires two bytes.

5 Advanced Techniques

This section presents information on the following:

- virtual display
- panning and scrolling
- split screen display

5.1 Virtual Display

Virtual display refers to the situation where the image to be viewed is larger than the physical display. This can be in the horizontal, the vertical or both dimensions. To view the image, the display is used as a window (or viewport) into the display buffer. At any given time only a portion of the image is visible. Panning and scrolling are used to view the full image.

The Memory Address Offset registers are used to determine the number of horizontal pixels in the virtual image. The offset registers can be set for a maximum of 2^{11} or 2048 words. In 1 bpp display modes these 2048 words cover 16,384 pixels. At 16 bpp 2048 words cover 1024 pixels.

The maximum vertical size of the virtual image is the result of a number of variables. In its simplest, the number of lines is the total display buffer divided by the number of bytes per horizontal line. The number of bytes per line is the number of words in the offset register multiplied by two. At maximum horizontal size, the greatest number of lines that can be displayed is 1024. Reducing the horizontal size makes memory available to increase the virtual vertical size.

In addition to the calculated limit the virtual vertical size is limited by the size and location of the half frame buffer and the ink/cursor if present.

Seldom are the maximum sizes used. Figure 5-1: “Viewport Inside a Virtual Display,” depicts a more typical use of a virtual display. The display panel is 320x240 pixels, an image of 640x480 pixels can be viewed by navigating a 320x240 pixel viewport around the image using panning and scrolling.

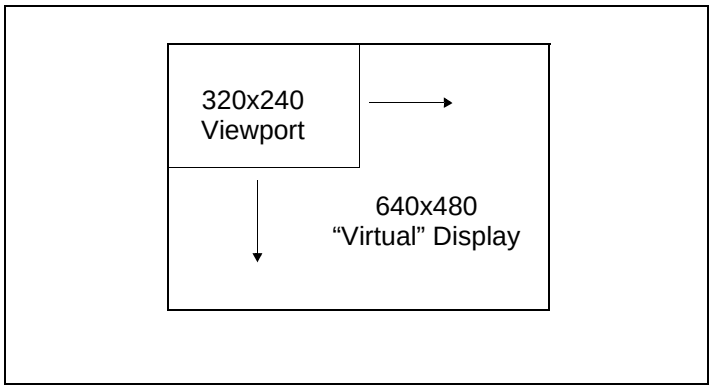

Figure 5-1: Viewport Inside a Virtual Display

5.1.1 Registers

REG[16h] Memory Address Offset Register 0							
Memory Address Offset Bit 7	Memory Address Offset Bit 6	Memory Address Offset Bit 5	Memory Address Offset Bit 4	Memory Address Offset Bit 3	Memory Address Offset Bit 2	Memory Address Offset Bit 1	Memory Address Offset Bit 0

REG[17h] Memory Address Offset Register 1							
n/a	n/a	n/a	n/a	n/a	Memory Address Offset Bit 10	Memory Address Offset Bit 9	Memory Address Offset Bit 8

Figure 5-2: Memory Address Offset Registers

Registers [16h] and [17h] form an 11-bit value called the memory address offset. This offset is the number of words from the beginning of one line of the display to the beginning of the next line of the display.

Note that this value does not necessarily represent the number of words to be shown on the display. The display width is set in the Horizontal Display Width register. If the offset is set to the same as the display width then there is no virtual width.

To maintain a constant virtual width as color depth changes, the memory address offset must also change. At 1 bpp each word contains 16 pixels, at 16 bpp each word contains one pixel. The formula to determine the value for these registers is:

offset = pixels_per_line / pixels_per_word

5.1.2 Examples

Example 1: Determine the offset value required for 800 pixels at a color depth of 8 bpp.

At 8 bpp each byte contains one pixel, therefore each word contains two pixels.

pixels_per_word = 16 / bpp = 16 / 8 = 2

Using the above formula.

offset = pixels_per_line / pixels_per_word = 800 / 2 = 400 = 190h words

Register [17h] would be set to 01h and register [16h] would be set to 90h.

Example 2: Program the Memory Address Offset Registers to support a 16 color (4 bpp) 640x480 virtual display on a 320x240 LCD panel.

To create a virtual display the offset registers must be programmed to the horizontal size of the larger "virtual" image. After determining the amount of memory used by each line, do a calculation to see if there is enough memory to support the desired number of lines.

1. Initialize the S1D13505 registers for a 320x240 panel. (See Introduction on page 11).
2. Determine the offset register value.

   pixels_per_word = 16 / bpp = 16 / 4 = 4

   offset = pixels_per_line / pixels_per_word = 640 / 4 = 160 words = 0A0h words

   Register [17h] will be written with 00h and register [16h] will be written with A0h.
3. Check that we have enough memory for the required virtual height.

   Each line uses 160 words and we need 480 lines for a total of (160*480) 76,800 words. This display could be done on a system with the minimum supported memory size of 512 K bytes. It is safe to continue with these values.

5.2 Panning and Scrolling

The terms panning and scrolling refer to the actions used to move the viewport about a virtual display. Although the image is stored entirely in the display buffer, only a portion is actually visible at any given time.

Panning describes the horizontal (side to side) motion of the viewport. When panning to the right the image in the viewport appears to slide to the left. When panning to the left the image to appears to slide to the right. Scrolling describes the vertical (up and down) motion of the viewport. Scrolling down causes the image to appear to slide up and scrolling up causes the image to appear to slide down.

Both panning and scrolling are performed by modifying the start address register. The start address refers to the word offset in the display buffer where the image will start being displayed from. At color depths less than 15 bpp a second register, the pixel pan register, is required for smooth pixel level panning.

Internally, the S1D13505 latches different signals at different times. Due to this internal sequence, there is an order in which the start address and pixel pan registers should be accessed during scrolling operations to provide the smoothest scrolling. Setting the registers in the wrong sequence or at the wrong time will result in a “tearing” or jitter effect on the display.

The start address is latched at the beginning of each frame, therefore the start address can be set any time during the display period. The pixel pan register values are latched at the beginning of each display line and must be set during the vertical non-display period. The correct sequence for programing these registers is:

1. Wait until just after a vertical non-display period (read register [0Ah] and watch bit 7 for the non-display status).
2. Update the start address registers.
3. Wait until the next vertical non-display period.
4. Update the pixel paning register.

5.2.1 Registers

REG[10h] Screen 1 Display Start Address 0							
Start Addr Bit 7	Start Addr Bit 6	Start Addr Bit 5	Start Addr Bit 4	Start Addr Bit 3	Start Addr Bit 2	Start Addr Bit 1	Start Addr Bit 0

REG[11h] Screen 1 Display Start Address 1							
Start Addr Bit 15	Start Addr Bit 14	Start Addr Bit 13	Start Addr Bit 12	Start Addr Bit 11	Start Addr Bit 10	Start Addr Bit 9	Start Addr Bit 8

REG[12h] Screen 1 Display Start Address 2							
n/a	n/a	n/a	n/a	Start Addr Bit 19	Start Addr Bit 18	Start Addr Bit 17	Start Addr Bit 16

Figure 5-3: Screen 1 Start Address Registers

These three registers form the address of the word in the display buffer where screen 1 will start displaying from. Changing these registers by one will cause a change of 0 to 16 pixels depending on the current color depth. Refer to the following table to see the minimum number of pixels affected by a change of one to these registers.

Table 5-1: Number of Pixels Panned Using Start Address

Color Depth (bpp)	Pixels per Word	Number of Pixels Panned
1	16	16
2	8	8
4	4	4
8	2	2
15	1	1
16	1	1

REG[18h] Pixel Panning Register							
Screen 2 Pixel Pan Bit 3	Screen 2 Pixel Pan Bit 2	Screen 2 Pixel Pan Bit 1	Screen 2 Pixel Pan Bit 0	Screen 1 Pixel Pan Bit 3	Screen 1 Pixel Pan Bit 2	Screen 1 Pixel Pan Bit 1	Screen 1 Pixel Pan Bit 0

Figure 5-4: Pixel Panning Register

The pixel panning register offers finer control over pixel pans than is available with the Start Address Registers. Using this register it is possible to pan the displayed image one pixel at a time. Depending on the current color depth certain bits of the pixel pan register are not used. The following table shows this.

Table 5-2: Active Pixel Pan Bits

Color Depth (bpp)	Pixel Pan bits used
1	bits [3:0]
2	bits [2:0]
4	bits [1:0]
8	bit 0
15/16	---

5.2.2 Examples

For the examples in this section assume that the display system has been set up to view a 640x480 pixel image in a 320x240 viewport. Refer to Section 2, “Initialization” on page 12 and Section 5.1, “Virtual Display” on page 29 for assistance with these settings.

Example 3: Panning - Right and Left

To pan to the right, increment the pixel pan value. If the pixel pan value is equal to the current color depth then set the pixel pan value to zero and increment the start address value. To pan to the left decrement the pixel pan value. If the pixel pan value is less than zero set it to the color depth (bpp) less one and decrement the start address.

Note

Scrolling operations are easier to follow if a value, call it pan_value, is used to track both the pixel pan and start address. The least significant bits of pan_value will represent the pixel pan value and the more significant bits are the start address value.

The following pans to the right by one pixel in 4 bpp display mode.

1. This is a pan to the right. Increment pan_value.

   pan_value = pan_value + 1

2. Mask off the values from pan_value for the pixel panning and start address register portions. In this case, 4 bpp, the lower two bits are the pixel panning value and the upper bits are the start address.

   pixel_pan = pan_value AND 3

   start_address = pan_value SHR 3
   (the fist two bits of the shift account for the pixel_pan the last bit of the shift converts the start_address value from bytes to words)

3. Write the pixel panning and start address values to their respective registers using the procedure outlined in the registers section.

Example 4: Scrolling - Up and Down

To scroll down, increase the value in the Screen 1 Display Start Address Register by the number of words in one *virtual* scan line. To scroll up, decrease the value in the Screen 1 Display Start Address Register by the number of words in one *virtual* scan line.

Example 5: Scroll down one line for a 16 color 640x480 virtual image using a 320x240 single panel LCD.

1. To scroll down we need to know how many words each line takes up. At 16 colors (4 bpp) each byte contains two pixels so each word contains 4 pixels.

   offset_words = pixels_per_line / pixels_per_word = 640 / 4 = 160 = A0h

   We now know how much to add to the start address to scroll down one line.

2. Increment the start address by the number of words per virtual line.

   start_address = start_address + words

3. Separate the start address value into three bytes. Write the LSB to register [10h] and the MSB to register [12h].

5.3 Split Screen

Occasionally the need arises to display two distinct images on the display. For example, we may write a game where the main play area will rapidly update and we want a status display at the bottom of the screen.

The Split Screen feature of the S1D13505 allows a programmer to setup a display for such an application. The figure below illustrates setting a 320x240 panel to have Image 1 displaying from scan line 0 to scan line 99 and image 2 displaying from scan line 100 to scan line 239. Although this example picks specific values, image 1 and image 2 can be shown as varying portions of the screen

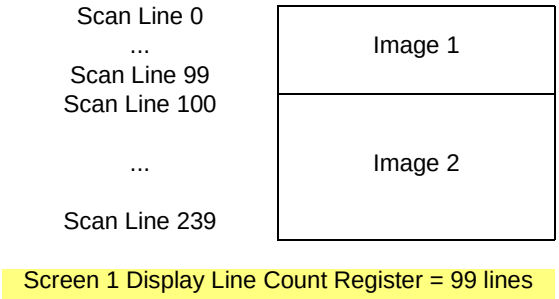

Figure 5-5: 320x240 Single Panel For Split Screen

5.3.1 Registers

The other registers required for split screen operations, [10h] through [12h] (Screen 1 Display Start Address) and [18h] (Pixel Panning Register), are described in Section 5.2.1 on page 32.

REG[0E] Screen 1 Line Compare Register 0							
Line Compare Bit 7	Line Compare Bit 6	Line Compare Bit 5	Line Compare Bit 4	Line Compare Bit 3	Line Compare Bit 2	Line Compare Bit 1	Line Compare Bit 0

REG[0F] Screen 1 Line Compare Register 1							
n/a	n/a	n/a	n/a	n/a	n/a	Line Compare Bit 9	Line Compare Bit 8

Figure 5-6: Screen 1 Line Compare

These two registers form a value known as the line compare. When the line compare value is equal to or greater than the physical number of lines being displayed there is no visible effect on the display. When the line compare value is less than the number of physically displayed lines, display operation works like this:

1. From the end of vertical non-display to the number of lines indicated by line compare the display data will be from the memory pointed to by the Screen 1 Display Start Address.

2. After *line compare* lines have been displayed the display will begin showing data from Screen 2 Display Start Address memory.

REG[13h] Screen 2 Display Start Address Register 0							
Start Addr Bit 7	Start Addr Bit 6	Start Addr Bit 5	Start Addr Bit 4	Start Addr Bit 3	Start Addr Bit 2	Start Addr Bit 1	Start Addr Bit 0

REG[14h] Screen 2 Display Start Address Register 1							
Start Addr Bit 15	Start Addr Bit 14	Start Addr Bit 13	Start Addr Bit 12	Start Addr Bit 11	Start Addr Bit 10	Start Addr Bit 9	Start Addr Bit 8

REG[15h] Screen 2 Display Start Address Register 2							
n/a	n/a	n/a	n/a	Start Addr Bit 19	Start Addr Bit 18	Start Addr Bit 17	Start Addr Bit 16

Figure 5-7: Screen 2 Display Start Address

These three registers form the twenty bit offset to the first word in the display buffer that will be shown in the screen 2 portion of the display.

Screen 1 memory is **always** displayed first at the top of the screen followed by screen 2 memory. The start address for the screen 2 image may be lower in memory than that of screen 1 (i.e. screen 2 could be coming from offset 0 in the display buffer while screen 1 was coming from an offset located several thousand bytes into the display buffer). While not particularly useful, it is possible to set screen 1 and screen 2 to the same address.

5.3.2 Examples

Example 6: Display 380 scanlines of image 1 and 100 scanlines of image 2. Image 2 is located immediately after image 1 in the display buffer. Assume a 640x480 display and a color depth of 1 bpp.

1. The value for the line compare is not dependent on any other setting so we can set it immediately (380 = 17Ch).

   Write the line compare registers [0Fh] with 01h and register [0Eh] with 7Ch.

2. Screen 1 is coming from offset 0 in the display buffer. Although not necessary, ensure that the screen 1 start address is set to zero.

   Write 00h to registers [10h], [11h] and [12h].

3. Calculate the size of the screen 1 image (so we know where the screen 2 image is located). This calculation must be performed on the virtual size (offset register) of the display. Since a virtual size was not specified assume the virtual size to be the same as the physical size.

   offset = pixels_per_line / pixels_per_word = 640 / 16 = 40 words per line

   screen1_size = offset * lines = 40 * 480 = 19,200 words = 4B00h words

4. Set the screen 2 start address to the value we just calculated.

   Write the screen 2 start address registers [15h], [14h] and [13h] with the values 00h, 4Bh and 00h respectively.

6 LCD Power Sequencing and Power Save Modes

The S1D13505 design includes a pin (LCDPWR) which may be used to control an external LCD bias power supply. If the hardware design makes use of LCDPWR, automatic LCD power sequencing and power save modes are available to the programmer. If LCDPWR is not used to control an external LCD bias power supply, this section is not applicable.

6.1 LCD Power Sequencing

The S1D13505 is designed with internal circuitry which automates LCD power sequencing (the process of powering-on and powering-off the LCD panel). LCD power sequencing allows the LCD bias voltage to discharge prior to shutting down the LCD signals. Power sequencing prevents long term damage to the panel and avoids unsightly “lines” at power-on/power-off.

Proper LCD power sequencing for power-off requires a time delay from the time the LCD power is disabled to the time the LCD signals are shut down. Power-on requires the LCD signals to be active prior to applying power to the LCD. This time interval varies depending on the LCD bias power supply design. For example, the LCD bias power supply on the S5U13505 Evaluation board requires approximately 0.5 seconds to fully discharge. Your power supply design may vary.

For most applications internal power sequencing is the appropriate choice. However, there may be situations where the internal time delay is insufficient to discharge the LCD bias power supply before the LCD signals are shut down. For the sequence used to manually power-off the LCD panel, see Section 6.1.2, “LCD Power Disable” on page 39.

6.1.1 Registers

REG[0Dh] Display Mode Register							
SwivelView Enable	Simultaneous Display Option Select Bit 1	Simultaneous Display Option Select Bit 0	Bit-Per-Pixel Select Bit 2	Bit-Per-Pixel Select Bit 1	Bit-Per-Pixel Select Bit 0	CRT Enable	LCD Enable

The LCD Enable bit triggers all automatic power sequencing.

Setting the LCD Enable bit to 1 causes the S1D13505 to enable the LCD display. The following sequence of events occurs:

1. Confirms the LCD power is disabled.
2. Enables the LCD signals.
3. Counts 128 frames.
4. Enables the LCD power.

Setting the LCD Enable bit to 0 causes the S1D13505 to disable the LCD display. The following sequence of events occurs:

1. Disables the LCD power.
2. Counts 128 frames to wait for the LCD bias power supply to discharge.
3. Disables the LCD signals.

REG[1Ah] Power Save Configuration Register							
Power Save Status (RO)	n/a	n/a	n/a	LCD Power Disable	Suspend Refresh Select Bit 1	Suspend Refresh Select Bit 0	Software Suspend Mode Enable

The LCD Power Disable bit is used to manually power-off the LCD bias power supply. Setting the LCD Power Disable bit to 1 begins discharging the LCD bias power supply. Setting the LCD Power Disable bit to 0 causes the LCD bias power supply to power-on.

If your situation requires using the LCD Power Disable bit, see Section 6.1.2, “LCD Power Disable” on page 39 for the correct procedure. The LCD Enable bit (REG[0Dh] bit 0) should be set to 1 to allow the S1D13505 to power-on the LCD using the automatic LCD Power Sequencing.

6.1.2 LCD Power Disable

If the LCD bias power supply timing requirements are different than those timings built into the S1D13505 power disable sequence, it may be necessary to manually power-off an LCD panel. One of two situations may be true:

- Delay is too short.
- Delay is too long.

Different procedures should be used for each situation. Choose the appropriate procedure based on your requirements from the following:

Delay Too Short

To lengthen the 128 frame delay on LCDPWR.

1. Set REG[1Ah] bit 3 to 1 - disable LCD Power.
2. Count 'x' Vertical Non-Display Periods.
   'x' corresponds to the power supply discharge time converted to the equivalent vertical non-display periods.
3. Set REG[0Dh] bit 0 to 0 - disable the LCD outputs.

Delay Too Long

To shorten 128 frame delay on LCDPWR.

1. Set REG[23h] bit 7 to 1 - Blanks screen by disabling the FIFO.
2. Set REG[04h] to 3 (changes display width to 32 pixels)
   Set REG[08h] to 0 (changes display height to 1 line)
   - This changes the display resolution to minimum (32x1).
3. Set REG[1Ah] bit 0 to 0 - Enables power save mode.
4. Wait delay time (based on new frame rate, see *S1D13505 Hardware Functional Specification*, document number X23A-A-001-xx)
   - at this time any clocks can be disabled.
   .
   .
   .
5. Enable any clocks that were disabled in step 4.
6. Set REG[1Ah] bit 0 to 0 - Disables power save mode.
7. Set REG[04h] to original setting
   Set REG[08h] to original setting
   - Re-initializes the original resolution.
8. Set REG[023h] bit 7 to 0 - Un-blanks screen by enabling the FIFO.

6.2 Software Power Save

The S1D13505 supports a software initiated suspend power save mode. This mode is controllable using the Software Suspend Mode Enable bit in REG[1Ah]. The type of memory refresh used during suspend can also be controlled by software.

While software suspend is enabled the following conditions apply.

- display(s) are inactive
- registers are accessible
- memory is not-accessible
- LUT is accessible

6.2.1 Registers

REG[1Ah] Power Save Configuration Register							
Power Save Status (RO)	n/a	n/a	n/a	LCD Power Disable	Suspend Refresh Select Bit 1	Suspend Refresh Select Bit 0	Software Suspend Mode Enable

The Software Suspend Mode Enable bit initiates Software suspend when set to 1. Setting the bit back to 0 returns the controller back to normal mode.

REG[1Ah] Power Save Configuration Register							
Power Save Status (RO)	n/a	n/a	n/a	LCD Power Disable	Suspend Refresh Select Bit 1	Suspend Refresh Select Bit 0	Software Suspend Mode Enable

The Suspend Refresh Select Bits specify the type of DRAM refresh used during suspend mode. The type of DRAM refresh is as follows:

Table 6-1: Suspend Refresh Selection

Suspend Refresh Select Bits [1:0]	DRAM Refresh Type
00	CAS-before-RAS (CBR) refresh
01	Self-Refresh
1X	No Refresh

Note
The Suspend Refresh Select bits should never be changed while in suspend mode.

REG[1Ah] Power Save Configuration Register							
Power Save Status (RO)	n/a	n/a	n/a	LCD Power Disable	Suspend Refresh Select Bit 1	Suspend Refresh Select Bit 0	Software Suspend Mode Enable

The Power Save Status bit is a read-only status bit which indicates the power-save state of the S1D13505. When this bit returns a 1, the panel is powered-off and the memory is in a suspend memory refresh mode. When this bit returns a 0, the S1D13505 is either powered-on, in transition of powering-on, or in transition of powering-off.

6.3 Hardware Power Save

The S1D13505 supports a hardware suspend power save mode. This mode is not programmable by software. It is controlled directly by the S1D13505 SUSPEND# pin.

While hardware suspend is enabled the following conditions apply.

- display(s) are inactive
- registers are not-accessible
- memory is not-accessible
- LUT is not-accessible

7 Hardware Cursor/Ink Layer

7.1 Introduction

The S1D13505 provides hardware support for a cursor or an ink layer. These features are mutually exclusive and therefore only one or the other may be active at any given time.

A hardware cursor improves video throughput in graphical operating systems by off-loading much of the work typically assigned to software. Take the actions which must be performed when the user moves the mouse. On a system without hardware support, the operating system must restore the area under the current cursor position then save the area under the new location and finally draw the cursor shape. Contrast that with the hardware assisted system where the operating system must simply update the cursor X and cursor Y position registers.

An ink layer is used to support stylus or pen input. Without an ink layer the operating system would have to save an area (possibly all) of the display buffer where pen input was to occur. After the system recognized the user entered characters, the display would have to be restored and the characters redrawn in a system font. With an ink layer the stylus path is drawn in the ink layer, where it overlays the displayed image. After character recognition takes place the display is updated with the new characters and the ink layer is simply cleared. There is no need to save and restore display data thus providing faster throughput.

The S1D13505 hardware cursor/ink layer supports a 2 bpp (four color) overlay image. Two of the available colors are transparent and invert. The remaining two colors are user definable.

7.2 Registers

There are a total of eleven registers dedicated to the operation of the hardware cursor/ink layer. Many of the registers need only be set once. Others, such as the positional registers, will be updated frequently.

REG[27h] Ink/Cursor Control Register							
Ink/Cursor Mode bit 1	Ink/Cursor Mode bit 0	n/a	n/a	Cursor High Threshold bit 3	Cursor High Threshold bit 2	Cursor High Threshold bit 1	Cursor High Threshold bit 0

The Ink/Cursor mode bits determine if the hardware will function as a hardware cursor or as an ink layer. See Table 7-1: for an explanation of these bits.

Table 7-1: Ink/Cursor Mode

Register [27h]		**Operating**
bit 7	**bit 6**	**Mode**
0	0	Inactive
0	1	Cursor
1	0	Ink
1	1	Reserved

When cursor mode is selected the cursor image is always 64x64 pixels. Selecting an ink layer will result in a large enough area to completely cover the display.

The cursor threshold bits are used to control the Ink/Cursor FIFO depth to sustain uninterrupted display fetches.

REG[28h] Cursor X Position Register 0							
Cursor X Position bit 7	Cursor X Position bit 6	Cursor X Position bit 5	Cursor X Position bit 4	Cursor X Position bit 3	Cursor X Position bit 2	Cursor X Position bit 1	Cursor X Position bit 0

REG[29h] Cursor X Position Register 1							
Reserved	n/a	n/a	n/a	n/a	n/a	Cursor X Position bit 9	Cursor X Position bit 8

Registers [28h] and [29h] control the horizontal position of the hardware cursor. The value in this register specifies the location of the left edge of the cursor. When ink mode is selected these registers should be set to zero.

Cursor X Position bits 9-0 determine the horizontal location of the cursor. With 10 bits of resolution the horizontal cursor range is 1024 pixels.

REG[2Ah] Cursor Y Position Register 0							
Cursor Y Position bit 7	Cursor Y Position bit 6	Cursor Y Position bit 5	Cursor Y Position bit 4	Cursor Y Position bit 3	Cursor Y Position bit 2	Cursor Y Position bit 1	Cursor Y Position bit 0

REG[2Bh] Cursor Y Position Register 0							
Reserved	n/a	n/a	n/a	n/a	n/a	Cursor Y Position bit 9	Cursor Y Position bit 8

Registers [2Ah] and [2Bh] control the vertical position of the hardware cursor. The value in this register specifies the location of the left edge of the cursor. When ink mode is selected these registers should be set to zero.

Cursor Y Position bits 9-0 determine the location of the cursor. With ten bits of resolution the vertical cursor range is 1024 pixels.

REG[2Ch] Ink/Cursor Color 0 Register 0							
Cursor Color 0 bit 7	Cursor Color 0 bit 6	Cursor Color 0 bit 5	Cursor Color 0 bit 4	Cursor Color 0 bit 3	Cursor Color 0 bit 2	Cursor Color 0 bit 1	Cursor Color 0 bit 0

REG[2Dh] Ink/Cursor Color 0 Register 1							
Cursor Color 0 bit 15	Cursor Color 0 bit 14	Cursor Color 0 bit 13	Cursor Color 0 bit 12	Cursor Color 0 bit 11	Cursor Color 0 bit 10	Cursor Color 0 bit 9	Cursor Color 0 bit 8

REG[2Eh] Ink/Cursor Color 1 Register 0							
Cursor Color 1 bit 7	Cursor Color 1 bit 6	Cursor Color 1 bit 5	Cursor Color 1 bit 4	Cursor Color 1 bit 3	Cursor Color 1 bit 2	Cursor Color 1 bit 1	Cursor Color 1 bit 0

REG[2Fh] Ink/Cursor Color 1 Register 1							
Cursor Color 1 bit 15	Cursor Color 1 bit 14	Cursor Color 1 bit 13	Cursor Color 1 bit 12	Cursor Color 1 bit 11	Cursor Color 1 bit 10	Cursor Color 1 bit 9	Cursor Color 1 bit 8

Acting in pairs, Registers [2Ch], [2Dh] and registers [2Eh], [2Fh] are used to form the 16 bpp (5-6-5) RGB values for the two user defined colors.

REG[30h] Ink/Cursor Start Address Select Register							
Ink/Cursor Start Address bit 7	Ink/Cursor Start Address bit 6	Ink/Cursor Start Address bit 5	Ink/Cursor Start Address bit 4	Ink/Cursor Start Address bit 3	Ink/Cursor Start Address bit 2	Ink/Cursor Start Address bit 1	Ink/Cursor Start Address bit 0

Register [30h] determines the location in the display buffer where the cursor/ink layer will be located. Table 7-2: can be used to determine this location.

Note
Bit 7 is write only, when reading back the register this bit reads a '0'.

Table 7-2: Cursor/Ink Start Address Encoding

Ink/Cursor Start Address Bits [7:0]	Start Address (Bytes)
0	Display Buffer Size - 1024
1 - FFh	Display Buffer Size - (n * 8192)

7.3 Limitations

There are limitations for using the hardware cursor/ink layer which should be noted.

7.3.1 Updating Hardware Cursor Addresses

All hardware cursor addresses must be set during VNDP (vertical non-display period). Check the VNDP status bit (REG[0Ah] bit 7) to determine if you are in VNDP, then update the cursor address register.

7.3.2 Reg[29h] And Reg[2Bh]

Bit seven of registers [29h] and [2Bh] are write only, and must always be set to zero as setting these bits to one, will cause undefined cursor behavior.

7.3.3 Reg [30h]

Bit 7 of register [30h] is write only, therefore programs cannot determine the current cursor/ink layer start address by reading register [30h]. It is suggested that values written to this register be stored elsewhere and used when the current state of this register is required.

7.3.4 No Top/Left Clipping on Hardware Cursor

The S1D13505 does not clip the hardware cursor on the top or left edges of the display. For cursor shapes where the hot spot is not the upper left corner of the image (the hourglass for instance), the cursor image will have to be modified to clip the cursor shape.

7.4 Examples

See Section 12, “Sample Code” for hardware cursor programming examples.

8 SwivelView

8.1 Introduction To SwivelView

LCD panels are typically designed with row and column drivers mounted such that the panel's horizontal size is larger than the vertical size. These panels are typically referred to as “Landscape” panels. A minority of panels have the row and column drivers mounted such that the vertical size is larger than the horizontal size. These panels are typically referred to as “Portrait” panels. The SwivelView feature is designed to allow landscape panels to operate in a portrait orientation without the Operating System driver or software knowing the panel is not in its natural orientation. Vice-versa, this 90° rotation also allows a portrait panel to operate as a landscape panel.

The S1D13505 SwivelView option allows only 90° rotation. The display image is rotated 90° in a clockwise direction allowing the panel to be mounted 90° counter-clockwise from its normal orientation. SwivelView also provides 180° and 270° rotation on some S1D13x0x products, however, the S1D13505 does not support 180° or 270° rotation.

8.2 S1D13505 SwivelView

The S1D13505 provides hardware support for SwivelView in 8, 15 and 16 bpp modes.

Enabling SwivelView carries several conditions:

- The (virtual) display offset must be set to 1024 pixels.
- The display start address is calculated differently with SwivelView enabled.
- Calculations that would result in panning in landscape mode, result in scrolling when SwivelView is enabled and vice-versa.

8.3 Registers

This section will detail each of the registers used to setup SwivelView operations on the S1D13505. The functionality of most of these registers has been covered in previous sections but is included here to make this section complete.

The first step toward setting up SwivelView operation is to set the SwivelView Enable bit to 1 (bit 7 of register [0Dh]).

REG[0Dh] Display Mode Register							
SwivelView Enable	Simultaneous Display Option Select Bit 1	Simultaneous Display Option Select Bit 0	Bit-Per-Pixel Select Bit 2	Bit-Per-Pixel Select Bit 1	Bit-Per-Pixel Select Bit 0	CRT Enable	LCD Enable

Step two involves setting the screen 1 start address registers. Set to 1024 - width for 16 bpp modes and to (1024 - width) / 2 for 8 bpp modes.

REG[10h] Screen 1 Display Start Address Register 0							
Bit 7	Bit 6	Bit 5	Bit 4	Bit 3	Bit 2	Bit 1	Bit 0

REG[11h] Screen 1 Display Start Address Register 1							
Bit 15	Bit 14	Bit 13	Bit 12	Bit 11	Bit 10	Bit 9	Bit 8

REG[12h] Screen 1 Display Start Address Register 2							
n/a	n/a	n/a	n/a	Bit 19	Bit 18	Bit 17	Bit 16

Finally set the memory address offset registers to 1024 pixels. In 16 bpp mode load registers [17h:16h] with 1024 and in 8 bpp mode load the registers with 512.

REG[16h] Memory Address Offset Register 0							
Bit 7	Bit 6	Bit 5	Bit 4	Bit 3	Bit 2	Bit 1	Bit 0

REG[17h] Memory Address Offset Register 1							
n/a	n/a	n/a	n/a	n/a	Bit 10	Bit 9	Bit 8

8.4 Limitations

The following limitations apply to SwivelView:

- Only 8/15/16 bpp modes are supported - 1/2/4 bpp modes are not supported.
- Hardware Cursor and Ink Layer images are not rotated - software rotation must be used. SwivelView must be turned off when the programmer is accessing the Hardware Cursor or the Ink Layer.
- Split screen images appear side-by-side, i.e. when SwivelView is enabled the screen is split vertically.
- Pixel panning works vertically.

Note

Drawing into the Hardware Cursor/Ink Layer with SwivelView enabled does not work without some form of address manipulation. The easiest way to ensure correct cursor/ink images is to disable SwivelView, draw in the cursor/ink memory, then re-enable SwivelView. While writing the cursor/ink memory each pixel must be transformed to its rotated position.

8.5 Examples

Example 7: Enable SwivelView for a 640x480 display at a color depth of 8 bpp.

Before enabling SwivelView, the display buffer should be cleared to make the transition smoother. Currently displayed images cannot simply be rotated by hardware.

1. Set the line offset to 1024 pixels. The Line Offset register is the offset in words.

   Write 200h to registers [17h]:[16h]. That is write 02h to register [17h] and 00h to register [16h].

2. Set the Display 1 Start Address. The Display Start Address registers form a pointer to a word, therefore the value to set the start.

   Write C0h (192 or (1024 - 480)/2) to registers [10h], [11h] and [12h]. That is write Ch) to register [10h], 00h to register [11h] and 00h to register [12h].

3. Enable SwivelView by setting bit 7 of register [0Dh].

4. The display is now configured for SwivelView. Offset zero into display memory will correspond to the upper left corner of the display. The only difference seen by the programmer will be in acknowledging that the display offset is now 1024 pixels regardless of the physical dimensions of the display surface.

Example 8: Pan the above SwivelView image to the right by 3 pixels then scroll it up by 4 pixels.

1. With SwivelView enabled, the x and y control is rotated as well. Simply swap the x and y co-ordinates and calculate as if the display were not rotated.

2. Calculate the new start address and pixel pan values.

   ```
   BytesPerScanline = 1024

   PixelPan = newX & 01h;
   StartAddr = (newY * BytesPerScanline / 2) + (newX & FFFEh) >> 1;
   ```

3. Write the start address during the display enabled portion of the frame.

   a) loop waiting for vertical non-display (b7 of register [0Ah] high).

   ```
   do register = ReadRegister(0Ah)
      while (80h != (register & 80h));
   ```

b) Loop waiting for the end of vertical non-display.

```
do register = ReadRegister(0Ah)
  while (80h == (register & 80h));
```

c) Write the new start address.

```
SetRegister(REG_SCRN1_DISP_START_ADDR0, (BYTE) (dwAddr & FFh));
SetRegister(REG_SCRN1_DISP_START_ADDR1, (BYTE)((dwAddr >> 8) & FFh));
SetRegister(REG_SCRN1_DISP_START_ADDR2, (BYTE)((dwAddr >> 16) & 0Fh));
do register = ReadRegister(0Ah)
  while (80h == (register & 80h));
```

4. Write the pixel pan value during the vertical non-display portion of the frame.

a) Coming from the above code wait for beginning of the non-display period.

```
do register = ReadRegister(0Ah)
  while (80h != (register & 80h));
```

b) Write the new pixel panning value.

```
register  = ReadRegister(18h);
register &= F0h;
register |= (PixelPan & 0Fh);
WriteRegister(18h, register);
```

9 CRT Considerations

9.1 Introduction

The S1D13505 is capable of driving either an LCD panel, or a CRT display, or both simultaneously.

As display devices, panels tend to be lax in their horizontal and vertical timing requirements. CRT displays often cannot vary by more than a very small percentage in their timing requirements before the image is degraded.

Central to the following sections are VESA timings. Rather than fill this section of the guide with pages full of register values it is recommended that the program 13505CFG.EXE be used to generate a header file with the appropriate values. For more information on VESA timings contact the Video Electronics Standards association on the world-wide web at www.vesa.org.

9.1.1 CRT Only

All CRT output should meet VESA timing specifications. The VESA specification details all the parameters of the display and non-display times as well as the input clock required to meet the times. Given a proper VESA input clock the configuration program 13505CFG.EXE will generate correct VESA timings for 640x480 and for 800x600 modes.

9.1.2 Simultaneous Display

As mentioned in the previous section, CRT timings should always comply to the VESA specification. This requirement implies that during simultaneous operation the timing must still be VESA compliant. For most panels, being run at CRT frequencies is not a problem. One side effect of running with these usually slower timings will be a flicker on the panel.

One limitation of simultaneous display is that should a dual panel be the second display device the half frame buffer must be disabled for correct operation.

10 Identifying the S1D13505

The S1D13505 can only be identified once the host interface has been enabled. The steps to identify the S1D13505 are:

1. If using an ISA evaluation board in a PC follow steps a. and b.
    a. If a reset has occurred, confirm that 16-bit mode is enabled by writing to address F8 0000h.
    b. If hardware suspend is enabled then disable the suspend by writing to address F0 0000h.
2. Enable the host interface by writing 00h to REG[1Bh].
3. Read REG[00h].
4. The production version of the S1D13505 will return a value of 0Ch.

11 Hardware Abstraction Layer (HAL)

11.1 Introduction

The HAL is a processor independent programming library provided by Epson. The HAL was developed to aid the implementation of internal test programs, and provides an easy, consistent method of programming the S1D13505 on different processor platforms. The HAL also allows for easier porting of programs between S1D1350X products. Integral to the HAL is an information structure (HAL_STRUCT) that contains configuration data on clocks, display modes, and default register values. This structure combined with the utility 13505CFG.EXE allows quick customization of a program for a new target display or environment.

Using the HAL keeps sample code simpler, although some programmers may find the HAL functions to be limited in their scope, and may wish to program the S1D13505 without using the HAL.

11.2 Contents of the HAL_STRUCT

The HAL_STRUCT below is contained in the file “hal.h” and is required to use the HAL library.

```
typedef struct tagHalStruct
{
   char  szIdString[16];
   WORD  wDetectEndian;
   WORD  wSize;
   WORD  wDefaultMode;
   BYTE  Regs[MAX_DISP_MODE][MAX_REG + 1];
   DWORD dwClkI;           /* Input Clock Frequency (in kHz) */
   DWORD dwBusClk;         /* Bus Clock Frequency (in kHz) */
   DWORD dwRegAddr;        /* Starting address of registers */
   DWORD dwDispMem;        /* Starting address of display buffer memory */
   WORD  wPanelFrameRate;  /* Desired panel frame rate */
   WORD  wCrtFrameRate;    /* Desired CRT rate */
   WORD  wMemSpeed;        /* Memory speed in ns */
   WORD  wTrc;             /* Ras to Cas Delay in ns */
   WORD  wTrp;             /* Ras Precharge time in ns */
   WORD  wTrac;            /* Ras Access Charge time in ns */
   WORD  wHostBusWidth;    /* Host CPU bus width in bits */
} HAL_STRUCT;
```

Within the Regs array in the structure are all the registers defined in the *S1D13505 Hardware Functional Specification*, document number X23A-A-001-xx. Using the 13505CFG.EXE utility you can adjust the content of the registers contained in HAL_STRUCT to allow for different LCD panel timing values and other default settings used by the HAL. In the simplest case, the program only calls a few basic HAL functions and the contents of the HAL_STRUCT are used to setup the S1D13505 for operation (see Section 11.6.3, “Building a complete application for the target example” on page 80).

11.3 Using the HAL library

To utilize the HAL library, the programmer must include two “.h” files in their code. “Hal.h” contains the HAL library function prototypes and structure definitions, and “appcfg.h” contains the instance of the HAL_STRUCT that is defined in “Hal.h” and configured by 13505CFG.EXE. Additionally, “hal_regs.h” can be included if the programmer intends to change the S1D13505 registers directly using the seGetReg() or seSetReg() functions. For a more thorough example of using the HAL see Section 12.1.1, “Sample code using the S1D13505 HAL API” on page 84.

Note

Many of the HAL library functions have pointers as parameters. The programmer should be aware that little validation of these pointers is performed, so it is up to the programmer to ensure that they adhere to the interface and use valid pointers. Programmers are recommended to use the highest warning levels of their compiler in order to verify the parameter types.

11.4 API for 13505HAL

This section is a description of the HAL library Application Programmers Interface (API). Updates and revisions to the HAL may include new functions not included in the following documentation.

Table 11-1: HAL Functions

Function	Description
Initialization:	
seRegisterDevice	Registers the S1D13505 parameters with the HAL, calls seInitHal if necessary. seRegisterDevice MUST be the first HAL function called by an application.
seInitHal	Initialize the variables used by the HAL library (called by seRegisterDevice)
seSetInit	Programs the S1D13505 for use with the default settings, calls seSetDisplayMode to do the work, clears display memory. Note: either seSetInit or seSetDisplayMode MUST be called after calling seRegisterDevice
seSetDisplayMode	Programs the S1D13505 for use with the passed display mode and flags.
General HAL Support:	
seGetId	Interpret the revision code register to determine chip id
seGetHalVersion	Return some Version information on the HAL library
seGetLibseVersion	Return version information on the LIBSE libraries (for non-x86 platforms)
seGetMemSize	Determines the amount of installed video memory

Table 11-1: HAL Functions (Continued)

Function	Description
seGetLastUsableByte	Determine the offset of the last unreserved usable byte in the display buffer
seGetBytesPerScanline	Determine the number of bytes or memory consumed per scan line in current mode
seGetScreenSize	Determine the height and width of the display surface in pixels
seSelectBusWidth	Select the bus width on the ISA evaluation card
seGetHostBusWidth	Determine the bus width set in the HAL_STRUCT
seDisplayEnable	Turn the display(s) on/off
seDisplayFifo	Turn the FIFO on/off
seDelay	Use the frame rate timing to delay for required seconds (requires registers to be initialized)
seGetLinearDispAddr	Get a pointer to the logical start address of the display buffer
Advanced HAL Functions:	
seSplitInit	Initialize split screen variables and setup start addresses
seSplitScreen	Set the size of either the top or bottom screen
seVirtInit	Initialize virtual screen mode setting x and y sizes
seVirtMove	pan/scroll the virtual screen surface(s)
Register / Memory Access:	
seSetReg	Write a Byte value to the specified S1D13505 register
seSetWordReg	Write a Word value to the specified S1D13505 register
seSetDwordReg	Write a Dword value to the specified S1D13505 register
seGetReg	Read a Byte value from the specified S1D13505 register
seGetWordReg	Read a Word value from the specified S1D13505 register
seGetDwordReg	Read a Dword value from the specified S1D13505 register
seWriteDisplayBytes	Write one or more bytes to the display buffer at the specified offset
seWriteDisplayWords	Write one or more words to the display buffer at the specified offset
seWriteDisplayDwords	Write one or more dwords to the display buffer at the specified offset
seReadDisplayByte	Read a byte from the display buffer from the specified offset
seReadDisplayWord	Read a word from the display buffer from the specified offset
seReadDisplayDword	Read a dword from the display buffer from the specified offset
Color Manipulation:	
seSetLut	Write to the Look-Up Table (LUT) entries starting at index 0
seGetLut	Read from the LUT starting at index 0
seSetLutEntry	Write one LUT entry (red, green, blue) at the specified index
seGetLutEntry	Read one LUT entry (red, green, blue) from the specified index
seSetBitsPerPixel	Set the color depth
seGetBitsPerPixel	Determine the current color depth
Drawing:	
seSetPixel	Draw a pixel at (x,y) in the specified color
seGetPixel	Read pixel's color at (x,y)
seDrawLine	Draw a line from (x1,y1) to (x2,y2) in specified color
seDrawRect	Draw a rectangle from (x1,y1) to (x2,y2) in specified color
seDrawEllipse	Draw an ellipse centered at (xc,yc) of radius (xr,yr) in specified color
seDrawCircle	Draw a circle centered at (x,y) of radius r in specified color
Hardware Cursor:	
seInitCursor	Initialize hardware cursor registers and variables for use; enable cursor

Table 11-1: HAL Functions (Continued)

Function	Description
seCursorOn	Enable the cursor
seCursorOff	Disable the cursor
seGetCursorStartAddr	Determine the offset of the first byte of cursor memory in the display buffer (landscape mode)
seMoveCursor	Move the cursor to the (x.y) position specified
seSetCursorColor	Sets the specified cursor color entry (0-1) to color
seSetCursorPixel	Draw one pixel into the cursor memory at (x,y) from top left corner of cursor
seDrawCursorLine	Draw a line into the cursor memory from (x1,y1) to (x2,y2) in specified color
seDrawCursorRect	Draw a rectangle into the cursor memory from (x1,y1) to (x2,y2) in specified color
seDrawCursorEllipse	Draw an ellipse into the cursor memory centered at (xc,yc) of radius (xr,yr) in specified color
seDrawCursorCircle	Draw a circle into the cursor memory centered at (x,y) of radius r in specified color
Ink Layer:	
seInitInk	Initialize the Ink layer variables and registers; enable ink layer
seInkOn	Enables the Ink layer
seInkOff	Disables the Ink layer
seGetInkStartAddr	Determine the offset of the first byte of Ink layer memory in the display buffer (landscape mode)
seSetInkColor	Sets the specified Ink layer color entry (0-1) to color
seSetInkPixel	Draw one pixel into the Ink layer memory at (x,y) from top left corner of cursor
seDrawInkLine	Draw a line into the Ink layer memory from (x1,y1) to (x2,y2) in specified color
seDrawInkRect	Draw a rectangle into the Ink layer memory from (x1,y1) to (x2,y2) in specified color
seDrawInkEllipse	Draw an ellipse into the Ink layer memory centered at (xc,yc) of radius (xr,yr) in specified color
seDrawInkCircle	Draw a circle into the Ink layer memory centered at (x,y) of radius r in specified color
Power Save:	
seSWSuspend	Control S1D13505 SW suspend mode (enable/disable)
seHWSuspend	Control S1D13505 HW suspend mode (enable/disable)

11.5 Initialization

The following section describes the HAL functions dealing with initialization of the S1D13505. Typically a programmer will only use the calls seRegisterDevice() and seSetInit().

int seRegisterDevice(const LPHAL_STRUC lpHalInfo, int * pDevice)

Description: This function registers the S1D13505 device parameters with the HAL library. The device parameters include address range, register values, desired frame rate, etc., and are stored in the HAL_STRUCT structure pointed to by lpHalInfo. Additionally this routine allocates system memory as address space for accessing registers and the display buffer.

Parameters:
lpHalInfo - pointer to HAL_STRUCT information structure as defined in appcfg.h (HalInfo)
pDevice - pointer to the integer to receive the device ID

Return Value: ERR_OK - operation completed with no problems

Example: seRegisterDevice(&HalInfo, &DeviceId);

Note

No S1D13505 registers are changed by calling seRegisterDevice().
seRegisterDevice() MUST be called before any other HAL functions.

int seInitHal(void)

Description: This function initializes the variables used by the HAL library. This function or seRegisterDevice() must be called once when an application starts.

Normally programmers do not have to concern themselves with seInitHal(). On PC platforms, seRegisterDevice() automatically calls seInitHal(). Consecutive calls to seRegisterDevice() will not call seInitHal() again. On non-PC platforms the start-up code, supplied by Epson, will call seInitHal().However, if support code for a new operating platform is written the programmer must ensure that seInitHAL is called prior to calling other HAL functions.

Parameters: None

Return Value: ERR_OK - operation completed with no problems

seSetInit(int DevID)

Description: This routine sets the S1D13505 registers for operation using the default settings. Initialization of the S1D13505 is a two step process consisting of initializing the HAL (seInitHal) and initializing the S1D13505 registers (seSetInit). Unlike the HAL the registers do not necessarily require initialization at program startup and may be initialized as needed (e.g. 13505PLAY.EXE).

Parameters: DevID - registered device ID (acquired in seRegisterDevice)

Return Value: ERR_OK - operation completed with no problems
ERR_FAILED- unable to complete operation. Occurs as a result an invalid register in the HAL_STRUCT.

Note

This function calls seSetDisplayMode() and uses the configuration designated to be the default by 13505CFG.EXE (wDefaultMode in HAL_STRUCT). The programmer could call
seSetDisplayMode() directly allowing the selection of any DisplayMode configuration along with the options of clearing memory and blanking the display (DISP_FIFO_OFF).

Note

It is strongly recommended that the programmer call either seSetInit() or seSetDisplay-Mode()
after seRegisterDevice() before calling any other HAL functions. If not, the programmer must manually disable hardware suspend and enable the host interface before accessing the registers

int seSetDisplayMode(int DevID, int DisplayMode, int flags)

Description: This routine sets the S1D13505 registers according to the values contained in the HAL_STRUCT register section.

Setting all the registers means that timing, display surface dimensions, and all other aspects of chip operation are set with this call, including loading default values into the color Look-Up Tables (LUTs).

Parameters:
DevID - a valid registered device ID
DisplayMode- the HAL_STRUCT register set to use:
DISP_MODE_LCD,
DISP_MODE_CRT, or
DISP_MODE_SIMULTANEOUS
flags - Can be set to one or more flags. Each flag added by using the logical OR command. Do not add mutually exclusive flags. Flags can be set to 0 to use defaults.
DONT_CLEAR_MEM (default) - do not clear memory
CLEAR_MEM - clear display buffer memory
DISP_FIFO_OFF - turn off display FIFO
(blank screen except for cursor or ink layer)
DISP_FIFO_ON (default) - turn on display FIFO

Return Value:
ERR_OK - no problems encountered
ERR_FAILED - unable to complete operation. Occurs as a result of an invalid register in the HAL_STRUCT.

See Also: seDisplayFifo() - for enabling/disabling the FIFO.

Example:
seSetDisplayMode(DevID, DISP_MODE_LCD, CLEAR_MEM | DISP_FIFO_OFF);
The above example will initialize for the LCD, and then clear display buffer memory and blank the screen. The advantage to this approach is that afterwards the application can write to the display without showing the image until memory is completely updated; the application would then call seDisplayFIFO(DevID, ON).

Note
See note from seSetInit().

11.5.1 General HAL Support

General HAL support covers the miscellaneous functions. There is usually no more than one or two functions devoted to any particular aspect of S1D13505 operation.

int seGetId(int DevID, int * pId)

Description: Reads the S1D13505 revision code register to determine the chip product and revisions. The interpreted value is returned in pID.

Parameters:
DevID - registered device ID
pId - pointer to the int to receive the controller ID.

For the S1D13505 the return values are currently:
ID_S1D13505_REV0
ID_UNKNOWN

Other HAL libraries will return their respective controller IDs upon detection of their controller.

Return Value: ERR_OK - operation completed with no problems
ERR_UNKNOWN_DEVICE - returned when pID returns ID_UNKNOWN.
(The HAL was unable to identify the display controller).

Note

seGetId() will disable hardware suspend on x86 platforms, and will enable the host interface (register [1Bh]) on all platforms.

void seGetHalVersion(const char ** pVersion, const char ** pStatus, const char **pStatusRevision)

Description: Retrieves the HAL library version. The return pointers are all to ASCII strings. A typical return would be: *pVersion == “1.01” (HAL version 1.01),*pStatus == “B” (The 'B' is the beta designator), *pStatusRevision == “5”. The programmer need only create pointers of const char type to pass as parameters (see Example below).

Parameters: pVersion - pointer to string of HAL version code
pStatus - pointer to string of HAL status code (NULL is release)
pStatusRevision - pointer to string of HAL statusRevision

Return Value: None

Example:

```
const char *pVersion, *pStatus, *pStatusRevision;
seGetHalVersion( &pVersion, &pStatus, &pStatusRevision);
```

Note

This document was written for HAL version “1.04”, so any later versions should be a superset of the functions described here.

void seGetLibseVersion(int ** Version)

Description: Retrieves the LIBSE library version for non-x86 platforms. The return pointer in parameter Version is valid if the function return value is ERR_OK.

Parameters: Version - pointer to an int to store LIBSE version code

Return Value: ERR_OK - no problems encountered, version code is valid
ERR_FAILED - unable to complete operation. Probably on x86 platform where LIBSE is not used.

int seGetMemSize(int DevID, DWORD * pSize)

Description: This routine returns the amount of installed video memory. The memory size is determined by reading the status of MD6 and MD7. *pSize will be set to either 80000h (512 KB) or 200000h (2 MB).

Parameters: DevID - registered device ID
pSize - pointer to a DWORD to receive the size

Return Value: ERR_OK - the operation completed successfully

Note

Memory size is only checked when calling seRegisterDevice(), seSetDisplayMode() or seSetInit(). Afterwards, the memory size is stored and made available through seGetMemSize().

int seGetLastUsableByte(int DevID, DWORD * pLastByte)

Description: Calculates the offset of the last byte in the display buffer which can be used by applications. Locations following LastByte are reserved for system use. Items such as the half frame buffer, hardware cursor and ink layer will be located in memory from GetLastUsableByte() + 1 to the end of memory.

It is assumed that the registers will have been initialized before calling seGetLastUsableByte(). Factors such as the half frame buffer and hardware cursor / ink layer being enabled dynamically alter the amount of display buffer available to an application. Call seGetLastUsableByte() any time the true end of usable memory is required.

Parameters: DevID - registered device ID
pLastByte - pointer to a DWORD to receive the offset to the last usable byte of display buffer

Return Value: ERR_OK - operation completed with no problems

int seGetBytesPerScanline(int DevID, UINT * pBytes)

Description: Determines the number of bytes per scan line of the current display mode. It is assumed that the registers have already been correctly initialized before seGetBytesPerScanline() is called.

The number of bytes per scanline calculation includes the value in the offset register. For rotated modes the return value will be either 1024 (8 bpp) or 2048 (15/16 bpp) to reflect the 1024 x 1024 virtual area of the rotated memory.

Parameters: DevID - registered device ID
pBytes - pointer to an integer which indicates the number of bytes per scan line

Return Value: ERR_OK - operation completed with no problems
ERR_FAILED- returned when this function is called for rotated display modes other than 8, 15 or 16 bpp.

int seGetScreenSize(int DevID, UINT * Width, UINT * Height)

Description: Gets the width and height in pixels of the display surface. The width and height are derived by reading the horizontal and vertical size registers and calculating the dimensions.

When the display is in portrait mode the dimensions will be swapped. (i.e. a 640x480 display in portrait mode will return a width and height of 480 and 640, respectively).

Parameters: DevID - registered device ID
Width - unsigned integer to receive the display width
Height - unsigned integer to receive the display height

Return value: ERR_OK - the operation completed successfully

int seSelectBusWidth(int DevID, int Width)

Description: Call this function to select the interface bus width on the ISA evaluation card. Selectable widths are 8 bit and 16 bit.

Parameters: DevID - registered device ID
Width - desired bus width. Must be 8 or 16.

Return Value: ERR_OK - the operation completed successfully
ERR_FAILED- the function was called on a non-ISA platform or width was not set to 8 or 16.

Note

This call applies to the S1D13505 ISA evaluation cards only.

int seGetHostBusWidth(int DevID, int * Width)

Description: This function retrieves the default (as set by 13505CFG.EXE) value for the host bus interface width and returns it in Width.

Parameters: DevID - registered device ID
Width - integer to hold the returned value of the host bus width

Return Value: ERR_OK - the function completed successfully

int seDisplayEnable(int DevID, BYTE State)

Description: This routine turns the display on or off by enabling or disabling the ENABLE bit of the display device (PANEL, CRT, or SIMULTANEOUS). The Display Mode setting (LCD, CRT or SIMULTANEOUS) determines which device(s) will be affected, the default mode is stored in the HAL_STRUCT.

Parameters: DevID - registered device ID
State - set to ON or OFF to respectively enable or disable the display

Return Value: ERR_OK - the function completed successfully

int seDisplayFifo(int DevID, BYTE State)

Description: This routine turns the display on or off by enabling or disabling the display FIFO (the hardware cursor and ink layer are not affected).

To quickly blank the display, use seDisplayFifo() instead of seDisplayEnable(). Enabling and disabling the display FIFO is much faster, allowing full CPU bandwidth to the display buffer.

Parameters: DevID - registered device ID
State - set to ON or OFF respectively to enable or disable the display FIFO

Return Value: ERR_OK - the function completed successfully

Note

Disabling the display FIFO will force all display data outputs to zero but horizontal and vertical sync pulses and panel power supply are still active. As stated earlier, the hardware cursor and ink layer are not affected by disabling the FIFO.

int seDelay(int DevID, DWORD Seconds)

Description: This function will delay for the number of seconds given in ***Seconds*** before returning to the caller.

This function was originally intended for non-PC platforms. Because information on how to access the timers was not always immediately available, we use the frame rate for timing calculations. The S1D13505 registers must be initialized for this function to work correctly.

The PC platform version of seDelay() calls the C timing functions and is therefore independent of the register settings.

Parameters: DevID - registered device ID
Seconds - time to delay in seconds

Return Value: ERR_OK - operation completed with no problems
ERR_FAILED- returned only on non-PC platforms when the S1D13505 registers have not been initialized.

int seGetLinearDispAddr(int device, DWORD * pDispLogicalAddr)

Description: Determines the logical address of the start of the display buffer. This address may be used in programs for direct control over the display buffer.

Parameter: device - registered device ID
pDispLogicalAddr - logical address is returned in this variable.

Return Value: ERR_OK - operation completed with no problems.

11.5.2 Advanced HAL Functions

Advanced HAL functions include the functions to support split and virtual screen operations and are the same features that were described in the section on advanced programming techniques.

int seSplitInit(int DevID, DWORD Scrn1Addr, DWORD Scrn2Addr)

Description: This function prepares the system for split screen operation. In order for split screen to function the starting address in the display buffer for the upper portion (screen 1), and the lower portion (screen 2) must be specified. Screen 1 is always displayed above screen 2 on the display regardless of the location of their respective starting addresses.

Parameters:
DevID - registered device ID
Scrn1Addr - offset in display buffer, in bytes, to the start of screen 1
Scrn2Addr - offset in display buffer, in bytes, to the start of screen 2

Return Value: ERR_OK - operation completed with no problems

Note

It is assumed that the system has been properly initialized prior to calling seSplitInit().

int seSplitScreen(int DevID, int WhichScreen, long VisibleScanlines)

Description: Changes the relevant registers to adjust the split screen according to the number of visible lines requested. *WhichScreen* determines which screen, screen 1 or screen 2, to change.

The smallest screen 1 can be set to is one line. This is due to the way the register values are used internally on the S1D13505. Setting the line compare register to zero results in one line of screen 1 being displayed followed by screen 2.

Parameters:
DevID - registered device ID
WhichScreen- must be set to 1 or 2, or use the constants SCREEN1 or SCREEN2, to identify which screen to base calculations on
VisibleScanlines- number of lines to show for the selected screen

Return Value:
ERR_OK - operation completed with no problems
ERR_HAL_BAD_ARG- argument VisibleScanlines is negative or is greater than vertical panel size or WhichScreen is not SCREEN1 or SCREEN 2.

Note

seSplitInit() must be called before calling seSplitScreen()
Changing the number of lines for one screen will also change the number of lines in the other screen (e.g. increasing screen 1 lines by 5 will reduce screen 2 lines by 5).

int seVirtInit(int DevID, DWORD VirtX, DWORD * VirtY)

Description: This function prepares the system for virtual screen operation. The programmer passes the desired virtual width, in pixels, as *VirtX*. When the routine returns, *VirtY* will contain the maximum number of lines that can be displayed at the requested virtual width.

Parameter:
DevID - registered device ID
VirtX - horizontal size of virtual display in pixels.
(Must be greater or equal to physical size of display)
VirtY - a return placeholder for the maximum number of lines available given VirtX

Return Value: ERR_OK - operation completed with no problems
ERR_HAL_BAD_ARG - returned in three situations
1) the virtual width (VirtX) is greater than the largest attainable width The maximum allowable xVirt is 7FFh * (16 / bpp))
2) the virtual width is less than the physical width, or
3) the maximum number of lines is less than the physical number of lines

Note

The system must have been properly initialized prior to calling seVirtInit()

int seVirtMove(int DevID, int WhichScreen, DWORD x, DWORD y)

Description: This routine pans and scrolls the display. In the case where split screen operation is being used the WhichScreen argument specifies which screen to move. The x and y parameters specify, in pixels, the starting location in the virtual image for the top left corner of the applicable display.

Parameter:
DevID - registered device ID
WhichScreen- must be set to 1 or 2, or use the constants SCREEN1 or SCREEN2, to identify which screen to base calculations on
x - new starting X position in pixels
y - new starting Y position in pixels

Return Value: ERR_OK - operation completed with no problems
ERR_HAL_BAD_ARG- there are several reasons for this return value:
1) WhichScreen is not SCREEN1 or SCREEN2.
2) the y argument is greater than the last available line.

Note

seVirtInit() must be called before calling seVirtMove().

11.5.3 Register / Memory Access

The Register/Memory Access functions provide access to the S1D13505 registers and display buffer through the HAL.

int seSetReg(int DevID, int Index, BYTE Value)

Description: Writes Value to the register specified by Index.

Parameters:
DevID - registered device ID
Index - register index to set
Value - value to write to the register

Return Value: ERR_OK - operation completed with no problems

int seSetWordReg(int DevID, int Index, WORD Value)

Description: Writes WORD sized Value to the register specified by Index.

Parameters: DevID - registered device ID
Index - register index to set
Value - value to write to the register

Return Value: ERR_OK - operation completed with no problems

int seSetDwordReg(int DevID, int Index, DWORD Value)

Description: Writes DWORD sized Value to the register specified by Index.

Parameters: DevID - registered device ID
Index - register index to set
Value - value to write to the register

Return Value: ERR_OK - operation completed with no problems

int seGetReg(int DevID, int Index, BYTE * pValue)

Description: Reads the value in the register specified by index.

Parameters: DevID - registered device ID
Index - register index to read
pValue - return value of the register

Return Value: ERR_OK - operation completed with no problems

int seGetWordReg(int DevID, int Index, WORD * pValue)

Description: Reads the WORD sized value in the register specified by index.

Parameters: DevID - registered device ID
Index - register index to read
pValue - return value of the register

Return Value: ERR_OK - operation completed with no problems

int seGetDwordReg(int DevID, int Index, DWORD * pValue)

Description: Reads the DWORD sized value in the register specified by index.

Parameters: DevID - registered device ID
Index - register index to read
pValue - return value of the register

Return Value: ERR_OK - operation completed with no problems

int seWriteDisplayBytes(int DevID, DWORD Offset, BYTE Value, DWORD Count)

Description: This routine writes one or more bytes to the display buffer at the offset specified by Offset. If a count greater than one is specified all bytes will have the same value.

Parameters: DevID - registered device ID
Offset - offset from start of the display buffer
Value - BYTE value to write
Count - number of bytes to write

Return Value: ERR_OK - operation completed with no problems
ERR_HAL_BAD_ARG - if the value for Offset is greater than the amount of installed memory.

Note

If offset + count > memory size, this function will limit the writes to the end of memory.

int seWriteDisplayWords(int DevID, DWORD Offset, WORD Value, DWORD Count)

Description: Writes one or more words to the display buffer.

Parameters: DevID - registered device ID
Offset - offset from start of the display buffer
Value - WORD value to write
Count - number of words to write

Return Value: ERR_OK - operation completed with no problems
ERR_HAL_BAD_ARG - if the value for Offset is greater than the amount of installed memory.

Note

If offset + (count*2) > memory size, this function will limit the writes to the end of memory.

int seWriteDisplayDwords(int DevID, DWORD Offset, DWORD Value, DWORD Count)

Description: Writes one or more dwords to the display buffer.

Parameters: DevID - registered device ID
Offset - offset from start of the display buffer
Value - DWORD value to write
Count - number of dwords to write

Return Value: ERR_OK - operation completed with no problems
ERR_HAL_BAD_ARG - if the value for Offset is greater than the amount of installed memory.

Note

If offset + (count*4) > memory size, this function will limit the writes to the end of memory.

int seReadDisplayByte(int DevID, DWORD Offset, BYTE *pByte)

Description: Reads a byte from the display buffer at the specified offset and returns the value in pByte.

Parameters: DevID - registered device ID
Offset - offset, in bytes, from start of the display buffer
pByte - return value of the display buffer location.

Return Value: ERR_OK - operation completed with no problems
ERR_HAL_BAD_ARG - if the value for Offset is greater than the amount of installed memory.

int seReadDisplayWord(int DevID, DWORD Offset, WORD *pWord)

Description: Reads a word from the display buffer at the specified offset and returns the value in pWord.

Parameters: DevID - registered device ID
Offset - offset, in bytes, from start of the display buffer
pWord - return value of the display buffer location

Return Value: ERR_OK - operation completed with no problems.
ERR_HAL_BAD_ARG - if the value for Offset is greater than the amount of installed memory.

int seReadDisplayDword(int DevID, DWORD Offset, DWORD *pDword)

Description: Reads a dword from the display buffer at the specified offset and returns the value in pDword.

Parameters: DevID - registered device ID
Offset - offset from start of the display buffer
pDword - return value of the display buffer location

Return Value: ERR_OK - operation completed with no problems.
ERR_HAL_BAD_ARG - if the value for Offset is greater than the amount of installed memory.

11.5.4 Color Manipulation

The functions in the Color Manipulation section deal with altering the color values in the Look-Up Table directly through the accessor functions and indirectly through the color depth setting functions.

int seSetLut(int DevID, BYTE *pLut, int Count)

Description: This routine can write one or more LUT entries. The writes always start with Look-Up Table index 0 and continue for *Count* entries.

A Look-Up Table entry consists of three bytes, one each for Red, Green, and Blue. The color information is stored in the four most significant bits of each byte.

Parameters: DevID - registered device ID
pLut - pointer to an array of BYTE lut[16][3]
lut[x][0] == RED component

		lut[x][1] == GREEN component
	l	ut[x][2] == BLUE component
	Count	- the number of LUT entries to write.

Return Value: ERR_OK - operation completed with no problems

int seGetLut(int DevID, BYTE *pLUT, int Count)

Description: This routine reads one or more LUT entries and puts the result in the byte array pointed to by pLUT.

A Look-Up Table entry consists of three bytes, one each for Red, Green, and Blue. The color information is stored in the four most significant bits of each byte.

Parameters:	DevID	- registered device ID
	pLUT	- pointer to an array of BYTE lut[16][3] pLUT must point to enough memory to hold *Count* x 3 bytes of data.
	Count	- the number of LUT elements to read.

Return Value: ERR_OK - operation completed with no problems

int seSetLutEntry(int DevID, int Index, BYTE *pEntry)

Description: This routine writes one LUT entry. Unlike seSetLut, the LUT entry indicated by *Index* can be any value from 0 to 255.

A Look-Up Table entry consists of three bytes, one each for Red, Green, and Blue. The color information is stored in the four most significant bits of each byte.

Parameters:	DevID	- registered device ID
	Index	- index to LUT entry (0 to 255)
	pEntry	- pointer to an array of three bytes.

Return Value: ERR_OK - operation completed with no problems

int seGetLutEntry(int DevID, int index, BYTE *pEntry)

Description: This routine reads one LUT entry from any index.

Parameters:	DevID	- registered device ID
	Index	- index to LUT entry (0 to 255)
	pEntry	- pointer to an array of three bytes

Return Value: ERR_OK - operation completed with no problems

int seSetBitsPerPixel(int DevID, UINT BitsPerPixel)

Description: This routine sets the system color depth. Valid arguments for *BitsPerPixel* is are: 1, 2, 4, 8, 15, and 16.

After performing validity checks for the requested color depth the appropriate

registers are changed and the Look-Up Table is set its default value.

This call is similar to a mode set call on a standard VGA.

Parameter: DevID - registered device ID
BitsPerPixel - desired color depth in bits per pixel

Return Value: ERR_OK - operation completed with no problems
ERR_FAILED- possible causes for this error message include:
1) attempted to set other than 8 or 15/16 bpp in portrait mode (portrait mode only supports 8 and 15/16 bpp)
2) factors such as input clock and memory speed will affect the ability to set some color depths. If the requested color depth cannot be set this call will fail

int seGetBitsPerPixel(int DevID, UINT * pBitsPerPixel)

Description: This function reads the S1D13505 registers to determine the current color depth and returns the result in *pBitsPerPixel*.

Determines the color depth of current display mode.

Parameters: DevID - registered device ID
pBitsPerPixel - return value is the current color depth (1/2/4/8/15/16 bpp)

Return Value: ERR_OK - operation completed with no problems

11.5.5 Drawing

The Drawing section covers HAL functions that deal with displaying pixels, lines and shapes.

int seSetPixel(int DevID, long x, long y, DWORD Color)

Description: Draws a pixel at coordinates (x,y) in the requested color. This routine can be used for any color depth.

Parameters: DevID - Registered device ID
x - horizontal coordinate of the pixel (starting from 0)
y - vertical coordinate of the pixel (starting from 0)
Color - at 1, 2, 4, and 8 bpp Color is an index into the LUT.
At 15 and 16 bpp Color defines the color directly
(i.e. rrrrrgggggbbbbb for 16 bpp)

Return Value: ERR_OK - operation completed with no problems.

int seGetPixel(int DevID, long x, long y, DWORD *pColor)

Description: Reads the pixel color at coordinates (x,y). This routine can be used for any color depth.

Parameters:

DevID	- Registered device ID
x	- horizontal coordinate of the pixel (starting from 0)
y	- vertical coordinate of the pixel (starting from 0)
pColor	- at 1, 2, 4, and 8 bpp pColor points to an index into the LUT. At 15 and 16 bpp pColor points to the color directly (i.e. rrrrrgggggbbbbb for 16 bpp)

Return Value: ERR_OK - operation completed with no problems.

int seDrawLine(int DevID, long x1, long y1, long x2, long y2, DWORD Color)

Description: This routine draws a line on the display from the endpoints defined by (x1,y1) to (x2,y2) in the requested Color.

seDrawLine() supports horizontal, vertical, and diagonal lines.

Parameters:

DevID	- registered device ID.
(x1, y1)	- top left corner of line
(x2, y2)	- bottom right corner of line (see note below)
Color	- color of line - For 1, 2, 4, and 8 bpp, 'Color' refers to the pixel value which points to the respective LUT/DAC entry. - For 15 and 16 bpp, 'Color' refers to the pixel value which stores the red, green, and blue intensities within a WORD.

Return Value: ERR_OK - operation completed with no problems
ERR_INVALID_REG_DEVICE - device argument is not valid.

int seDrawRect(int DevID, long x1, long y1, long x2, long y2, DWORD Color, BOOL SolidFill)

Description: This routine draws and optionally fills a rectangular area of display buffer. The upper right corner of the rectangle is defined by (x1,y1) and the lower right corner is defined by (x2,y2). The color, defined by *Color*, applies to the border and to the optional fill.

Parameters:

DevID	- registered device ID
(x1, y1)	- top left corner of the rectangle (in pixels)
(x2, y2)	- bottom right corner of the rectangle (in pixels)
Color	- The color to draw the rectangle outline and solid fill - At 1, 2, 4, and 8 bpp Color is an index into the Look-Up Table. - At 15/16 bpp Color defines the color directly (i.e. rrrrrgggggbbbbb for 16 bpp)
SolidFill	- Flag whether to fill the rectangle or simply draw the border. - Set to 0 for no fill, set to non-0 to fill the inside of the rectangle

Return Value: ERR_OK - operation completed with no problems.

int seDrawEllipse(int DevID, long xc, long yc, long xr, long yr, DWORD Color, BOOL SolidFill)

Description: This routine draws an ellipse with the center located at (xc,yc). The xr and yr parameters specify the x any y radii, in pixels, respectively. The ellipse will be drawn in the color specified in 'Color'.

Parameters:

DevID	- registered device ID
(xc, yc)	- The center location of the ellipse (in pixels)
xr	- horizontal radius of the ellipse (in pixels)
yr	- vertical radius of the ellipse (in pixels)
Color	- The color to draw the ellipse - At 1, 2, 4, and 8 bpp Color is an index into the Look-Up Table. - At 15/16 bpp Color defines the color directly (i.e. rrrrrgggggbbbbb for 16 bpp)
SolidFill	- unused

Return Value: ERR_OK - operation completed with no problems.

Note

The 'SolidFill' argument is currently unused and is included for future considerations.

int seDrawCircle(int DevID, long xc, long yc, long Radius, DWORD Color, BOOL SolidFill)

Description: This routine draws an circle with the center located at (xc,yc) and a radius of Radius. The circle will be drawn in the color specified in *Color*.

Parameters:

DevID	- registered device ID
xc, yc	- The center of the circle (in pixels)
Radius	- the circles radius (in pixels)
Color	- The color to draw the ellipse - At 1, 2, 4, and 8 bpp Color is an index into the Look-Up Table. - At 15/16 bpp Color defines the color directly (i.e. rrrrrgggggbbbbb for 16 bpp)
SolidFill	- unused

Return Value: ERR_OK - operation completed with no problems.

Note

The *SolidFill* argument is currently unused and is included for future considerations.

11.5.6 Hardware Cursor

The routines in this section support hardware cursor functionality. Several of the calls look similar to normal drawing calls (i.e. seDrawCursorLine()); however, these calls remove the programmer from having to know the particulars of the cursor memory location, layout and whether portrait mode is enabled. Note that hardware cursor and ink layers utilize some of the same registers and are mutually exclusive.

int seInitCursor(int DevID)

Description: Prepares the hardware cursor for use. This consists of determining a location in display buffer for the cursor, setting cursor memory to the transparent color and enabling the cursor.

When this call returns the cursor is enabled, the cursor image is transparent and ready to be drawn.

Parameters: DevID - a registered device ID

Return Value: ERR_OK - operation completed with no problems

int seCursorOn(int DevID)

Description: This function enables the cursor after it has been disabled through a call to seCursorOff(). After enabling the cursor will have the same shape and position as it did prior to being disabled. The exception to the size and position occurs if the ink layer was used while the cursor was disabled.

Parameters: DevID - a registered device ID

Return Value: ERR_OK - operation completed with no problems

int seCursorOff(int DevID)

Description: This routine disables the cursor. While disabled the cursor is invisible.

Parameters: DevID - a registered device ID

Return Value: ERR_OK - operation completed with no problems

int seGetCursorStartAddr(int DevID, DWORD * Offset)

Description: This function retrieves the offset to the first byte of hardware cursor memory.

Parameters: DevID - a registered device ID
Offset - a DWORD to hold the return value.

Return Value: ERR_OK - the operation completed with no problems.

int seMoveCursor(int DevID, long x, long y)

Description: Moves the upper left corner of the hardware cursor to the pixel position (x,y).

Parameters: DevID - a registered device ID
(x, y) - the (x,y) position (in pixels) to move the cursor to

Return Value: ERR_OK - operation completed with no problems

int seSetCursorColor(int DevID, int Index, DWORD Color)

Description: Sets the color of the specified ink/cursor index to 'Color'. The user definable hardware cursor colors are 16-bit 5-6-5 RGB colors.

The hardware cursor image is always 2 bpp or four colors. Two of the colors are defined to be transparent and inverse. This leaves two colors which are user definable.

Parameters: DevID - a registered device ID
Index - the cursor index to set. Valid values are 0 and 1
Color - a DWORD value which hold the requested color

Return Value: ERR_OK - operation completed with no problems
ERR_FAILED- returned if Index if other than 0 or 1

int seSetCursorPixel(int DevID, long x, long y, DWORD Color)

Description: Draws a single pixel into the hardware cursor. The pixel will be of color 'Color' located at (x,y) pixels relative to the top left of the hardware cursor.

The value of 'Color' must be 0 to 3. Values 0 and 1 refer to the two user definable colors. If 'Color' is 2 then the pixel will be transparent and if the value is 3 the pixel will be an inversion of the underlying screen color.

Parameters: DevID - a registered device ID
(x, y) - draw coordinates, in pixels, relative to the top left corner of the cursor
Color - a value of 0 to 3 to draw the pixel with

Return Value: ERR_OK - operation completed with no problems

int seDrawCursorLine(int DevID, long x1, long y1, long x2, long y2, DWORD Color)

Description: Draws a line between the two endpoints, (x1,y1) and (x2,y2), in the hardware cursor display buffer using color 'Color'.

The value of 'Color' must be 0 to 3. Values 0 and 1 refer to the two user definable colors. If 'Color' is 2 then the pixel will be transparent and if the value is 3 the pixel will be an inversion of the underlying screen color.

Parameters: DevID - a registered device ID
(x1,y1) - first line endpoint (in pixels)
(x2,y2) - second line endpoint (in pixels)
Color - a value of 0 to 3 to draw the pixel with

Return Value: ERR_OK - operation completed with no problems

int seDrawCursorRect(int DevID, long x1, long y1, long x2, long y2, DWORD Color, BOOL SolidFill)

Description: This routine will draw a rectangle in hardware cursor memory. The upper left corner of the rectangle is defined by the point (x1,y1) and the lower right is the point (x2,y2). Both points are relative to the upper left corner of the cursor.

The value of 'Color' must be 0 to 3. Values 0 and 1 refer to the two user definable colors. If 'Color' is 2 then the pixel will be transparent and if the value is 3 the pixel result will be an inversion of the underlying screen color.

If 'SolidFill' is specified the interior of the rectangle will be filled with 'Color', otherwise the rectangle is only outlined in 'Color'.

Parameters:

DevID	- a registered device ID
(x1,y1)	- upper left corner of the rectangle (in pixels)
(x2,y2)	- lower right corner of the rectangle (in pixels)
Color	- a 0 to 3 value to draw the rectangle with
SolidFill	- flag for filling the rectangle interior - if equal to 0 then outline the rectangle; if not equal to 0 then fill the rectangle with Color

Return Value: ERR_OK - operation completed with no problems

int seDrawCursorEllipse(int DevID, long xc, long yc, long xr, long yr, DWORD Color, BOOL SolidFill)

Description: This routine draws an ellipse within the hardware cursor display buffer. The ellipse will be centered on the point (xc,yc) and will have a horizontal radius of xr and a vertical radius of yr.

The value of 'Color' must be 0 to 3. Values 0 and 1 refer to the two user definable colors. If 'Color' is 2 then the pixel will be transparent and if the value is 3 the pixel will be an inversion of the underlying screen color.

Currently seDrawCursorEllipse() does not support solid fill of the ellipse.

Parameters:

DevID	- a registered device ID
(xc, yc)	- center of the ellipse (in pixels)
xr	- horizontal radius (in pixels)
yr	- vertical radius (in pixels)
Color	- 0 to 3 value to draw the pixels with
SolidFill	- flag to solid fill the ellipse (not currently used)

Return Value: ERR_OK - operation completed with no problems

int seDrawCursorCircle(int DevID, long x, long y, long Radius, DWORD Color, BOOL SolidFill)

Description: This routine draws a circle in hardware cursor display buffer. The center of the circle will be at (x,y) and the circle will have a radius of 'Radius' pixels.

The value of 'Color' must be 0 to 3. Values 0 and 1 refer to the two user definable colors. If 'Color' is 2 then the pixel will be transparent and if the value is 3 the pixel will be an inversion of the underlying screen color.

Currently seDrawCursorCircle() does not support the solid fill option.

Parameters:

DevID	- a registered device ID
(x,y)	- center of the circle (in pixels)
Radius	- radius of the circle (in pixels)
Color	- 0 to 3 value to draw the circle with
SolidFill	- flag to solid fill the circle (currently not used)

Return Value: ERR_OK - operation completed with no problems

11.5.7 Ink Layer

The functions in this section support the hardware ink layer. Overall these functions are nearly identical to the hardware cursor routines. In fact the same S1D13505 hardware is used for both features which means that only the cursor or the ink layer can be active at any given time.The difference between the hardware cursor and the ink layer is that in cursor mode the image is a maximum of 64x64 pixels and can be moved around the display while in ink layer mode the image is as large as the physical size of the display and is in a fixed position. Both the Ink layer and Hardware cursor have the same number of colors and handle these colors identically.

int seInitInk(int DevID)

Description: This routine prepares the ink layer for use. This consists of determining the start address for the ink layer, setting the ink layer to the transparent color and enabling the ink layer.

When this function returns the ink layer is enabled, transparent and ready to be drawn on.

Parameters: DevID - a registered device ID

Return Value: ERR_OK - operation completed with no problems
ERR_FAILED- if the ink layer cannot be enabled due to timing constraints this value will be returned.

int seInkOn(int DevID)

Description: Enables the ink layer after a call to seInkOff(). If the hardware cursor has not been used between the time seInkOff() was called and this call then the contents of the ink layer should be exactly as it was prior to the call to seInkOff().

Parameters: DevID - a registered device ID

Return Value: ERR_OK - operation completed with no problems

int seInkOff(int DevID)

Description: Disables the ink layer. When disabled the ink layer is not visible.

Parameters: DevID - a registered device ID

Return Value: ERR_OK - operation completed with no problems

int seGetInkStartAddr(int DevID, DWORD * Offset)

Description: This function retrieves the offset to the first byte of hardware ink layer memory.

Parameters: DevID - a registered device ID
Offset - a DWORD to hold the return value.

Return Value: ERR_OK - the operation completed with no problems.

int seSetInkColor(int DevID, int Index, DWORD Color)

Description: Sets the color of the specified ink/cursor index to 'Color'. The user definable hardware cursor colors are sixteen bit 5-6-5 RGB colors.

The hardware ink layer image is always 2 bpp or four colors. Two of the colors are defined to be transparent and inverse. This leaves two colors which are user definable.

Parameters:
DevID - a registered device ID
Index - the index, 0 or 1, to write the color to
Color - a sixteen bit RRRRRGGGGGGBBBBB color to write to 'Index'

Return Value:
ERR_OK - operation completed with no problems
ERR_FAILED- an index other than 0 or 1 was specified.

int seSetInkPixel(int DevID, long x, long y, DWORD Color)

Description: Sets one pixel located at (x,y) to the value 'Color'. The point (x,y) is relative to the upper left corner of the display.

The value of 'Color' must be 0 to 3. Values 0 and 1 refer to the two user definable colors. If 'Color' is 2 then the pixel will be transparent and if the value is 3 the pixel will be an inversion of the underlying screen color.

Parameters:
DevID - a registered device ID
(x,y) - coordinates of the pixel to draw
Color - a 0 to 3 value to draw the pixel with

Return Value:
ERR_OK - operation completed with no problems

int seDrawInkLine(int DevID, long x1, long y1, long x2, long y2, DWORD Color)

Description: This routine draws a line in 'Color' between the endpoints (x1,y1) and (x2,y2).

The value of 'Color' must be 0 to 3. Values 0 and 1 refer to the two user definable colors. If 'Color' is 2 then the pixel will be transparent and if the value is 3 the pixel will be an inversion of the underlying screen color.

Parameters:
DevID - a registered device ID
(x1,y1) - first endpoint of the line (in pixels)
(x2,y2) - second endpoint of the line (in pixels)
Color -a value from 0 to 3 to draw the line with

Return Value:
ERR_OK - operation completed with no problems

int seDrawInkRect(int DevID, long x1, long y1, long x2, long y2, DWORD Color, BOOL SolidFill)

Description: Draws a rectangle of color 'Color' and optionally fills it. The upper left corner of the rectangle is the point (x1,y1) and the lower right corner of the rectangle is the point (x2,y2).

The value of 'Color' must be 0 to 3. Values 0 and 1 refer to the two user definable colors. If 'Color' is 2 then the pixel will be transparent and if the value is 3 the pixel will be an inversion of the underlying screen color.

Parameters:

DevID	- a registered device ID
(x1,y1)	- upper left corner of the rectangle (in pixels)
(x2.y2)	- lower right corner of the rectangle (in pixels)
Color	- a two bit value (0 to 3) to draw the rectangle with
SolidFill	- a flag to indicate that the interior should be filled

Return Value: ERR_OK - operation completed with no problems

int seDrawInkEllipse(int DevID, long xc, long yc, long xr, long yr, DWORD Color, BOOL SolidFill)

Description: This routine draws an ellipse with the center located at xc,yc. The xr and yr parameters specify the x and y radii, in pixels, respectively. The ellipse will be drawn in the color specified by *'Color'*.

The value of 'Color' must be 0 to 3. Values 0 and 1 refer to the two user definable colors. If 'Color' is 2 then the pixel will be transparent and if the value is 3 the pixel will be an inversion of the underlying screen color.

This solid fill option is not yet available for this function.

Parameters:

DevID	- a registered device ID
xc,yc	- center point for the ellipse (in pixels)
xr	- horizontal radius of the ellipse (in pixels)
yr	- vertical radius of the ellipse (in pixels)
Color	- a two bit value (0 to 3) to draw the rectangle with
SolidFill	- flag to enable filling the interior of the ellipse (currently not used)

Return Value: ERR_OK - operation completed with no problems

int seDrawInkCircle(int DevID, long x, long y, long Radius, DWORD Color, BOOL SolidFill)

Description: This routine draws a circle in the ink layer display buffer. The center of the circle will be at x,y and the circle will have a radius of 'Radius' pixels.

The value of 'Color' must be 0 to 3. Values 0 and 1 refer to the two user definable colors. If 'Color' is 2 then the pixel will be transparent and if the value is 3 the pixel will be an inversion of the underlying screen color.

Currently seDrawCursorCircle() does not support the solid fill option.

Parameters:

DevID	- a registered device ID
x,y	- center of the circle (in pixels)
Radius	- circle radius (in pixels)
Color	- a two bit (0 to 3) value to draw the circle with
SolidFill	- flag to fill the interior of the circle (currently not used)

Return Value: ERR_OK - operation completed with no problems

11.5.8 Power Save

This section covers the HAL functions dealing with the Power Save features of the S1D13505.

int seSWSuspend(int DevID, BOOL Suspend)

Description: Causes the S1D13505 to enter software suspend mode.

When software suspend mode is engaged the display is disabled and display buffer is inaccessible. In this mode the registers and the LUT are accessible.

Parameters:
DevID - a registered device ID
Suspend - boolean flag to indicate which state to engage.
- enter suspend mode when non-zero and return to normal power when equal to zero.

Return Value: ERR_OK - operation completed with no problems

int seHWSuspend(int DevID, BOOL Suspend)

Description: Causes the S1D13505 to enter/leave hardware suspend mode. This option in only supported on S1D13505B0B ISA evaluation boards.

When hardware suspend mode is engaged the display is disabled and display buffer is inaccessible and the registers and LUT are inaccessible.

Parameters:
DevID - a registered device ID
Suspend - boolean flag to indicate which state to engage.
- enter suspend mode when non-zero and return to normal power when equal to zero.

Return Value: ERR_OK - operation completed with no problems

11.6 Porting LIBSE to a new target platform

Building Epson applications like a simple HelloApp for a new target platform requires 3 things, the HelloApp code, the 13505HAL library, and a some standard C functions (portable ones are encapsulated in our mini C library LIBSE).

Figure 11-1: Components needed to build 13505 HAL application

For example, when building HELLOAPP.EXE for the x86 16-bit platform, you need the HELLOAPP source files, the 13505HAL library and its include files, and some Standard C library functions (which in this case would be supplied by the compiler as part of its run-time library). As this is a DOS .EXE application, you do not need to supply start-up code that sets up the chip selects or interrupts, etc... What if you wanted to build the application for an SH-3 target, one not running DOS?

Before you can build that application to load onto the target, you need to build a C library for the target that contains enough of the Standard C functions (like sprintf and strcpy) to let you build the application. Epson supplies the LIBSE for this purpose, but your compiler may come with one included. You also need to build the 13505HAL library for the target. This library is the graphics chip dependent portion of the code. Finally, you need to build the final application, linked together with the libraries described earlier. The following examples assume that you have a copy of the complete source code for the S1D13505 utilities, including the nmake makefiles, as well as a copy of the GNU Compiler v2.7-96q3a for Hitachi SH3. These are available on the Epson Electronics America Website at http://www.eea.epson.com.

11.6.1 Building the LIBSE library for SH3 target example

In the LIBSE files, there are three main types of files:

- C files that contain the library functions.
- assembler files that contain the target specific code.
- makefiles that describe the build process to construct the library.

The C files are generic to all platforms, although there are some customizations for targets in the form of #ifdef LCEVBSH3 code (the ifdef used for the example SH3 target Low Cost Eval Board SH3). The majority of this code remains constant whichever target you build for.

The assembler files contain some platform setup code (stacks, chip selects) and jumps into the main entry point of the C code that is contained in the C file entry.c. For our example, the assembler file is STARTSH3.S and it performs only some stack setup and a jump into the code at _mainEntry (entry.c).

In the embedded targets, printf (in file rprintf.c), putchar (putchar.c) and getch (kb.c) resolve to serial character input/output. For SH3, much of the detail of handling serial IO is hidden in the monitor of the evaluation board, but in general the primitives are fairly straight forward, providing the ability to get characters to/from the serial port.

For our target example, the nmake makefile is makesh3.mk. This makefile calls the Gnu compiler at a specific location (TOOLDIR), enumerates the list of files that go into the target and builds a .a library file as the output of the build process.

With nmake.exe in your path run:

nmake -fmakesh3.mk

11.6.2 Building the HAL library for the target example

Building the HAL for the target example is less complex because the code is written in C and requires little platform specific adjustment. The nmake makefile for our example is makesh3.mk.This makefile contains the rules for building sh3 objects, the files list for the library and the library creation rules. The Gnu compiler tools are pointed to by TOOLDIR.

With nmake in your path run:

nmake -fmakesh3.mk

11.6.3 Building a complete application for the target example

The following source code is available on the Epson Electronics America Website at http://www.eea.epson.com.

```
#include <stdio.h>
#include "Hal.h"
#include "Appcfg.h"
#include "Hal_regs.h"
int main(void);
#define RED16BPP   0xf800
#define GREEN16BPP 0x07e0
#define BLUE16BPP  0x001f
int main(void)
{
               int DevId;
               UINT height, width, Bpp;
               const char *p1, *p2, *p3;
               DWORD color_red, color_blue;
               BYTE RedBlueLut[3][3] = {
                                 {0, 0, 0},                          /* Black */
                                 {0xF0, 0, 0},                       /* Red */
                                 {0, 0, 0xF0}                        /* Blue */
               };
               BOOL verbose = TRUE;
               long x1, x2, y1, y2;
               /*
               ** Call this to get hal.c linked into the image, and HalInfoArray
               ** which is defined in hal.c and used by other HAL pieces.
               */
               seGetHalVersion( &p1, &p2, &p3 );
               printf("1355 Hal version %s\n", p1);
               /*
               ** Register the device with the HAL
               ** NOTE: HalInfo is an instance of HAL_STRUCT and is defined
               ** in Appcfg.h
               */
               if (seRegisterDevice(&HalInfo, &DevId) != ERR_OK)
```

```
                {
                                printf("\r\nERROR: Unable to register device with
HAL\r\n");
                                return -1;
                }
                /*
                ** Init the SED1355 with the defaults stored in the HAL_STRUCT
                */
                if (seSetInit(DevId) != ERR_OK)
                {
                                printf("\r\nERROR: Unable to initialize the
SED1355\r\n");
                                return -1;
                }
                /*
                ** Determine the screen size
                */
                if (seGetScreenSize(DevId, &width, &height) != ERR_OK)
                {
                                printf("\r\nERROR: Unable to get screen size\r\n");
                                return -1;
                }
                /*
                ** Determine the Bpp mode, and set colors appropriately
                ** Note: if less than 15Bpp set the color Lookup Table (LUT)
                ** local color variables contain either index into LUT or RGB value
                */
                seGetBitsPerPixel(DevId, &Bpp);
                if (verbose)
                                printf("Bpp is %d\n", Bpp);
                switch(Bpp)
                {
                                case 1: /* Can't really do red and blue here */
                                                seSetLut(DevId, (BYTE *)&RedBlue-
Lut[0][0], 3);
                                                color_red =  1;
                                                color_blue = 1;
                                                break;
                                /* Set the LUT to values appropriate to Black, Red,
and Blue */
                                case 2:
                                case 4:
                                case 8:
                                                seSetLut(DevId, (BYTE *)&RedBlue-
Lut[0][0], 3);
                                                color_red  = 1;
                                                color_blue = 2;
                                                break;
                                default: /* 15 or 16 bpp */
                                                color_red  = RED16BPP;
```

```
                                                color_blue = BLUE16BPP;
                                                break;
                }
                /*
                ** Draw a Blue line from top left hand corner to bottom right hand
corner
                */
                if (seDrawLine(DevId, 0,0, width-1, height-1, color_blue) != ERR_OK)
                {
                                printf("\r\nERROR: Unable to draw line\r\n");
                                return -1;
                }
                /*
                ** Delay for 2 seconds and then draw a filled rectangle
                */
                seDelay(DevId, (DWORD)2);

                /*
                ** Centre the rectangle at 1/4 x,y and 3/4 x,y
                */
                x1 = width/4;
                x2 = width/2 + x1;
                y1 = height/4;
                y2 = height/2 + y1;
                seDrawRect(DevId, x1, y1, x2, y2, color_red, TRUE);

                /*
                ** Draw a box around the screen
                */
                if ((seDrawLine(DevId, 0, 0, width-1, 0, color_blue) != ERR_OK)
                   |(seDrawLine(DevId, 0, height-1, width-1, height-1, color_blue) !=
ERR_OK)
                   |(seDrawLine(DevId, 0, 0, 0, height-1, color_blue) != ERR_OK)
                   |(seDrawLine(DevId, width-1, 0, width-1, height-1, color_blue) !=
ERR_OK))
                {
                                printf("\r\nERROR: Unable to draw box\r\n");
                                return -1;
                }
                /*
                ** Load a cursor with a blue outlined green rectangle
                */
                seInitCursor(DevId);
                seCursorOff(DevId);
                seSetCursorColor(DevId, 0, GREEN16BPP);
                seSetCursorColor(DevId, 1, BLUE16BPP);
                seDrawCursorRect(DevId, 0, 0, 63, 63, 1, FALSE);
                seDrawCursorRect(DevId, 1, 1, 62, 62, 0, TRUE);
                seCursorOn(DevId);
```

```
                /*
                ** Delay for 2 seconds
                */
                seDelay(DevId, (DWORD)2);
                /*
                **                Move the cursor
                */
                seMoveCursor(DevId, width-1-63, 0);

                return 0;
}
```

12 Sample Code

12.1 Introduction

There are two included examples of programming the S1D13505 color graphics controller. First is a demonstration using the HAL library and the second without. These code samples are for example purposes only. Lastly, are three header files that may make some of the structures used clearer.

12.1.1 Sample code using the S1D13505 HAL API

```
*/
// Sample code using 1355HAL API
*/

*/
**-------------------------------------------------------------------------
**
** Created 1998, Epson Research & Development
** Vancouver Design Centre
** Copyright (c) Epson Research and Development, Inc. 1998. All rights reserved.
**
** The HAL API code is configured for the following:
**
** 25.175 MHz ClkI
** 640x480 8 bit dual color STN panel @60Hz
** 50 ns EDO, 32 ms (self) refresh time
** Initial color depth - 8 bpp
**
**-------------------------------------------------------------------------
*/

#include <stdio.h>
#include <stdlib.h>
#include <string.h>
#include "hal.h"                                                /* Structures,
constants and prototypes. */
#include "appcfg.h"                                             /* HAL configu-
ration information. */

/*-------------------------------------------------------------------------*/
void main(void)
{
               int ChipId;
               int Device;

               /*
               ** Initialize the HAL.
```

```
                ** This step sets up the HAL for use but does not access the 1355.
                */
                switch (seRegisterDevice(&HalInfo, &Device))
                {
                                case ERR_OK:
                                                break;
                                case HAL_DEVICE_ERR:
                                                printf("\nERROR: Too many devices
registered.");
                                                exit(1);
                                default:
                                                printf("\nERROR: Could not regis-
ter SED1355 device.");
                                                exit(1);
                }

                /*
                ** Identify that this is indeed an SED1355.
                */
                seGetId( Device, &ChipId);
                if (ID_SED1355F0A != ChipId)
                {
                                printf("\nERROR: Did not detect SED1355.");
                                exit(1);
                }

                /*
                ** Initialize the SED1355.
                ** This step will actually program the registers with values taken
from
                ** the default register table in appcfg.h.
                */
                if (ERR_OK != seSetInit(Device))
                {
                                printf("\nERROR: Could not initialize device.");
                                exit(1);
                }

                /*
                ** The default initialization clears the display.
                ** Draw a 100x100 red rectangle in the upper left corner (0,0)
                ** of the display.
                */
                seDrawRect(Device, 0, 0, 100, 100, 1, TRUE);

                /*
                ** Init the HW cursor. The HAL performs several calculations to
                ** determine the best location to place the cursor image and
                ** will use that location from here on.
```

```
                ** The background must be set to transparent.
                */
                seInitCursor(Device);
                seDrawCursorRect(Device, 0, 0, 63, 63, 2, TRUE);



                /*
                ** Set the first user definable color to black and
                ** the second user definable color to white.
                */
                seSetCursorColor(Device, 0, 0);
                seSetCursorColor(Device, 1, 0xFFFFFFFF);

                /*
                ** Draw a hollow rectangle around the cursor and move
                ** the cursor to 101,101.
                */
                seDrawCursorRect(Device, 0, 0, 63, 63, 1, FALSE);
                seMoveCursor(Device, 101, 101);
                exit(0);
}
```

12.1.2 Sample code without using the S1D13505 HAL API

```
/*
**==============================================================================
**  INIT1355.C - sample code demonstrating the initialization of the SED1355.
**               Beta release 2.0  98-10-29
**
**  The code in this example will perform initialization to the following
**  specification:
**
**  - 640 x 480 dual 16-bit color passive panel.
**  - 75 Hz frame rate.
**  - 8 BPP (256 colors).
**  - 33 MHz input clock.
**  - 2 MB of 60 ns EDO memory.
**
**                   *** This is sample code only! ***
**  This means:
**  1) Generic C is used. I assume that pointers can access the
**     relevant memory addresses (this is not always the case).
**     i.e. using the 1355B0B card on an x86 16 bit platform will require
**          changes to use a DOS extender to access memory and registers.
**  2) Register setup is done with discrete writes rather than being
**     table driven. This allows for clearer commenting. A real program
**     would probably store the register settings in an array and loop
**     through the array writing each element to a control register.
```

```
**  3) The pointer assignment for the register offset does not work on
**     x86 16 bit platforms.
**
**-----------------------------------------------------------------------------
**  Copyright (c) 1998 Epson Research and Development, Inc.
**  All Rights Reserved.
**=============================================================================
*/
/*
** Note that only the upper four bits of the LUT are actually used.
*/
unsigned char LUT8[256*3] =
{
/* Primary and secondary colors */
0x00, 0x00, 0x00,  0x00, 0x00, 0xA0,  0x00, 0xA0, 0x00,  0x00, 0xA0, 0xA0,
0xA0, 0x00, 0x00,  0xA0, 0x00, 0xA0,  0xA0, 0xA0, 0x00,  0xA0, 0xA0, 0xA0,
0x50, 0x50, 0x50,  0x00, 0x00, 0xF0,  0x00, 0xF0, 0x00,  0x00, 0xF0, 0xF0,
0xF0, 0x00, 0x00,  0xF0, 0x00, 0xF0,  0xF0, 0xF0, 0x00,  0xF0, 0xF0, 0xF0,
/* Gray shades */
0x00, 0x00, 0x00,  0x10, 0x10, 0x10,  0x20, 0x20, 0x20,  0x30, 0x30, 0x30,
0x40, 0x40, 0x40,  0x50, 0x50, 0x50,  0x60, 0x60, 0x60,  0x70, 0x70, 0x70,
0x80, 0x80, 0x80,  0x90, 0x90, 0x90,  0xA0, 0xA0, 0xA0,  0xB0, 0xB0, 0xB0,
0xC0, 0xC0, 0xC0,  0xD0, 0xD0, 0xD0,  0xE0, 0xE0, 0xE0,  0xF0, 0xF0, 0xF0,
/* Black to red */
0x00, 0x00, 0x00,  0x10, 0x00, 0x00,  0x20, 0x00, 0x00,  0x30, 0x00, 0x00,
0x40, 0x00, 0x00,  0x50, 0x00, 0x00,  0x60, 0x00, 0x00,  0x70, 0x00, 0x00,
0x80, 0x00, 0x00,  0x90, 0x00, 0x00,  0xA0, 0x00, 0x00,  0xB0, 0x00, 0x00,
0xC0, 0x00, 0x00,  0xD0, 0x00, 0x00,  0xE0, 0x00, 0x00,  0xF0, 0x00, 0x00,
/* Black to green */
0x00, 0x00, 0x00,  0x00, 0x10, 0x00,  0x00, 0x20, 0x00,  0x00, 0x30, 0x00,
0x00, 0x40, 0x00,  0x00, 0x50, 0x00,  0x00, 0x60, 0x00,  0x00, 0x70, 0x00,
0x00, 0x80, 0x00,  0x00, 0x90, 0x00,  0x00, 0xA0, 0x00,  0x00, 0xB0, 0x00,
0x00, 0xC0, 0x00,  0x00, 0xD0, 0x00,  0x00, 0xE0, 0x00,  0x00, 0xF0, 0x00,
/* Black to blue */
0x00, 0x00, 0x00,  0x00, 0x00, 0x10,  0x00, 0x00, 0x20,  0x00, 0x00, 0x30,
0x00, 0x00, 0x40,  0x00, 0x00, 0x50,  0x00, 0x00, 0x60,  0x00, 0x00, 0x70,
0x00, 0x00, 0x80,  0x00, 0x00, 0x90,  0x00, 0x00, 0xA0,  0x00, 0x00, 0xB0,
0x00, 0x00, 0xC0,  0x00, 0x00, 0xD0,  0x00, 0x00, 0xE0,  0x00, 0x00, 0xF0,
/* Blue to cyan (blue and green) */
0x00, 0x00, 0xF0,  0x00, 0x10, 0xF0,  0x00, 0x20, 0xF0,  0x00, 0x30, 0xF0,
0x00, 0x40, 0xF0,  0x00, 0x50, 0xF0,  0x00, 0x60, 0xF0,  0x00, 0x70, 0xF0,
0x00, 0x80, 0xF0,  0x00, 0x90, 0xF0,  0x00, 0xA0, 0xF0,  0x00, 0xB0, 0xF0,
0x00, 0xC0, 0xF0,  0x00, 0xD0, 0xF0,  0x00, 0xE0, 0xF0,  0x00, 0xF0, 0xF0,
/* Cyan (blue and green) to green */
0x00, 0xF0, 0xF0,  0x00, 0xF0, 0xE0,  0x00, 0xF0, 0xD0,  0x00, 0xF0, 0xC0,
0x00, 0xF0, 0xB0,  0x00, 0xF0, 0xA0,  0x00, 0xF0, 0x90,  0x00, 0xF0, 0x80,
0x00, 0xF0, 0x70,  0x00, 0xF0, 0x60,  0x00, 0xF0, 0x50,  0x00, 0xF0, 0x40,
0x00, 0xF0, 0x30,  0x00, 0xF0, 0x20,  0x00, 0xF0, 0x10,  0x00, 0xF0, 0x00,
/* Green to yellow (red and green) */
```

```
0x00, 0xF0, 0x00,  0x10, 0xF0, 0x00,  0x20, 0xF0, 0x00,  0x30, 0xF0, 0x00,
0x40, 0xF0, 0x00,  0x50, 0xF0, 0x00,  0x60, 0xF0, 0x00,  0x70, 0xF0, 0x00,
0x80, 0xF0, 0x00,  0x90, 0xF0, 0x00,  0xA0, 0xF0, 0x00,  0xB0, 0xF0, 0x00,
0xC0, 0xF0, 0x00,  0xD0, 0xF0, 0x00,  0xE0, 0xF0, 0x00,  0xF0, 0xF0, 0x00,
/* Yellow (red and green) to red */
0xF0, 0xF0, 0x00,  0xF0, 0xE0, 0x00,  0xF0, 0xD0, 0x00,  0xF0, 0xC0, 0x00,
0xF0, 0xB0, 0x00,  0xF0, 0xA0, 0x00,  0xF0, 0x90, 0x00,  0xF0, 0x80, 0x00,
0xF0, 0x70, 0x00,  0xF0, 0x60, 0x00,  0xF0, 0x50, 0x00,  0xF0, 0x40, 0x00,
0xF0, 0x30, 0x00,  0xF0, 0x20, 0x00,  0xF0, 0x10, 0x00,  0xF0, 0x00, 0x00,
/* Red to magenta (blue and red) */
0xF0, 0x00, 0x00,  0xF0, 0x00, 0x10,  0xF0, 0x00, 0x20,  0xF0, 0x00, 0x30,
0xF0, 0x00, 0x40,  0xF0, 0x00, 0x50,  0xF0, 0x00, 0x60,  0xF0, 0x00, 0x70,
0xF0, 0x00, 0x80,  0xF0, 0x00, 0x90,  0xF0, 0x00, 0xA0,  0xF0, 0x00, 0xB0,
0xF0, 0x00, 0xC0,  0xF0, 0x00, 0xD0,  0xF0, 0x00, 0xE0,  0xF0, 0x00, 0xF0,
/* Magenta (blue and red) to blue */
0xF0, 0x00, 0xF0,  0xE0, 0x00, 0xF0,  0xD0, 0x00, 0xF0,  0xC0, 0x00, 0xF0,
0xB0, 0x00, 0xF0,  0xA0, 0x00, 0xF0,  0x90, 0x00, 0xF0,  0x80, 0x00, 0xF0,
0x70, 0x00, 0xF0,  0x60, 0x00, 0xF0,  0x50, 0x00, 0xF0,  0x40, 0x00, 0xF0,
0x30, 0x00, 0xF0,  0x20, 0x00, 0xF0,  0x10, 0x00, 0xF0,  0x00, 0x00, 0xF0,
/* Black to magenta (blue and red) */
0x00, 0x00, 0x00,  0x10, 0x00, 0x10,  0x20, 0x00, 0x20,  0x30, 0x00, 0x30,
0x40, 0x00, 0x40,  0x50, 0x00, 0x50,  0x60, 0x00, 0x60,  0x70, 0x00, 0x70,
0x80, 0x00, 0x80,  0x90, 0x00, 0x90,  0xA0, 0x00, 0xA0,  0xB0, 0x00, 0xB0,
0xC0, 0x00, 0xC0,  0xD0, 0x00, 0xD0,  0xE0, 0x00, 0xE0,  0xF0, 0x00, 0xF0,
/* Black to cyan (blue and green) */
0x00, 0x00, 0x00,  0x00, 0x10, 0x10,  0x00, 0x20, 0x20,  0x00, 0x30, 0x30,
0x00, 0x40, 0x40,  0x00, 0x50, 0x50,  0x00, 0x60, 0x60,  0x00, 0x70, 0x70,
0x00, 0x80, 0x80,  0x00, 0x90, 0x90,  0x00, 0xA0, 0xA0,  0x00, 0xB0, 0xB0,
0x00, 0xC0, 0xC0,  0x00, 0xD0, 0xD0,  0x00, 0xE0, 0xE0,  0x00, 0xF0, 0xF0,
/* Red to white */
0xF0, 0x00, 0x00,  0xF0, 0x10, 0x10,  0xF0, 0x20, 0x20,  0xF0, 0x30, 0x30,
0xF0, 0x40, 0x40,  0xF0, 0x50, 0x50,  0xF0, 0x60, 0x60,  0xF0, 0x70, 0x70,
0xF0, 0x80, 0x80,  0xF0, 0x90, 0x90,  0xF0, 0xA0, 0xA0,  0xF0, 0xB0, 0xB0,
0xF0, 0xC0, 0xC0,  0xF0, 0xD0, 0xD0,  0xF0, 0xE0, 0xE0,  0xF0, 0xF0, 0xF0,
/* Green to white */
0x00, 0xF0, 0x00,  0x10, 0xF0, 0x10,  0x20, 0xF0, 0x20,  0x30, 0xF0, 0x30,
0x40, 0xF0, 0x40,  0x50, 0xF0, 0x50,  0x60, 0xF0, 0x60,  0x70, 0xF0, 0x70,
0x80, 0xF0, 0x80,  0x90, 0xF0, 0x90,  0xA0, 0xF0, 0xA0,  0xB0, 0xF0, 0xB0,
0xC0, 0xF0, 0xC0,  0xD0, 0xF0, 0xD0,  0xE0, 0xF0, 0xE0,  0xF0, 0xF0, 0xF0,
/* Blue to white */
0x00, 0x00, 0xF0,  0x10, 0x10, 0xF0,  0x20, 0x20, 0xF0,  0x30, 0x30, 0xF0,
0x40, 0x40, 0xF0,  0x50, 0x50, 0xF0,  0x60, 0x60, 0xF0,  0x70, 0x70, 0xF0,
0x80, 0x80, 0xF0,  0x90, 0x90, 0xF0,  0xA0, 0xA0, 0xF0,  0xB0, 0xB0, 0xF0,
0xC0, 0xC0, 0xF0,  0xD0, 0xD0, 0xF0,  0xE0, 0xE0, 0xF0,  0xF0, 0xF0, 0xF0
};

/*
** REGISTER_OFFSET points to the starting address of the SED1355 registers
*/
```

```
#define REGISTER_OFFSET    ((unsigned char *) 0x14000000)
/*
** DISP_MEM_OFFSET points to the starting address of the display buffer memory
*/
#define DISP_MEM_OFFSET  ((unsigned char *) 0x4000000)
/*
** DISP_MEMORY_SIZE is the size of display buffer memory
*/
#define DISP_MEMORY_SIZE   0x200000
/*
** Calculate the value to put in Ink/Cursor Start Address Select Register
**   Offset = (DISP_MEM_SIZE - (X * 8192)
** We want the offset to be just past the end of display memory so:
**   (640 * 480) = DISP_MEMORY_SIZE - (X * 8192)
**
**   CURSOR_START = (DISP_MEMORY_SIZE - (640 * 480)) / 8192
*/
#define CURSOR_START   218
void main(void)
{
  unsigned char * pRegs = REGISTER_OFFSET;
  unsigned char * pMem;
  unsigned char * pLUT;
  unsigned char * pTmp;
  unsigned char * pCursor;
  long lpCnt;
  int idx;
  int rgb;
  long x, y;
  /*
  ** Initialize the chip.
  */
  /*
  ** Step 1: Enable the host interface.
  **
  ** Register 1B: Miscellaneous Disable - host interface enabled, half frame
  **              buffer enabled.
  */
  *(pRegs + 0x1B) = 0x00;              /* 0000 0000 */
  /*
  ** Step 2: Disable the FIFO
  */
  *(pRegs + 0x23) = 0x80;              /* 1000 0000 */
  /*
  ** Step 3: Set Memory Configuration
  **
  ** Register 1: Memory Configuration - 4 ms refresh, EDO
  */
  *(pRegs + 0x01) = 0x30;              /* 0011 0000 */
```

```
/*
** Step 4: Set Performance Enhancement 0 register
*/
*(pRegs + 0x22) = 0x24;              /* 0010 0100 */
/*
** Step 5: Set the rest of the registers in order.
*/
/*
** Register 2: Panel Type - 16-bit, format 1, color, dual, passive.
*/
*(pRegs + 0x02) = 0x26;              /* 0010 0110 */
/*
** Register 3: Mod Rate
*/
*(pRegs + 0x03) = 0x00;              /* 0000 0000 */
/*
** Register 4: Horizontal Display Width (HDP) - 640 pixels
**             (640 / 8) - 1 = 79t = 4Fh
*/
*(pRegs + 0x04) = 0x4f;              /* 0100 1111 */
/*
** Register 5: Horizontal Non-Display Period (HNDP)
**                                       PCLK
**             Frame Rate = -----------------------------
**                          (HDP + HNDP) * (VDP + VNDP)
**
**                                  16,500,000
**                       = -----------------------------
**                          (640 + HNDP) * (480 + VNDP)
**
** HNDP and VNDP must be calculated such that the desired frame rate
** is achieved.
*/
*(pRegs + 0x05) = 0x1F;              /* 0001 1111 */
/*
** Register 6: HRTC/FPLINE Start Position - applicable to CRT/TFT only.
*/
*(pRegs + 0x06) = 0x00;              /* 0000 0000 */
/*
** Register 7: HRTC/FPLINE Pulse Width - applicable to CRT/TFT only.
*/
*(pRegs + 0x07) = 0x00;              /* 0000 0000 */
/*
** Registers 8-9: Vertical Display Height (VDP) - 480 lines.
**                480/2 - 1 = 239t = 0xEF
*/
*(pRegs + 0x08) = 0xEF;              /* 1110 1111 */
*(pRegs + 0x09) = 0x00;              /* 0000 0000 */
/*
```

```
** Register A: Vertical Non-Display Period (VNDP)
**             This register must be programed with register 5 (HNDP)
**             to arrive at the frame rate closest to the desired
**             frame rate.
*/
*(pRegs + 0x0A) = 0x01;             /* 0000 0001 */
/*
** Register B: VRTC/FPFRAME Start Position - applicable to CRT/TFT only.
*/
*(pRegs + 0x0B) = 0x00;             /* 0000 0000 */
/*
** Register C: VRTC/FPFRAME Pulse Width - applicable to CRT/TFT only.
*/
*(pRegs + 0x0C) = 0x00;             /* 0000 0000 */
/*
** Register D: Display Mode - 8 BPP, LCD disabled.
*/
*(pRegs + 0x0D) = 0x0C;             /* 0000 1100 */
/*
** Registers E-F: Screen 1 Line Compare - unless setting up for
**                split screen operation use 0x3FF.
*/
*(pRegs + 0x0E) = 0xFF;             /* 1111 1111 */
*(pRegs + 0x0F) = 0x03;             /* 0000 0011 */
/*
** Registers 10-12: Screen 1 Display Start Address - start at the
**                  first byte in display memory.
*/
*(pRegs + 0x10) = 0x00;             /* 0000 0000 */
*(pRegs + 0x11) = 0x00;             /* 0000 0000 */
*(pRegs + 0x12) = 0x00;             /* 0000 0000 */
/*
** Register 13-15: Screen 2 Display Start Address - not applicable
**                 unless setting up for split screen operation.
*/
*(pRegs + 0x13) = 0x00;             /* 0000 0000 */
*(pRegs + 0x14) = 0x00;             /* 0000 0000 */
*(pRegs + 0x15) = 0x00;             /* 0000 0000 */
/*
** Register 16-17: Memory Address Offset - this address represents the
**                 starting WORD. At 8BPP our 640 pixel width is 320
**                 WORDS
*/
*(pRegs + 0x16) = 0x40;             /* 0100 0000 */
*(pRegs + 0x17) = 0x01;             /* 0000 0001 */
/*
** Register 18: Pixel Panning
*/
*(pRegs + 0x18) = 0x00;             /* 0000 0000 */
```

```
/*
** Register 19: Clock Configuration - In this case we must divide
**              PCLK by 2 to arrive at the best frequency to set
**              our desired panel frame rate.
*/
*(pRegs + 0x19) = 0x01;             /* 0000 0001 */
/*
** Register 1A: Power Save Configuration - enable LCD power, CBR refresh,
**              not suspended.
*/
*(pRegs + 0x1A) = 0x00;             /* 0000 0000 */
/*
** Register 1C-1D: MD Configuration Readback - these registers are
**                 read only, but it's OK to write a 0 to keep
**                 the register configuration logic simpler.
*/
*(pRegs + 0x1C) = 0x00;             /* 0000 0000 */
*(pRegs + 0x1D) = 0x00;             /* 0000 0000 */
/*
** Register 1E-1F: General I/O Pins Configuration
*/
*(pRegs + 0x1E) = 0x00;             /* 0000 0000 */
*(pRegs + 0x1F) = 0x00;             /* 0000 0000 */
/*
** Register 20-21: General I/O Pins Control
*/
*(pRegs + 0x20) = 0x00;             /* 0000 0000 */
*(pRegs + 0x21) = 0x00;             /* 0000 0000 */
/*
** Registers 24-26: LUT control.
**                  For this example do a typical 8 BPP LUT setup.
**
** Setup the pointer to the LUT data and reset the LUT index register.
** Then, loop writing each of the RGB LUT data elements.
*/
pLUT = LUT8;
*(pRegs + 0x24) = 0;
for (idx = 0; idx < 256; idx++)
{
  for (rgb = 0; rgb < 3; rgb++)
  {
    *(pRegs + 0x26) = *pLUT;
    pLUT++;
  }
}
/*
** Register 27: Ink/Cursor Control - disable ink/cursor
*/
*(pRegs + 0x27) = 0x00;             /* 0000 0000 */
```

```
/*
** Registers 28-29: Cursor X Position
*/
*(pRegs + 0x28) = 0x00;              /* 0000 0000 */
*(pRegs + 0x29) = 0x00;              /* 0000 0000 */
/*
** Registers 2A-2B: Cursor Y Position
*/
*(pRegs + 0x2A) = 0x00;              /* 0000 0000 */
*(pRegs + 0x2B) = 0x00;              /* 0000 0000 */
/*
** Registers 2C-2D: Ink/Cursor Color 0 - blue
*/
*(pRegs + 0x2C) = 0x1F;              /* 0001 1111 */
*(pRegs + 0x2D) = 0x00;              /* 0000 0000 */
/*
** Registers 2E-2F: Ink/Cursor Color 1 - green
*/
*(pRegs + 0x2E) = 0xE0;              /* 1110 0000 */
*(pRegs + 0x2F) = 0x07;              /* 0000 0111 */
/*
** Register 30: Ink/Cursor Start Address Select
*/
*(pRegs + 0x30) = 0x00;              /* 0000 0000 */
/*
** Register 31: Alternate FRM Register
*/
*(pRegs + 0x31) = 0x00;
/*
** Register 23: Performance Enhancement - display FIFO enabled, optimum
**              performance. The FIFO threshold is set to 0x00; for
**              15/16 bpp modes, set the FIFO threshold
**              to a higher value, such as 0x1B.
*/
*(pRegs + 0x23) = 0x00;              /* 0000 0000 */
/*
** Register D: Display Mode - 8 BPP, LCD enable.
*/
*(pRegs + 0x0D) = 0x0D;              /* 0000 1101 */
/*
** Clear memory by filling 2 MB with 0
*/
pMem = DISP_MEM_OFFSET;
for (lpCnt = 0; lpCnt < DISP_MEMORY_SIZE; lpCnt++)
{
  *pMem = 0;
  pMem++;
}
/*
```

```
** Draw a 100x100 red rectangle in the upper left corner (0, 0)
** of the display.
*/
pMem = DISP_MEM_OFFSET;
for (y = 0; y < 100; y++)
{
  pTmp = pMem + y * 640L;
  for (x = 0; x < 100; x++)
  {
    *pTmp = 0x0c;
    pTmp++;
  }
}
/*
** Init the HW cursor. In this example the cursor memory will be located
** immediately after display memory. Why here? Because it's an easy
** location to calculate and will not interfere with the half frame buffer.
** Additionally, the HW cursor can be turned into an ink layer quite
** easily from this location.
*/
*(pRegs + 0x30) = CURSOR_START;
pTmp = pCursor = pMem + (DISP_MEMORY_SIZE - (CURSOR_START * 8192L));
/*
** Set the contents of the cursor memory such that the cursor
** is transparent. To do so, write a 10101010b pattern in each byte.
** The cursor is 2 bpp so a 64x64 cursor requires
** 64/4 * 64 = 1024 bytes of memory.
*/
for (lpCnt = 0; lpCnt < 1024; lpCnt++)
  {
  *pTmp = 0xAA;
  pTmp++;
  }
/*
** Set the first user definable cursor color to black and
** the second user definable cursor color to white.
*/
*(pRegs + 0x2C) = 0;
*(pRegs + 0x2D) = 0;
*(pRegs + 0x2E) = 0xFF;
*(pRegs + 0x2F) = 0xFF;
/*
** Draw a hollow rectangle around the cursor.
*/
pTmp = pCursor;
for (lpCnt = 0; lpCnt < 16; lpCnt++)
{
  *pTmp = 0x55;
  pTmp++;
```

```
  }
  for (lpCnt = 0; lpCnt < 14; lpCnt++)
  {
    *pTmp = 0x6A;
    pTmp += 15;
    *pTmp = 0xA9;
    pTmp++;
  }
  for (lpCnt = 0; lpCnt < 16; lpCnt++)
  {
    *pTmp = 0x55;
    pTmp++;
  }
  /*
  ** Move the cursor to 100, 100.
  */
  /*
  ** First we wait for the next vertical non-display
  ** period before updating the position registers.
  */
  while (*(pRegs + 0x0A) & 0x80);     /* wait while in VNDP */
  while (!(*(pRegs + 0x0A) & 0x80));  /* wait while in VDP */
  /*
  ** Now update the position registers.
  */
  *(pRegs + 0x28) = 100;   /* Set Cursor X = 100 */
  *(pRegs + 0x29) = 0x00;
  *(pRegs + 0x2A) = 100;   /* Set Cursor Y = 100 */
  *(pRegs + 0x2B) = 0x00;
  /*
  ** Enable the hardware cursor.
  */
  *(pRegs + 0x27) = 0x40;
}
}
```

12.1.3 Header Files

The following header files are included as they help to explain some of the structures used when programming the S1D13505.

The following header file defines the structure used to store the configuration information contained in all utilities using the S1D13505 HAL API.

```
/*****************************************************************************/
/*  1355 HAL INF       (do not remove)                                       */
/*  HAL_STRUCT Information generated by 1355CFG.EXE                          */
/*  Copyright (c) 1998 Epson Research and Development Inc. All rights reserved. */
/*                                                                           */
```

```
/*  Include this file ONCE in your primary source file                          */
/*******************************************************************************/

HAL_STRUCT HalInfo =
{
  "1355 HAL EXE",     /* ID string   */
  0x1234,             /* Detect Endian */
  sizeof(HAL_STRUCT), /* Size           */
  0,                  /* Default Mode */

  {
    {                /* LCD */
      0x00,  0x50,  0x16,  0x00,  0x4F,  0x03,  0x00,  0x00,
      0xEF,  0x00,  0x34,  0x00,  0x00,  0x0D,  0xFF,  0x03,
      0x00,  0x00,  0x00,  0x00,  0x00,  0x00,  0x40,  0x01,
      0x00,  0x01,  0x02,  0x00,  0x00,  0x00,  0x00,  0x00,
      0x00,  0x00,  0x48,  0x00,  0x00,  0x00,  0x00,  0x00,
      0x00,  0x00,  0x00,  0x00,  0x00,  0x00,  0x00,  0x00,
      0x00,  0x00
    },

    {                /* CRT */
      0x00,  0x50,  0x16,  0x00,  0x4F,  0x13,  0x01,  0x0B,
      0xDF,  0x01,  0x2B,  0x09,  0x01,  0x0E,  0xFF,  0x03,
      0x00,  0x00,  0x00,  0x00,  0x00,  0x00,  0x40,  0x01,
      0x00,  0x00,  0x02,  0x01,  0x00,  0x00,  0x00,  0x00,
      0x00,  0x00,  0x48,  0x00,  0x00,  0x00,  0x00,  0x00,
      0x00,  0x00,  0x00,  0x00,  0x00,  0x00,  0x00,  0x00,
      0x00,  0x00
    },

    {                /* SIMUL */
      0xFF,  0x50,  0x16,  0x00,  0x4F,  0x13,  0x01,  0x0B,
      0xDF,  0x01,  0x2B,  0x09,  0x01,  0x0F,  0xFF,  0x03,
      0x00,  0x00,  0x00,  0x00,  0x00,  0x00,  0x40,  0x01,
      0x00,  0x01,  0x02,  0x01,  0x00,  0x00,  0x00,  0x00,
      0x00,  0x00,  0x48,  0x00,  0x00,  0x00,  0x00,  0x00,
      0x00,  0x00,  0x00,  0x00,  0x00,  0x00,  0x00,  0x00,
      0x00,  0x00
    },

  },

  25175,           /* ClkI (kHz)      */
  8000,           /* BusClk (kHz)      */
  0xE00000,          /* Register Address */
  0xC00000,          /* Display Address */
  60,              /* Panel Frame Rate (Hz) */
  60,              /* CRT Frame Rate (Hz) */
```

```
  50,              /* Memory speed in ns */
  84,              /* Ras to Cas Delay in ns */
  30,              /* Ras Access Charge time in ns */
  50,              /* RAS Access Charge time in ns */
  16              /* Host CPU bus width in bits */
};
```

The following header file defines the S1D13505 HAL registers.

```
/*==============================================================================
**  HAL_REGS.H
**  Created 1998, Epson Research & Development
**                Vancouver Design Center.
**  Copyright(c) Epson Research and Development Inc. 1997, 1998.  All rights
                                    reserved.
==============================================================================*/

#ifndef __HAL_REGS_H__
#define __HAL_REGS_H__

/*
** 1355 register names
*/

#define REG_REVISION_CODE              0x00
#define REG_MEMORY_CONFIG              0x01
#define REG_PANEL_TYPE                 0x02
#define REG_MOD_RATE                   0x03
#define REG_HORZ_DISP_WIDTH            0x04
#define REG_HORZ_NONDISP_PERIOD        0x05
#define REG_HRTC_START_POSITION        0x06
#define REG_HRTC_PULSE_WIDTH           0x07
#define REG_VERT_DISP_HEIGHT0          0x08
#define REG_VERT_DISP_HEIGHT1          0x09
#define REG_VERT_NONDISP_PERIOD        0x0A
#define REG_VRTC_START_POSITION        0x0B
#define REG_VRTC_PULSE_WIDTH           0x0C
#define REG_DISPLAY_MODE               0x0D
#define REG_SCRN1_LINE_COMPARE0        0x0E
#define REG_SCRN1_LINE_COMPARE1        0x0F
#define REG_SCRN1_DISP_START_ADDR0     0x10
#define REG_SCRN1_DISP_START_ADDR1     0x11
#define REG_SCRN1_DISP_START_ADDR2     0x12
#define REG_SCRN2_DISP_START_ADDR0     0x13
#define REG_SCRN2_DISP_START_ADDR1     0x14
#define REG_SCRN2_DISP_START_ADDR2     0x15
#define REG_MEM_ADDR_OFFSET0           0x16
#define REG_MEM_ADDR_OFFSET1           0x17
#define REG_PIXEL_PANNING              0x18
```

```
#define REG_CLOCK_CONFIG                0x19
#define REG_POWER_SAVE_CONFIG           0x1A
#define REG_MISC                        0x1B
#define REG_MD_CONFIG_READBACK0         0x1C
#define REG_MD_CONFIG_READBACK1         0x1D
#define REG_GPIO_CONFIG0                0x1E
#define REG_GPIO_CONFIG1                0x1F
#define REG_GPIO_CONTROL0               0x20
#define REG_GPIO_CONTROL1               0x21
#define REG_PERF_ENHANCEMENT0           0x22
#define REG_PERF_ENHANCEMENT1           0x23
#define REG_LUT_ADDR                    0x24
#define REG_RESERVED_1                  0x25
#define REG_LUT_DATA                    0x26
#define REG_INK_CURSOR_CONTROL          0x27
#define REG_CURSOR_X_POSITION0          0x28
#define REG_CURSOR_X_POSITION1          0x29
#define REG_CURSOR_Y_POSITION0          0x2A
#define REG_CURSOR_Y_POSITION1          0x2B
#define REG_INK_CURSOR_COLOR0_0         0x2C
#define REG_INK_CURSOR_COLOR0_1         0x2D
#define REG_INK_CURSOR_COLOR1_0         0x2E
#define REG_INK_CURSOR_COLOR1_1         0x2F
#define REG_INK_CURSOR_START_ADDR       0x30
#define REG_ALTERNATE_FRM               0x31



/*
** WARNING!!! MAX_REG must be the last available register!!!
*/
#define MAX_REG                         0x31

#endif      /*  __HAL_REGS_H__ */
```

The following header file defines the structures used in the S1D13505 HAL API.

```
**==============================================================================
** HAL.H
**------------------------------------------------------------------------------
**  Created 1998, Epson Research & Development
**                Vancouver Design Center.
**  Copyright(c) Epson Research and Development Inc. 1997, 1998.  All rights
                                  reserved.
**==============================================================================
*/

#ifndef _HAL_H_
#define _HAL_H_
```

```
#pragma warning(disable:4001)   // Disable the 'single line comment' warning.


#include "hal_regs.h"

/*-----------------------------------------------------------------------*/

typedef unsigned char  BYTE;
typedef unsigned short WORD;
typedef unsigned long  DWORD;
typedef unsigned int   UINT;
typedef          int   BOOL;

#ifdef INTEL
 typedef BYTE  far *LPBYTE;
 typedef WORD  far *LPWORD;
 typedef DWORD far *LPDWORD;
#else
 typedef BYTE      *LPBYTE;
 typedef WORD      *LPWORD;
 typedef DWORD     *LPDWORD;
#endif

#ifndef LOBYTE
#define LOBYTE(w)    ((BYTE)(w))
#endif

#ifndef HIBYTE
#define HIBYTE(w)    ((BYTE)(((UINT)(w) >> 8) & 0xFF))
#endif

#ifndef LOWORD
#define LOWORD(l)    ((WORD)(DWORD)(l))
#endif

#ifndef HIWORD
#define HIWORD(l)    ((WORD)((((DWORD)(l)) >> 16) & 0xFFFF))
#endif

#ifndef MAKEWORD
#define MAKEWORD(lo, hi) ((WORD)(((WORD)(lo)) | (((WORD)(hi)) << 8)) )
#endif

#ifndef MAKELONG
#define MAKELONG(lo, hi) ((long)(((WORD)(lo)) | (((DWORD)((WORD)(hi))) << 16)))
#endif

#ifndef TRUE
```

```
#define TRUE   1
#endif

#ifndef FALSE
#define FALSE  0
#endif

#define OFF 0
#define ON  1

#ifndef NULL
#ifdef __cplusplus
#define NULL    0
#else
#define NULL    ((void *)0)
#endif
#endif

/*-----------------------------------------------------------------------*/

/*
** SIZE_VERSION  is the size of the version string (eg. "1.00")
** SIZE_STATUS   is the size of the status string (eg. "b" for beta)
** SIZE_REVISION is the size of the status revision string (eg. "00")
*/
#define SIZE_VERSION    5
#define SIZE_STATUS        2
#define SIZE_REVISION      3


#ifdef ENABLE_DPF       /* Debug_printf() */

#define DPF(exp)  printf(#exp "\n")
#define DPF1(exp) printf(#exp " = %d\n", exp)
#define DPF2(exp1, exp2) printf(#exp1 "=%d  " #exp2 "=%d\n", exp1, exp2)
#define DPFL(exp) printf(#exp " = %x\n", exp)

#else

#define DPF(exp) ((void)0)
#define DPF1(exp) ((void)0)
#define DPFL(exp) ((void)0)

#endif


/*-----------------------------------------------------------------------*/

enum
```

```
{
   ERR_OK = 0,                       /* No error, call was successful. */
   ERR_FAILED,                       /* General purpose failure.       */

   ERR_UNKNOWN_DEVICE,            /* */
   ERR_INVALID_PARAMETER,      /* Function was called with invalid parameter. */
   ERR_HAL_BAD_ARG,
   ERR_TOOMANY_DEVS,

   ERR_INVALID_STD_DEVICE
};

/*****************************************
 * Definitions for seGetId()
 *****************************************/
enum
{
   ID_UNKNOWN,
   ID_SED1355,
   ID_SED1355F0A
};

#define MAX_DEVICE      10

/*
** SE_RESERVED is for reserved device
*/
#define  SE_RESERVED    0

/*
** DetectEndian is used to determine whether the most significant
** and least significant bytes are reversed by the given compiler.
*/
#define ENDIAN       0x1234
#define REV_ENDIAN   0x3412


/*****************************************
 * Definitions for Internal calculations.
 *****************************************/

#define MIN_NON_DISP_X     32
#define MAX_NON_DISP_X     256

#define MIN_NON_DISP_Y     2
#define MAX_NON_DISP_Y     64


/*****************************************
```

```
 * Definitions for seSetFont
 ******************************************/

enum
{
   HAL_STDOUT,
   HAL_STDIN,
   HAL_DEVICE_ERR
};


#define FONT_NORMAL          0x00
#define FONT_DOUBLE_WIDTH    0x01
#define FONT_DOUBLE_HEIGHT   0x02

enum
{
   RED,
   GREEN,
   BLUE
};


/******************************************
 * Definitions for seSplitScreen()
 ******************************************/

enum
{
SCREEN1 = 1,
SCREEN2
};

/******************************************
 * Definitions for sePowerSaveMode()
 ******************************************/

#define PWR_CBR_REFRESH   0x00
#define PWR_SELF_REFRESH  0x01
#define PWR_NO_REFRESH    0x02

/*************************************************************************/

enum
{
DISP_MODE_LCD = 0,
DISP_MODE_CRT,
DISP_MODE_SIMULTANEOUS,
```

```
MAX_DISP_MODE
};


typedef struct tagHalStruct
{
   char  szIdString[16];
   WORD  wDetectEndian;
   WORD  wSize;
   WORD  wDefaultMode;

   BYTE Regs[MAX_DISP_MODE][MAX_REG + 1];

   DWORD dwClkI;           /* Input Clock Frequency (in kHz) */
   DWORD dwBusClk;         /* Bus Clock Frequency (in kHz) */
   DWORD dwRegAddr;        /* Starting address of registers */
   DWORD dwDispMem;        /* Starting address of display buffer memory */
   WORD  wPanelFrameRate;  /* Desired panel frame rate */

   WORD  wCrtFrameRate;    /* Desired CRT rate */
   WORD  wMemSpeed;        /* Memory speed in ns */
   WORD  wTrc;             /* Ras to Cas Delay in ns */
   WORD  wTrp;             /* Ras Precharge time in ns */
   WORD  wTrac;            /* Ras Access Charge time in ns */
   WORD  wHostBusWidth;    /* Host CPU bus width in bits */

} HAL_STRUCT;

typedef HAL_STRUCT * PHAL_STRUCT;

#ifdef INTEL
typedef HAL_STRUCT far * LPHAL_STRUCT;
#else
typedef HAL_STRUCT     * LPHAL_STRUCT;
#endif


/*==========================================================================*/
/*                         FUNCTION  PROTO-TYPES                            */
/*==========================================================================*/

/*---------------------------- HAL Support --------------------------------*/

int seInitHal( void );
int seGetDetectedBusWidth(int *bits);
int seRegisterDevice( const LPHAL_STRUCT lpHalInfo, int *Device );
int seGetMemSize( int seReserved1, DWORD *val );

#define CLEAR_MEM        TRUE
```

```
#define DONT_CLEAR_MEM   FALSE
int seSetDisplayMode(int device, int DisplayMode, int ClearMem);

int seSetInit(int device);

int  seGetId( int seReserved1, int *pId );
void seGetHalVersion( const char **pVersion, const char **pStatus, const char **pSta-
tusRevision );

/*---------------------------- Chip Access --------------------------------*/

int seGetReg( int seReserved1, int index, BYTE *pValue );
int seSetReg( int seReserved1, int index, BYTE value );

/*------------------------------- Misc -----------------------------------*/

int seSetBitsPerPixel( int seReserved1, UINT nBitsPerPixel );
int seGetBitsPerPixel( int seReserved1, UINT *pBitsPerPixel );

int seGetBytesPerScanline( int seReserved1, UINT *pBytes );
int seGetScreenSize( int seReserved1, UINT *width, UINT *height );
int seHWSuspend(int seReserved1, BOOL val);
int seSelectBusWidth(int seReserved1, int width);

int seDelay( int seReserved1, DWORD Seconds );

int seGetLastUsableByte( int seReserved1, DWORD *LastByte );
int seDisplayEnable(int seReserved1, BYTE NewState);

int seSplitInit( int seReserved1, DWORD wScrn1Addr, DWORD wScrn2Addr );
int seSplitScreen( int nReserved1, int WhichScreen, long VisibleScanlines );
int seVirtInit( int seReserved1, DWORD xVirt, DWORD *yVirt );
int seVirtMove( int seReserved1, int nWhichScreen, DWORD x, DWORD y );

/*-------------------------- Power Save -----------------------------------*/

int seSetPowerSaveMode( int seReserved1, int PowerSaveMode );

/*------------------------- Memory Access --------------------------------*/

int seReadDisplayByte( int seReserved1, DWORD offset, BYTE *pByte );
int seReadDisplayWord( int seReserved1, DWORD offset, WORD *pWord );
int seReadDisplayDword( int seReserved1, DWORD offset, DWORD *pDword );

int seWriteDisplayBytes( int seReserved1, DWORD addr, BYTE val, DWORD count );
int seWriteDisplayWords( int seReserved1, DWORD addr, WORD val, DWORD count );
int seWriteDisplayDwords( int seReserved1, DWORD addr, DWORD val, DWORD count );

/*------------------------------- Drawing --------------------------------*/
```

```
int seGetInkStartAddr(int seReserved1, DWORD *addr);

int seGetPixel( int seReserved1, long x, long y, DWORD *pVal );

int seSetPixel( int seReserved1, long x, long y, DWORD color );
int seDrawLine( int seReserved1, long x1, long y1, long x2, long y2, DWORD color );
int seDrawRect( int seReserved1, long x1, long y1, long x2, long y2, DWORD color,
BOOL SolidFill );
int seDrawEllipse(int seReserved1, long xc, long yc, long xr, long yr, DWORD color,
BOOL SolidFill);
int seDrawCircle( int seReserved1, long xCenter, long yCenter, long radius, DWORD
color, BOOL SolidFill );

/*------------------------------- Hardware Cursor -------------------------------*/

int seInitCursor(int seReserved1);
int seCursorOff(int seReserved1);
int seGetCursorStartAddr(int seReserved1, DWORD *addr);
int seMoveCursor(int seReserved1, long x, long y);
int seSetCursorColor(int seReserved1, int index, DWORD color);
int seSetCursorPixel( int seReserved1, long x, long y, DWORD color );
int seDrawCursorLine( int seReserved1, long x1, long y1, long x2, long y2, DWORD
color );
int seDrawCursorRect( int seReserved1, long x1, long y1, long x2, long y2, DWORD
color, BOOL SolidFill );
int seDrawCursorEllipse(int seReserved1, long xc, long yc, long xr, long yr, DWORD
color, BOOL SolidFill);
int seDrawCursorCircle( int seReserved1, long xCenter, long yCenter, long radius,
DWORD color, BOOL SolidFill );

/*------------------------------- Hardware Ink Layer ----------------------------*/

int seInitInk(int seReserved1);
int seInkOff(int seReserved1);
int seGetInkStartAddr(int seReserved1, DWORD *addr);
int seSetInkColor(int seReserved1, int index, DWORD color);
int seSetInkPixel( int seReserved1, long x, long y, DWORD color );
int seDrawInkLine( int seReserved1, long x1, long y1, long x2, long y2, DWORD color
);
int seDrawInkRect( int seReserved1, long x1, long y1, long x2, long y2, DWORD color,
BOOL SolidFill );
int seDrawInkEllipse(int seReserved1, long xc, long yc, long xr, long yr, DWORD
color, BOOL SolidFill);
int seDrawInkCircle( int seReserved1, long xCenter, long yCenter, long radius, DWORD
color, BOOL SolidFill );

/*------------------------------- Color -----------------------------------*/

int seSetLut( int seReserved1, BYTE *pLut, int count );
int seGetLut( int seReserved1, BYTE *pLut, int count );
```

```
int seSetLutEntry( int seReserved1, int index, BYTE *pEntry );
int seGetLutEntry( int seReserved1, int index, BYTE *pEntry );

/*---------------------------- C Like Support -------------------------------*/

int seDrawText( int seReserved1, char *fmt, ... );
int sePutChar( int seReserved1, int ch );
int seGetChar( void );

/*---------------------------- XLIB Support ---------------------------------*/

int seGetLinearDispAddr(int seReserved1, DWORD *pDispLogicalAddr);
int InitLinear(int seReserved1);

#endif      /* _HAL_H_ */
```

Appendix A Supported Panel Values

A.1 Supported Panel Values

The following tables show related register data for different panels. All the examples are based on 8 bpp and 2M bytes of 50 ns EDO-DRAM.

Note

The following settings may not reflect the ideal settings for your system configuration. Power, speed, and cost requirements may dictate different starting parameters for your system (e.g. 320x240@78Hz using 12MHz clock).

Table 12-1: Passive Single Panel @ 320x240 with 40MHz Pixel Clock

Register	**Mono 4-Bit** 320X240@60Hz	**Mono 4-Bit EL** 320X240@60Hz	**Color 8-Bit** 320X240@60Hz	**Color 8-Bit Format 2** 320X240@60Hz	Notes
REG[02h]	0000 0000	1000 0000	0001 0100	0001 1100	set panel type
REG[03h]	0000 0000	0000 0000	0000 0000	0000 0000	set MOD rate
REG[04h]	0010 0111	0010 0111	0010 0111	0010 0111	set horizontal display width
REG[05h]	0001 0111	0001 0111	0001 0111	0001 0111	set horizontal non-display period
REG[08h]	1110 1111	1110 1111	1110 1111	1110 1111	set vertical display height bits 7-0
REG[09h]	0000 0000	0000 0000	0000 0000	0000 0000	set vertical display height bits 9-8
REG[0Ah]	0011 1110	0011 1110	0011 1110	0011 1110	set vertical non-display period
REG[0Dh]	0000 1101	0000 1101	0000 1101	0000 1101	set 8 bpp and LCD enable
REG[19h]	0000 0011	0000 0011	0000 0011	0000 0011	set MCLK and PCLK divide
REG[1Bh]	0000 0001	0000 0001	0000 0001	0000 0001	disable half frame buffer
REG[24h]	0000 0000	0000 0000	0000 0000	0000 0000	set Look-Up Table address to 0
REG[26h]	load LUT	load LUT	load LUT	load LUT	load Look-Up Table

Table 12-2: Passive Single Panel @ 640x480 with 40MHz Pixel Clock

Register	**Mono 8-Bit** 640X480@60Hz	**Color 8-Bit** 640X480@60Hz	Color 16-Bit 640X480@60Hz	Notes
REG[02h]	0001 0000	0001 0100	0010 0100	set panel type
REG[03h]	0000 0000	0000 0000	0000 0000	set MOD rate
REG[04h]	0100 1111	0100 1111	0100 1111	set horizontal display width
REG[05h]	0000 0011	0000 0011	0000 0011	set horizontal non-display period
REG[08h]	1101 1111	1101 1111	1101 1111	set vertical display height bits 7-0
REG[09h]	0000 0001	0000 0001	0000 0001	set vertical display height bits 9-8
REG[0Ah]	0000 0010	0000 0010	0000 0010	set vertical non-display period
REG[0Dh]	0000 1101	0000 1101	0000 1101	set 8 bpp and LCD enable
REG[19h]	0000 0001	0000 0001	0000 0001	set MCLK and PCLK divide
REG[1Bh]	0000 0001	0000 0001	0000 0001	disable half frame buffer
REG[24h]	0000 0000	0000 0000	0000 0000	set Look-Up Table address to 0
REG[26h]	load LUT	load LUT	load LUT	load Look-Up Table

Table 12-3: Passive Dual Panel @ 640x480 with 40MHz Pixel Clock

Register	**Mono 4-Bit EL** 640X480@60Hz	**Mono 8-Bit** 640X480@60Hz	Color 8-Bit 640X480@60Hz	Color 16-Bit 640X480@60Hz	Notes
REG[02h]	1000 0010	0001 0010	0001 0110	0010 0110	set panel type
REG[03h]	0000 0000	0000 0000	0000 0000	0000 0000	set MOD rate
REG[04h]	0100 1111	0100 1111	0100 1111	0100 1111	set horizontal display width
REG[05h]	0000 0101	0000 0101	0000 0101	0000 0101	set horizontal non-display period
REG[08h]	1110 1111	1110 1111	1110 1111	1110 1111	set vertical display height bits 7-0
REG[09h]	0000 0000	0000 0000	0000 0000	0000 0000	set vertical display height bits 9-8
REG[0Ah]	0011 1110	0011 1110	0011 1110	0011 1110	set vertical non-display period
REG[0Dh]	0000 1101	0000 1101	0000 1101	0000 1101	set 8 bpp and LCD enable
REG[19h]	0000 0010	0000 0010	0000 0010	0000 0010	set MCLK and PCLK divide
REG[1Bh]	0000 0000	0000 0000	0000 0000	0000 0000	enable half frame buffer
REG[24h]	0000 0000	0000 0000	0000 0000	0000 0000	set Look-Up Table address to 0
REG[26h]	load LUT	load LUT	load LUT	load LUT	load Look-Up Table

Table 12-4: TFT Single Panel @ 640x480 with 25.175 MHz Pixel Clock

Register	Color 16-Bit 640X480@60Hz	Notes
REG[02h]	0010 0101	set panel type
REG[03h]	0000 0000	set MOD rate
REG[04h]	0100 1111	set horizontal display width
REG[05h]	0001 0011	set horizontal non-display period
REG[06h]	0000 0001	set HSYNC start position
REG[07h]	0000 1011	set HSYNC polarity and pulse width
REG[08h]	1101 1111	set vertical display height bits 7-0
REG[09h]	0000 0001	set vertical display height bits 9-8
REG[0Ah]	0010 1011	set vertical non-display period
REG[0Bh]	0000 1001	set VSYNC start position
REG[0Ch]	0000 0001	set VSYNC polarity and pulse width
REG[0Dh]	0000 1101	set 8 bpp and LCD enable
REG[19h]	0000 0000	set MCLK and PCLK divide
REG[1Bh]	0000 0001	disable half frame buffer
REG[24h]	0000 0000	set Look-Up Table address to 0
REG[26h]	load LUT	load Look-Up Table

REG[00h] Revision Code Register [1] (For S1D13505: Product Code=000011b, Revision Code=00b) RO

Product Code						Revision Code	
Bit 5	Bit 4	Bit 3	Bit 2	Bit 1	Bit 0	Bit 1	Bit 0

REG[01h] Memory Configuration Register 1/0 RW

n/a [2]	Refresh Rate [3]			n/a	WE# Control	n/a	Memory Type
	Bit 2	Bit 1	Bit 0				

REG[02h] Panel Type Register 1/0 RW

EL Panel Enable	n/a	Panel Data Width [4]		Panel Data Format Slct	Color/Mono Panel Slct	Dual/Single Panel Slct	TFT/Passive LCD Pan Slct
		Bit 1	Bit 0				

REG[03h] Mod Rate Register RW

n/a	n/a	MOD Rate					
		Bit 5	Bit 4	Bit 3	Bit 2	Bit 1	Bit 0

REG[04h] Horizontal Display Width Register RW

n/a	Horizontal Display Width = 8(REG + 1)						
	Bit 6	Bit 5	Bit 4	Bit 3	Bit 2	Bit 1	Bit 0

REG[05h] Horizontal Non-Display Period Register RW

n/a	n/a	n/a	Horizontal Non-Display Period = 8(REG + 1)				
			Bit 4	Bit 3	Bit 2	Bit 1	Bit 0

REG[06h] HRTC/FPLINE Start Position Register RW

n/a	n/a	n/a	HRTC/FPLINE Start Position = 8(REG + 1) - 2				
			Bit 4	Bit 3	Bit 2	Bit 1	Bit 0

REG[07h] HRTC/FPLINE Pulse Width Register RW

HRTC Polarity Slct	FPLINE Polarity Slct	n/a	n/a	HRTC/FPLINE Pulse Width = 8(REG + 1)			
				Bit 3	Bit 2	Bit 1	Bit 0

REG[08h] Vertical Display Height Register 0 RW

Vertical Display Height = (REG + 1)							
Bit 7	Bit 6	Bit 5	Bit 4	Bit 3	Bit 2	Bit 1	Bit 0

REG[09h] Vertical Display Height Register 1 RW

n/a	n/a	n/a	n/a	n/a	n/a	Vertical Display Height	
						Bit 9	Bit 8

REG[0Ah] Vertical Non-Display Period Register RW

VNDP Status (RO)	n/a	Vertical Non-Display Period (VNDP) = (REG + 1)					
		Bit 5	Bit 4	Bit 3	Bit 2	Bit 1	Bit 0

REG[0Bh] VRTC/FPFRAME Start Position Register RW

n/a	n/a	VRTC/FPFRAME Start Position = (REG + 1)					
		Bit 5	Bit 4	Bit 3	Bit 2	Bit 1	Bit 0

REG[0Ch] VRTC/FPFRAME Pulse Width Register RW

VRTC Polarity Slct	FPFRAME Polarity Slct	n/a	n/a	n/a	VRTC/FPFRAME Pulse Width = (REG + 1)		
					Bit 2	Bit 1	Bit 0

REG[0Dh] Display Mode Register RW

Hardware Portrait Mode Enable	Simultaneous Display [5] Option Select		Bit-per-pixel Select [6]			CRT Enable	LCD Enable
	Bit 1	Bit 0	Bit 2	Bit 1	Bit 0		

REG[0Eh] Screen 1 Line Compare Register 0 RW

Screen 1 Line Compare							
Bit 7	Bit 6	Bit 5	Bit 4	Bit 3	Bit 2	Bit 1	Bit 0

REG[0Fh] Screen 1 Line Compare Register 1 RW

n/a	n/a	n/a	n/a	n/a	n/a	Screen 1 Line Compare	
						Bit 9	Bit 8

REG[10h] Screen 1 Display Start Address Register 0 RW

Screen 1 Start Address							
Bit 7	Bit 6	Bit 5	Bit 4	Bit 3	Bit 2	Bit 1	Bit 0

REG[11h] Screen 1 Display Start Address Register 1 RW

Screen 1 Start Address							
Bit 15	Bit 14	Bit 13	Bit 12	Bit 11	Bit 10	Bit 9	Bit 8

REG[12h] Screen 1 Display Start Address Register 2 RW

n/a	n/a	n/a	n/a	Screen 1 Start Address			
				Bit 19	Bit 18	Bit 17	Bit 16

REG[13h] Screen 2 Display Start Address Register 0 RW

Screen 2 Start Address							
Bit 7	Bit 6	Bit 5	Bit 4	Bit 3	Bit 2	Bit 1	Bit 0

REG[14h] Screen 2 Display Start Address Register 1 RW

Screen 2 Start Address							
Bit 15	Bit 14	Bit 13	Bit 12	Bit 11	Bit 10	Bit 9	Bit 8

REG[15h] Screen 2 Display Start Address Register 2 RW

n/a	n/a	n/a	n/a	Screen 2 Start Address			
				Bit 19	Bit 18	Bit 17	Bit 16

REG[16h] Memory Address Offset Register 0 RW

Memory Address Offset							
Bit 7	Bit 6	Bit 5	Bit 4	Bit 3	Bit 2	Bit 1	Bit 0

REG[17h] Memory Address Offset Register 1 RW

n/a	n/a	n/a	n/a	n/a	Memory Address Offset		
					Bit 10	Bit 9	Bit 8

REG[18h] Pixel Panning Register RW

Screen 2 Pixel Panning				Screen 1 Pixel Panning			
Bit 3	Bit 2	Bit 1	Bit 0	Bit 3	Bit 2	Bit 1	Bit 0

REG[19h] Clock Configuration Register RW

Reserved	n/a	n/a	n/a	n/a	MCLK Divide Slct	PCLK Divide [7] Slct	
						Bit 1	Bit 0

REG[1Ah] Power Save Configuration Register RW

Power Save Status RO	n/a	n/a	n/a	LCD Power Disable	Suspend Refresh Select [8]		Software Suspend En
					Bit 1	Bit 0	

REG[1Bh] Miscellanious Register RW

Host Interface Disable	n/a	n/a	n/a	n/a	n/a	n/a	Half Frame Buffer Disable

REG[1Ch] MD Configuration Readback Register 0 RO

MD7 Status	MD6 Status	MD5 Status	MD4 Status	MD3 Status	MD2 Status	MD1 Status	MD0 Status

REG[1Dh] MD Configuration Readback Register 1 RO

MD15 Status	MD14 Status	MD13 Status	MD12 Status	MD11 Status	MD10 Status	MD9 Status	MD8 Status

REG[1Eh] General IO Pins Configuration Register 0 RW

n/a	n/a	n/a	n/a	GPIO3 Pin IO Config	GPIO2 Pin IO Config	GPIO1 Pin IO Config	n/a

REG[1Fh] General IO Pins Configuration Register 1 RW

n/a	n/a	n/a	n/a	n/a	n/a	n/a	n/a

REG[20h] General IO Pins Control Register 0 RW

n/a	n/a	n/a	n/a	GPIO3 Pin IO Status	GPIO2 Pin IO Status	GPIO1 Pin IO Status	n/a

REG[21h] General IO Pins Control Register 1 RW

GPO Control	n/a	n/a	n/a	n/a	n/a	n/a	n/a

REG[22h] Performance Enhancement Register 0 RW

Reserved	RC Timing Value [9]		RAS#-to-CAS# Delay [10]	RAS# Precharge [11] Timing		Reserved	Reserved
	Bit 1	Bit 0		Bit 1	Bit 0		

REG[23h] Performance Enhancement Register 1 RW

Display FIFO Disable	CPU to Memory Wait State		Display FIFO Threshold				
	Bit 1	Bit 0	Bit 4	Bit 3	Bit 2	Bit 1	Bit 0

REG[24h] Look-Up Table Address Register RW

Look-Up Table Address							
Bit 7	Bit 6	Bit 5	Bit 4	Bit 3	Bit 2	Bit 1	Bit 0

REG[26h] Look-Up Table Data Register RW

Look-Up Table Data				n/a	n/a	n/a	n/a
Bit 3	Bit 2	Bit 1	Bit 0				

REG[27h] Ink/Cursor Control Register RW

Ink/Cursor Mode		n/a	n/a	Cursor High Threshold			
Bit 1	Bit 0			Bit 3	Bit 2	Bit 1	Bit 0

REG[28h] Cursor X Position Register 0 RW

Cursor X Position							
Bit 7	Bit 6	Bit 5	Bit 4	Bit 3	Bit 2	Bit 1	Bit 0

REG[29h] Cursor X Position Register 1 RW

Reserved	n/a	n/a	n/a	n/a	n/a	Cursor X Position	
						Bit 9	Bit 8

REG[2Ah] Cursor Y Position Register 0 RW

Cursor Y Position							
Bit 7	Bit 6	Bit 5	Bit 4	Bit 3	Bit 2	Bit 1	Bit 0

REG[2Bh] Cursor Y Position Register 1 RW

Reserved	n/a	n/a	n/a	n/a	n/a	Cursor Y Position	
						Bit 9	Bit 8

REG[2Ch] Ink/Cursor Color 0 Register 0 RW

Cursor Color 0							
Bit 7	Bit 6	Bit 5	Bit 4	Bit 3	Bit 2	Bit 1	Bit 0

REG[2Dh] Ink/Cursor Color 0 Register 1 RW

Cursor Color 0							
Bit 15	Bit 14	Bit 13	Bit 12	Bit 11	Bit 10	Bit 9	Bit 8

REG[2Eh] Ink/Cursor Color 1 Register 0 RW

Cursor Color 1							
Bit 7	Bit 6	Bit 5	Bit 4	Bit 3	Bit 2	Bit 1	Bit 0

REG[2Fh] Ink/Cursor Color 1 Register 1 RW

Cursor Color 1							
Bit 15	Bit 14	Bit 13	Bit 12	Bit 11	Bit 10	Bit 9	Bit 8

REG[30h] Ink/Cursor Start Address Select Register RW

Ink/Cursor Start Address Select [12]							
Bit 7 WO	Bit 6	Bit 5	Bit 4	Bit 3	Bit 2	Bit 1	Bit 0

REG[31h] Alternate FRM Register RW

Alternate Frame Range Modulation Select							
Bit 7	Bit 6	Bit 5	Bit 4	Bit 3	Bit 2	Bit 1	Bit 0

Notes

1 These bits are used to identify the S1D13505. For the S1D13505 the product code should be 3. The host interface must be enabled before reading this register (set REG[1B] b7=0).

2 N/A bits should be written 0.
Reserved bits must be written 0.

3 DRAM Refresh Rate Select

DRAM Refresh Rate Select Bits [2:0]	CLKI Frequency Divisor	Example Refresh Rate for CLKI = 33MHz	Example period for 256 refresh cycles at CLKI = 33MHz
000	64	520 kHz	0.5 ms
001	128	260 kHz	1 ms
010	256	130 kHz	2 ms
011	512	65 kHz	4 ms
100	1024	33 kHz	8 ms
101	2048	16 kHz	16 ms
110	4096	8 kHz	32 ms
111	8192	4 kHz	64 ms

4 Panel Data Width Selection

Panel Data Width Bits [1:0]	Passive LCD Panel Data Width Size	TFT Panel Data Width Size
00	4-bit	9-bit
01	8-bit	12-bit
10	16-bit	16-bit
11	Reserved	Reserved

5 Simultaneous Display Option Selection

Simultaneous Display Option Select Bits [1:0]	Simultaneous Display Mode
00	Normal
01	Line Doubling
10	Interlace
11	Even Scan Only

6 Number of Bits-Per-Pixel Selection

Bit-Per-Pixel Select Bits [2:0]	Color Depth (Bit-Per-Pixel)
000	1 bpp
001	2 bpp
010	4 bpp
011	8 bpp
100	15 bpp
101	16 bpp
110-111	Reserved

7 PCLK Divide Selection

PCLK Divide Select Bits [1:0]	MCLK: PCLK Frequency Ratio
00	1: 1
01	2: 1
10	3: 1
11	4: 1

8 Suspend Refresh Selection

Suspend Refresh Select Bits [1:0]	DRAM Refresh Type
00	CAS-before-RAS (CBR) Refresh
01	Self-Refresh
1x	No Refresh

9 Minimum Memory Timing Selection

REG[22h] Bits [6:5]	N_{RC}	Minimum Random Cycle Width (t_{RC})
00	5	5
01	4	4
10	3	3
11	Reserved	Reserved

10 RAS#-to-CAS# Delay Timing Select

REG[22h] Bit 4	N_{RCD}	RAS#-to-CAS# Delay (t_{RCD})
0	2	2
1	1	1

11 RAS Precharge Timing Select

REG[22h] Bits [3:2]	N_{RP}	RAS Precharge Width (t_{RP})
00	2	2
01	1.5	1.5
10	1	1
11	Reserved	Reserved

12 Ink/Cursor Start Address Encoding

Ink/Cursor Start Address Bits [7:0]	Start Address (Bytes)
0	Display Buffer Size – 1024
n = 255...1	Display Buffer Size – (n x 8192)

EPSON®

S1D13505 Embedded RAMDAC LCD/CRT Controller

13505CFG Configuration Program

Document Number: X23A-B-001-04

Copyright © 1998, 2001 Epson Research and Development, Inc. All Rights Reserved.

Information in this document is subject to change without notice. You may download and use this document, but only for your own use in evaluating Seiko Epson/EPSON products. You may not modify the document. Epson Research and Development, Inc. disclaims any representation that the contents of this document are accurate or current. The Programs/Technologies described in this document may contain material protected under U.S. and/or International Patent laws.

EPSON is a registered trademark of Seiko Epson Corporation. Microsoft and Windows are registered trademarks of Microsoft Corporation. All other trademarks are the property of their respective owners.

THIS PAGE LEFT BLANK

Table of Contents

13505CFG 5
S1D13505 Supported Evaluation Platforms 5
Installation 6
Usage 6
13505CFG Configuration Tabs 7
General Tab 7
Preferences Tab 9
Memory Tab 10
Clocks Tab 12
Panel Tab 15
CRT/TV Tab 19
Registers Tab 20
13505CFG Menus 21
Open... 21
Save 22
Save As... 22
Configure Multiple 23
Export 24
Enable Tooltips 25
ERD on the Web 25
About 13505CFG 25
Comments 25

THIS PAGE LEFT BLANK

13505CFG

13505CFG is an interactive Windows® 9x/ME/NT/2000 program that calculates register values for a user defined S1D13505 configuration. The configuration information can be used to directly alter the operating characteristics of the S1D13505 utilities or any program built with the Hardware Abstraction Layer (HAL) library. Alternatively, the configuration information can be saved in a variety of text file formats for use in other applications.

S1D13505 Supported Evaluation Platforms

13505CFG runs on PC systems running Windows 9x/ME/NT/2000 and can modify the executable files based on the S1D13505 HAL for the following evaluation platforms:

- PC system with an Intel 80x86 processor.
- M68EC000IDP (Integrated Development Platform) board, revision 3.0, with a Motorola M68EC000 processor.
- MC68030IDP (Integrated Development Platform) board, revision 3.0, with a Motorola MC68030 processor.
- SH3-LCEVB board, revision B, with an Hitachi SH-3 HD6417780 processor.
- MPC821ADS (Applications Development System) board, revision B, with a Motorola MPC821 processor.

Installation

Create a directory for **13505cfg.exe** and the S1D13505 utilities. Copy the files **13505cfg.exe** and **panels.def** to that directory. **Panels.def** contains configuration information for a number of panels and must reside in the same directory as **13505cfg.exe**.

Usage

13505CFG can be started from the Windows desktop or from a Windows command prompt.

To start 13505CFG from the Windows desktop, double click the program icon or the link icon if one was created during installation.

To start 13505CFG from a Windows command prompt, change to the directory **13505cfg.exe** was installed to and type the command **13505cfg**.

The basic procedure for using 13505CFG is:

1. Start 13505CFG as described above.
2. Open an existing file to serve as a starting reference point (this step is optional).
3. Modify the configuration. For specific information on editing the configuration, see “13505CFG Configuration Tabs” on page 7.
4. Save the new configuration. The configuration information can be saved in two ways; as an ASCII text file or by modifying the executable image on disk.

   Several ASCII text file formats are supported. Most are formatted C header files used to build display drivers or standalone applications.

   Utility files based on the Hardware Abstraction Layer (HAL) can be modified directly by 13505CFG.

13505CFG Configuration Tabs

13505CFG provides a series of tabs which can be selected at the top of the main window. Each tab allows the configuration of a specific aspect of S1D13505 operation.

The tabs are labeled “General”, “Preference”, “Memory”, “Clocks”, “Panel”, “CRT”, and “Registers”. The following sections describe the purpose and use of each of the tabs.

General Tab

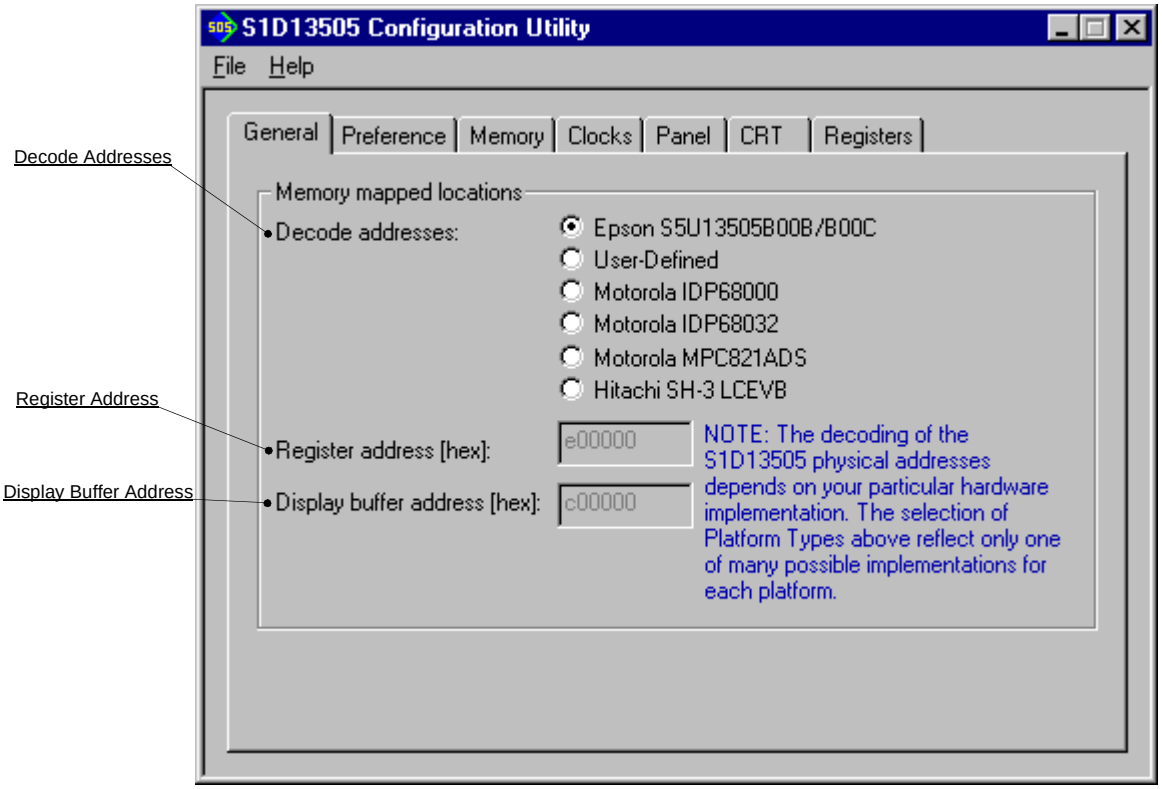

The General tab contains S1D13505 evaluation board specific information. The values presented are used for configuring HAL based executable utilities. The settings on this tab specify where in CPU address space the registers and display buffer are located.

Decode Addresses

Selecting one of the listed evaluation platforms changes the values for the “Register address” and “Display buffer address” fields. The values used for each evaluation platform are examples of possible implementations as used by the Epson S1D13505 evaluation boards. If your hardware implementation differs from the addresses used, select the User-Defined option and enter the correct addresses for “Register address” and “Display buffer address”.

Register Address	The physical address of the start of register decode space (in hexadecimal). This field is automatically set according to the Decode Address unless the “User-Defined” decode address is selected.
Display Buffer Address	The physical address of the start of display buffer decode space (in hexadecimal). This field is automatically set according to the Decode Address unless the “User-Defined” decode address is selected.

Preferences Tab

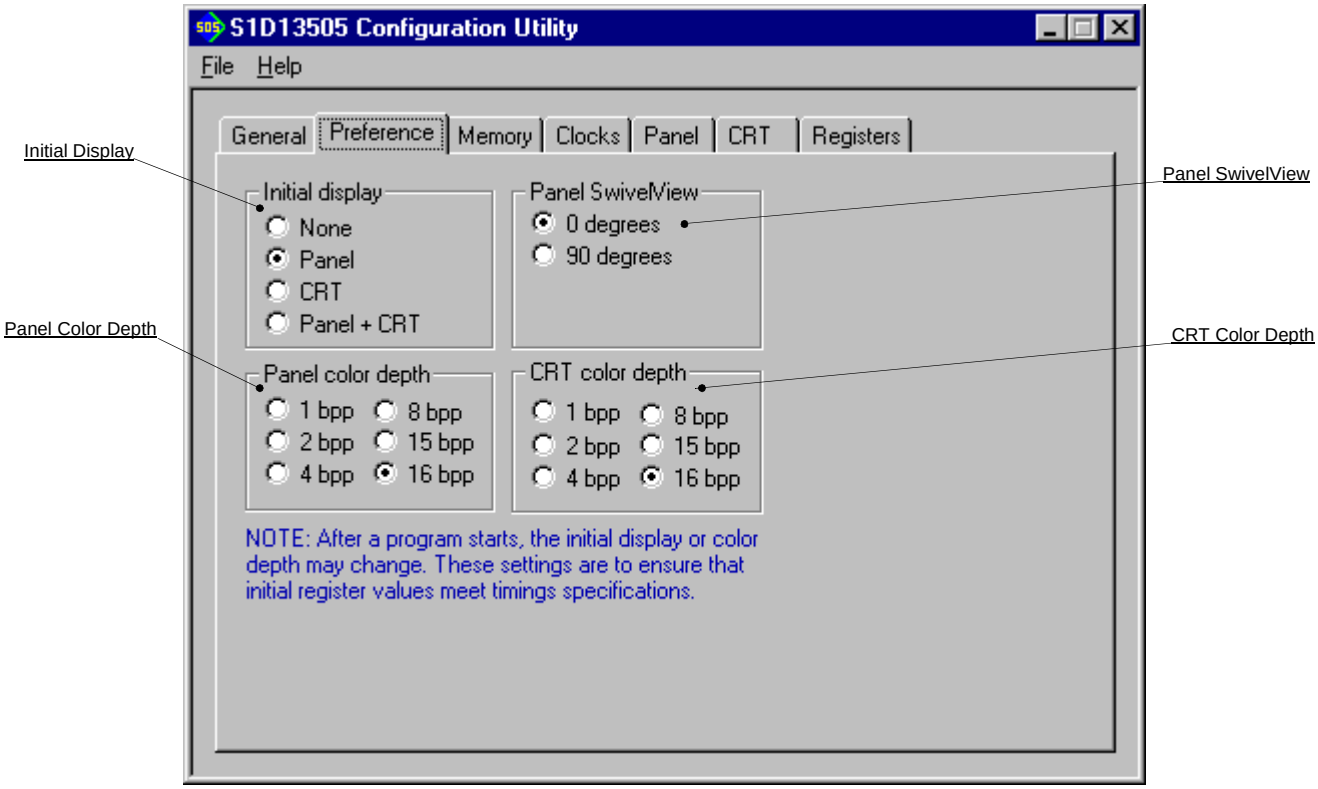

The Preference tab contains settings pertaining to the initial display state. During runtime the display or color depth may be changed.

Initial Display	Sets which display device is used for the initial display. Selections made on the CRT tab may cause selections on this tab to be grayed out. The selections “None” and “Panel” are always available.
Panel SwivelView	The S1D13505 SwivelView feature is capable of rotating the image displayed on an LCD panel 90° in a clockwise direction. This sets the initial orientation of the panel. This setting is greyed out when any display device other than “Panel” is selected as the Initial Display.
Panel Color Depth	Sets the initial color depth on the LCD panel.
CRT Color Depth	Sets the initial color depth on the CRT display.

Memory Tab

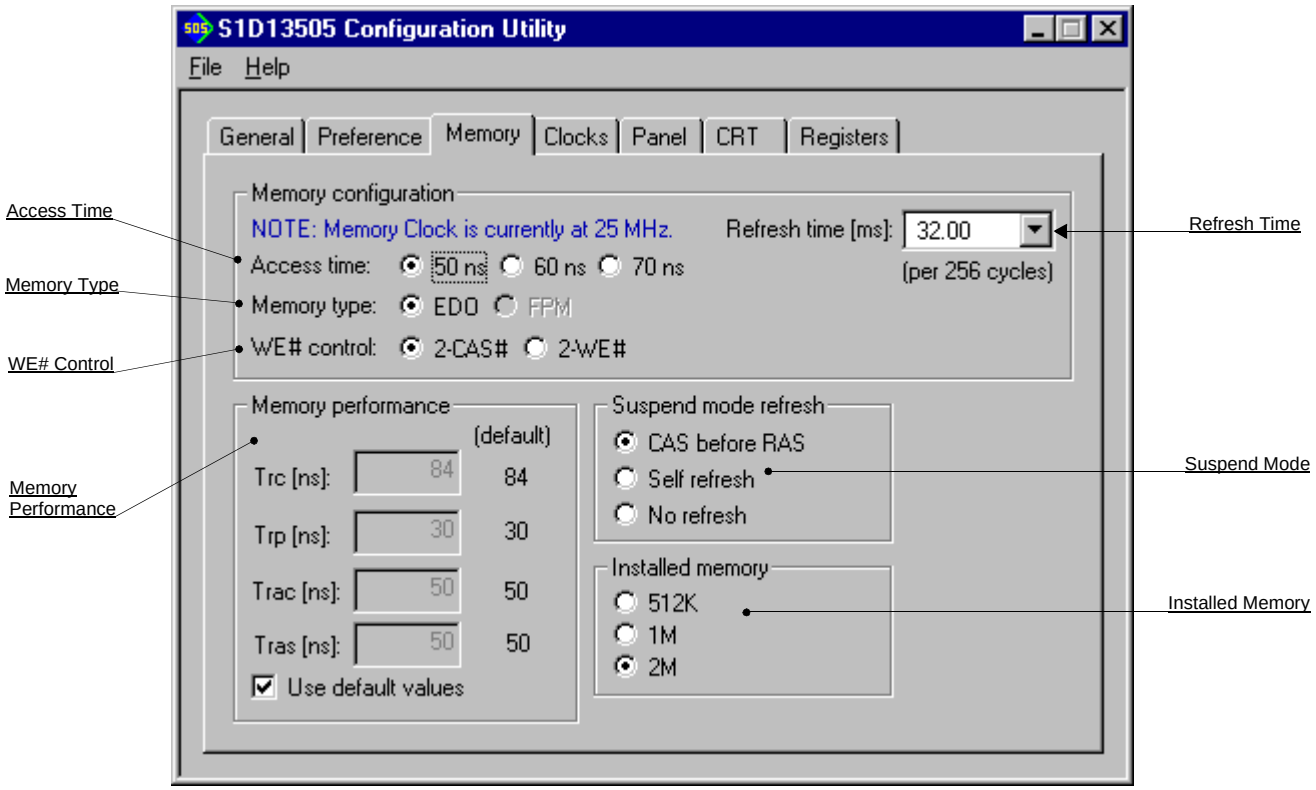

The Memory tab contains settings that control the configuration of the DRAM used for the S1D13505 display buffer.

Note

The DRAM memory type and access time determines the optimal memory clock (MCLK). See *"Clocks Tab"* on page 12 for an explanation on how to determine the optimal memory clock.

Memory Configuration — These four settings must be configured based on the specification of the DRAM being used. For each of the following settings refer to the DRAM manufacturer's specification unless otherwise noted.

Access Time — Selects the access time of the DRAM.

The S1D13505 evaluation boards use 50ns DRAM.

Memory Type — Selects the memory type, either Extended Data Out (EDO) or Fast Page Mode (FPM).

The S1D13505 evaluation boards use EDO DRAM.

WE# Control	Selects the WE# control used for the DRAM. DRAM uses one of two methods of control when writing to memory. These methods are referred to as 2-CAS# and 2-WE#. The S5U13505 evaluation boards use DRAM requiring the 2-CAS# method.
Refresh Time	This value represents the number of ms required to refresh 256 rows of DRAM.
Memory Performance	These settings optimize the memory timings for best performance. The default values change based on the memory configuration (access time, memory type, etc.). For further information on configuring these settings, refer to the *S1D13505 Hardware Functional Specification*, document number X23A-A-001-xx and the DRAM manufacturer's specification.
Suspend Mode Refresh	Selects the DRAM refresh method used during power save mode. The S5U13505 evaluation boards use DRAM requiring Self Refresh. For all other implementations, refer to the manufacturer's specification for DRAM refresh requirements.
CAS before RAS	Select this setting for DRAM that requires timing where the CAS signal occurs before the RAS signal for low power memory refresh.
Self refresh	Select this setting for DRAM that requires no signal from the S1D13505 to maintain memory refresh.
No refresh	This selection does not refresh the memory during power save mode. If this option is selected, the memory contents are lost during power save.
Installed Memory	Selects the amount of DRAM available for the display buffer. The S1D13505 evaluation boards have 2M bytes of DRAM installed.

Clocks Tab

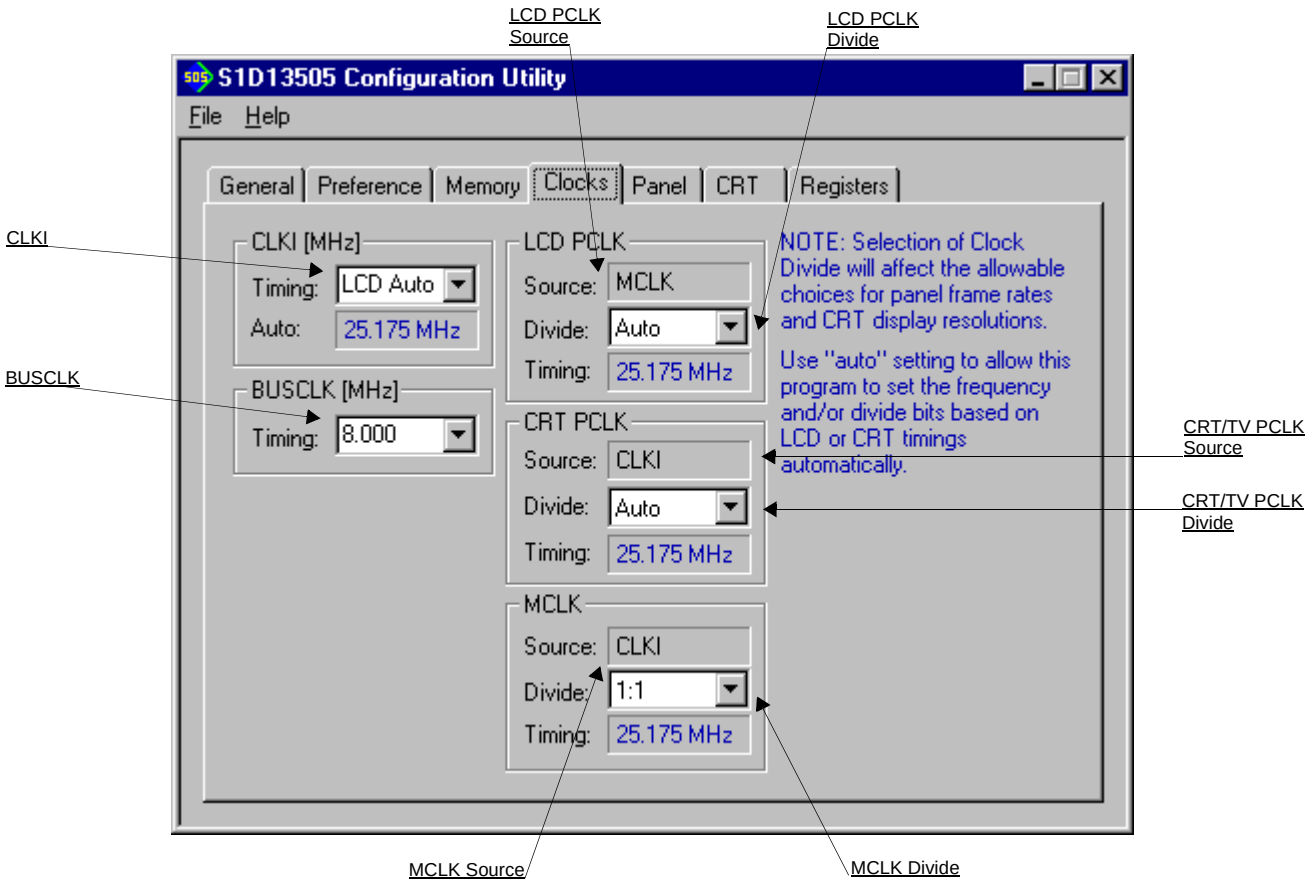

The Clocks tab is intended to simplify the selection of input clock frequencies and the source of internal clocking signals. For further information regarding clocking and clock sources, refer to the *S1D13505 Hardware Functional Specification*, document number X23A-A-001-xx.

In automatic mode the values are calculated based on either the LCD or CRT tab settings. In this mode, the required frequencies for the input clocks are displayed in blue in the “Auto” section of each group. It is the responsibility of the system designer to ensure that the correct CLKI frequencies are supplied to the S1D13505.

Making a selection other than “Auto” indicates that the value for CLKI is known and is fixed by the system design. Options for LCD and CRT frame rates are limited to ranges determined by the clock values.

Note

Changing clock values may modify or invalidate Panel or CRT settings. Confirm all settings on these two tabs after changing any clock settings.

The S1D13505 may use as many as three input clocks or as few as one. The more clocks used the greater the flexibility of choice in display type and memory speed.

CLKI

This setting determines the frequency of CLKI. CLKI is the source clock for all of the S1D13505 internal clocks.

Select “LCD Auto” or “CRT Auto” to have the CLKI frequency determined automatically based on settings made on the Panels or CRT configuration tabs. After completing the other configurations, the required CLKI frequency will be displayed in blue in the Auto section.

If the CLKI frequency must be fixed to a particular rate, set this value by selecting a preset frequency from the drop down list or entering the desired frequency in MHz.

BUSCLK

This setting determines the frequency of the bus interface clock (BUSCLK).

The BUSCLK frequency must be specified. Set this value by selecting a preset frequency from the drop down list or entering the desired frequency in MHz.

LCD PCLK

These settings select the signal source and input clock divisor for the panel pixel clock (LCD PCLK).

Source

The LCD PCLK source is MCLK.

Divide

Specifies the divide ratio of MCLK to derive the LCD PCLK.

Selecting “Auto” for the divisor allows the configuration program to calculate the best clock divisor. Unless a very specific clocking is being specified, it is best to leave this setting on “Auto”.

Timing

This field shows the actual LCD PCLK frequency used by the configuration process calculations.

CRT PCLK	These settings select the signal source and input clock divisor for the CRT pixel clock (CRT PCLK).
Source	The CRT PCLK source is CLKI.
Divide	Specifies the divide ratio of CLKI to derive the CRT PCLK. Selecting “Auto” for the divisor allows the configuration program to calculate the best clock divisor. Unless a very specific clocking is required, it is best to leave this setting on “Auto”.
Timing	This field shows the actual CRT PCLK frequency used by the configuration process calculations.
MCLK	These settings select the signal source and input clock divisor for the memory clock (MCLK).
Source	The MCLK source is CLKI.
Divide	Specifies the divide ratio of CLKI to derive MCLK. Leave this setting at 1:1 ratio unless MCLK is greater than 40MHz.
Timing	This field shows the actual MCLK frequency used by the configuration process calculations.

Panel Tab

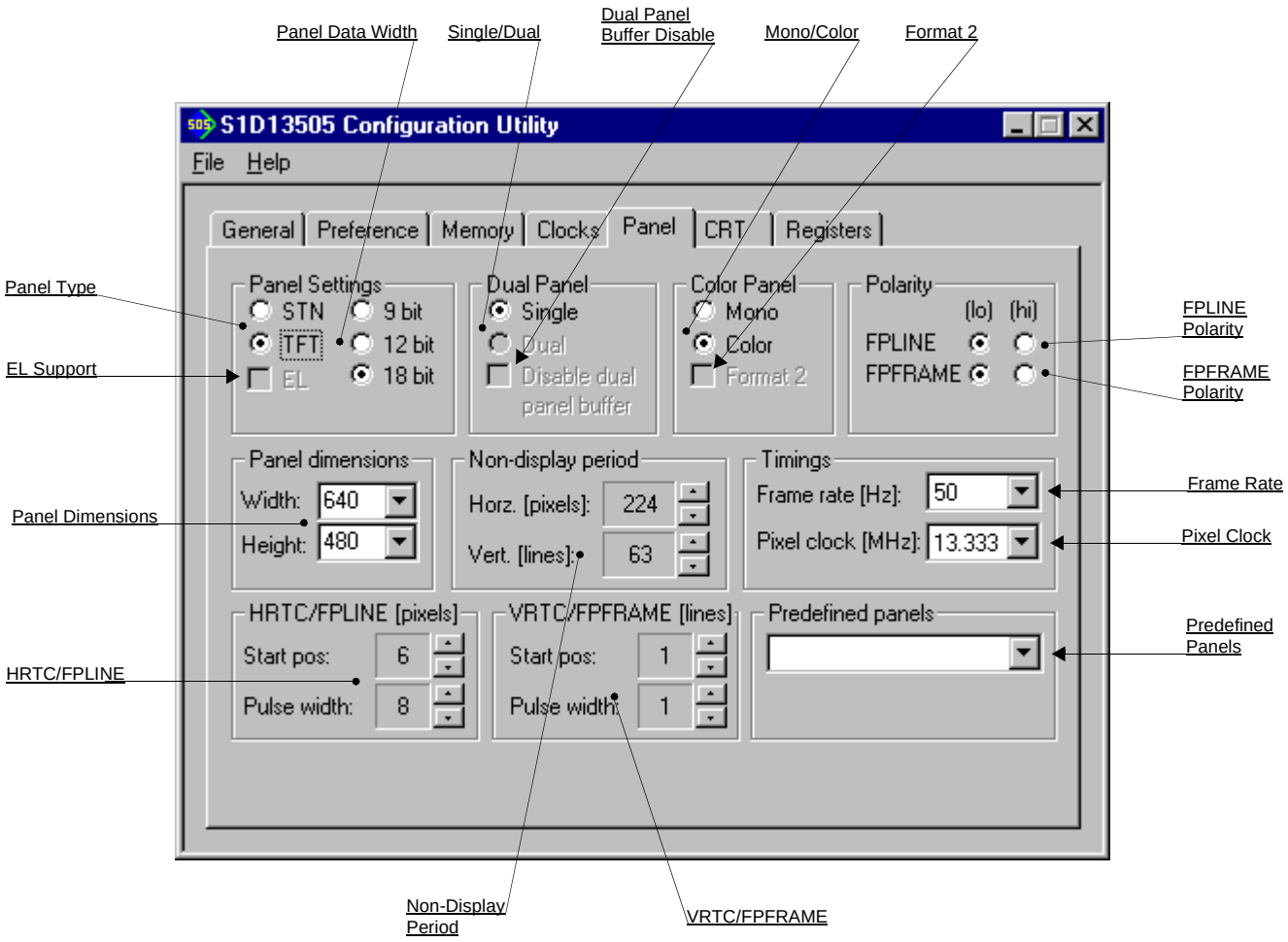

The S1D13505 supports many panel types. This tab allows configuration of most panel settings such as panel dimensions, type and timings.

Panel Type	Selects between passive (STN) and active (TFT) panel types. Several options may change or become unavailable when the STN/TFT setting is switched. Therefore, confirm all settings on this tab after the Panel Type is changed.
EL Support	Enable Electro-Luminescent panel support. This option is only available when the selected panel type is STN.

Panel Data Width	Selects the panel data width. Panel data width is the number of bits of data transferred to the LCD panel on each clock cycle and shouldn't be confused with color depth which determines the number of displayed colors. When the panel type is STN, the available options are 4 bit, 8 bit, and 16 bit. When the panel type is TFT the available options are 9 bit, 12 bit, and 18 bit.
Single / Dual	Selects between a single or dual panel. When the panel type is TFT, "Single" is automatically selected and the "Dual" option is grayed out.
Disable Dual Panel Buffer	The Dual Panel Buffer is used with dual STN panels to improve image quality by buffering display data in a format directly usable by the panel. This option is primarily intended for testing purposes. It is not recommended that the Dual Panel Buffer be disabled as a reduction of display quality results.
Mono / Color	Selects between a monochrome or color panel.
Format 2	Selects color STN panel format 2. This option is specifically for configuring 8-bit color STN panels. See the *S1D13505 Hardware Functional Specification*, document number X23A-A-001-xx, for description of format 1 / format 2 data formats. Most new panels use the format 2 data format.
FPLINE Polarity	Selects the polarity of the FPLINE pulse. Refer to the panel specification for the correct polarity of the FPLINE pulse.
FPFRAME Polarity	Selects the polarity of the FPFRAME pulse. Refer to the panel specification for the correct polarity of the FPFRAME pulse.

Panel Dimensions	These fields specify the panel width and height. A number of common widths and heights are available in the selection boxes. If the width/height of your panel is not listed, enter the actual panel dimensions into the edit field. Manually entered panel widths must be a multiple of 16 pixels for passive (STN) panels and 8 pixels for TFT panels. If a manually entered panel width does not meet the above restrictions a notification box appears and 13505CFG rounds up the value to the next allowable width.
Non-display period	It is recommended that these automatically generated non-display values be used without adjustment. However, manual adjustment may be required to fine tune the non-display width and the non-display height. As a general rule passive LCD panels and some CRTs are tolerant of a wide range of non-display times. Active panels and some CRTs are far less tolerant of changes to the non-display period.
Frame Rate	Select the desired frame rate (in Hz) from the drop-down list. The values in the list are the range of possible frame rates using the currently selected pixel clock. To change the range of frame rates, select a different Pixel Clock rate (in MHz). Panel dimensions are fixed, therefore frame rate can only be adjusted by changing either PCLK or non-display period values. Higher frame rates correspond to smaller horizontal and vertical non-display values, or higher frequencies.
Pixel Clock	Select the desired Pixel Clock (in MHz) from the drop-down list. The range of frequencies displayed is dependent on settings selected on the Clocks tab.

HRTC/FPLINE (pixels)	These settings allow fine tuning the TFT line pulse parameters and are only available when the selected panel type is TFT. Refer to *S1D13505 Hardware Functional Specification*, document number X23A-A-001-xx for a complete description of the FPLINE pulse settings.
Start pos	Specifies the delay (in pixels) from the start of the horizontal non-display period to the leading edge of the FPLINE pulse.
Pulse Width	Specifies the pulse width (in pixels) of the FPLINE output signal.
VRTC/FPFRAME (lines)	These settings allow fine tuning the TFT frame pulse parameters and are only available when the selected panel type is TFT. Refer to *S1D13505 Hardware Functional Specification*, document number X23A-A-001-xx, for a complete description of the FPFRAME pulse settings.
Start pos	Specify the delay (in lines) from the start of the vertical non-display period to the leading edge of the FPFRAME pulse.
Pulse width	Specifies the pulse width (in lines) of the FPFRAME output signal.
Predefined Panels	13505CFG uses a file (**panels.def**) which lists various panel manufacturers recommended settings. If the file **panels.def** is present in the same directory as **13505cfg.exe**, the settings for a number of predefined panels are available in the drop-down list. If a panel is selected from the list, 13505CFG loads the predefined settings contained in the file.

CRT/TV Tab

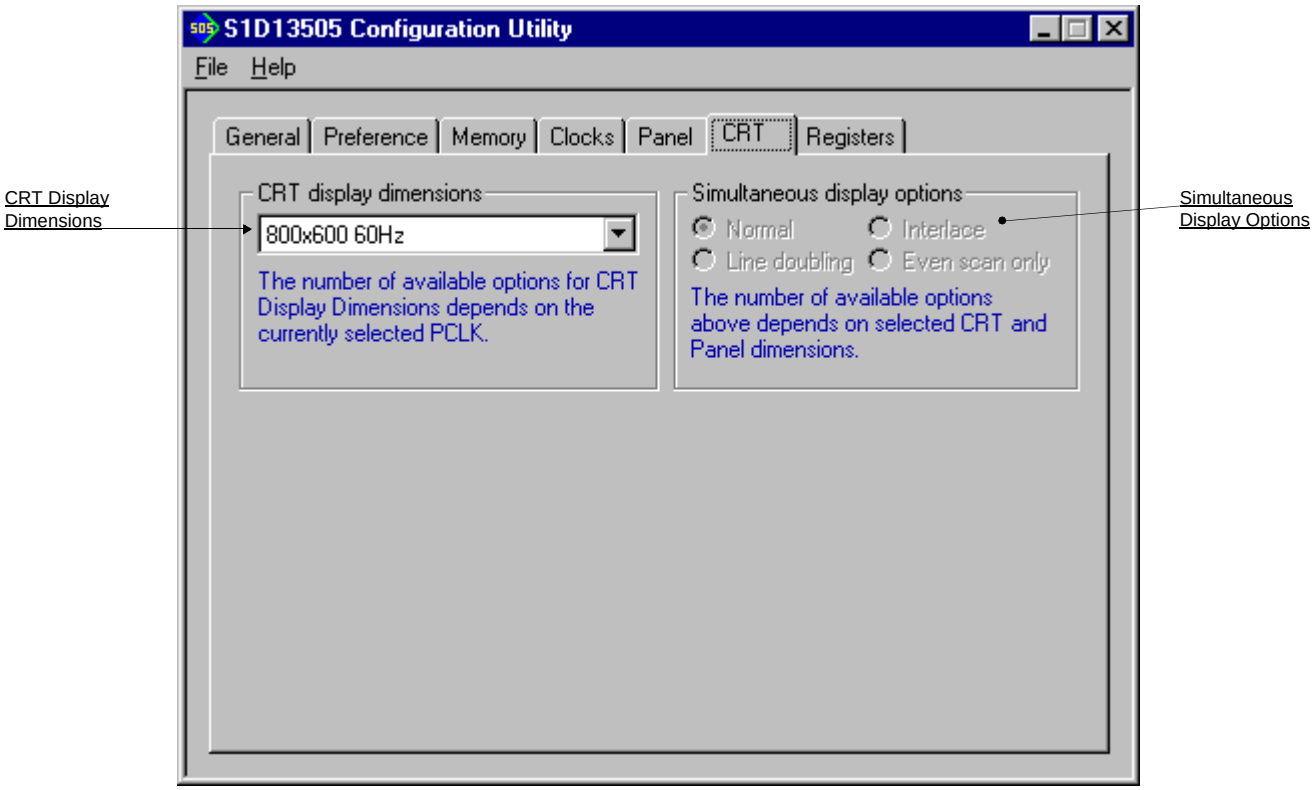

The CRT tab configures settings specific to the CRT display device.

CRT Display Dimensions	Select the CRT resolution and frame rate from the drop-down list. The available options vary based on selections made in the Clocks tab. If no selections are available, the CRT pixel clock settings on the Clocks tab must be changed.
Simultaneous Display Options	When both the LCD and CRT are operating in simultaneous display mode, a method of displaying both images must be selected based on the vertical resolution (height) of the images. If both displays are the same resolution, select “Normal”. Otherwise, refer to the *S1D13505 Hardware Functional Specification*, document number X23A-A-001-xx for information on selecting the best option.

Note

For CRT operations, 13505CFG supports VESA timings only. Overriding these register values on the Registers page may cause the CRT to display incorrectly.

Registers Tab

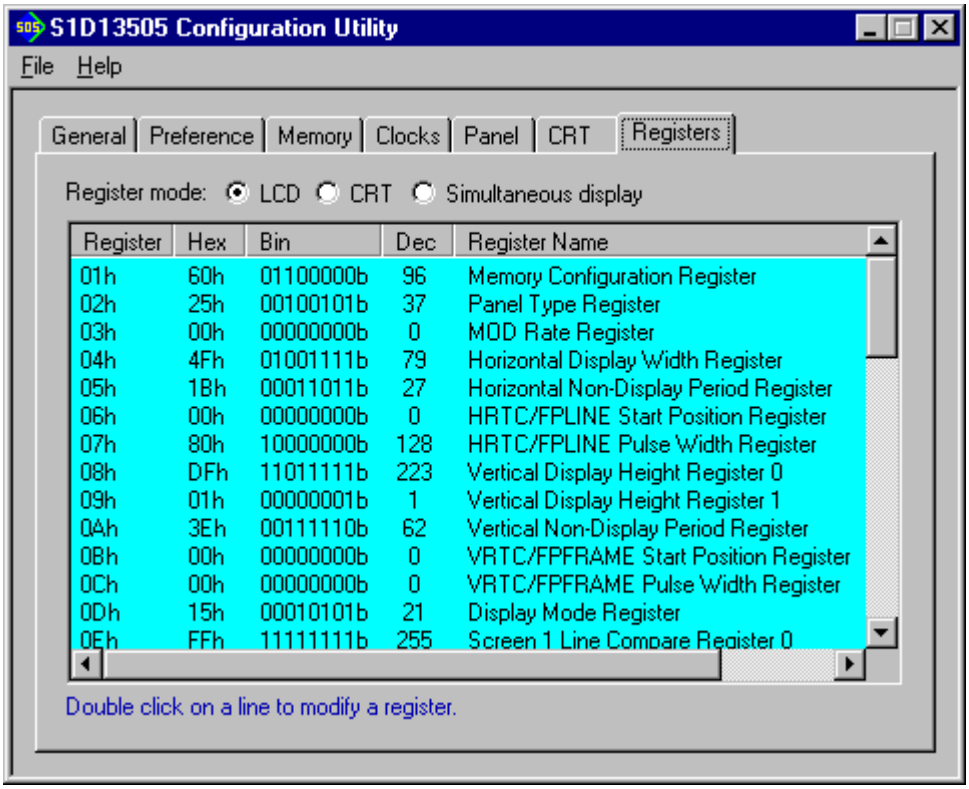

The Registers tab allows viewing and direct editing the S1D13505 register values.

Scroll up and down the list of registers and view their configured value. Individual register settings may be changed by double-clicking on the register in the listing. **Manual changes to the registers are not checked for errors, so caution is warranted when directly editing these values.** It is strongly recommended that the *S1D13505 Hardware Functional Specification*, document number X23A-A-001-xx be referred to before making an manual register settings.

Manually entered values may be changed by 13505CFG if further configuration changes are made on the other tabs. In this case, the user is notified of the changes when they return to the registers tab.

Note

Manual changes to the registers may have unpredictable results if incorrect values are entered.

13505CFG Menus

The following sections describe each of the options in the File and Help menus.

Open...

From the Menu Bar, select “File”, then “Open...” to display the Open File Dialog Box.

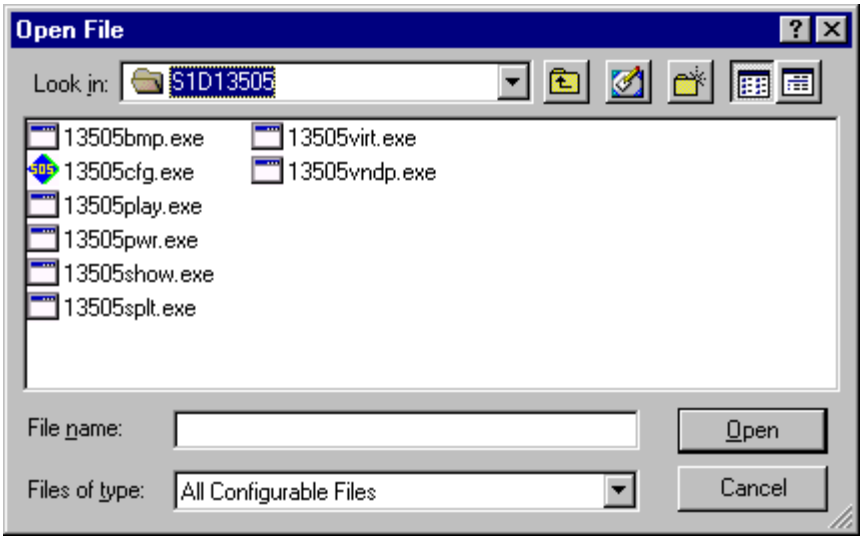

The Open option allows 13505CFG to open files containing HAL configuration information. When 13505CFG opens a file it scans the file for an identification string, and if found, reads the configuration information. This may be used to quickly arrive at a starting point for register configuration. The only requirement is that the file being opened must contain a valid S1D13505 HAL library information block.

13505CFG supports a variety of executable file formats. Select the file type(s) 13505CFG should display in the Files of Type drop-down list and then select the filename from the list and click on the Open button.

Note

13505CFG is designed to work with utilities programmed using a given version of the HAL. If the configuration structure contained in the executable file differs from the version 13505CFG expects the Open will fail and an error message is displayed. This may happen if the version of 13505CFG is substantially older, or newer, than the file being opened.

Save

From the Menu Bar, select “File”, then “Save” to initiate the save action. The Save menu option allows a fast save of the configuration information to a file that was opened with the Open menu option.

Note

This option is only available once a file has been opened.

Note

13505cfg.exe can be configured by making a copy of the file 13505cfg.exe and configuring the copy. It is not possible to configure the original while it is running.

Save As...

From the Menu Bar, select “File”, then “Save As...” to display the Save As Dialog Box.

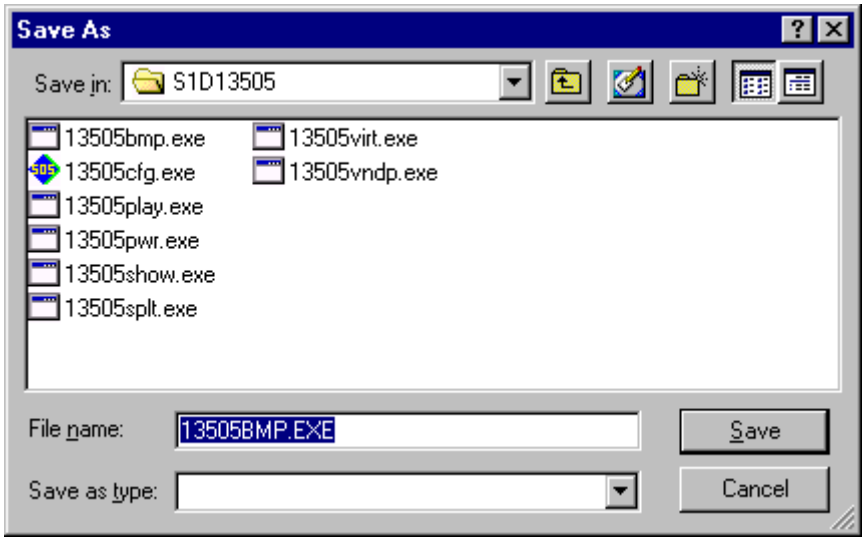

“Save as” is very similar to Save except a dialog box is displayed allowing the user to name the file before saving.

Using this technique a tester can configure a number of files differing only in configuration information and name (e.g. BMP60Hz.EXE, BMP72Hz.EXE, BMP75Hz.EXE where only the frame rate changes in each of these files).

Note

When “Save As” is selected then an exact duplicate of the file as opened by the “Open” option is created containing the new configuration information.

Configure Multiple

After determining the desired configuration, “Configure Multiple” allows the information to be saved into one or more executable files built with the HAL library.

From the Menu Bar, select “File”, then “Configure Multiple” to display the Configure Multiple Dialog Box.This dialog box is also displayed when a file(s) is dragged onto the 13505CFG window.

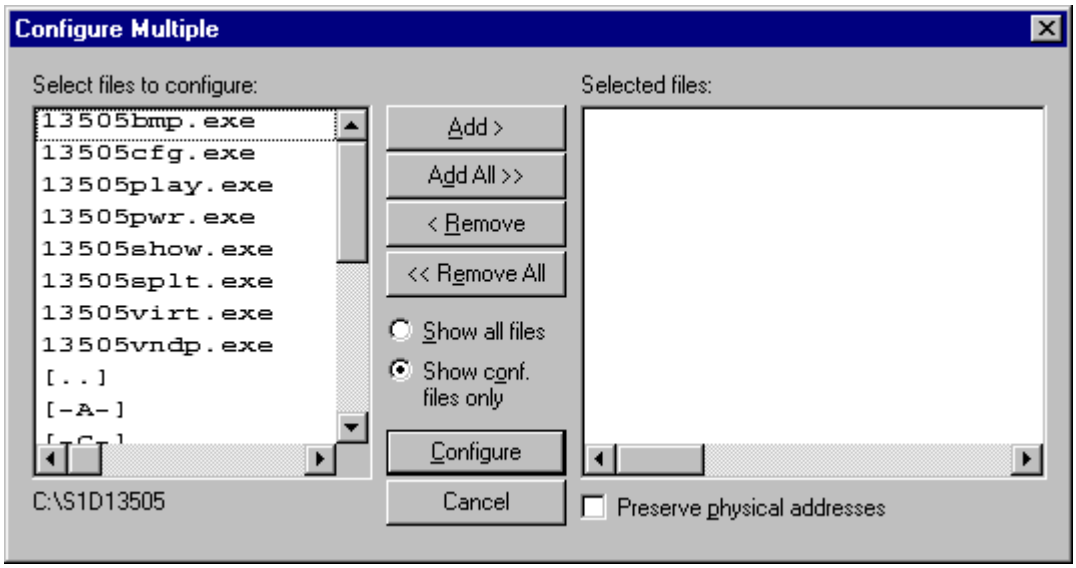

The left pane lists files available for configuration; the right pane lists files that have been selected for configuration. Files can be selected by clicking the “Add” or “Add All” buttons, double clicking any file in the left pane, or by dragging the file(s) from Windows Explorer.

Selecting “Show all files” displays all files in the selected directory, whereas selecting “Show conf. files only” will display only files that can be configured using 13505CFG.

The configuration values can be saved to a specific EXE file for Intel platforms, or to a specific S9 or ELF file for non-Intel platforms. The file must have been compiled using the 13505 HAL library.

Checking “Preserve Physical Addresses” instructs 13505CFG to use the register and display buffer address values the files were previously configured with. Addresses specified in the General Tab are discarded. This is useful when configuring several programs for various hardware platforms at the same time. For example, if configuring ISA, MPC and IDP based programs at the same time for a new panel type, the physical addresses for each are retained. This feature is primarily intended for the test lab where multiple hardware configurations exist and are being tested.

Export

After determining the desired configuration, “Export” permits the user to save the register information as a variety of ASCII text file formats. The following is a list and description of the currently supported output formats:

- a C header file for use in writing HAL library based applications.
- a C header file which lists each register and the value it should be set to.
- a C header file for use in developing Window CE display drivers.
- a C header file for use in developing display drivers for other operating systems such as Linux, QNX, and VxWorks UGL or WindML.
- a comma delimited text file containing an offset, a value, and a description for each S1D13505 register.

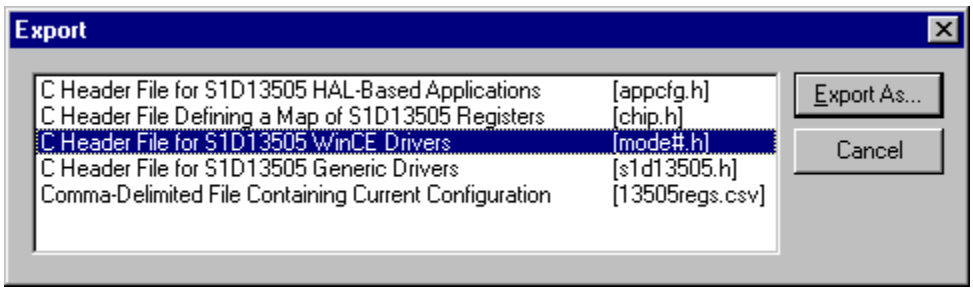

After selecting the file format, click the “Export As..." button to display the file dialog box which allows the user to enter a filename before saving. Before saving the configuration file, clicking the “Preview” button starts Notepad with a copy of the configuration file about to be saved.

When the **C Header File for S1D13505 WinCE Drivers** option is selected as the export type, additional options are available and can be selected by clicking on the Options button. The options dialog appears as:

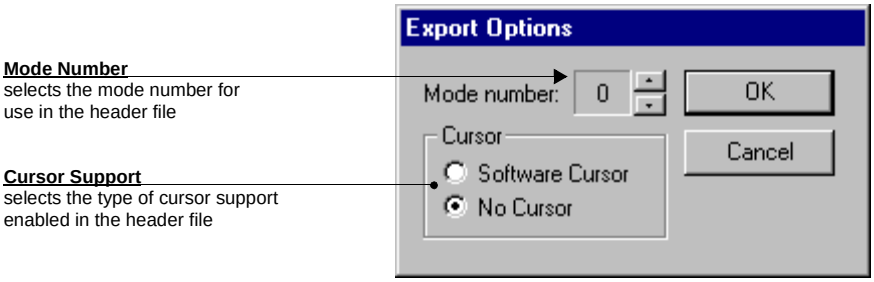

Enable Tooltips

Tooltips provide useful information about many of the items on the configuration tabs. Placing the mouse pointer over nearly any item on any tab generates a popup window containing helpful advice and hints.

To enable/disable tooltips check/uncheck the “Tooltips” option form the “Help” menu.

Note

Tooltips are enabled by default.

ERD on the Web

This “Help” menu item is actually a hotlink to the Epson Research and Development website. Selecting “Help” then “ERD on the Web” starts the default web browser and points it to the ERD product web site.

The latest software, drivers, and documentation for the S1D13505 is available at this website.

About 13505CFG

Selecting the “About 13505CFG” option from the “Help” menu displays the about dialog box for 13505CFG. The about dialog box contains version information and the copyright notice for 13505CFG.

Comments

- On any tab particular options may be grayed out if selecting them would violate the operational specification of the S1D13505 (i.e. Selecting extremely low CLKI frequencies on the Clocks tab may result in no possible CRT options. Selecting TFT or STN on the Panel tab enables/disables options specific to the panel type).
- The file **panels.def** is a text file containing operational specifications for several supported, and tested, panels. This file can be edited with any text editor.
- 13505CFG allows manually altering register values. The manual changes may violate memory and LCD timings as specified in the *S1D13505 Hardware Functional Specification*, document number X23A-A-001-xx. If this is done, unpredictable results may occur. Epson Research and Development, Inc. does not assume liability for any damage done to the display device as a result of configuration errors.

THIS PAGE LEFT BLANK

EPSON®

S1D13505 Embedded RAMDAC LCD/CRT Controller

13505SHOW Demonstration Program

Document Number: X23A-B-002-05

Copyright © 2001 Epson Research and Development, Inc. All Rights Reserved.

Information in this document is subject to change without notice. You may download and use this document, but only for your own use in evaluating Seiko Epson/EPSON products. You may not modify the document. Epson Research and Development, Inc. disclaims any representation that the contents of this document are accurate or current. The Programs/Technologies described in this document may contain material protected under U.S. and/or International Patent laws.
EPSON is a registered trademark of Seiko Epson Corporation. All other trademarks are the property of their respective owners.

THIS PAGE LEFT BLANK

13505SHOW

13505SHOW is designed to demonstrate and test some of the S1D13505 display capabilities. The program can cycle through all the color depths and display a pattern showing all available colors, or the user can specify a color depth and display configuration.

The 13505SHOW demonstration program must be configured and/or compiled to work with your hardware platform. The program 13505CFG.EXE can be used to configure 13505SHOW. Consult the 13505CFG users guide, document number X23A-B-001-xx, for more information on configuring S1D13505 utilities.

This software is designed to work in both embedded and personal computer (PC) environments. For the embedded environment, it is assumed that the system has a means of downloading software from the PC to the target platform. Typically this is done by serial communications, where the PC uses a terminal program to send control commands and information to the target processor. Alternatively, the PC can program an EPROM, which is then placed in the target platform. Some target platforms can also communicate with the PC via a parallel port connection, or an Ethernet connection.

S1D13505 Supported Evaluation Platforms

13505SHOW supports the following S1D13505 evaluation platforms:

- PC system with an Intel 80x86 processor.
- M68332BCC (Business Card Computer) board, revision B, with a Motorola MC68332 processor.
- M68EC000IDP (Integrated Development Platform) board, revision 3.0, with a Motorola M68EC000 processor.
- SH3-LCEVB board, revision B, with an Hitachi SH-3 HD6417780 processor.

Installation

PC platform: copy the file 13505SHOW.EXE to a directory that is in the DOS path on your hard drive.

Embedded platform: download the program 13505SHOW to the system.

Usage

PC platform: at the prompt, type

`13505show [b=??] [/a] [/crt] [/g] [/lcd] [/noinit] [/p] [/read] [/s] [/?]`.

Embedded platform: execute **`13505show`** and at the prompt, type the command line argument.

Where:	`b=??`	starts 13505SHOW at a user specified bit-per-pixel (bpp) level, where ?? can be: 1, 2, 4, 8, 15, or 16
	`/a`	automatically cycles through all video modes
	`/crt`	displays the image on the CRT
	`/g`	shows grid on the image
	`/lcd`	displays the image on the LCD panel
	`/noinit`	bypasses register initialization
	`/p`	draws the image in portrait mode
	`/read`	after drawing the image, continually read from the screen (for testing purposes)
	`/s`	displays vertical stripe pattern
	`/?`	displays the help screen

Note

Pressing the ESC key will exit the program.

13505SHOW Examples

The 13505SHOW demonstration program is designed to both demonstrate and test some of the features of the S1D13505. Some examples follow showing how to use the program in both instances.

Using 13505SHOW For Demonstration

1. To show color patterns which must be manually stepped through all bit-per-pixel modes, type the following:

   13505SHOW

   The program will display 16 bit-per-pixel mode. Press any key to go to the next screen. The program will display 15 bit-per-pixel mode. Once all screens are shown the program exits. To exit the program immediately press ESC.

2. To show color patterns which automatically step through all bit-per-pixel modes, type the following:

   13505SHOW /a

   The program will display 16 bit-per-pixel mode. Each screen is shown for approximately 1 second, then the next screen is automatically shown. The program exits after the last screen is shown. To exit the program immediately press CTRL+BREAK.

3. To show a color pattern for a specific bit-per-pixel mode, type the following:
   13505SHOW b=[mode]
   where mode = 1, 2, 4, 8, 15, or 16.

   The program will display the requested screen and then exit.

4. To show the color patterns in portrait mode, type the following:
   13505SHOW /p

   The program will display 16 bit-per-pixel mode. Press any key to go to the next screen. The program will next display 15 bit-per-pixel mode and then 8 bit-per-pixel mode. Since portrait mode is limited to 8, 15, and 16 bit-per-pixel mode the program exits. To exit the program immediately press ESC.

   The “/p” switch can be used in combination with other command line switches.

5. To show solid vertical stripes, type the following:
   13505SHOW /s

   The program will display 16 bit-per-pixel mode. Press any key to go to the next screen. The program will display 15 bit-per-pixel mode. Once all screens are shown the program exits. To exit the program immediately press ESC.

   The “/s” switch can be used in combination with other command line switches.

Using 13505SHOW For Testing

1. To show a test grid over the color pattern, type the following:
   13505SHOW b=8 /g

   The program will display the 8 bit-per-pixel color pattern overlaid with a one pixel wide white grid and then exit. The grid makes it obvious if the image is shifted or if pixels are missing. Note the grid is not aligned with the color pattern, therefore the color boxes will not match the grid boxes.

   The “/g” switch can be used in combination with other command line switches.

2. To test background memory reads, type the following:
   13505SHOW b=16 /read

   The program will test screen reads. If there is a problem with memory access, the displayed pattern will appear different than when the “/read” switch is not used. If there is a problem, check the configuration parameters of 13505SHOW using the utility 13505CFG. See the 13505CFG user guide, document number X23A-B-001-xx, for more information.

   The “/read” switch should be used in combination with the “b=” setting, otherwise the test will always start with the 16 bit-per-pixel screen. To exit the program after using “/read”, press ESC and wait for a couple of seconds (the keystroke is checked after reading a full screen).

Comments

- 13505SHOW cannot show a greater color depth than the display allows.
- Portrait mode is available only for 8, 15, and 16 bit-per-pixel.
- When using a PC with the S5U13505 evaluation board, the PC must not have more than 12M bytes of system memory.
- 13505SHOW uses the panel color setup to determine whether to display a mono or color image on both the panel and the CRT. When editing in 13505CFG with CRT enabled and panel disabled, select “Color” from the “Panel” dialog box if you want the CRT to show color.
- For simultaneous display, select both “/lcd” and “/crt”.
- If the “b=” option is not used, 13505SHOW will cycle through all available bit-per-pixel modes.

Program Messages

`ERROR: Could not initialize device.`

These messages generally mean that the given hardware/software setup violates the timing limitations described in the 13505 Hardware Functional Specification, document number X23A-A-001-xx.

`ERROR: Unknown command line argument.`

An invalid command line argument was entered. Refer to the help screen or documentation for valid command line arguments.

`ERROR: Too many devices registered.`

There are too many display devices attached to the HAL. The HAL currently supports only one device.

`ERROR: Could not register S1D13505 device.`

A 13505 device was not found at the configured addresses. Check the configuration address using the 13505CFG configuration program.

`ERROR: Did not find a 13505 device.`

The HAL was unable to read the revision code register on the S1D13505. Ensure that the S1D13505 hardware is installed and that the hardware platform has been set up correctly.

`ERROR: Continual screen read will not work with the /a switch.`

The continual screen read function reads one screen indefinitely, so it is not possible to automatically cycle through the video modes.

`WARNING: b= option used with /noinit, so bit-per-pixel and display memory will NOT be changed.`

The b= option requests that registers be changed for a given bit-per-pixel mode, while the /noinit option requests the opposite. To resolve this contradiction 13505SHOW will not change either the registers or the display memory. Consequently “13505SHOW b=?? /noinit” is only useful for continually reading the display memory.

`UNSUPPORTED MODE: Cannot show ?? bpp in portrait mode.`

Only 8, 15, 16 bit-per-pixel modes are supported in portrait mode.

`ERROR: Could not change to ?? bit-per-pixel.`

The HAL library detected that the requested bit-per-pixel mode will violate the hardware specifications for clocks. To reprogram the clocks, run 13505CFG and select the desired bit-per-pixel mode.

THIS PAGE LEFT BLANK

EPSON®

S1D13505 Embedded RAMDAC LCD/CRT Controller

13505SPLT Display Utility

Document Number: X23A-B-003-03

Copyright © 2001 Epson Research and Development, Inc. All Rights Reserved.

Information in this document is subject to change without notice. You may download and use this document, but only for your own use in evaluating Seiko Epson/EPSON products. You may not modify the document. Epson Research and Development, Inc. disclaims any representation that the contents of this document are accurate or current. The Programs/Technologies described in this document may contain material protected under U.S. and/or International Patent laws.
EPSON is a registered trademark of Seiko Epson Corporation. All other trademarks are the property of their respective owners.

THIS PAGE LEFT BLANK

13505SPLT

13505SPLT demonstrates S1D13505 split screen capability by showing two different areas of display memory on the screen simultaneously. Screen 1 shows horizontal bars and Screen 2 shows vertical bars.

Screen 1 memory is located at the start of the display buffer. Screen 2 memory is located immediately after Screen 1 in the display buffer. On user input, or elapsed time, the line compare register value is changed to adjust the amount of area displayed on either screen. The result is a movement up or down of screen 2 on the display.

The 13505SPLT display utility must be configured and/or compiled to work with your hardware platform. The program 13505CFG.EXE can be used to configure 13505SPLT. Consult the 13505CFG users guide, document number X23A-B-001-xx, for more information on configuring S1D13505 utilities.

This software is designed to work in both embedded and personal computer (PC) environments. For the embedded environment, it is assumed that the system has a means of downloading software from the PC to the target platform. Typically, this is done by serial communications. The PC uses a terminal program to send control commands and information to the target processor. Alternatively, the PC can program an EPROM, which is then placed in the target platform. Some target platforms can also communicate with the PC via a parallel port connection, or an Ethernet connection.

S1D13505 Supported Evaluation Platforms

13505SPLT supports the following S1D13505 evaluation platforms:

- PC system with an Intel 80x86 processor.
- M68332BCC (Business Card Computer) board, revision B, with a Motorola MC68332 processor.
- M68EC000IDP (Integrated Development Platform) board, revision 3.0, with a Motorola M68EC000 processor.
- SH3-LCEVB board, revision B, with an Hitachi SH-3 HD6417780 processor.

Installation

PC platform: copy the file 13505SPLT.EXE to a directory that is in the DOS path on your hard drive.

Embedded platform: download the program 13505SPLT to the system.

Usage

PC platform: at the prompt, type **`13505splt [/a] [/?]`**.

Embedded platform: execute **`13505splt`** and at the prompt, type the command line argument.

Where:	`no argument`	enables manual split screen operation
	`/a`	enables automatic split screen operation
	`/?`	displays the help screen

The following keyboard commands are for navigation within the program.

Manual mode:	↑	moves Screen 2 up one line
	↓	moves Screen 2 down one line
	`CTRL-`↑	moves Screen 2 up several lines
	`CTRL-`↓	moves Screen 2 down several lines
	`HOME`	Screen 2 moved up as high as possible
	`END`	Screen 2 moved down as low as possible

Automatic and Manual modes:

`b`	changes the color depth (bit-per-pixel)
`ESC`	exits 13505SPLT

13505SPLT Example

1. Type “13505splt /a” to automatically move the split screen.
2. Press "b" to change the bit-per-pixel value from 16 to 15 bit-per-pixel.
3. Repeat step 2 for the remaining bit-per-pixel color depths: 8, 4, 2, and 1.
4. Press <ESC> to exit the program.

Comments

- When using a PC with the S5U13505 evaluation board, the PC must not have more than 12M bytes of system memory.

Program Messages

`ERROR: Did not find a 13505 device.`

The HAL was unable to read the revision code register on the S1D13505. Ensure that the S1D13505 hardware is installed and that the hardware platform has been set up correctly.

`ERROR: Too many devices registered.`

There are too many display devices attached to the HAL. The HAL currently supports only one device.

`ERROR: Could not register S1D13505FOA device.`

A S1D13505 device was not found at the configured addresses. Check the configuration address using the 13505CFG configuration program.

`ERROR: Could not set ?? bit-per-pixel display mode.`

This message generally means that the given hardware/software setup violates the timing limitations described in the S1D13505 Hardware Functional Specification, document number X23A-A-001-xx.

THIS PAGE LEFT BLANK

EPSON®

S1D13505 Embedded RAMDAC LCD/CRT Controller

13505VIRT Display Utility

Document Number: X23A-B-004-04

Copyright © 2001 Epson Research and Development, Inc. All Rights Reserved.

Information in this document is subject to change without notice. You may download and use this document, but only for your own use in evaluating Seiko Epson/EPSON products. You may not modify the document. Epson Research and Development, Inc. disclaims any representation that the contents of this document are accurate or current. The Programs/Technologies described in this document may contain material protected under U.S. and/or International Patent laws.
EPSON is a registered trademark of Seiko Epson Corporation. All other trademarks are the property of their respective owners.

THIS PAGE LEFT BLANK

13505VIRT

13505VIRT demonstrates the virtual display capability of the S1D13505. A virtual display is where the image to be displayed is larger than the physical display device (CRT or LCD). 13505VIRT uses panning and scrolling to allow the display device to show a “window” into the entire image.

The 13505VIRT display utility must be configured and/or compiled to work with your hardware platform. The program 13505CFG.EXE can be used to configure 13505VIRT. Consult the 13505CFG users guide, document number X23A-B-001-xx, for more information on configuring S1D13505 utilities.

This software is designed to work in both embedded and personal computer (PC) environments. For the embedded environment, it is assumed that the system has a means of downloading software from the PC to the target platform. Typically this is done by serial communications, where the PC uses a terminal program to send control commands and information to the target processor. Alternatively, the PC can program an EPROM, which is then placed in the target platform. Some target platforms can also communicate with the PC via a parallel port connection, or an Ethernet connection.

S1D13505 Supported Evaluation Platforms

13505VIRT has been tested with the following S1D13505 supported evaluation platforms:

- PC system with an Intel 80x86 processor.
- M68332BCC (Business Card Computer) board, revision B, with a Motorola MC68332 processor.
- M68EC000IDP (Integrated Development Platform) board, revision 3.0, with a Motorola M68EC000 processor.
- SH3-LCEVB board, revision B, with an Hitachi SH-3 HD6417780 processor.

Installation

PC platform: copy the file 13505VIRT.EXE to a directory that is in the DOS path on your hard drive.

Embedded platform: download the program 13505VIRT to the system.

Usage

PC platform: at the prompt, type **`13505virt [w=??] [/a] [/?]`**.

Embedded platform: execute **`13505virt`** and at the prompt, type the command line argument.

Where:	`no argument`	panning and scrolling is performed manually
	`w=??`	for manual mode, specifies the width of the virtual display which must be a multiple of 8 and less than 2048 (the default width is double the physical panel width); the maximum height is based on the display memory
	`/a`	panning and scrolling is performed automatically
	`/?`	displays the help screen

The following keyboard commands are for navigation within the program.

Manual mode:	↑	scrolls up
	↓	scrolls down
	←	pans to the left
	→	pans to the right
	`CTRL-`↑	scrolls up several lines
	`CTRL-`↓	scrolls down several lines
	`CTRL-`←	pans to the left several lines
	`CTRL-`→	pans to the right several lines
	`HOME`	moves the display screen so that the upper right corner of the virtual screen shows in the display
	`END`	moves the display screen so that the lower left corner of the virtual screen shows in the display
Automatic and Manual modes:		
	`b`	changes the color depth (bit-per-pixel)
	`ESC`	exits 13505VIRT

13505VIRT Example

1. Type "13505virt /a" to automatically pan and scroll.
2. Press "b" to change the bit-per-pixel value from 16 to 15 bit-per-pixel.
3. Repeat step 2 for the following bit-per-pixel values:
   16, 15, 8, 4, 2, and 1.
4. Press <ESC> to exit the program.

Comments

- When using a PC with the S5U13505 evaluation board, the PC must not have more than 12M bytes of system memory.

Program Messages

`ERROR: Did not find a 13505 device.`

The HAL was unable to read the revision code register on the S1D13505. Ensure that the S1D13505 hardware is installed and that the hardware platform has been set up correctly.

`ERROR: Too many devices registered.`

There are too many display devices attached to the HAL. The HAL currently supports only one device.

`ERROR: Could not register S1D13505F00A device.`

A 13505 device was not found at the configured addresses. Check the configuration address using the 13505CFG configuration program.

`ERROR: Not enough display buffer memory for ?? BPP.`

There was not enough memory for a virtual screen.

THIS PAGE LEFT BLANK

EPSON®

S1D13505 Embedded RAMDAC LCD/CRT Controller

13505PLAY Diagnostic Utility

Document Number: X23A-B-005-04

Copyright © 2001 Epson Research and Development, Inc. All Rights Reserved.

Information in this document is subject to change without notice. You may download and use this document, but only for your own use in evaluating Seiko Epson/EPSON products. You may not modify the document. Epson Research and Development, Inc. disclaims any representation that the contents of this document are accurate or current. The Programs/Technologies described in this document may contain material protected under U.S. and/or International Patent laws.
EPSON is a registered trademark of Seiko Epson Corporation. All other trademarks are the property of their respective owners.

THIS PAGE LEFT BLANK

13505PLAY

13505PLAY is a diagnostic utility which allows the user to read/write to all the S1D13505 Registers, Look-Up Tables and Display Buffer. 13505PLAY is similar to the DOS DEBUG program; commands are received from the standard input device, and output is sent to the standard output device (console for Intel, terminal for embedded platforms). This utility requires the target platform to support standard IO (stdio).

13505PLAY commands can be entered interactively by a user, or be executed from a script file. Scripting is a powerful feature which allows command sequences to be used repeatedly without re-entry.

The 13505PLAY diagnostic utility must be configured and/or compiled to work with your hardware platform. The program 13505CFG.EXE can be used to configure 13505PLAY. Consult the 13505CFG users guide, document number X23A-B-001-xx, for more information on configuring S1D13505 utilities.

This software is designed to work in both embedded and personal computer (PC) environments. For the embedded environment, it is assumed that the system has a means of downloading software from the PC to the target platform. Typically this is done by serial communications, where the PC uses a terminal program to send control commands and information to the target processor. Alternatively, the PC can program an EPROM, which is then placed in the target platform. Some target platforms can also communicate with the PC via a parallel port connection, or an Ethernet connection.

S1D13505 Supported Evaluation Platforms

13505PLAY supports the following S1D13505 evaluation platforms:

- PC system with an Intel 80x86 processor.
- M68332BCC (Business Card Computer) board, revision B, with a Motorola MC68332 processor.
- M68EC000IDP (Integrated Development Platform) board, revision 3.0, with a Motorola M68EC000 processor.
- SH3-LCEVB board, revision B, with an Hitachi SH-3 HD6417780 processor.

Installation

PC platform: copy the file 13505PLAY.EXE to a directory that is in the DOS path on your hard drive.

Embedded platform: download the program 13505PLAY to the system.

Usage

PC platform: at the prompt, type **`13505play [/?]`**.

Embedded platform: execute **`13505play`** and at the prompt, type the command line argument.

Where: `/?` displays program version information.

The following commands are valid within the 13505PLAY program.

b 8|16	- Sets the ISA bus to 8 or 16 bits. - Only sets up the PAL on the S5U13505 evaluation board. There is no readback capability. - Only supported on a S5U13505 evaluation board for the PC platform. Switch 1-1 on the ealuation board must be set to the same bus width as used with this command.
`f[w] addr1 addr2 data . . .`	- Fills bytes or words [w] from address 1 to address 2 with the data specified. - Data can be multiple values (e.g. `F 0 20 1 2 3 4` fills 0 to 0x20 with a repeating pattern of 1 2 3 4).
`h [lines]`	- Halts after *lines* of display. This feature halts the display during long read operations to prevent data from scrolling off the display. Similar to the DOS MORE command. - Set to 0 to disable this feature.
`i [LCD] [CRT]`	- Initializes the chip with the specified configuration. The configuration is embedded in the 13505PLAY utility and can be changed using the 13505CFG utility. See the 13505CFG guide, document number X23A-B-001-xx, for instructions on changing the configuration. - If the output device is specified, the user can select LCD, CRT, or both devices.
`l index [red green blue]`	- Reads/writes Look-Up Table (LUT) values. - Writes data to the LUT[index] when data is specified. - Reads the LUT[index] when the data is not specified.
`la`	- Reads all LUT values.
`m [bpp]`	- Reads current mode information. - Sets the color depth (bpp) if “bpp” is specified.

`p 1|0`	- Set power mode (hardware suspend). 1 = set hardware suspend. 0 = reset hardware suspend. - This command is only supported on a S5U13505 evaluation board for the PC platform.
`q`	- Quits the 13505PLAY utility.
`r[w] addr [count]`	- Reads number of bytes or words [w] from the address specified by “addr”. If “count” is not specified, then 16 bytes/words are read.
`v`	- Calculates the frame rate from VNDP count (PC platform only).
`w[w] addr data . . .`	- Writes bytes or words [w] of data to the address specified by “addr”. - Data can be multiple values (e.g. `W 0 1 2 3 4` writes the byte values 1 2 3 4 starting at address 0).
`x[w] index [data]`	- Reads/writes bytes or words [w] to/from the registers. - Writes data to REG[index] when “data” is specified. - Reads data from REG[index] when “data” is not specified. - **Some platforms may provide upredictable results when non-aligned word addresses are entered.**
`xa`	- Reads all registers.
`?`	- Displays Help information.

13505PLAY Example

1. Type "13505PLAY" to start the program.
2. Type "?" for help.
3. Type "i" to initialize the registers.
4. Type "xa" to display the contents of the registers.
5. Type "x 5" to read register 5.
6. Type "x 3 10" to write 10h to register 3.
7. Type "f 0 ffff aa" to fill the first FFFFh bytes of the display buffer with AAh.
8. Type "f 0 1fffff aa" to fill 2M bytes of the display buffer with AAh.
9. Type "r 0 100" to read the first 100h bytes of the display buffer.
10. Type "q" to exit the program.

Scripting

13505PLAY can be driven by a script file. This is useful when:

- there is no display output and a current register status is required.
- various registers must be quickly changed to view results.

A script file is an ASCII text file with one 13505PLAY command per line. All scripts must end with a “q” (quit) command.

On a PC platform, a typical script command line might be:
“13505PLAY < dumpregs.scr > results.”

This causes the file “dumpregs.scr” to be interpreted as commands by 13505PLAY and the results to be sent to the file “results.”

Example: Create an ASCII text file that contains the commands `i`, `xa`, and `q`.

```
; This file initializes the S1D13505 and reads the registers.
; Note: after a semicolon (;), all characters on a line are ignored.
; Note: all script files must end with the “q” command.
i
xa
q
```

Comments

- All numeric values are considered to be hexadecimal unless identified otherwise. For example, 10 = 10h = 16 decimal; 10t = 10 decimal; 010b = 2 decimal.
- Redirecting commands from a script file (PC platform) allows those commands to be executed as though they were typed.
- When using a PC with the S5U13505 evaluation board, the PC must not have more than 12M bytes of system memory.

Program Messages

`WARNING: Did not find a 13505 device.`

The HAL was unable to read the revision code register on the S1D13505. Ensure that the S1D13505 hardware is installed and that the hardware platform has been set up correctly.

`ERROR: Failed to change to ?? mode.`

Could not change to CRT, LCD, or SIMUL mode. This message generally means that the given hardware/software setup violates the timing limitations described in the S1D13505 Hardware Functional Specification, document number X23A-A-001-xx.

`ERROR: Could not change to ?? bit-per-pixel.`

This message generally means that the given hardware/software setup violates the timing limitations described in the S1D13505 Hardware Functional Specification, document number X23A-A-001-xx.

`ERROR: Too many devices registered.`

There are too many display devices attached to the HAL. The HAL currently supports only one device.

`ERROR: Could not register S1D13505F00A device.`

A S1D13505 device was not found at the configured addresses. Check the configuration address using the 13505CFG configuration program.

`ERROR: Insufficient memory for ?? bit-per-pixel.`

The given display resolution requires a larger display buffer than is available to store the image. Either increase the amount of display buffer or select a lower color depth (bpp).

`WARNING: Clocks are too fast for given mode.`

This message is only shown if the “m” command was entered and the MCLK/PCLK frequencies violated the timings in the S1D13505 Hardware Functional Specification, document number X23A-A-001-xx.

THIS PAGE LEFT BLANK

EPSON®

S1D13505 Embedded RAMDAC LCD/CRT Controller

13505BMP Demonstration Program

Document Number: X23A-B-006-04

Copyright © 2001 Epson Research and Development, Inc. All Rights Reserved.

Information in this document is subject to change without notice. You may download and use this document, but only for your own use in evaluating Seiko Epson/EPSON products. You may not modify the document. Epson Research and Development, Inc. disclaims any representation that the contents of this document are accurate or current. The Programs/Technologies described in this document may contain material protected under U.S. and/or International Patent laws.
EPSON is a registered trademark of Seiko Epson Corporation. All other trademarks are the property of their respective owners.

THIS PAGE LEFT BLANK

13505BMP

13505BMP is a demonstration utility used to show the S1D13505 display capabilities by rendering bitmap images on the display. The program will display any bitmap in Windows BMP file format and then exit. 13505BMP also loads images to demonstrate the hardware cursor and ink layer.

13505BMP is designed to operate on a personal computer (PC) in the DOS environment only. Other embedded platforms are not supported due to the possible lack of system memory or structured file system.

The 13505BMP demonstration utility must be configured and/or compiled to work with your hardware configuration. The program 13505CFG.EXE can be used to configure 13505BMP. Consult the 13505CFG users guide, document number X23A-B-001-xx, for more information on configuring S1D13505 utilities.

S1D13505 Supported Evaluation Platforms

13505BMP supports the following S1D13505 evaluation platforms:

- PC system with an Intel 80x86 processor.

Note
The 13505BMP source code may be modified by the OEM to support other evaluation platforms.

Installation

Copy the file 13505BMP.EXE to a directory that is in the DOS path on your hard drive.

Usage

At the prompt, type **`13505bmp bmpfile [t=reg | cursor | ink] [x=n y=n] [/buffer] [/crt] [/lcd] [/mouse] [/noclear] [/noinit] [/p] [/v] [/?]`**.

Where:	**`bmpfile`**	filename of a windows format bmp image
	t=??	reg: regular display image cursor: hardware cursor image ink: ink layer image
	x=n	n = starting cursor x position (default position = 0)
	y=n	n = starting cursor y position (default position = 0)
	/buffer	enable double buffering (image not displayed until completely loaded in memory)
	`/crt`	displays the image on a CRT
	`/lcd`	displays the image on an LCD panel

/mouse	use mouse to move hardware cursor (press ESC to exit program)
/noclear	don't clear display buffer memory
/noinit	skips register initialization
/p	portrait mode (not available for hardware cursor or ink layer images)
/v	verbose mode (provides information about the displayed images)
/?	displays the Help screen

Note

13505BMP will automatically finish execution and return to the prompt.

Hardware Cursor/Ink Layer

13505BMP requires the BMP images for the Hardware Cursor and the Ink Layer to be stored in specific formats. The Hardware Cursor BMP image must have a color depth of four bit-per-pixel and be 64x64 pixels in resolution. The Ink Layer BMP image must have a color depth of four bit-per-pixel and be the same resolution as the displayed image.

Both images are stored at a color depth of four bit-per-pixel allowing easy editing and saving in most paint programs. To allow the two bit-per-pixel Hardware Cursor and Ink Layer to use the four bit-per-pixel images, they are translated to two bit-per-pixel as in the following table.

Table 1: 4 Bpp to 2 Bpp Translation

Image Color	Displayed Color
white	white
black	black
red	invert
any other color	transparent

13505BMP Examples

To display a bmp image on a CRT, type the following:
13505BMP bmpfile.bmp /crt

To display a bmp image on an LCD, type the following:
13505BMP bmpfile.bmp /lcd

To display a bmp image on an LCD in portrait mode, type the following:
13505BMP bmpfile.bmp /lcd /p

To load a bmp image and a hardware cursor image on an LCD, type the following:
13505BMP /lcd bmpfile.bmp
13505BMP t=cursor /noinit arrow.bmp

To control the cursor with the mouse, include the “/mouse” option when loading the cursor image.

Comments

- 13505BMP displays only Windows BMP format images.
- The PC must not have more than 12M bytes of memory when used with the S5U13505 evaluation board.
- A 24-bit true color bitmap will be displayed at a color depth of 16 bit-per-pixel.
- Only the green component of the image will be seen on a monochrome display.
- Prior to selecting the “/mouse” option, a valid mouse driver must be loaded.
- If x and y coordinates are not specified for the Hardware Cursor, the Hardware Cursor will be displayed starting in the top left corner (position x=0,y=0).

Program Messages

`ERROR: Could not initialize device.`

The given hardware/software setup violates the timing specification as described in the S1D13505 Hardware Functional Specification, document number X23A-A-001-xx.

`ERROR: Too many devices registered.`

There are too many display devices attached to the HAL. The HAL currently supports only one device.

`ERROR: Could not register S1D13505F00A device.`

A 13505 device was not found at the configured addresses. Check the configuration address using the 13505CFG configuration program.

`ERROR: Did not detect S1D13505.`

The HAL was unable to read the revision code register on the S1D13505. Ensure that the S1D13505 hardware is installed and that the hardware platform has been set up correctly.

`ERROR: Insufficient memory for ?? bit-per-pixel.`

The given display resolution requires more memory than is available to store one complete image. Either increase the amount of display memory or select an image with a lower bit-per-pixel value.

`ERROR: Cannot use /p option with hardware cursor and ink layer. Instead, rotate BMP file manually and load without /p option.`

Because the Hardware Cursor and Ink Layer are not automatically rotated in portrait mode 13505BMP does not support the “/p” option. Instead, rotate the BMP with a paint program and then load the rotated image in landscape (non-portrait) mode.

`ERROR: Cannot use /buffer option without 2 Mbyte of display buffer memory.`

The “/buffer” option is not supported unless the platform has 2M bytes of memory.

`ERROR: Could not switch portrait buffer.`

The HAL library reported an error when changing the screen 1 start address register.

`ERROR: Failed to open BMP file:‘filename’`

The BMP file could not be opened as a read-only file.

`ERROR: ‘filename’ is not a valid bitmap file.`

The file does not contain a valid BMP format image.

`ERROR: Could not initialize hardware cursor.`

The HAL library could not initialize the Hardware Cursor.

`ERROR: BMP file is ?? bit-per-pixel; hardware cursor requires 4 bit-per-pixel BMP file.`

The Hardware Cursor BMP image must always have a color depth of four bit-per-pixel.

`ERROR: Could not initialize ink layer.`

The HAL library could not initialize the Ink Layer.

`ERROR: BMP file is ?? bit-per-pixel; ink layer requires 4 bit-per-pixel BMP file.`

The Ink Layer BMP image must always have a color depth of four bit-per-pixel.

`ERROR: Could not change to ?? bit-per-pixel.`

The HAL library detected that the requested color depth (bit-per-pixel) will violate the S1D13505 hardware specification for clocks. To reprogram the clocks, run 13505CFG and select the desired color depth (bit-per-pixel).

THIS PAGE LEFT BLANK

EPSON®

S1D13505 Embedded RAMDAC LCD/CRT Controller

13505PWR Software Suspend Power Sequencing Utility

Document Number: X23A-B-007-03

Copyright © 2001 Epson Research and Development, Inc. All Rights Reserved.

Information in this document is subject to change without notice. You may download and use this document, but only for your own use in evaluating Seiko Epson/EPSON products. You may not modify the document. Epson Research and Development, Inc. disclaims any representation that the contents of this document are accurate or current. The Programs/Technologies described in this document may contain material protected under U.S. and/or International Patent laws.
EPSON is a registered trademark of Seiko Epson Corporation. All other trademarks are the property of their respective owners.

THIS PAGE LEFT BLANK

13505PWR

13505PWR is a diagnostic utility used to test some of the power save capabilities of the S1D13505. 13505PWR enables or disables the software suspend mode, hardware suspend mode, and the LCD, allowing testing of the power sequencing in each mode.

To measure the timing for power sequencing, GPIO pin 1 is used to trigger an oscilloscope at the point the requested power sequencing function is activated/deactivated. For further information on LCD Power Sequencing and Power Save Modes, refer to the S1D13505 Programming Notes and Examples, document number X23A-G-003-xx, and the S1D13505 Functional Hardware Specification, document number X23A-A-01-xx.

The 13505PWR software suspend power sequencing utility must be configured and/or compiled to work with your hardware platform. The program 13505CFG.EXE can be used to configure 13505PWR. Consult the 13505CFG users guide, document number X23A-B-001-xx, for more information on configuring S1D13505 utilities.

This software is designed to work in both embedded and personal computer (PC) environments. For the embedded environment, it is assumed that the system has a means of downloading software from the PC to the target platform. Typically this is done by serial communications, where the PC uses a terminal program to send control commands and information to the target processor. Alternatively, the PC can program an EPROM, which is then placed in the target platform. Some target platforms can also communicate with the PC via a parallel port connection, or an Ethernet connection.

S1D13505 Supported Evaluation Platforms

13505PWR supports the following S1D13505 evaluation platforms:

- PC system with an Intel 80x86 processor.
- M68332BCC (Business Card Computer) board, revision B, with a Motorola MC68332 processor.
- M68EC000IDP (Integrated Development Platform) board, revision 3.0, with a Motorola M68EC000 processor.
- SH3-LCEVB board, revision B, with an Hitachi SH-3 HD6417780 processor.

Installation

PC platform: copy the file 13505PWR.EXE to a directory that is in the DOS path on your hard drive.

Embedded platform: download the program 13505PWR to the system.

Usage

PC platform: at the prompt, type

`13505pwr [/software | /hardware | /lcd] [/enable | /disable] [/i] [/0 | /1] [/?]`.

Embedded platform: execute **`13505pwr`** and at the prompt, type the command line argument.

Where:	`/software`	selects software suspend
	`/hardware`	selects hardware suspend (PC only)
	`/lcd`	selects the LCD
	`/enable`	activates software suspend, hardware suspend, or the LCD
	`/disable`	deactivates software suspend, hardware suspend, or the LCD
	`/i`	initializes registers
	`/0`	GPIO1 triggers on falling edge (1->0)
	`/1`	GPIO1 triggers on rising edge (0->1)
	`/?`	displays this usage message

Note

13505PWR will automatically finish execution and return to the prompt.

13505PWR Examples

To enable software suspend mode, type the following:
`13505PWR /software /enable`

To disable software suspend mode, type the following:
`13505PWR /software /disable`

To enable hardware suspend mode, type the following:
`13505PWR /hardware /enable`

To disable hardware suspend mode, type the following:
`13505PWR /hardware /disable`

To enable the LCD, type the following:
`13505PWR /lcd /enable`

To disable the LCD, type the following:
`13505PWR /lcd /disable`

Comments

- The `/i` argument is to be used when the registers have not been previously initialized.
- When using a PC with the S5U13505 evaluation board, the PC must not have more than 12M bytes of system memory.
- GPIO1 is used to signal when the software suspend mode, hardware suspend mode, or LCD has been enabled or disabled.
- Hardware suspend is changed by reading or writing to a memory address decoded by the PAL on the S5U13505 evaluation board. This PAL is currently only used for PC platforms, so the S5U13505 evaluation board does not support hardware suspend on embedded platforms.

Program Messages

`ERROR: Did not detect S1D13505.`

The HAL was unable to read the revision code register on the S1D13505. Ensure that the S1D13505 hardware is installed and that the hardware platform has been set up correctly.

`ERROR: Unknown command line argument.`

An invalid command line argument was entered. Enter a valid command line argument.

`ERROR: Already selected SOFTWARE.`

Command line argument `/software` was selected more than once. Select `/software` only once.

`ERROR: Already selected HARDWARE.`

Command line argument `/hardware` was selected more than once. Select `/hardware` only once.

`ERROR: Already selected LCD.`

Command line argument `/lcd` was selected more than once. Select `/lcd` only once.

`ERROR: Already selected ENABLE.`

Command line argument `/enable` was selected more than once. Select `/enable` only once.

`ERROR: Already selected DISABLE.`

Command line argument `/disable` was selected more than once. Select `/disable` only once.

`ERROR: Select /software, /hardware or /lcd.`

Did not select one of the following command line arguments: `/software, /hardware` or `/lcd`. Select `/software`, `/hardware` or `/lcd.`

`ERROR: Select /enable or /disable.`

Neither command line argument `/enable` or `/disable` was selected. Select `/enable` or `/disable`.

`ERROR: Too many devices registered.`

There are too many display devices attached to the HAL. The HAL currently supports only one device.

`ERROR: Could not register S1D13505F00A device.`

A S1D13505 device was not found at the configured addresses. Check the configuration address using the 13505CFG configuration program.

S1D13505 Embedded RAMDAC LCD/CRT Controller

Windows® CE 2.x Display Drivers

Document Number: X23A-E-001-06

Copyright © 2001 Epson Research and Development, Inc. All Rights Reserved.

Information in this document is subject to change without notice. You may download and use this document, but only for your own use in evaluating Seiko Epson/EPSON products. You may not modify the document. Epson Research and Development, Inc. disclaims any representation that the contents of this document are accurate or current. The Programs/Technologies described in this document may contain material protected under U.S. and/or International Patent laws.

EPSON is a registered trademark of Seiko Epson Corporation. Microsoft and Windows are registered trademarks of Microsoft Corporation. All other trademarks are the property of their respective owners.

THIS PAGE LEFT BLANK

WINDOWS® CE 2.x DISPLAY DRIVERS

The Windows CE display driver is designed to support the S1D13505 Embedded RAMDAC LCD/CRT Controller running under the Microsoft Windows CE 2.x operating system. The driver is capable of: 4, 8 and 16 bit-per-pixel landscape modes (no rotation), and 8 and 16 bit-per-pixel SwivelView™ 90 degree mode.

This document and the source code for the Windows CE drivers are updated as appropriate. Before beginning any development, please check the Epson Electronics America Website at www.eea.epson.com or the Epson Research and Development Website at www.erd.epson.com for the latest revisions.

We appreciate your comments on our documentation. Please contact us via email at techpubs@erd.epson.com.

Example Driver Builds

The following sections describe how to build the Windows CE display driver for:

1. Windows CE 2.0 using a command-line interface.
2. Windows CE Platform Builder 2.1x using a command-line interface.

In all examples “x:” refers to the drive letter where Platform Builder is installed.

Build for CEPC (X86) on Windows CE 2.0 using a Command-Line Interface

To build a Windows CE v2.0 display driver for the CEPC (X86) platform using a S5U13505B00C evaluation board, follow the instructions below:

1. Install Microsoft Windows NT v4.0 or 2000.
2. Install Microsoft Visual C/C++ version 5.0 or 6.0.
3. Install the Microsoft Windows CE Embedded Toolkit (ETK) by running SETUP.EXE from the ETK compact disc #1.
4. Create a new project by following the procedure documented in “Creating a New Project Directory” from the Windows CE ETK V2.0. Alternately, use the current “DEMO7” project included with the ETK v2.0. Follow the steps below to create a “X86 DEMO7” shortcut on the Windows NT v4.0 desktop which uses the current “DEMO7” project:
   a. Right click on the “Start” menu on the taskbar.
   b. Click on the item “Open All Users” and the “Start Menu” window will come up.
   c. Click on the icon “Programs”.
   d. Click on the icon “Windows CE Embedded Development Kit”.
   e. Drag the icon “X86 DEMO1” onto the desktop using the right mouse button.
   f. Click on “Copy Here”.
   g. Rename the icon “X86 DEMO1” on the desktop to “X86 DEMO7” by right clicking on the icon and choosing “rename”.
   h. Right click on the icon “X86 DEMO7” and click on “Properties” to bring up the “X86 DEMO7 Properties” window.
   i. Click on “Shortcut” and replace the string “DEMO1” under the entry “Target” with “DEMO7”.
   j. Click on “OK” to finish.
5. Create a sub-directory named S1D13505 under x:\wince\platform\cepc\drivers\display.
6. Copy the source code to the S1D13505 subdirectory.

7. Edit the file x:\wince\platform\cepc\drivers\display\dirs and add S1D13505 into the list of directories.

8. Edit the file PLATFORM.BIB (located in x:\wince\platform\cepc\files) to set the default display driver to the file EPSON.DLL (EPSON.DLL will be created during the build in step 13).

   Replace or comment out the following lines in PLATFORM.BIB:

```
IF CEPC_DDI_VGA2BPP
        ddi.dll     $(_FLATRELEASEDIR)\ddi_vga2.dll     NK SH
ENDIF
IF CEPC_DDI_VGA8BPP
        ddi.dll     $(_FLATRELEASEDIR)\ddi_vga8.dll     NK SH
ENDIF
IF CEPC_DDI_VGA2BPP !
IF CEPC_DDI_VGA8BPP !
        ddi.dll     $(_FLATRELEASEDIR)\ddi_s364.dll     NK SH
ENDIF
ENDIF
```

   with this line:

```
        ddi.dll     $(_FLATRELEASEDIR)\EPSON.dll        NK SH
```

9. The file MODE0.H (located in x:\wince\platform\cepc\drivers\display\S1D13505) contains the register values required to set the screen resolution, color depth (bpp), display type, active display (LCD/CRT/TV), display rotation, etc.

   Before building the display driver, refer to the descriptions in the file MODE0.H for the default settings of the driver. If the default does not match the configuration you are building for then MODE0.H will have to be regenerated with the correct information.

   Use the program 13505CFG to generate the header file. For information on how to use 13505CFG, refer to the *13505CFG Configuration Program User Manual*, document number X23A-B-001-xx, available at www.erd.epson.com

   After selecting the desired configuration, export the file as a “C Header File for S1D13505 WinCE Drivers”. Save the new configuration as MODE0.H in x:\wince\platform\cepc\drivers\display\S1D13505, replacing the original configuration file.

10. Edit the file PLATFORM.REG to match the screen resolution, color depth (bpp), active display (LCD/CRT/TV) and rotation information in MODE.H. PLATFORM.REG is
    located in x:\wince\platform\cepc\files.

For example, the display driver section of PLATFORM.REG should be as follows when using a 640x480 LCD panel with a color depth of 8 bpp in SwivelView 0° (landscape) mode:

```
; Default for EPSON Display Driver
; 640x480 at 8 bits/pixel, LCD display, no rotation
; Useful Hex Values
; 1024=0x400, 768=0x300 640=0x280 480=0x1E0 320=140 240=0xF0
[HKEY_LOCAL_MACHINE\Drivers\Display\S1D13505]
"Width"=dword:280
"Height"=dword:1E0
"Bpp"=dword:8
“ActiveDisp”=dword:1
“Rotation”=dword:0
```

11. Delete all the files in the x:\wince\release directory, and delete x:\wince\platform\cepc*.bif
12. Generate the proper building environment by double-clicking on the sample project icon (i.e. X86 DEMO7).
13. Type BLDDEMO <ENTER> at the command prompt of the X86 DEMO7 window to generate a Windows CE image file (NK.BIN).

Build for CEPC (X86) on Windows CE Platform Builder 2.1x using a Command-Line Interface

Throughout this section 2.1x refers to either 2.11 or 2.12 as appropriate.

1. Install Microsoft Windows NT v4.0 or 2000.
2. Install Microsoft Visual C/C++ version 5.0 or 6.0.
3. Install Platform Builder 2.1x by running SETUP.EXE from compact disk #1.
4. Follow the steps below to create a “Build Epson for x86” shortcut which uses the current “Minshell” project icon/shortcut on the Windows desktop.
   a. Right click on the “Start” menu on the taskbar.
   b. Click on the item “Explore”, and “Exploring -- Start Menu” window will come up.
   c. Under “x:\winnt\profiles\all users\start menu\programs\microsoft windows ce platform builder\x86 tools”, find the icon “Build Minshell for x86”.
   d. Drag the icon “Build Minshell for x86” onto the desktop using the right mouse button.

e. Choose “Copy Here”.

f. Rename the icon “Build Minshell for x86” to “Build Epson for x86” by right clicking on the icon and choosing “rename”.

g. Right click on the icon “Build Epson for x86” and click on “Properties” to bring up the “Build Epson for x86 Properties” window.

h. Click on “Shortcut” and replace the string “Minshell” under the entry “Target” with “Epson”.

i. Click on “OK” to finish.

5. Create an EPSON project.

   a. Make an Epson directory under x:\wince\public.

   b. Copy MAXALL and its sub-directories (x:\wince\public\maxall) to the Epson directory.

      xcopy /s /e x:**\wince\public\maxall*.* \wince\public\epson**

   c. Rename x:\wince\public\epson\maxall.bat to epson.bat.

   d. Edit EPSON.BAT to add the following lines to the end of the file:

      ```
      @echo on
      set CEPC_DDI_S1D13505=1
      @echo off
      ```

6. Make an S1D13505 directory under x:\wince\platform\cepc\drivers\display, and copy the S1D13505 driver source code into x:\wince\platform\cepc\drivers\display\S1D13505.

7. Edit the file x:\wince\platform\cepc\drivers\display\dirs and add S1D13505 into the list of directories.

8. Edit the file x:\wince\platform\cepc\files\platform.bib and make the following two changes:

   a. Insert the following text after the line “IF ODO_NODISPLAY !”:

      ```
      IF CEPC_DDI_S1D13505
            ddi.dll     $(_FLATRELEASEDIR)\epson.dll          NK SH
      ENDIF
      ```

   b. Find the section shown below, and insert the lines as marked:

      ```
      IF CEPC_DDI_S1D13505 !                    Insert this line
      IF CEPC_DDI_S3VIRGE !
      IF CEPC_DDI_CT655X !
      IF CEPC_DDI_VGA8BPP !
      ```

```
        ddi.dll     $(_FLATRELEASEDIR)\ddi_s364.dll     NK  SH
    ENDIF
    ENDIF
    ENDIF
    ENDIF                                   Insert this line
```

9. The file MODE0.H (located in x:\wince\platform\cepc\drivers\display\S1D13505) contains the register values required to set the screen resolution, color depth (bpp), display type, active display (LCD/CRT/TV), display rotation, etc.

   Before building the display driver, refer to the descriptions in the file MODE0.H for the default settings of the driver. If the default does not match the configuration you are building for then MODE0.H will have to be regenerated with the correct information.

   Use the program 13505CFG to generate the header file. For information on how to use 13505CFG, refer to the *13505CFG Configuration Program User Manual*, document number X23A-B-001-xx, available at www.erd.epson.com

   After selecting the desired configuration, export the file as a “C Header File for S1D13505 WinCE Drivers”. Save the new configuration as MODE0.H in x:\wince\platform\cepc\drivers\display\S1D13505, replacing the original configuration file.

10. Edit the file PLATFORM.REG to match the screen resolution, color depth (bpp), active display (LCD/CRT/TV) and rotation information in MODE.H. PLATFORM.REG is located in x:\wince\platform\cepc\files.

    For example, the display driver section of PLATFORM.REG should be as follows when using a 640x480 LCD panel with a color depth of 8 bpp in SwivelView 0° (landscape) mode:

```
; Default for EPSON Display Driver
; 640x480 at 8 bits/pixel, LCD display, no rotation
; Useful Hex Values
; 1024=0x400, 768=0x300 640=0x280 480=0x1E0 320=140 240=0xF0
[HKEY_LOCAL_MACHINE\Drivers\Display\S1D13505]
"Width"=dword:280
"Height"=dword:1E0
"Bpp"=dword:8
“ActiveDisp”=dword:1
“Rotation”=dword:0
```

11. Delete all the files in \wince\release directory and delete x:\wince\platform\cepc*.bif

12. Generate the proper building environment by double-clicking on the Epson project icon --”Build Epson for x86”.

13. Type BLDDEMO <ENTER> at the command prompt of the “Build Epson for x86” window to generate a Windows CE image file (NK.BIN).

Installation for CEPC Environment

Once the NK.BIN file is built, the CEPC environment can be started by booting either from a floppy or hard drive configured with a Windows 9x operating system. The two methods are described below.

1. To start CEPC after booting from a floppy drive:
   a. Create a bootable floppy disk.
   b. Edit CONFIG.SYS on the floppy disk to contain only the following line:

      ```
      device=a:\himem.sys
      ```

   c. Edit AUTOEXEC.BAT on the floppy disk to contain the following lines:

      ```
      mode com1:9600,n,8,1
      loadcepc /B:9600 /C:1 c:\nk.bin
      ```

   d. Copy LOADCEPC.EXE and HIMEM.SYS to the bootable floppy disk. Search for the loadCEPC utility in your Windows CE directories.
   e. Copy NK.BIN to c:\.
   f. Boot the system from the bootable floppy disk.
2. To start CEPC after booting from a hard drive:
   a. Copy LOADCEPC.EXE to C:\. Search for the loadCEPC utility in your Windows CE directories.
   b. Edit CONFIG.SYS on the hard drive to contain only the following line:

      ```
      device=c:\himem.sys
      ```

   c. Edit AUTOEXEC.BAT on the hard drive to contain the following lines:

      ```
      mode com1:9600,n,8,1
      loadcepc /B:9600 /C:1 c:\nk.bin
      ```

   d. Copy NK.BIN and HIMEM.SYS to c:\.
   e. Boot the system.

Configuration

There are several issues to consider when configuring the display driver. The issues cover debugging support, register initialization values and memory allocation. Each of these issues is discussed in the following sections.

Compile Switches

There are several switches, specific to the S1D13505 display driver, which affect the display driver.

The switches are added or removed from the compile options in the file SOURCES.

WINCEVER

This option is automatically set to the numerical version of WinCE for version 2.12 or later. If the environment variable, _WINCEOSVER is not defined, then WINCEVER will default 2.11. The display driver may test against this option to support different WinCE version-specific features.

EpsonMessages

This debugging option enables the display of EPSON-specific debug messages. These debug message are sent to the serial debugging port. This option should be disabled unless you are debugging the display driver, as they will significantly impact the performance of the display driver.

Mode File

A second variable which will affect the finished display driver is the register configurations contained in the mode file.

The MODE tables (contained in files MODE0.H, MODE1.H, MODE2.H . . .) contain register information to control the desired display mode. The MODE tables must be generated by the configuration program 13505CFG.EXE. The display driver comes with example MODE tables.

By default, only MODE0.H is used by the display driver. New mode tables can be created using the 13505CFG program. Edit the #include section of MODE.H to add the new mode table.

If you only support a single display mode, you do not need to add any information to the WinCE registry. If, however, you support more that one display mode, you should create registry values (see below) that will establish the initial display mode. If your display driver contains multiple mode tables, and if you do not add any registry values, the display driver will default to the **first** mode table in your list.

To select which display mode the display driver should use upon boot, add the following lines to your PLATFORM.REG file:

[HKEY_LOCAL_MACHINE\Drivers\Display\S1D13505]

“Width”=dword:280
“Height”=dword:1E0
“Bpp”=dword:8
“Rotation”=dword:0
“RefreshRate”=dword:3C
“Flags”=dword:2

Note that all dword values are in hexadecimal, therefore 280h = 640, 1E0h = 480, and 3Ch = 60. The value for “Flags” should be 1 (LCD), 2 (CRT), or 3 (both LCD and CRT). When the display driver starts, it will read these values in the registry and attempt to match a mode table against them. All values must be present and valid for a match to occur, otherwise the display driver will default to the FIRST mode table in your list.

A WinCE desktop application (or control panel applet) can change these registry values, and the display driver will select a different mode upon warmboot. This allows the display driver to support different display configurations and/or orientations. An example application that controls these registry values will be made available upon the next release of the display driver; preliminary alpha code is available by special request.

Comments

- The display driver is CPU independent, allowing use of the driver for several Windows CE Platform Builder supported platforms.
- When using 13505CFG.EXE to produce multiple MODE tables, make sure you change the Mode Number in the WinCE tab for each mode table you generate. The display driver supports multiple mode tables, but only if each mode table has a unique mode number.
- At this time, the drivers have been tested on the x86 CPUs and have been run with version 2.0 of the ETK, Platform Builder v2.1x.

THIS PAGE LEFT BLANK

S1D13505 Embedded RAMDAC LCD/CRT Controller

Wind River WindML v2.0 Display Drivers

Document Number: X23A-E-002-03

Copyright © 2001 Epson Research and Development, Inc. All Rights Reserved.

Information in this document is subject to change without notice. You may download and use this document, but only for your own use in evaluating Seiko Epson/EPSON products. You may not modify the document. Epson Research and Development, Inc. disclaims any representation that the contents of this document are accurate or current. The Programs/Technologies described in this document may contain material protected under U.S. and/or International Patent laws.

EPSON is a registered trademark of Seiko Epson Corporation. All other trademarks are the property of their respective owners.

THIS PAGE LEFT BLANK

Wind River WindML v2.0 DISPLAY DRIVERS

The Wind River WindML v2.0 display drivers for the S1D13505 Embedded RAMDAC LCD/CRT Controller are intended as “reference” source code for OEMs developing for Wind River’s WindML v2.0. The driver package provides support for both 8 and 16 bit-per-pixel color depths. The source code is written for portability and contains functionality for most features of the S1D13505. Source code modification is required to provide a smaller, more efficient driver for mass production (e.g. CRT support may be removed for products not requiring a CRT).

The WindML display drivers are designed around a common configuration include file called **mode0.h** which is generated by the configuration utility 13505CFG. This design allows for easy customization of display type, clocks, decode addresses, rotation, etc. by OEMs. For further information on 13505CFG, see the *13505CFG Configuration Program User Manual*, document number X23A-B-001-xx.

Note

The WindML display drivers are provided as “reference” source code only. They are intended to provide a basis for OEMs to develop their own drivers for WindML v2.0. These drivers are not backwards compatible with UGL v1.2. For information on the UGL v1.2 display drivers, see *Wind River UGL v1.2 Display Drivers*, document number X23A-E-003-xx.

This document and the source code for the WindML display drivers is updated as appropriate. Please check the Epson Electronics America website at http://www.eea.epson.com or the Epson Research and Development website at http://www.erd.epson.com for the latest revisions before beginning any development.

We appreciate your comments on our documentation. Please contact us via email at documentation@erd.epson.com.

Building a WindML v2.0 Display Driver

The following instructions produce a bootable disk that automatically starts the UGL demo program. These instructions assume that Wind River's Tornado platform is already installed.

Note

For the example steps where the drive letter is given as "x:". Substitute "x" with the drive letter that your development environment is on.

1. Create a working directory and unzip the WindML display driver into it.

   From a command prompt or GUI interface create a new directory (e.g. x:\13505).

   Unzip the file **13505windml.zip** to the newly created working directory. The files will be unzipped to the directories "x:\13505\8bpp" and "x:\13505\16bpp".

2. Configure for the target execution model.

   This example build creates a VxWorks image that fits onto and boots from a single floppy diskette. In order for the VxWorks image to fit on the disk certain modifications are required.

   Replace the file "x:\Tornado\target\config\pcPentium\config.h" with the file "x:\13505\8bpp\File\config.h" (or "x:\13505\16bpp\File\config.h"). The new **config.h** file removes networking components and configures the build image for booting from a floppy disk.

Note

Rather than simply replacing the original **config.h** file, rename it so the file can be kept for reference purposes.

3. Build a boot ROM image.

   From the Tornado tool bar, select Build -> Build Boot ROM. Select "pcPentium" as the BSP and "bootrom_uncmp" as the image.

4. Create a bootable disk (in drive A:).

   From a command prompt change to the directory "x:\Tornado\host\x86-win32\bin" and run the batch file **torvars.bat**. Next, change to the directory "x:\Tornado\target\config\pcPentium" and type:

   mkboot a: bootrom_uncmp

5. If necessary, generate a new **mode0.h** configuration file.

   The file **mode0.h** contains the register values required to set the screen resolution, color depth (bpp), display type, active display (LCD/CRT), rotation, etc. The **mode0.h** file included with the drivers, may not contain applicable values and must be regenerated. The configuration program 13505CFG can be used to build a new **mode0.h** file. If building for 8 bpp, place the new **mode0.h** file in the directory "x:\13505\8bpp\File". If building for 16 bpp, place the new **mode0.h** file in "x:\13505\16bpp\File".

Note

Mode0.h should be created using the configuration utility 13505CFG. For more information on 13505CFG, see the *13505CFG Configuration Program User Manual*, document number X23A-B-001-xx available at www.erd.epson.com.

6. Build the WindML v2.0 library.

   From a command prompt change to the directory “x:\Tornado\host\x86-win32\bin” and run the batch file **torvars.bat**. Next, change to the directory “x:\Tornado\target\src\ugl” and type the command:

   make CPU=PENTIUM ugl

7. Open the S1D13505 workspace.

   From the Tornado tool bar, select File->Open Workspace...->Existing->Browse... and select the file “x:\13505\8bpp\13505.wsp” (or “x:\13505\16bpp\13505.wsp”).

8. Add support for single line comments.

   The WindML v2.0 display driver source code uses single line comment notation, “//”, rather than the ANSI conventional comments, “/*...*/”.

   To add support for single line comments follow these steps:

   a. In the Tornado “Workspace Views” window, click on the “Builds” tab.

   b. Expand the “8bpp Builds” (or “16bpp Builds”) view by clicking on the “+” next to it. The expanded view will contain the item “default”. Right-click on “default” and select “Properties...”. A “Properties:” window will appear.

   c. Select the “C/C++ compiler” tab to display the command switches used in the build. Remove the “-ansi” switch from the line that contains “-g -mpentium -ansi -nostdinc -DRW_MULTI_THREAD”.
   (Refer to GNU ToolKit user's guide for details)

9. Compile the VxWorks image.

   Select the “Builds” tab in the Tornado “Workspace Views” window.

   Right-click on “8bpp files” (or “16bpp files”) and select “Dependencies...”. Click on “OK” to regenerate project file dependencies for “All Project files”.

   Right-click on “8bpp files” (or “16bpp files”) and select “ReBuild All(vxWorks)” to build VxWorks.

10. Copy the VxWorks file to the diskette.

    From a command prompt or through the Windows interface, copy the file “x:\13505\8bpp\default\vxWorks” (or “x:\13505\16bpp\default\vxWorks”) to the bootable disk created in step 4.

11. Start the VxWorks demo.

    Boot the target PC with the VxWorks bootable diskette to run the UGLDEMO automatically.

THIS PAGE LEFT BLANK

S1D13505 Embedded RAMDAC LCD/CRT Controller

Wind River UGL v1.2 Display Drivers

Document Number: X23A-E-003-02

Copyright © 2001 Epson Research and Development, Inc. All Rights Reserved.

Information in this document is subject to change without notice. You may download and use this document, but only for your own use in evaluating Seiko Epson/EPSON products. You may not modify the document. Epson Research and Development, Inc. disclaims any representation that the contents of this document are accurate or current. The Programs/Technologies described in this document may contain material protected under U.S. and/or International Patent laws.

EPSON is a registered trademark of Seiko Epson Corporation. Microsoft and Windows are registered trademarks of Microsoft Corporation. All other trademarks are the property of their respective owners.

THIS PAGE LEFT BLANK

Wind River UGL v1.2 Display Drivers

The Wind River UGL v1.2 display drivers for the S1D13505 Embedded RAMDAC LCD/CRT Controller are intended as “reference” source code for OEMs developing for Wind River’s UGL v1.2. The drivers provide support for both 8 and 16 bit-per-pixel color depths. The source code is written for portability and contains functionality for most features of the S1D13505. Source code modification is required to provide a smaller, more efficient driver for mass production.

The UGL display drivers are designed around a common configuration include file called **mode0.h** which is generated by the configuration utility 13505CFG. This design allows for easy customization of display type, clocks, addresses, rotation, etc. by OEMs. For further information on 13505CFG, see the *13505CFG Configuration Program User Manual*, document number X23A-B-001-xx.

This document and the source code for the UGL display drivers are updated as appropriate. Please check the Epson Electronics America website at http://www.eea.epson.com or the Epson Research and Development website at http://www.erd.epson.com for the latest revisions before beginning any development.

We appreciate your comments on our documentation. Please contact us via e-mail at documentation@erd.epson.com.

Building a UGL v1.2 Display Driver

The following instructions produce a bootable disk that automatically starts the UGL demo software. These instructions assume that the Wind River Tornado platform is correctly installed.

Note

For the example steps where the drive letter is given as “x:”. Substitute “x” with the drive letter your development environment is on.

1. Create a working directory and unzip the UGL display driver into it.

   Using a command prompt or GUI interface create a new directory (e.g. x:\13505).

   Unzip the file **13505ugl.zip** to newly created working directory. The files will be unzipped to the directories “x:\13505\8bpp” and “x:\13505\16bpp”.

2. Configure for the target execution model.

   This example build creates a VxWorks image fits onto and boots from a single floppy diskette. In order for the VxWorks image to fit on the disk certain modifications are required.

   Replace the file “x:\Tornado\target\config\pcPentium\config.h” with the file “x:\13505\8bpp\File\config.h” (or “x:\13505\16bpp\File\config.h”). The new **config.h** file removes networking components and configures the build image for booting from a floppy disk.

Note

Rather than simply replacing the original **config.h** file, rename it so the file can be kept for reference purposes.

3. Build a boot ROM image.

   From the Tornado tool bar, select Build -> Build Boot ROM. Select “pcPentium” as the BSP and “bootrom_uncmp” as the image.

4. Create a bootable disk (in drive A:).

   From a command prompt in the directory “x:\Tornado\target\config\pcPentium” type
   mkboot a: bootrom_uncmp

5. If necessary, generate a new **mode0.h** configuration file.

   The file **mode0.h** contains the register values required to set the screen resolution, color depth (bpp), display type, active display (LCD/CRT), rotation, etc. The **mode0.h,** included with the drivers, sets the display for 640x480 60 Hz output to a CRT display.

   If this setting is inappropriate then **mode0.h** must be regenerated. The configuration program 13505CFG can be used to build a new **mode0.h** file. If building for 8 bpp, place the new **mode0.h** file in “x:\13505\8bpp\File”. If building for 16 bpp, place the new **mode0.h** file in “x:\13505\16bpp\File”.

Note

Mode0.h should be created using the configuration utility 13505CFG. For more information on 13505CFG, see the *13505CFG Configuration Program User Manual*, document number X23A-B-001-xx available at www.erd.epson.com.

6. Open the S1D13505 workspace.

   From the Tornado tool bar, select File->Open Workspace...->Existing->Browse... and select the file “x:\13505\8bpp\13505.wsp” (or “x:\13505\16bpp\13505.wsp”).

7. Add support for single line comments.

   The UGL v1.2 display driver source code uses single line comment notation, “//”, rather than the ANSI conventional comments, “/* . . . */”.

   To add support for single line comments follow these steps:

   a. In the Tornado “Workspace” window, click on the “Builds” tab.

   b. Expand the “8bpp Builds” (or “16bpp Builds”) view by clicking on the “+” next to it. The expanded view will contain the item “default”. Right-click on “default” and select “Properties...”. A properties window will appear.

   c. Select the “C/C++ compiler” tab to display the command switches used in the build. Remove the “-ansi” switch from the line that contains “-g -mpentium -ansi -nostdinc -DRW_MULTI_THREAD”. (Refer to GNU ToolKit user's guide for details)

8. Compile the VxWorks image.

   Select the “Files” tab in the Tornado “Workspace” window.

   Right-click on “8bpp files” (or “16bpp files”) and select “Dependencies...”. Click on “OK” to regenerate project file dependencies for “All Project files”.

   Right-click on “8bpp files” and select “ReBuild All(vxWorks)” to build VxWorks.

9. Copy the VxWorks file to the diskette.

   From a command prompt or through the Windows interface, copy the file “x:\13505\8bpp\default\vxWorks” (or “x:\13505\16bpp\default\vxWorks”) to the bootable disk created in step 4.

10. Start the VxWorks demo.

    Boot the target PC with the VxWorks bootable diskette to run the UGLDEMO automatically.

THIS PAGE LEFT BLANK

S1D13505 Embedded RAMDAC LCD/CRT Controller

Linux Console Driver

Document Number: X23A-E-004-02

Copyright © 2001 Epson Research and Development, Inc. All Rights Reserved.

Information in this document is subject to change without notice. You may download and use this document, but only for your own use in evaluating Seiko Epson/EPSON products. You may not modify the document. Epson Research and Development, Inc. disclaims any representation that the contents of this document are accurate or current. The Programs/Technologies described in this document may contain material protected under U.S. and/or International Patent laws.

EPSON is a registered trademark of Seiko Epson Corporation.

THIS PAGE LEFT BLANK

Linux Console Driver

The Linux console driver for the S1D13505 Embedded RAMDAC LCD/CRT Controller is intended as “reference” source code for OEMs developing for Linux, and supports 4, 8, and 16 bit-per-pixel color depths.

A Graphical User Interface (GUI) such as Gnome can obtain the frame buffer address from this driver allowing the Linux GUI the ability to update the display.

The console driver is designed around a common configuration include file called **s1d13505.h,** which is generated by the configuration utility 13505CFG. This design allows for easy customization of display type, clocks, decode addresses, rotation, etc. by OEMs. For further information on 13505CFG, see the *13505CFG Configuration Program User Manual*, document number X23A-B-001-xx.

Note

The Linux console driver is provided as “reference” source code only. The driver is intended to provide a basis for OEMs to develop their own drivers for Linux.

This document and the source code for the Linux console drivers are updated as appropriate. Please check the Epson Research and Development website at http://www.erd.epson.com for the latest revisions or before beginning any development.

We appreciate your comments on our documentation. Please contact us via e-mail at documentation@erd.epson.com.

Building the Console Driver for Linux Kernel 2.2.x

Follow the steps below to construct a copy of the Linux operating system using the S1D13505 as the console display device. These instructions assume that the GNU development environment is installed and the user is familiar with GNU and the Linux operating system.

1. Acquire the Linux kernel source code.

   You can obtain the Linux kernel source code from your Linux supplier or download the source from: ftp://ftp.kernel.org.

   The S1D13505 reference driver requires Linux kernel 2.2.x. The example S1D13505 reference driver available on www.erd.epson.com was built using Red Hat Linux 6.1, kernel version 2.2.17.

   For information on building the kernel refer to the readme file at:
   ftp://ftp.linuxberg.com/pub/linux/kernel/README

Note
Before continuing with modifications for the S1D13505, you should ensure that you can build and start the Linux operating system.

2. Unzip the console driver files.

   Using a zip file utility, unzip the S1D13505 archive to a temporary directory. (e.g. /tmp)

   When completed the files:
   s1d13xxxfb.c
   s1d13505.h
   Config.in
   fbmem.c
   fbcon-cfb4.c, and
   Makefile
   should be located in the temporary directory.

3. Copy the console driver files to the build directory.

   Copy the files
   /tmp/s1d13xxxfb.c and
   /tmp/s1d13505.h
   to the directory /usr/src/linux/drivers/video.

   Copy the remaining source files
   /tmp/Config.in
   /tmp/fbmem.c
   /tmp/fbcon-cfb4.c, and
   /tmp/Makefile
   into the directory /usr/src/linux/drivers/video replacing the files of the same name.

If your kernel version is not 2.2.17 or you want to retain greater control of the build process then use a text editor and cut and paste the sections dealing with the Epson driver in the corresponding files of the same names.

4. Modify s1d13505.h

   The file s1d13505.h contains the register values required to set the screen resolution, color depth (bpp), display type, active display (LCD/CRT), display rotation, etc.

   Before building the console driver, refer to the descriptions in the file s1d13505.h for the default settings of the console driver. If the default does not match the configuration you are building for then s1d13505.h will have to be regenerated with the correct information.

   Use the program 13505CFG to generate the required header file. For information on how to use 13505CFG, refer to the *13505CFG Configuration Program User Manual*, document number X23A-B-001-xx, available at www.erd.epson.com

   After selecting the desired configuration, choose “File->Export” and select the “C Header File for S1D13505 Generic Drivers” option. Save the new configuration as s1d13505.h in the /usr/src/linux/drivers/video, replacing the original configuration file.

5. Configure the video options.

   From the command prompt in the directory /usr/src/linux run the command:
   make menuconfig

   This command will start a text based interface which allows the selection of build time parameters. From the text interface under “Console drivers” options, select:

   “Support for frame buffer devices”
   “Epson LCD controllers support”
   “S1D13505 support”
   “Advanced low level driver options”
   “xBpp packed pixels support” *

   * where x is the color depth being compiled for.

   Once you have configured the kernel options, save and exit the configuration utility.

6. Compile and install the kernel

   Build the kernel with the following sequence of commands:
   make dep
   make clean
   make bzImage
   /sbin/lilo (if running lilo)

7. Boot to the Linux operating system

   If you are using lilo (Linux Loader), modify the lilo configuration file as discussed in the kernel build README file. If there were no errors during the build, from the command prompt run:

   lilo

   and reboot your system.

Note

In order to use the S1D13505 console driver with X server, you need to configure the X server to use the FBDEV device. A good place to look for the necessary files and instructions on this process is on the Internet at www.xfree86.org

Building the Console Driver for Linux Kernel 2.4.x

Follow the steps below to construct a copy of the Linux operating system using the S1D13505 as the console display device. These instructions assume that the GNU development environment is installed and the user is familiar with GNU and the Linux operating system.

1. Acquire the Linux kernel source code.

   You can obtain the Linux kernel source code from your Linux supplier or download the source from: ftp://ftp.kernel.org.

   The S1D13505 reference driver requires Linux kernel 2.4.x or greater. The example S1D13505 reference driver available on www.erd.epson.com was built using Red Hat Linux 6.1, kernel version 2.4.5.

   For information on building the kernel refer to the readme file at:
   ftp://ftp.linuxberg.com/pub/linux/kernel/README

Note
Before continuing with modifications for the S1D13505, you should ensure that you can build and start the Linux operating system.

2. Unzip the console driver files.

   Using a zip file utility, unzip the S1D13505 archive to a temporary directory. (e.g. /tmp)

   When completed the files:
   Config.in
   fbmem.c
   fbcon-cfb4.c
   Makefile
   should be located in the temporary directory (/tmp), and the files:
   Makefile
   s1d13xxxfb.c
   s1d13505.h
   should be located in a sub-directory called epson within the temporary directory (/tmp/epson).

3. Copy the console driver files to the build directory. Make the directory /usr/src/linux/drivers/video/epson.

   Copy the files
   /tmp/epson/s1d13xxxfb.c
   /tmp/epson/s1d13505.h
   /tmp/epson/Makefile
   to the directory /usr/src/linux/drivers/video/epson.

Copy the remaining source files
/tmp/Config.in
/tmp/fbmem.c
/tmp/fbcon-cfb4.c
/tmp/Makefile
into the directory /usr/src/linux/drivers/video replacing the files of the same name.

If your kernel version is not 2.4.5 or you want to retain greater control of the build process then use a text editor and cut and paste the sections dealing with the Epson driver in the corresponding files of the same names.

4. Modify s1d13505.h

The file s1d13505.h contains the register values required to set the screen resolution, color depth (bpp), display type, active display (LCD/CRT), display rotation, etc.

Before building the console driver, refer to the descriptions in the file s1d13505.h for the default settings of the console driver. If the default does not match the configuration you are building for then s1d13505.h will have to be regenerated with the correct information.

Use the program 13505CFG to generate the required header file. For information on how to use 13505CFG, refer to the *13505CFG Configuration Program User Manual*, document number X23A-B-001-xx, available at www.erd.epson.com

After selecting the desired configuration, choose “File->Export” and select the “C Header File for S1D13505 Generic Drivers” option. Save the new configuration as s1d13505.h in the /usr/src/linux/drivers/video, replacing the original configuration file.

5. Configure the video options.

From the command prompt in the directory /usr/src/linux run the command:
make menuconfig

This command will start a text based interface which allows the selection of build time parameters. From the options presented select:

“Code maturity level” options
“Prompt for development and/or incomplete drivers”
“Console drivers” options
“Frame-buffer support”
“Support for frame buffer devices (EXPERIMENTAL)”
“EPSON LCD/CRT/TV controller support”
“EPSON S1D13505 Support”
“Advanced low-level driver options”
“xbpp packed pixels support” *

* where x is the color depth being compile for.

Once you have configured the kernel options, save and exit the configuration utility.

6. Compile and install the kernel

   Build the kernel with the following sequence of commands:

   ```
   make dep
   make clean
   make bzImage
   /sbin/lilo (if running lilo)
   ```

7. Boot to the Linux operating system

   If you are using lilo (Linux Loader), modify the lilo configuration file as discussed in the kernel build README file. If there were no errors during the build, from the command prompt run:

   ```
   lilo
   ```

   and reboot your system.

Note

In order to use the S1D13505 console driver with X server, you need to configure the X server to use the FBDEV device. A good place to look for the necessary files and instructions on this process is on the Internet at www.xfree86.org

THIS PAGE LEFT BLANK

S1D13505 Embedded RAMDAC LCD/CRT Controller

Windows® CE 3.x Display Drivers

Document Number: X23A-E-006-01

Copyright © 2001 Epson Research and Development, Inc. All Rights Reserved.

Information in this document is subject to change without notice. You may download and use this document, but only for your own use in evaluating Seiko Epson/EPSON products. You may not modify the document. Epson Research and Development, Inc. disclaims any representation that the contents of this document are accurate or current. The Programs/Technologies described in this document may contain material protected under U.S. and/or International Patent laws.

EPSON is a registered trademark of Seiko Epson Corporation. Microsoft and Windows are registered trademarks of Microsoft Corporation. All other trademarks are the property of their respective owners.

THIS PAGE LEFT BLANK

WINDOWS® CE 3.x DISPLAY DRIVERS

The Windows CE 3.x display driver is designed to support the S1D13505 Embedded RAMDAC LCD/CRT Controller running the Microsoft Windows CE operating system, version 3.0. The driver is capable of: 4, 8 and 16 bit-per-pixel landscape modes (no rotation), and 8 and 16 bit-per-pixel SwivelView™ 90 degree mode.

This document and the source code for the Windows CE drivers are updated as appropriate. Before beginning any development, please check the Epson Electronics America Website at www.eea.epson.com or the Epson Research and Development Website at www.erd.epson.com for the latest revisions.

We appreciate your comments on our documentation. Please contact us via email at techpubs@erd.epson.com.

Example Driver Builds

The following sections describe how to build the Windows CE display driver for:

1. Windows CE Platform Builder 3.00 using the GUI interface.
2. Windows CE Platform Builder 3.00 using the command-line interface.

In all examples “x:” refers to the drive letter where Platform Builder is installed.

Build for CEPC (X86) on Windows CE Platform Builder 3.00 using the GUI Interface

1. Install Microsoft Windows 2000 Professional, or Windows NT Workstation version 4.0 with Service Pack 5 or later.
2. Install Windows CE Platform Builder 3.00.
3. Start Platform Builder by double-clicking on the Microsoft Windows CE Platform Builder icon.
4. Create a new project.
   a. Select File | New.
   b. In the dialog box, select the Platforms tab.
   c. In the platforms dialog box, select “WCE Platform”, set a location for the project (such as x:\myproject), set the platform name (such as myplatform), and set the Processors to “Win32 (WCE x86)”.
   d. Click the OK button.
   e. In the dialog box “WCE Platform - Step 1 of 2”, select CEPC.
   f. Click the Next button.
   g. In the dialog box “WCE Platform - Step 2 of 2”, select Minimal OS (Minkern).
   h. Click the Finish button.
   i. In the dialog box “New Platform Information”, click the OK button.
5. Set the active configuration to “Win32 (WCE x86) Release”.
   a. From the Build menu, select “Set Active Configuration”.
   b. Select “MYPLATFORM - Win32 (WCE x86) Release”.
   c. Click the OK button.
6. Add the environment variable CEPC_DDI_S1D13X0X.
   a. From the Platform menu, select “Settings”.
   b. Select the “Environment” tab.
   c. In the Variable box, type “CEPC_DDI_S1D13X0X”.

d. In the Value box, type “1”.

e. Click the Set button.

f. Click the OK button.

7. Create a new directory S1D13505, under x:\wince300\platform\cepc\drivers\display, and copy the S1D13505 driver source code into this new directory.

8. Add the S1D13505 driver component.

   a. From the Platform menu, select “Insert | User Component”.

   b. Set “Files of type:” to “All Files (*.*)”.

   c. Select the file x:\wince300\platform\cepc\drivers\display\S1D13505\sources.

   d. In the “User Component Target File” dialog box, select browse and then select the path and the file name of “sources”.

9. Delete the component “ddi_flat”.

   a. In the Workspace window, select the ComponentView tab.

   b. Show the tree for MYPLATFORM components by clicking on the ‘+’ sign at the root of the tree.

   c. Right-click on the ddi_flat component.

   d. Select “Delete”.

   e. From the File menu, select “Save Workspace”.

10. From the Workspace window, click on ParameterView Tab. Show the tree for MY-PLATFORM Parameters by clicking on the ‘+’ sign at the root of the tree. Expand the the WINCE300 tree and then click on “Hardware Specific Files” and then double click on “PLATFORM.BIB”. Edit the file the PLATFORM.BIB file and make the following two changes:

    a. Insert the following text after the line “IF ODO_NODISPLAY !”:

```
IF CEPC_DDI_S1D13X0X
        ddi.dll    $(_FLATRELEASEDIR)\S1D13X0X.dll  NK SH
ENDIF
```

    b. Find the section shown below, and insert the lines as marked:

```
IF CEPC_DDI_FLAT !
IF CEPC_DDI_S1D13X0X!          ;Insert this line
IF CEPC_DDI_S3VIRGE !
IF CEPC_DDI_CT655X !
IF CEPC_DDI_VGA8BPP !
IF CEPC_DDI_S3TRIO64 !
IF CEPC_DDI_ATI !
```

```
        ddi.dll    $(_FLATRELEASEDIR)\ddi_flat.dll      NK SH
    ENDIF
    ENDIF
    ENDIF
    ENDIF
    ENDIF
    ENDIF                                   ;Insert this line
    ENDIF
```

11. Modify MODE0.H.

    The file MODE0.H (located in x:\wince300\platform\cepc\drivers\display\S1D13505) contains the register values required to set the screen resolution, color depth (bpp), display type, active display (LCD/CRT/TV), display rotation, etc.

    Before building the display driver, refer to the descriptions in the file MODE0.H for the default settings of the console driver. If the default does not match the configuration you are building for then MODE0.H will have to be regenerated with the correct information.

    Use the program 13505CFG to generate the header file. For information on how to use 13505CFG, refer to the *13505CFG Configuration Program User Manual*, document number X23A-B-001-xx, available at www.erd.epson.com

    After selecting the desired configuration, export the file as a “C Header File for S1D13505 WinCE Drivers”. Save the new configuration as MODE0.H in the \wince300\platform\cepc\drivers\display, replacing the original configuration file.

12. From the Platform window, click on ParameterView Tab. Show the tree for MY-PLATFORM Parameters by clicking on the ‘+’ sign at the root of the tree. Expand the the WINCE300 tree and click on “Hardware Specific Files”, then double click on “PLATFORM.REG”. Edit the file PLATFORM.REG to match the screen resolution, color depth, and rotation information in MODE.H.

    For example, the display driver section of PLATFORM.REG should be as follows when using a 640x480 LCD panel with a color depth of 8 bpp and a SwivelView mode of 0° (landscape):

```
; Default for EPSON Display Driver
; 640x480 at 8 bits/pixel, LCD display, no rotation
; Useful Hex Values
; 1024=0x400, 768=0x300 640=0x280 480=0x1E0 320=140 240=0xF0
[HKEY_LOCAL_MACHINE\Drivers\Display\S1D13505]
“Width”=dword:280
“Height”=dword:1E0
“Bpp”=dword:8
```

"ActiveDisp"=dword:1

"Rotation"=dword:0

13. From the Build menu, select "Rebuild Platform" to generate a Windows CE image file (NK.BIN) in the project directory x:\myproject\myplatform\reldir\x86_release\nk.bin.

Build for CEPC (X86) on Windows CE Platform Builder 3.00 using the Command-Line Interface

1. Install Microsoft Windows 2000 Professional, or Windows NT Workstation version 4.0 with Service Pack 5 or later.

2. Install Windows CE Platform Builder 3.00.

3. Create a batch file called x:\wince300\cepath.bat. Put the following in cepath.bat:
```
x:
cd \wince300\public\common\oak\misc
call wince x86 i486 CE MINSHELL CEPC
set IMGNODEBUGGER=1
set WINCEREL=1
set CEPC_DDI_S1D13X0X=1
```

4. Generate the build environment by calling cepath.bat.

5. Create a new folder called S1D13505 under x:\wince300\platform\cepc\drivers\display, and copy the S1D13505 driver source code into x:\wince300\platform\cepc\drivers\display\S1D13505.

6. Edit the file x:\wince300\platform\cepc\drivers\display\dirs and add S1D13505 into the list of directories.

7. Edit the file x:\wince300\platform\cepc\files\platform.bib and make the following two changes:

   a. Insert the following text after the line "IF ODO_NODISPLAY !":
```
IF CEPC_DDI_S1D13X0X
        ddi.dll    $(_FLATRELEASEDIR)\S1D13X0X.dll  NK SH
ENDIF
```

   b. Find the section shown below, and insert the lines as marked:
```
IF CEPC_DDI_FLAT !
IF CEPC_DDI_S1D13X0X!          ;Insert this line
IF CEPC_DDI_S3VIRGE !
IF CEPC_DDI_CT655X !
IF CEPC_DDI_VGA8BPP !
IF CEPC_DDI_S3TRIO64 !
IF CEPC_DDI_ATI !
```

```
        ddi.dll    $(_FLATRELEASEDIR)\ddi_flat.dll      NK SH
    ENDIF
    ENDIF
    ENDIF
    ENDIF
    ENDIF
    ENDIF                                   ;Insert this line
    ENDIF
```

8. Modify MODE0.H.

   The file MODE0.H (located in x:\wince300\platform\cepc\drivers\display\S1D13505) contains the register values required to set the screen resolution, color depth (bpp), display type, active display (LCD/CRT/TV), display rotation, etc.

   Before building the display driver, refer to the descriptions in the file MODE0.H for the default settings of the display driver. If the default does not match the configuration you are building for then MODE0.H will have to be regenerated with the correct information.

   Use the program 13505CFG to generate the header file. For information on how to use 13505CFG, refer to the *13505CFG Configuration Program User Manual*, document number X23A-B-001-xx, available at www.erd.epson.com

   After selecting the desired configuration, export the file as a “C Header File for S1D13505 WinCE Drivers”. Save the new configuration as MODE0.H in the \wince300\platform\cepc\drivers\display, replacing the original configuration file.

9. Edit the file PLATFORM.REG to match the screen resolution, color depth, and rotation information in MODE.H. PLATFORM.REG is located in x:\wince300\platform\cepc\files.

   For example, the display driver section of PLATFORM.REG should be as follows when using a 640x480 LCD panel with a color depth of 8 bpp and a SwivelView mode of 0° (landscape):

```
; Default for EPSON Display Driver
; 640x480 at 8 bits/pixel, LCD display, no rotation
; Useful Hex Values
; 1024=0x400, 768=0x300 640=0x280 480=0x1E0 320=140 240=0xF0
[HKEY_LOCAL_MACHINE\Drivers\Display\S1D13505]
“Width”=dword:280
“Height”=dword:1E0
“Bpp”=dword:8
“ActiveDisp”=dword:1
“Rotation”=dword:0
```

10. Delete all the files in the x:\wince300\release directory and delete the file x:\wince300\platform\cepc*.bif

11. Type BLDDEMO <ENTER> at the command prompt to generate a Windows CE image file. The file generated will be x:\wince300\release\nk.bin.

Installation for CEPC Environment

Once the NK.BIN file is built, the CEPC environment can be started by booting either from a floppy or hard drive configured with a Windows 9x operating system. The two methods are described below.

1. To start CEPC after booting from a floppy drive:
   a. Create a bootable floppy disk.
   b. Edit CONFIG.SYS on the floppy disk to contain only the following line:

      ```
      device=a:\himem.sys
      ```

   c. Edit AUTOEXEC.BAT on the floppy disk to contain the following lines:

      ```
      mode com1:9600,n,8,1
      loadcepc /B:9600 /C:1 c:\nk.bin
      ```

   d. Copy LOADCEPC.EXE and HIMEM.SYS to the bootable floppy disk. Search for the loadCEPC utility in your Windows CE directories.
   e. Copy NK.BIN to c:\.
   f. Boot the system from the bootable floppy disk.
2. To start CEPC after booting from a hard drive:
   a. Copy LOADCEPC.EXE to C:\. Search for the loadCEPC utility in your Windows CE directories.
   b. Edit CONFIG.SYS on the hard drive to contain only the following line:

      ```
      device=c:\himem.sys
      ```

   c. Edit AUTOEXEC.BAT on the hard drive to contain the following lines:

      ```
      mode com1:9600,n,8,1
      loadcepc /B:9600 /C:1 c:\nk.bin
      ```

   d. Copy NK.BIN and HIMEM.SYS to c:\.
   e. Boot the system.

Configuration

There are several issues to consider when configuring the display driver. The issues cover debugging support, register initialization values and memory allocation. Each of these issues is discussed in the following sections.

Compile Switches

There are several switches, specific to the S1D13505 display driver, which affect the display driver.

The switches are added or removed from the compile options in the file SOURCES.

WINCEVER

This option is automatically set to the numerical version of WinCE for version 2.12 or later. If the environment variable, _WINCEOSVER is not defined, then WINCEVER will default 2.11. The S1D display driver may test against this option to support different WinCE version-specific features.

EnablePreferVmem

This option enables the use of off-screen video memory. When this option is enabled, WinCE can optimize some BLT operations by using off-screen video memory to store images. You may need to disable this option for systems with 512K bytes of video memory and VGA (640x480) panels.

ENABLE_ANTIALIASED_FONTS

This option enables the display driver support of antialiased fonts in WinCE. Fonts created with the ANTIALIASED_QUALITY attribute will be drawn with font smoothing.

If you want all fonts to be antialiased by default, add the following line to PLATFORM.REG: [HKEY_LOCAL_MACHINE\SYSTEM\GDI\Fontsmoothing]. This registry option causes WinCE to draw all fonts with smoothing.

Font smoothing is only applicable to 16bpp mode.

EpsonMessages

This debugging option enables the display of EPSON-specific debug messages. These debug message are sent to the serial debugging port. This option should be disabled unless you are debugging the display driver, as they will significantly impact the performance of the display driver.

DEBUG_MONITOR

This option enables the use of the debug monitor. The debug monitor can be invoked when the display driver is first loaded and can be used to view registers, and perform a few debugging tasks. The debug monitor is still under development and is UNTESTED.

This option should remain disabled unless you are performing specific debugging tasks that require the debug monitor.

GrayPalette

This option is intended for the support of monochrome panels only.

The option causes palette colors to be grayscaled for correct display on a mono panel. For use with color panels this option should not be enabled.

Mode File

The MODE tables (contained in files MODE0.H, MODE1.H, MODE2.H . . .) contain register information to control the desired display mode. The MODE tables must be generated by the configuration program 13505CFG.EXE. The display driver comes with example MODE tables.

By default, only MODE0.H is used by the display driver. New mode tables can be created using the 13505CFG program. Edit the #include section of MODE.H to add the new mode table.

If you only support a single display mode, you do not need to add any information to the WinCE registry. If, however, you support more that one display mode, you should create registry values (see below) that will establish the initial display mode. If your display driver contains multiple mode tables, and if you do not add any registry values, the display driver will default to the first mode table in your list.

To select which display mode the display driver should use upon boot, add the following lines to your PLATFORM.REG file:

[HKEY_LOCAL_MACHINE\Drivers\Display\S1D13505]

“Width”=dword:280
“Height”=dword:1E0
“Bpp”=dword:8
“Rotation”=dword:0
“RefreshRate”=dword:3C
“Flags”=dword:2

Note that all dword values are in hexadecimal, therefore 280h = 640, 1E0h = 480, and 3Ch = 60. The value for “Flags” should be 1 (LCD), 2 (CRT), or 3 (both LCD and CRT). When the display driver starts, it will read these values in the registry and attempt to match a mode table against them. All values must be present and valid for a match to occur, otherwise the display driver will default to the first mode table in your list.

A WinCE desktop application (or control panel applet) can change these registry values, and the display driver will select a different mode upon warmboot. This allows the display driver to support different display configurations and/or orientations. An example application that controls these registry values will be made available upon the next release of the display driver; preliminary alpha code is available by special request.

Resource Management Issues

The Windows CE 3.0 OEM must deal with certain display driver issues relevant to Windows CE 3.0. These issues require the OEM balance factors such as: system vs. display memory utilization, video performance, and power off capabilities.

The section “Simple Display Driver Configuration” on page 15 provides a configuration which should work with most Windows CE platforms. This section is only intended as a means of getting started. Once the developer has a functional system, it is recommended to optimize the display driver configuration as described below in “Description of Windows CE Display Driver Issues”.

Description of Windows CE Display Driver Issues

The following are some issues to consider when configuring the display driver to work with Windows CE:

1. When Windows CE enters the Suspend state (power-off), the LCD controller and display memory may lose power, depending on how the system is designed. If display memory loses power, all images stored in display memory are lost.

   If power-off/power-on features are required, the OEM has several options:

   - If display memory power is turned off, add code to the display driver to save any images in display memory to system memory before power-off, and add code to restore these images after power-on.
   - If display memory power is turned off, instruct Windows CE to redraw all images upon power-on. Unfortunately it is not possible to instruct Windows CE to redraw any off-screen images, such as icons, slider bars, etc., so in this case the OEM must also configure the display driver to never use off-screen memory.
   - Ensure that display memory never loses power.

2. Using off-screen display memory significantly improves display performance. For example, slider bars appear more smooth when using off-screen memory. To enable or disable the use of off-screen memory, edit the file: x:\wince300\platform\cepc\drivers\display\S1D13505\sources. In SOURCES, there is a line which, when uncommented, will instruct Windows CE to use off-screen display memory (if sufficient display memory is available):

   CDEFINES=$(CDEFINES) -DEnablePreferVmem

3. In the file PROJECT.REG under CE 3.0, there is a key called PORepaint (search the Windows CE directories for PROJECT.REG). PORepaint is relevant when the Suspend state is entered or exited. PORepaint can be set to 0, 1, or 2 as described below:

   a. PORepaint=0

      - This mode tells Windows CE not to save or restore display memory on suspend or resume.
      - Since display data is not saved and not repainted, this is the FASTEST mode.
      - Main display data in display memory must NOT be corrupted or lost on suspend. The memory clock must remain running.
      - Off-screen data in display memory must NOT be corrupted or lost on suspend. The memory clock must remain running.
      - This mode cannot be used if power to the display memory is turned off.

   b. PORepaint=1

      - This is the default mode for Windows CE.
      - This mode tells Windows CE to save the main display data to the system memory on suspend.
      - This mode is used if display memory power is going to be turned off when the system is suspended, and there is enough system memory to save the image.
      - Any off-screen data in display memory is LOST when suspended. Therefore off-screen memory usage must either be disabled in the display driver (i.e: EnablePreferVmem not defined in SOURCES file), or new OEM-specific code must be added to the display driver to save off-screen data to system memory when the system is suspended, and restored when resumed.
      - If off-screen data is used (provided that the OEM has provided code to save off-screen data when the system suspends), additional code must be added to the display driver's surface allocation routine to prevent the display driver from allocating the "main memory save region" in display memory. When WinCE OS attempts to allocate a buffer to save the main display data, WinCE OS marks the allocation request as preferring display memory. We believe this is incorrect. Code must be added to prevent this specific allocation from being allocated in display memory - it MUST be allocated from system memory.
      - Since the main display data is copied to system memory on suspend, and then simply copied back on resume, this mode is FAST, but not as fast as mode 0.

c. PORepaint=2

- This mode tells WinCE to not save the main display data on suspend, and causes WinCE to REPAINT the main display on resume.
- This mode is used if display memory power is going to be turned off when the system is suspended, and there is not enough system memory to save the image.
- Any off-screen data in display memory is LOST, and since there is insufficient system memory to save display data, off-screen memory usage MUST be disabled.
- When the system is resumed, WinCE instructs all running applications to repaint themselves. This is the SLOWEST of the three modes.

Simple Display Driver Configuration

The following display driver configuration should work with most platforms running Windows CE. This configuration disables the use of off-screen display memory and forces the system to redraw the main display upon power-on.

1. This step disables the use of off-screen display memory.
   Edit the file x:\wince300\platform\cepc\drivers\display\S1D13505\sources and change the line

   CDEFINES=$(CDEFINES) -DEnablePreferVmem

   to

   #CDEFINES=$(CDEFINES) -DEnablePreferVmem

2. This step causes the system to redraw the main display upon power-on. This step is only required if display memory loses power when Windows CE is shut down. If display memory is kept powered up (set the S1D13505 in powersave mode), then the display data will be maintained and this step can be skipped.

   Search for the file PROJECT.REG in your Windows CE directories, and inside PROJECT.REG find the key PORepaint. Change PORepaint as follows:

   “PORepaint”=dword:2

Comments

- The display driver is CPU independent, allowing use of the driver for several Windows CE Platform Builder supported platforms.
- If you are running 13505CFG.EXE to produce multiple MODE tables, make sure you change the Mode Number in the WinCE tab for each mode table you generate. The display driver supports multiple mode tables, but only if each mode table has a unique mode number.
- At this time, the drivers have been tested on the x86 CPUs and have been built with Platform Builder v3.00.

EPSON®

S1D13505 Embedded RAMDAC LCD/CRT Controller

SDU1355B0C Rev. 1.0 ISA Bus Evaluation Board User Manual

Document Number: X23A-G-004-05

Copyright © 2001 Epson Research and Development, Inc. All Rights Reserved.

Information in this document is subject to change without notice. You may download and use this document, but only for your own use in evaluating Seiko Epson/EPSON products. You may not modify the document. Epson Research and Development, Inc. disclaims any representation that the contents of this document are accurate or current. The Programs/Technologies described in this document may contain material protected under U.S. and/or International Patent laws.
EPSON is a registered trademark of Seiko Epson Corporation. All other trademarks are the property of their respective owners.

THIS PAGE LEFT BLANK

Table of Contents

1 Introduction 7
1.1 Features 7
2 Installation and Configuration 8
3 LCD Interface Pin Mapping 9
4 CPU/Bus Interface Connector Pinouts 10
5 Host Bus Interface Pin Mapping 12
6 Technical Description 13
6.1 ISA Bus Support 13
6.2 Non-ISA Bus Support 13
6.3 DRAM Support 14
6.4 Decode Logic 14
6.5 Clock Input Support 14
6.6 Monochrome LCD Panel Support 14
6.7 Color Passive LCD Panel Support 14
6.8 Color TFT/D-TFD LCD Panel Support 15
6.9 CRT Support 15
6.10 Power Save Modes 15
6.11 Adjustable LCD Panel Negative Power Supply 15
6.12 Adjustable LCD Panel Positive Power Supply 15
6.13 CPU/Bus Interface Header Strips 16
6.14 Schematic Notes 16
7 Parts List 17
8 Schematic Diagrams 19

THIS PAGE LEFT BLANK

List of Tables

Table 2-1: Configuration DIP Switch Settings 8
Table 2-2: Host Bus Selection 8
Table 2-3: Jumper Settings 8
Table 3-1: LCD Signal Connector (J6) 9
Table 4-1: CPU/BUS Connector (H1) Pinout 10
Table 4-2: CPU/BUS Connector (H2) Pinout 11
Table 5-1: CPU Interface Pin Mapping 12

List of Figures

Figure 1: S1D13505B00C Schematic Diagram (1 of 4) 19
Figure 2: S1D13505B00C Schematic Diagram (2 of 4) 20
Figure 3: S1D13505B00C Schematic Diagram (3 of 4) 21
Figure 4: S1D13505B00C Schematic Diagram (4 of 4) 22

THIS PAGE LEFT BLANK

1 Introduction

This manual describes the setup and operation of the S5U13505B00C Rev. 1.0 Evaluation Board. Implemented using the S1D13505 Embedded RAMDAC LCD/CRT Controller, the S5U13505B00C is designed for the ISA bus environment. It also provides CPU/Bus interface connectors for non-ISA bus support.

For more information regarding the S1D13505, refer to the S1D13505 Hardware Functional Specification, document number X23A-A-001-xx.

1.1 Features

- 128-pin QFP15 surface mount package.
- SMT technology for all appropriate devices.
- 4/8-bit monochrome passive LCD panel support.
- 4/8/16-bit color passive LCD panel support.
- 9/12/18-bit LCD TFT/D-TFD panel support.
- Embedded RAMDAC for CRT support.
- 16-bit ISA bus support.
- Oscillator support for CLKI (up to 40.0MHz).
- 5.0V 1M x 16 EDO-DRAM (2M byte).
- Support for software and hardware suspend modes.
- On-board adjustable LCD bias power supply (+24..38V or -24..14V).
- CPU/Bus interface header strips for non-ISA bus support.

2 Installation and Configuration

The S1D13505 has 16 configuration inputs MD[15:0] which are read on the rising edge of RESET#. Inputs MD[5:1] are fully configurable on this evaluation board for different host bus selections; one eight-position DIP switch is provided for this purpose. All remaining configuration inputs are hard-wired. See the S1D13505 Hardware Functional Specification, document number X23A-A-001-xx for more information.

The following settings are recommended when using the S5U13505B00C with the ISA bus.

Table 2-1: Configuration DIP Switch Settings

Switch	Signal	Closed (1)	Open (0)
SW1-1	MD1	See “Host Bus Selection” table below	See “Host Bus Selection” table below
SW1-2	MD2		
SW1-3	MD3		
SW1-4	MD4	Little Endian	Big Endian
SW1-5	MD5	Wait# signal is active high	Wait# signal is active low
SW1-6	MD13	Reserved	
SW1-7	MD14		
SW1-8	MD15		

Table 2-2: Host Bus Selection

MD3 / SW1-3	MD2 / SW1-2	MD1 / SW1-1	Host Bus Interface
open (0)	open (0)	open (0)	SH-3/SH-4 bus interface
open (0)	open (0)	closed (1)	MC68K bus 1 interface (e.g. MC68000)
open (0)	closed (1)	open (0)	MC68K bus 2 interface (e.g. MC68030)
open (0)	closed (1)	closed (1)	Generic bus interface
closed (1)	open (0)	open (0)	Reserved
closed (1)	open (0)	closed (1)	MIPS/ISA
closed (1)	closed (1)	open (0)	PowerPC
closed (1)	closed (1)	closed (1)	PC Card (PCMCIA)

= recommended settings (configured for ISA bus support)

Table 2-3: Jumper Settings

	Description	1-2	2-3
JP1	DRDY (pin 76, S1D13505)	Pin 76 connected to J6 pin 38	Pin 76 connected to J6 pin 35
JP2	LCD V_{DD} Selection	5.0V LCD driver V_{DD}	3.3V LCD driver V_{DD}

Note

JP1 is for internal use only, default setting is 1-2.

3 LCD Interface Pin Mapping

Table 3-1: LCD Signal Connector (J6)

S1D13505 Pin Names	Connector Pin No.	Color TFT/D-TFD			Color Passive			Mono Passive	
		9-bit	12-bit	18-bit	4-bit	8-bit	16-bit	4-bit	8-bit
FPDAT0	1	R2	R3	R5		LD0	LD0		LD0
FPDAT1	3	R1	R2	R4		LD1	LD1		LD1
FPDAT2	5	R0	R1	R3		LD2	LD2		LD2
FPDAT3	7	G2	G3	G5		LD3	LD3		LD3
FPDAT4	9	G1	G2	G4	UD0	UD0	UD0	UD0	UD0
FPDAT5	11	G0	G1	G3	UD1	UD1	UD1	UD1	UD1
FPDAT6	13	B2	B3	B5	UD2	UD2	UD2	UD2	UD2
FPDAT7	15	B1	B2	B4	UD3	UD3	UD3	UD3	UD3
FPDAT8	17	B0	B1	B3			LD4		
FPDAT9	19		R0	R2			LD5		
FPDAT10	21			R1			LD6		
FPDAT11	23		G0	G2			LD7		
FPDAT12	25			G1			UD4		
FPDAT13	27			G0			UD5		
FPDAT14	29		B0	B2			UD6		
FPDAT15	31			B1			UD7		
FPSHIFT	33	FPSHIFT							
DRDY	35					FPSHIFT2			
FPLINE	37	FPLINE							
FPFRAME	39	FPFRAME							
GND	2-26 (Even Pins)	GND							
N/C	28								
VEEH	30	Adjustable -24..-14V negative LCD bias							
LCDVCC	32	Jumper selectable +3.3V/+5V							
+12V	34	+12V							
VDDH	36	Adjustable +15..+38V positive LCD bias							
DRDY	38	DRDY			MOD	FPSHIFT2	MOD		
LCDPWR#	40	LCDPWR#							

4 CPU/Bus Interface Connector Pinouts

Table 4-1: CPU/BUS Connector (H1) Pinout

Connector Pin No.	Comments
1	Connected to DB0 of the S1D13505
2	Connected to DB1 of the S1D13505
3	Connected to DB2 of the S1D13505
4	Connected to DB3 of the S1D13505
5	Ground
6	Ground
7	Connected to DB4 of the S1D13505
8	Connected to DB5 of the S1D13505
9	Connected to DB6 of the S1D13505
10	Connected to DB7 of the S1D13505
11	Ground
12	Ground
13	Connected to DB8 of the S1D13505
14	Connected to DB9 of the S1D13505
15	Connected to DB10 of the S1D13505
16	Connected to DB11 of the S1D13505
17	Ground
18	Ground
19	Connected to DB12 of the S1D13505
20	Connected to DB13 of the S1D13505
21	Connected to DB14 of the S1D13505
22	Connected to DB15 of the S1D13505
23	Connected to RESET# of the S1D13505
24	Ground
25	Ground
26	Ground
27	+12 volt supply
28	+12 volt supply
29	Connected to WE0# of the S1D13505
30	Connected to WAIT# of the S1D13505
31	Connected to CS# of the S1D13505
32	Connected to MR# of the S1D13505
33	Connected to WE1# of the S1D13505
34	Not connected

Table 4-2: CPU/BUS Connector (H2) Pinout

Connector Pin No.	Comments
1	Connected to AB0 of the S1D13505
2	Connected to AB1 of the S1D13505
3	Connected to AB2 of the S1D13505
4	Connected to AB3 of the S1D13505
5	Connected to AB4 of the S1D13505
6	Connected to AB5 of the S1D13505
7	Connected to AB6 of the S1D13505
8	Connected to AB7 of the S1D13505
9	Ground
10	Ground
11	Connected to AB8 of the S1D13505
12	Connected to AB9 of the S1D13505
13	Connected to AB10 of the S1D13505
14	Connected to AB11 of the S1D13505
15	Connected to AB12 of the S1D13505
16	Connected to AB13 of the S1D13505
17	Ground
18	Ground
19	Connected to AB14 of the S1D13505
20	Connected to AB14 of the S1D13505
21	Connected to AB16 of the S1D13505
22	Connected to AB17 of the S1D13505
23	Connected to AB18 of the S1D13505
24	Connected to AB19 of the S1D13505
25	Ground
26	Ground
27	+5 volt supply
28	+5 volt supply
29	Connected to RD/WR# of the S1D13505
30	Connected to BS# of the S1D13505
31	Connected to BUSCLK of the S1D13505
32	Connected to RD# of the S1D13505
33	Connected to AB20 of the S1D13505
34	Not connected

5 Host Bus Interface Pin Mapping

Table 5-1: CPU Interface Pin Mapping

S1D13505 Pin Names	SH-3	SH-4	MC68K Bus 1	MC68K Bus 2	Generic	MIPS/ISA	PowerPC	PCMCIA
AB20	A20	A20	A20	A20	A20	LatchA20	A11	A20
AB[16:13]	A[19:13]	A[19:13]	A[19:13]	A[19:13]	A[19:13]	SA[19:13]	A[12:18]	A[19:13]
AB[12:1]	A[12:1]	A[12:1]	A[12:1]	A[12:1]	A[12:1]	SA[12:1]	A[19:30]	A[12:1]
AB0	A0	A0	LDS#	A0	A0	SA0	A31	A0
DB[15:0]	D[15:0]	D[15:0]	D[15:0]	D[31:16]	D[15:0]	SD[15:0]	D[0:15]	D[15:0]
WE1#	WE1#	WE1#	UDS#	DS#	WE1#	SBHE#	BI#	-CE2
M/R#	External Decode							
CS#	External Decode							
BUSCLK	CKIO	CKIO	CLK	CLK	BCLK	CLK	CLKOUT	CLKI
BS#	BS#	BS#	AS#	AS#	V_{DD}	V_{DD}	TS#	V_{DD}
RD/WR#	RD/WR#	RD/WR#	R/W#	R/W#	RD1#	V_{DD}	RD/WR#	-CE1
RD#	RD#	RD#	V_{DD}	SIZ1	RD0#	MEMR#	TSIZ0	-OE
WE0#	WE0#	WE0#	V_{DD}	SIZ0	WE0#	MEMW#	TSIZ1	-WE
WAIT#	WAIT#	RDY	DTACK#	DSACK1#	WAIT#	IOCHRDY	TA#	-WAIT
RESET#	RESET#	RESET#	RESET#	RESET#	RESET#	inverted RESET	RESET#	inverted RESET

6 Technical Description

6.1 ISA Bus Support

The S5U13505B00C directly supports the 16-bit ISA bus environment. All the configuration options [MD15:0] are either hard-wired or selectable through the eight-position DIP Switch S1. Refer to Table 2-1 “Configuration DIP Switch Settings” on page 8 for details.

Note

1. This evaluation board supports a 16-bit ISA bus only.

2. The S1D13505 is a memory-mapped device with 2M bytes of linear addressed display buffer and a separate 47 byte register space. On the S5U13505B00C, the S1D13505 2M byte display buffer has been mapped to a start address of C00000h and the registers have been mapped to a start address of E00000h.

3. When using this board in a PC environment, system memory must be limited to 12M bytes, to prevent the system addresses will conflict with the S1D13505 display buffer/register addresses.

4. The hardware suspend enable/disable address is at location F00000h. A read to this location will enable the hardware suspend, a write to the same location will disable it.

Note

Due to backwards compatibility with the S5U13505B00B Evaluation Board, which supports both an 8 and a 16-bit CPU interface, third party software ***must*** perform a write at address F80000h in order to enable a 16-bit ISA environment. This must be done prior to initializing the S1D13505. Failure to do so will result in the S1D13505 being configured as a 16-bit device (default, power-up), with the ISA Bus interface (supported through the PAL (U4)) configured for an 8-bit
interface.

The Epson supplied software performs this function automatically.

6.2 Non-ISA Bus Support

This evaluation board is specifically designed to support the standard 16-bit ISA bus. However, the S1D13505 directly supports many other host bus interfaces. Header strips H1 and H2 have been provided and contain all the necessary I/O pins to interface to these buses. See, Section 4 “CPU/Bus Interface Connector Pinouts” on page 10, Table 2-1 “Configuration DIP Switch Settings” on page 8, and Table 2-3 “Jumper Settings” on page 8, for details.

When using the header strips to provide the bus interface observe the following:

- All I/O signals on the ISA bus card edge must be isolated from the ISA bus (do not plug the card into a computer). Voltage lines are provided on the header strips.
- For the ISA bus, a 22V10 PAL (U4, socketed) is currently used to provide the S1D13505 CS# (pin 4), M/R# (pin 5) and other decode logic signals. This functionality must now be provided externally. Remove the PAL from its socket to eliminate conflicts resulting from two different outputs driving the same input. Refer to Table 2-2 “Host Bus Selection” on page 8 for connection details.

6.3 DRAM Support

The S1D13505 supports 256K x 16 as well as 1M x 16 FPM/EDO-DRAM in symmetrical and asymmetrical formats.

The S5U13505B00C board supports a 5.0V 1M x 16 symmetrical EDO-DRAM (42-pin SOJ package). This provides a 2M byte display buffer.

6.4 Decode Logic

This board utilizes the MIPS/ISA Interface of the S1D13505 (see the S1D13505 Hardware Functional Specification, document number X23A-A-001-xx).

All required decode logic is provided through a 22V10 PAL (U4, socketed).

6.5 Clock Input Support

The S1D13505 supports up to a 40.0Mhz input clock frequency. A 40.0MHz oscillator (U2, socketed) is provided on the S5U13505 board as the clock (CLKI) source.

6.6 Monochrome LCD Panel Support

The S1D13505 supports 4 and 8-bit, dual and single, monochrome passive LCD panels. All necessary signals are provided on the 40-pin ribbon cable header J6. The interface signals on the cable are alternated with grounds to reduce crosstalk and noise.

Refer to Table 3-1 “LCD Signal Connector (J6)” on page 9 for connection information.

6.7 Color Passive LCD Panel Support

The S1D13505 directly supports 4, 8 and 16-bit, dual and single, color passive LCD panels. All the necessary signals are provided on the 40-pin ribbon cable header J6. The interface signals on the cable are alternated with grounds to reduce crosstalk and noise.

Refer to Table 3-1 “LCD Signal Connector (J6)” on page 9 for connection information.

6.8 Color TFT/D-TFD LCD Panel Support

The S1D13505 supports 9, 12 and 18-bit active matrix color TFT/D-TFD panels. All the necessary signals can also be found on the 40-pin LCD connector J6. The interface signals on the cable are alternated with grounds to reduce crosstalk and noise.

When supporting an 18-bit TFT/D-TFD panel, the S1D13505 can display 64K of a possible 256K colors. A maximum 16 of the possible 18 bits of LCD data are available from the S1D13505. Refer to the S1D13505 Hardware Functional Specification, document number X23A-A-001-xx for details.

Refer to Table 3-1 “LCD Signal Connector (J6)” on page 9 for connection information.

6.9 CRT Support

This evaluation board provides CRT support through the S1D13505’s embedded RAMDAC. Refer to the S1D13505 Hardware Functional Specification, document number X23A-A-001-xx for details.

6.10 Power Save Modes

The S1D13505 supports one hardware suspend and one software suspend Power Save Mode.

The software suspend mode is controlled by the utility 13505PWR Software Suspend Power Sequencing.

The hardware suspend mode can be enabled by a memory read to location F00000h. A memory write to the same location will disable it.

6.11 Adjustable LCD Panel Negative Power Supply

Most monochrome passive LCD panels require a negative power supply to provide between -18V and -23V (I_{out}=45mA). For ease of implementation, such a power supply has been provided as an integral part of this design. The signal VLCD can be adjusted by R29 to supply an output voltage from -14V to -23V and is enabled/disabled by the S1D13505 control signal LCDPWR#.

Determine the panel’s specific power requirements and set the potentiometer accordingly before connecting the panel.

6.12 Adjustable LCD Panel Positive Power Supply

Most passive LCD passive color panels and most single monochrome 640x480 passive LCD panels require a positive power supply to provide between +23V and +40V (I_{out}=45mA). For ease of implementation, such a power supply has been provided as an integral part of this design. The signal VDDH can be adjusted by R23 to provide an output voltage from +23V to +40V and is enabled/disabled by the S1D13505 control signal LCDPWR#.

Determine the panel’s specific power requirements and set the potentiometer accordingly before connecting the panel.

6.13 CPU/Bus Interface Header Strips

All of the CPU/Bus interface pins of the S1D13505 are connected to the header strips H1 and H2 for easy interface to a CPU, or bus other than ISA.

Refer to Table 4-1 “CPU/BUS Connector (H1) Pinout” on page 10 and Table 4-2 “CPU/BUS Connector (H2) Pinout” on page 11 for specific settings.

Note

These headers only provide the CPU/Bus interface signals from the S1D13505. When another host bus interface is selected through [MD3:1] configuration, appropriate external decode logic MUST be used to access the S1D13505. See the section “Host Bus Interface Pin Mapping” of the S1D13505 Hardware Functional Specification, document number X23A-A-001-xx.

6.14 Schematic Notes

The following schematics are for reference only and may not reflect actual implementation. Please request updated information before starting any hardware design.

7 Parts List

Item #	Qty/board	Designation	Part Value	Description
1	16	C1,C2,C3,C4,C5,C6,C7,C10,C11, C12,C13,C18,C25,C27,C28,C29	0.1uF	0805 ceramic capacitor
2	1	C8	0.01uF	0805 ceramic capacitor
3	2	C9,C30	1uF 6V	Tantalum capacitor size A
4	2	C14,C19	47uF 6V	Tantalum capacitor size D
5	3	C15,C16,C17	4.7uF 50V	Tantalum capacitor size D
6	1	C20	56uF 35V	Low-ESR electrolytic
7	4	C21,C22,C23,C24	4.7uF 16V	Tantalum capacitor size B
9	3	D1,D2,D3	BAV99	Signal diode
10	2	H1,H2	HEADER 17X2	
11	2	JP1,JP2	HEADER 3	
12	1	J1	VGA connector	
13	1	J2	AT CON-A	
14	1	J3	AT CON-B	
15	1	J4	AT CON-C	
16	1	J5	AT CON-D	
17	1	J6	CON40A	
18	6	L1,L2,L3,L4,L5,L7	Ferrite bead	Philips BDS3/3/8.9-4S2
19	1	L6	Inductor 1µH	
20	2	Q1,Q3”	MMBT2222A	
21	1	Q2	MMBT2907A	
22	10	R1,R2,R21,R26,R30,R31,R32,R33,R 34,R35	10K	0805 resistor
23	2	R3,R4	39 Ohms	0805 resistor
24	3	R5,R6,R7	150 1%	0805 resistor
25	1	R8	2.8K 1%	0805 resistor
26	1	R9	1K 1%	0805 resistor
27	1	R10	140 1%	0805 resistor
28	10	R11,R12,R13,R14,R15,R16,R17,R18, R19,R20	15K	0805 resistor
29	1	R22	470K	0805 resistor
30	1	R23	200K Pot.	
31	1	R24	14K	0805 resistor
32	1	R25	4.7K	0805 resistor
33	2	R28,R27	100K	0805 resistor
34	1	R29	100K Pot.	
35	1	S1	SW DIP-8	
36	1	U1	S1D13505F00A	
37	1	U2	40MHz oscillator	

Item #	Qty/board	Designation	Part Value	Description
38	1	U3	MT4C1M16E5DJS-5	50ns self-refresh EDO DRAM
39	1	U4	PAL22V10-15	
40	1	U5	RD-0412	Xentek RD-0412
41	1	U6	EPN001	Xentek EPN001
42	3	U7,U8,U9	74AHC244	
43	1	U10	LT1117CM-3.3	“5V to 3.3V regulator, 800mA”

8 Schematic Diagrams

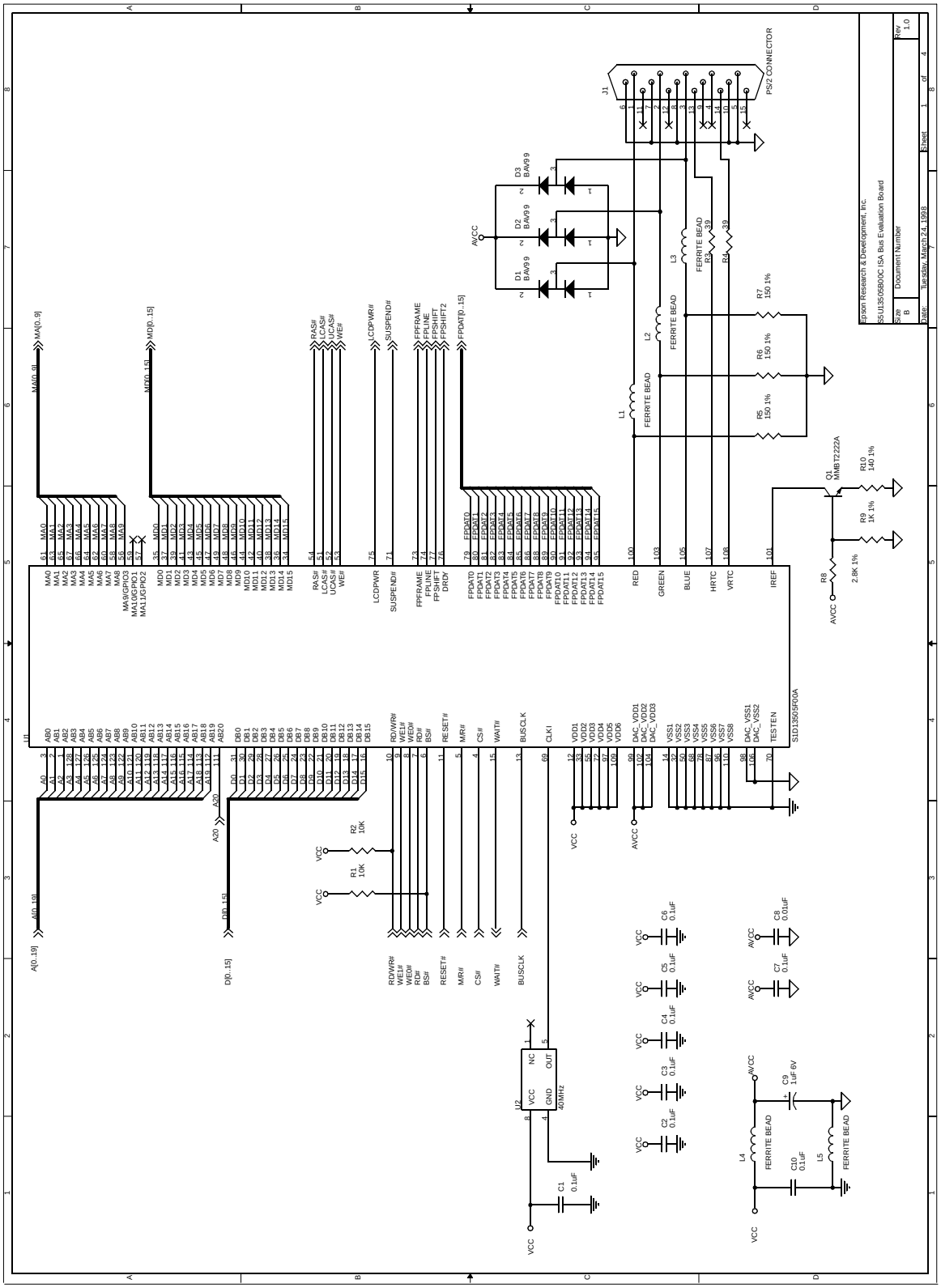

Figure 1: S1D13505B00C Schematic Diagram (1 of 4)

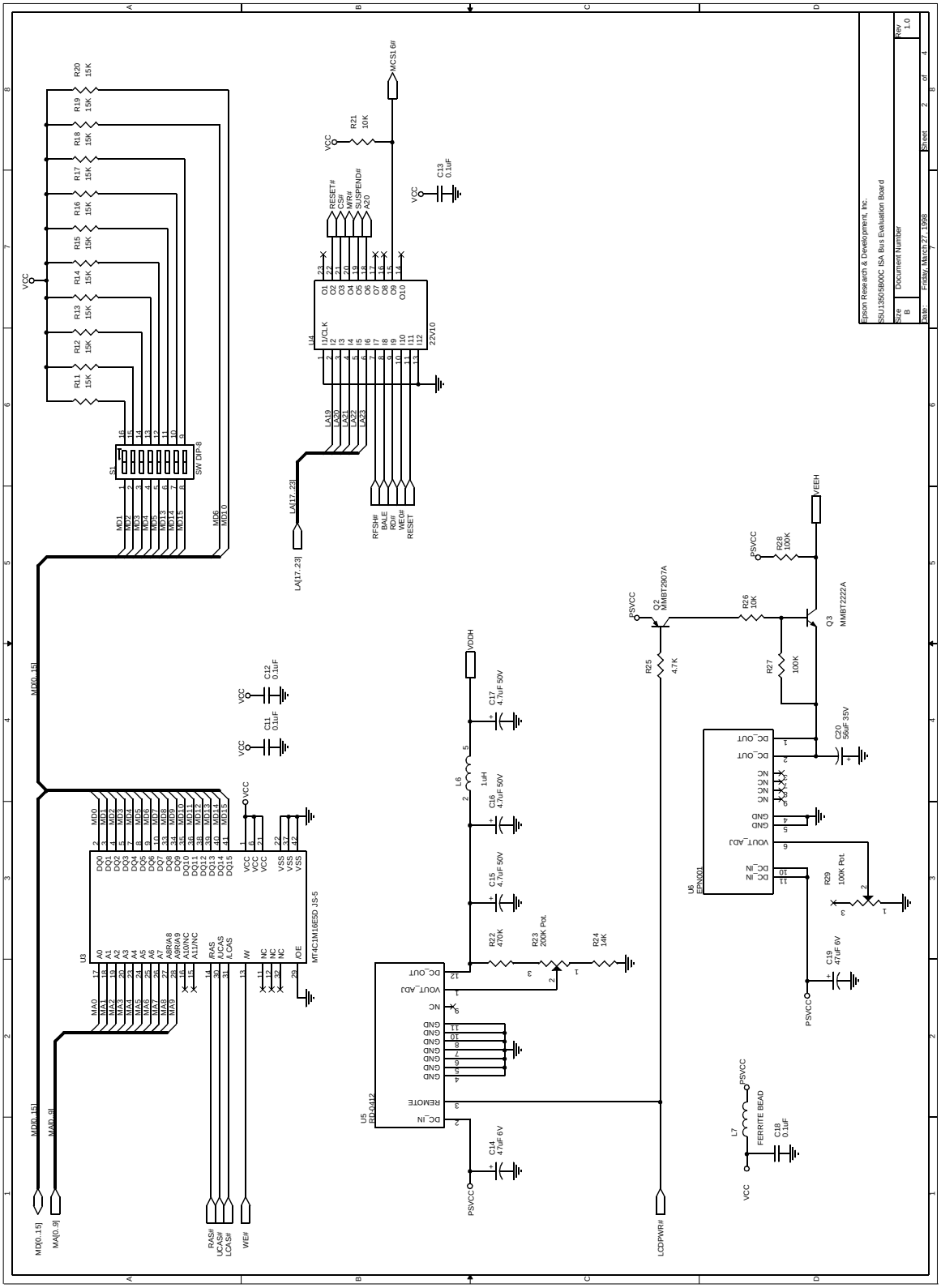

Figure 2: S1D13505B00C Schematic Diagram (2 of 4)

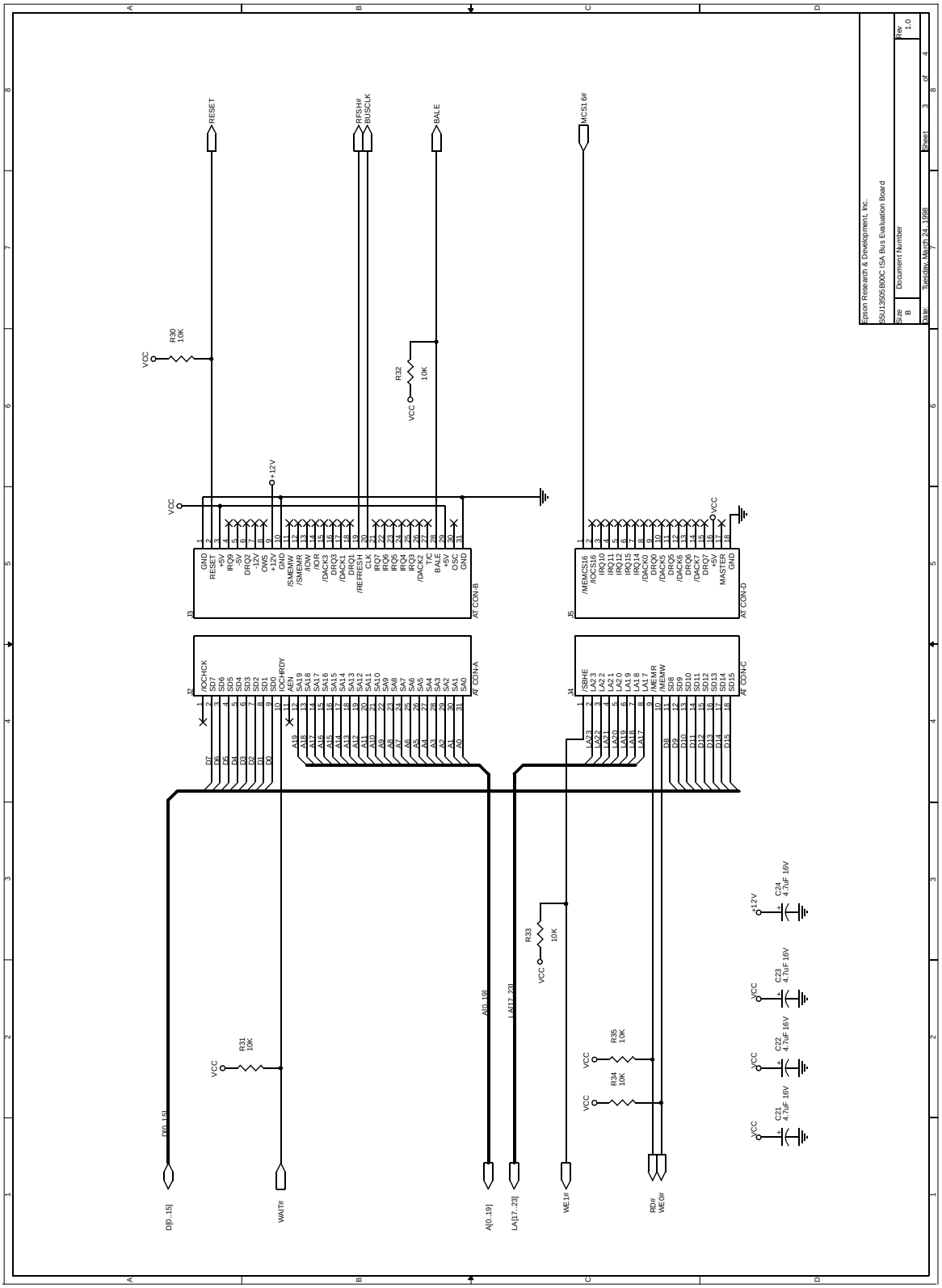

Figure 3: S1D13505B00C Schematic Diagram (3 of 4)

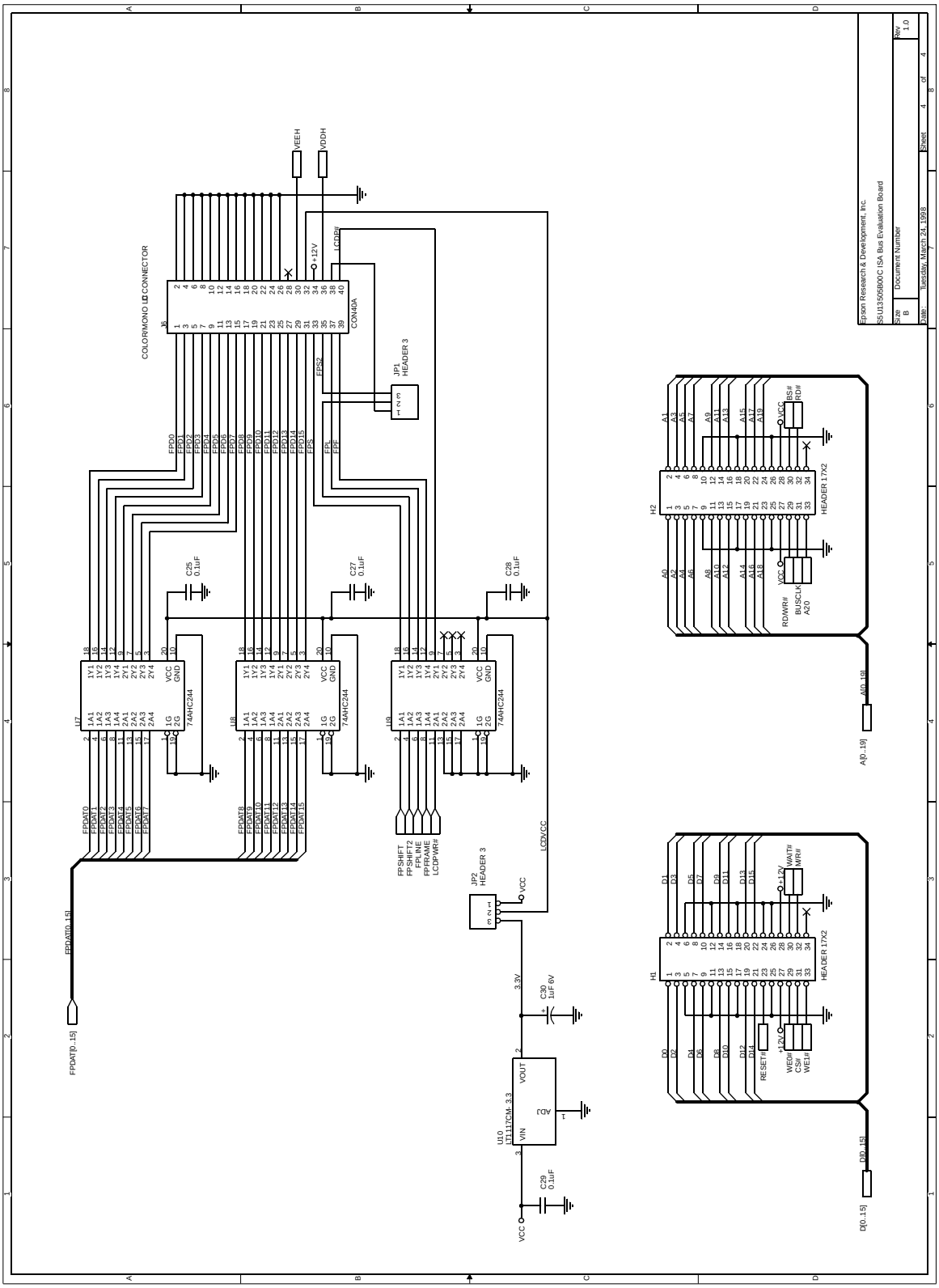

Figure 4: S1D13505B00C Schematic Diagram (4 of 4)

THIS PAGE LEFT BLANK

EPSON®

S5U13505-D9000

Evaluation Board User Manual

Document Number: X23A-G-002-04

Copyright © 2001 Epson Research and Development, Inc. All Rights Reserved.

Information in this document is subject to change without notice. You may download and use this document, but only for your own use in evaluating Seiko Epson/EPSON products. You may not modify the document. Epson Research and Development, Inc. disclaims any representation that the contents of this document are accurate or current. The Programs/Technologies described in this document may contain material protected under U.S. and/or International Patent laws.
EPSON is a registered trademark of Seiko Epson Corporation. All other trademarks are the property of their respective owners
Microsoft and Windows are registered trademarks of Microsoft Corporation.

THIS PAGE LEFT BLANK

Table of Contents

1 Introduction 7
2 Features 8
2.1 S1D13505 Embedded RAMDAC LCD/CRT Controller 8
2.1.1 Display Buffer 8
2.1.2 LCD Display Support 9
2.1.3 Touchscreen Support 11
2.1.4 CRT Support 11
2.1.5 Jumper Selection 11
2.1.6 Adjustable LCD BIAS Power Supply 11
3 D9000 Specifics 13
3.1 Interface Signals 13
3.1.1 Connector Pinout for Channel A6 and A7 13
3.1.2 Memory Address (CS#, M/R#) Decoding 17
3.2 FPGA Code Functionality 17
3.3 Board Dimensions 17
4 Parts List 18
5 Schematic Diagrams 19
6 Component Placement 22

THIS PAGE LEFT BLANK

List of Tables

Table 2-1: LCD Connector Pinout 10
Table 2-2: Touchscreen Header (TS1) Pinout 11
Table 2-3: Touchscreen Header Pinout 11
Table 3-1: Connectors Pinout for Channel A7 13
Table 3-2: Connectors Pinout for Channel A6 15

List of Figures

Figure 5-1: S5U13505-D9000 Schematic Diagram (1 of 3). 19
Figure 5-2: S5U13505-D9000 Schematic Diagram (2 of 3). 20
Figure 5-3: S5U13505-D9000 Schematic Diagram (3 of 3). 21
Figure 6-1: Component Placement. 22

THIS PAGE LEFT BLANK

1 Introduction

The Hitachi D9000 Development System/Microsoft Windows® CE ODO Reference Platform uses expansion boards to interface peripherals to the FPGA/processor combination. This manual describes how the S5U13505-D9000 Evaluation Board is used to provide a color LCD/CRT solution for the Windows CE environment.

Reference

S1D13505 Hardware Functional Specification, document number X23A-A-001-xx.

D9000 Development System, Hardware User Manual - Hitachi.

2 Features

- S1D13505 Embedded RAMDAC LCD/CRT controller.
  - 4/8-bit monochrome or 4/8/16-bit color LCD interface for single-panel, single-drive displays.
  - 8-bit monochrome or 8/16-bit color LCD interface for dual-panel, dual-drive displays.
  - Direct support for 9/12-bit TFT/D-TFD; 18-bit TFT/D-TFD is supported to 64K colors (16-bit data).
  - Direct CRT support to 64K colors using the S1D13505 embedded RAMDAC.
  - Up to 16 shades of gray using Frame Rate Modulation (FRM) on monochrome passive LCD panels.
  - Up to 4096 colors on color passive LCD panels; three 256x4 Look-Up Tables (LUT) are used to map 1/2/4/8 bpp modes into these colors, 15/16 bpp modes are mapped directly using the four most significant bits of the red, green and blue colors.
  - Up to 64K colors on TFT/D-TFD and CRT; three 256x4 Look-Up Tables are used to map 1/2/4/8 bpp modes into 4096 colors, 15/16 bpp modes are mapped directly.
- On-board 2M byte EDO-DRAM display buffer.
- On-board adjustable LCD bias voltage power supply.
- SmallTypeZ x 2 form factor (requires two side-by-side SmallTypeZ slots).

2.1 S1D13505 Embedded RAMDAC LCD/CRT Controller

The S1D13505 is a low cost, low power, color/monochrome LCD/CRT controller with an embedded RAMDAC capable of interfacing to a wide range of CPUs and LCD displays.

The S1D13505 supports LCD interfaces with data widths up to 16-bits. Using Frame Rate Modulation (FRM), it can display 16 shades of gray on monochrome panels, up to 4096 colors on passive panels and 64K colors on active matrix TFT/D-TFD. CRT support is handled through the use of an embedded RAMDAC allowing simultaneous display of both the CRT and LCD displays.

In this design, the S1D13505 has a 3.3V supply voltage for both logic and the embedded RAMDAC.

For complete details on register functionality and programming, refer to the S1D13505 Hardware Functional Specification, document number X23A-A-001-xx, and the S1D13505 Programming Notes and Examples, document number X23A-G-003-xx.

2.1.1 Display Buffer

The S1D13505 supports a 512K byte or 2M byte FPM-DRAM or EDO-DRAM display buffer. On the S5U13505-D9000 evaluation board a 1Mx16 EDO-DRAM (2M byte) is used to provide memory for all supported display resolutions, and when smaller display sizes are used, to provide multiple “pages” of memory.

2.1.2 LCD Display Support

The S1D13505 provides a wide range of flexibility for display type and resolution. Display types include:

- 4/8-bit monochrome passive.
- 4/8/16-bit color passive.
- 9/12/18-bit Active matrix TFT/D-TFD.
- other (EL, REC, etc.).

Display resolutions range from 4x1 to 800x600, with color depths from black-and-white to 64K colors.

The LCD connector is a 2 x 20 pin, 0.100", straight header. Pinout assignment is shown in the following table “LCD Connector Pinout”.

Table 2-1: LCD Connector Pinout

Pin #	S1D13505F00A Pin Names	Color TFT/D-TFD			Color STN			Mono STN		Comments
		9-bit	12-bit	18-bit	4-bit	8-bit	16-bit	4-bit	8-bit	
1	FPDAT[0]	R2	R3	R5		LD0	LD0		LD0	
3	FPDAT[1]	R1	R2	R4		LD1	LD1		LD1	
5	FPDAT[2]	R0	R1	R3		LD2	LD2		LD2	
7	FPDAT[3]	G2	G3	G5		LD3	LD3		LD3	
9	FPDAT[4]	G1	G2	G4	UD0	UD0	UD0	UD0	UD0	
11	FPDAT[5]	G0	G1	G3	UD1	UD1	UD1	UD1	UD1	
13	FPDAT[6]	B2	B3	B5	UD2	UD2	UD2	UD2	UD2	
15	FPDAT[7]	B1	B2	B4	UD3	UD3	UD3	UD3	UD3	
17	FPDAT[8]	B0	B1	B3			LD4			
19	FPDAT[9]		R0	R2			LD5			
21	FPDAT[10]			R1			LD6			
23	FPDAT[11]		G0	G2			LD7			
25	FPDAT[12]			G1			UD4			
27	FPDAT[13]			G0			UD5			
29	FPDAT[14]		B0	B2			UD6			
31	FPDAT[15]			B1			UD7			
33	FPSHIFT	FPSHIFT								
35 or 38	DRDY	DRDY			MOD/FPSHIFT2					Jumper selectable
37	FPLINE	FPLINE								
39	FPFRAME	FPFRAME								
2, 4, 6, 8, 10, 12, 14, 16, 18, 20, 22, 24, 26	GND									
28	LCDBACK#									On/Off Control for Backlight
32	LCDVCC									Selectable 3.3V/5V
34	+12V									
36	VDDH									+30v LCD bias
40	LCDPWR#									On/Off Control for LCD Power

2.1.3 Touchscreen Support

If the LCD panel being used has an integrated Touchscreen, the touchscreen interface signals are connected to header strip TS1. These signals are then routed through JP3 and into the standard "Platform II Audio/Touch" peripheral board. Pinout assignment is described in the table below.

Table 2-2: Touchscreen Header (TS1) Pinout

Pin #	Signal
1	XR
2	XL
3	YU
4	YL
5	XY
6	GND

2.1.4 CRT Support

The S1D13505 has an embedded RAMDAC and provides complete one-chip CRT support. Refer to the Programmer's Notes and Examples, document number X23A-G-003-xx, for programming details.

2.1.5 Jumper Selection

Jumpers labelled LCDVCC1 and FPS2 provide LCD logic supply voltage and connector pinout options respectively. Jumper options are described in the table below.

Table 2-3: Touchscreen Header Pinout

Jumper	Function	1-2	2-3
LCDVCC1	LCD logic supply	3.3V	5V
FPS2	FPSHIFT2/DRDY/MOD	To pin 38	To pin 35

= default settings

Note

Setting the panel supply voltage to 5V does not affect the signalling voltage which remains at 3.3V.

2.1.6 Adjustable LCD BIAS Power Supply

Many color passive LCD panels require a positive power supply to provide the LCD BIAS voltage. Such a power supply has been provided as an integral part of this design. The signal VDDH can be adjusted by R16 to provide an output voltage from +24V to +38V (I_{out} = 45mA) and is enabled/disabled by the S1D13505 control signal LCDPWR.

LCDPWR is an output signal which follows a pre-defined power-up/power-down sequence designed to protect the LCD panel from damage caused by the power supply being enabled in the absence of control signals. Determine the panel's specific power requirements and set the potentiometer accordingly before connecting the panel.

3 D9000 Specifics

3.1 Interface Signals

The S5U13505-D9000 is designed to support the standard Register Interface of the Windows CE development platform together with the FPGA code that comes with the board.

3.1.1 Connector Pinout for Channel A6 and A7

Table 3-1: Connectors Pinout for Channel A7

Channel A7					
Pin #	**FPGA Signal**	**S1D13505 Signal**	**Pin #**	**FPGA Signal**	**S1D13505 Signal**
SmXY					
1	chA7p1	BCLK	21	dc5v	DC5V
2	chA7p2	N/C	22	GND	GND
3	chA7p3	N/C	23	dc3v	DC3V
4	chA7p4	N/C	24	GND	GND
5	chA7p5	N/C	25	dc3v	DC3V
6	chA7p6	N/C	26	GND	GND
7	chA7p7	N/C	27	dc3vs	N/C
8	chA7p8	N/C	28	GND	GND
9	chA7p9	N/C	29	dc12v	DC12V
10	chA7p10	N/C	30	GND	GND
11	ib8	N/C	31	battery	N/C
12	ib7	N/C	32	GND	GND
13	ib6	N/C	33	dcXA	N/C
14	ib5	N/C	34	base5vDc	N/C
15	ib4	N/C	35	dcXB	N/C
16	ib3	N/C	36	GND	GND
17	ib2	N/C	37	dcXC	N/C
18	ib1	N/C	38	GND	GND
19	GND	GND	39	senseH	N/C
20	GND	GND	40	senseL	N/C

Table 3-1: Connectors Pinout for Channel A7 (Continued)

Channel A7					
Pin #	**FPGA Signal**	**S1D13505 Signal**	**Pin #**	**FPGA Signal**	**S1D13505 Signal**
SmZ					
1	chA7p11	N/C	21	GND	GND
2	chA7p12	N/C	22	GND	GND
3	chA7p13	A20	23	chA7p34	A19
4	chA7p14	A18	24	GND	GND
5	chA7p15	A17	25	GND	GND
6	chA7p16	A16	26	GND	GND
7	chA7p17	N/C	27	chA7p33	A15
8	chA7p18	A14	28	GND	GND
9	chA7p19	A13	29	GND	GND
10	chA7p20	A12	30	GND	GND
11	chA7p21	A11	31	chA7p32	A10
12	chA7p22	A9	32	GND	GND
13	chA7p23	A8	33	GND	GND
14	chA7p24	A7	34	GND	GND
15	chA7p25	A6	35	GND	GND
16	chA7p26	A5	36	chA7p31	A4
17	chA7p27	A3	37	GND	GND
18	chA7p28	A2	38	GND	GND
19	chA7p29	A1	39	GND	GND
20	chA7p30	A0	40	GND	GND

Table 3-2: Connectors Pinout for Channel A6

Channel A6					
Pin #	**FPGA Signal**	**S1D13505 Signal**	**Pin #**	**FPGA Signal**	**S1D13505 Signal**
SmXY					
1	chA6p1	CS#	21	dc5v	DC5V
2	chA6p2	BS#	22	GND	GND
3	chA6p3	WE0#	23	dc3v	DC3V
4	chA6p4	RD/WR#	24	GND	GND
5	chA6p5	WAIT#	25	dc3v	DC3V
6	chA6p6	N/C	26	GND	GND
7	chA6p7	N/C	27	dc3vs	N/C
8	chA6p8	N/C	28	GND	GND
9	chA6p9	N/C	29	dc12v	DC12V
10	chA6p10	N/C	30	GND	GND
11	ib1	XL	31	battery	N/C
12	ib2	XR	32	GND	GND
13	ib3	YU	33	dcXA	N/C
14	ib4	YL	34	base5vDc	N/C
15	ib5	N/C	35	dcXB	N/C
16	ib6	N/C	36	GND	GND
17	ib7	N/C	37	dcXC	N/C
18	ib8	XY	38	GND	GND
19	GND	GND	39	senseH	N/C
20	GND	GND	40	senseL	N/C

Table 3-2: Connectors Pinout for Channel A6 (Continued)

Channel A6					
Pin #	**FPGA Signal**	**S1D13505 Signal**	**Pin #**	**FPGA Signal**	**S1D13505 Signal**
SmZ					
1	chA6p11	M/R#	21	GND	GND
2	chA6p12	RD#	22	GND	GND
3	chA6p13	WE1#	23	chA6p34	N/C
4	chA6p14	RESET#	24	GND	GND
5	chA6p15	N/C	25	GND	GND
6	chA6p16	N/C	26	GND	GND
7	chA6p17	N/C	27	chA6p33	D15
8	chA6p18	D14	28	GND	GND
9	chA6p19	D13	29	GND	GND
10	chA6p20	D12	30	GND	GND
11	chA6p21	D11	31	chA6p32	D10
12	chA6p22	D9	32	GND	GND
13	chA6p23	D8	33	GND	GND
14	chA6p24	D7	34	GND	GND
15	chA6p25	D6	35	GND	GND
16	chA6p26	D5	36	chA6p31	D4
17	chA6p27	D3	37	GND	GND
18	chA6p28	D2	38	GND	GND
19	chA6p29	D1	39	GND	GND
20	chA6p30	D0	40	GND	GND

3.1.2 Memory Address (CS#, M/R#) Decoding

The S1D13505 is a memory-mapped device for both the registers and the display buffer access. The specific memory address is solely controlled by the CS# and M/R# decode logic. The memory space requirements are:

- A 2M byte linear address range for the display buffer.
- 47 bytes for the registers.

With the FPGA code that comes with this board, the registers are located at 0x12000000 and the display buffer is located at 0x12200000.

3.2 FPGA Code Functionality

The D9000/ODO is a flexible hardware/software development system designed for use with the Microsoft Windows CE operating system. It is designed so that an arbitrary set of peripherals may be quickly compiled in a way that is identical to the final product. A 100K FPGA is at the center of the system and sits between the CPU and all other peripherals. Most peripherals, except analog components, are implemented within the FPGA.

In order to support several different CPUs, any peripherals that connect to the system have to use a common Register Interface. This interface is similar to a standard bus, in that it allows the CPU to read and write registers associated with the peripheral. For each peripheral, whether implemented internal or external to the FPGA, a VHDL module has to be written to implement the register interface and to assign the necessary signals to the slot where the peripheral is going to be located.

The D9000/ODO platform supports 32-bit accesses to peripherals. The S1D13505 provides a 16-bt CPU interface, and therefore, the FPGA files provided with the S5U13505-D9000 convert any 32-bit accesses to back-to-back 16-bit cycles.

3.3 Board Dimensions

To obtain the required number of interface signals, the S5U13505-D9000 utilizes two SmallTypeZ slots (6 and 7). Board dimensions are 2.65 x 3.20cm with both the CRT and LCD connectors accessible on the outside edge.

4 Parts List

Item #	Qty	Reference	Part	Description
1	20	C1,C2,C3,C4,C5,C6,C7, C8,C9,C11,C21,C26,C27,C29, C34,C35,C37,C38, C39,C40	0.1uF	0.1uF ceramic capacitor
2	5	C10,C24,C25,C32,C33	10uF	10uF tantalum capacitor
3	1	C17	47uF/10V	47uF/10V tantalum capacitor
4	1	C18	22uF/63V	22uF/63V electrolytic, aluminum can capacitor
5	1	C20	10uF/63V	10uF/63V electrolytic, aluminum can capacitor
6	2	C22,C30	4.7uF	4.7uF tantalum capacitor
7	3	D1,D2,D3	BAV99	BAV99 signal diode
8	2	FPS2,LCDVCC1	Header	Header, 3x1, .1"
9	1	JP2,JP3,JP4,JP5	D9000 SmallTypeX/Y/Z connector	D9000 SmallTypeX/Y/Z connector. Samtec TFM-120-11-S-D
10	1	J1	PS/2 Connector	15-pin VGA connector
11	1	LCD1	Header	Header, 20x2, .1"
12	5	L1,L2,L3,L4,L5	Ferrite bead	Ferrite bead on wire
13	1	L6	1uH	1uH inductor
14	1	Q1	MMBT2222A	MMBT2222A
15	7	R1,R2,R5,R6,R7,R8,R17	15K	15K
16	3	R9,R10,R11	150 1%	150 1%
17	2	R12,R13	39	39 Ohms
18	1	R15	470K	470K
19	1	R16	200K Pot.	200K potentiometer
20	4	R18,R19,R20,R27	10K	10K
21	1	R21	1.5K 1%	1.5K 1%
22	1	R22	1K 1%	1K 1%
23	1	R23	140 1%	140 Ohms 1%
24	1	TS1	Header	Header, 3x2, .1"
25	1	U1	S1D13505F00A	S1D13505F00A
26	1	U2	DRAM1MX16-SOJ-3.3V	DRAM1MX16-SOJ-3.3V, Micron MT4LC1M16E5DJ-6
27	1	U4	RD-0412	RD-0412, Xentek
28	1	U5	33.333MHz	33.333MHz 8-DIP Oscillator

5 Schematic Diagrams

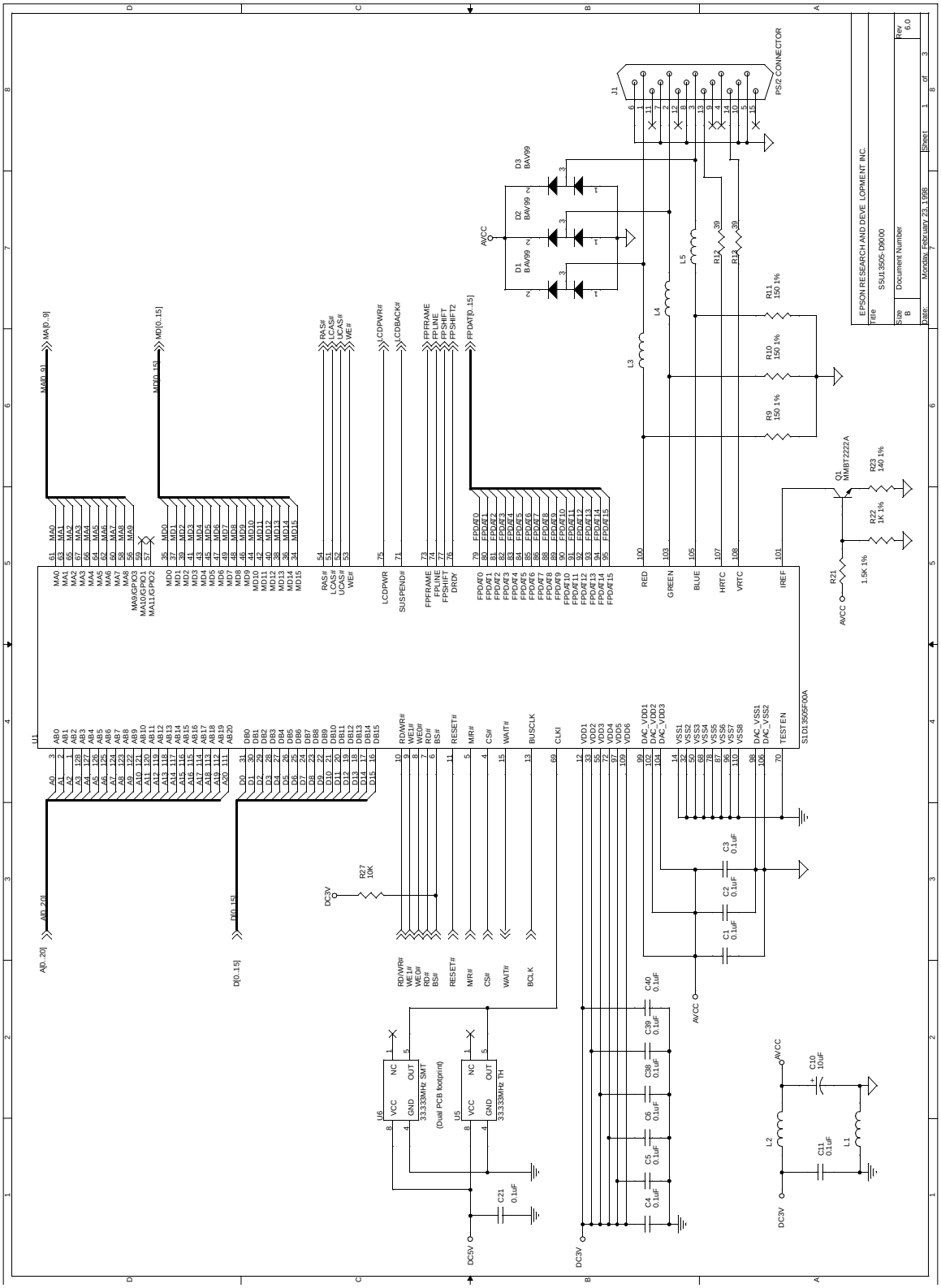

Figure 5-1: S5U13505-D9000 Schematic Diagram (1 of 3)

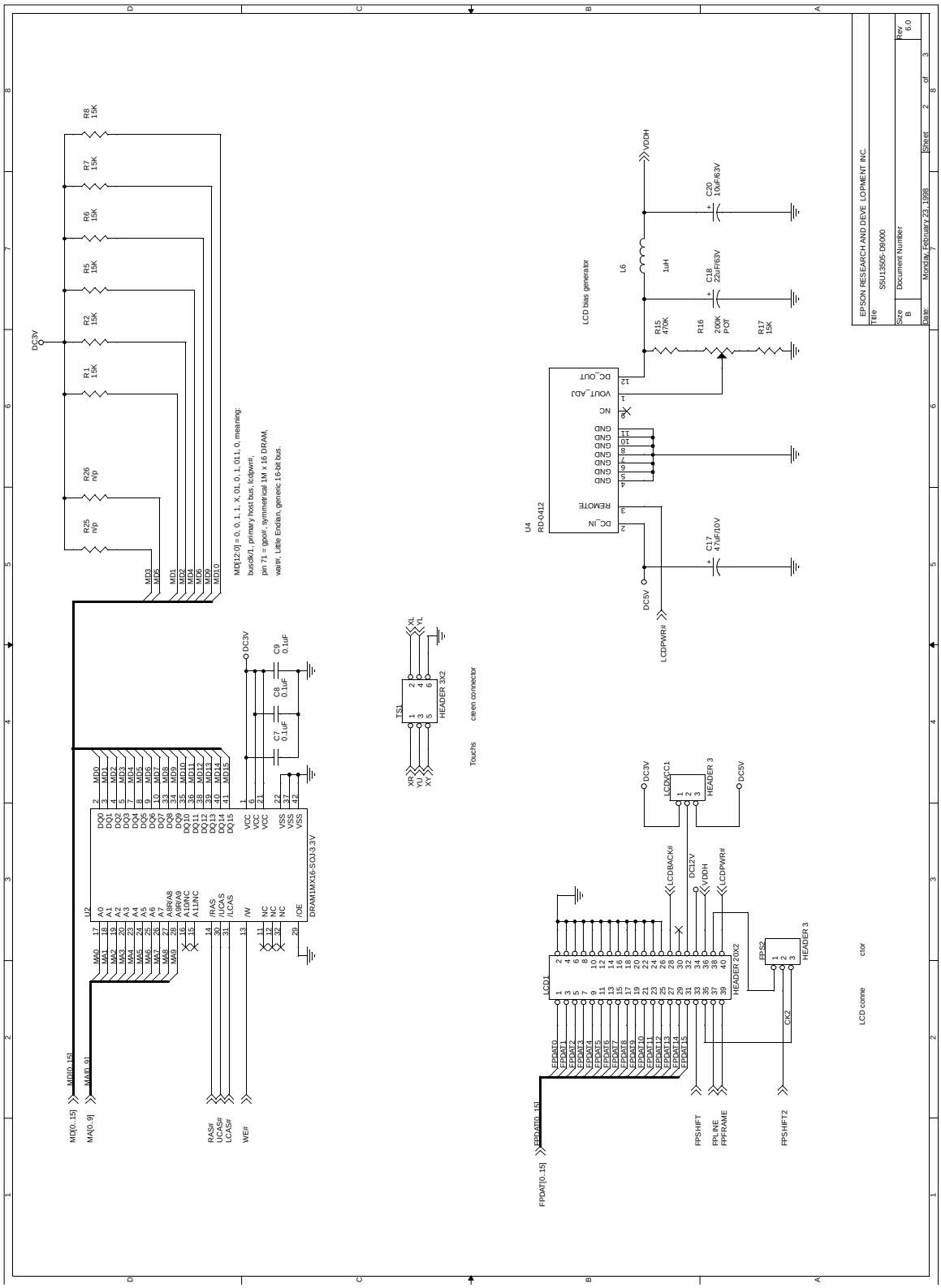

Figure 5-2: S5U13505-D9000 Schematic Diagram (2 of 3)

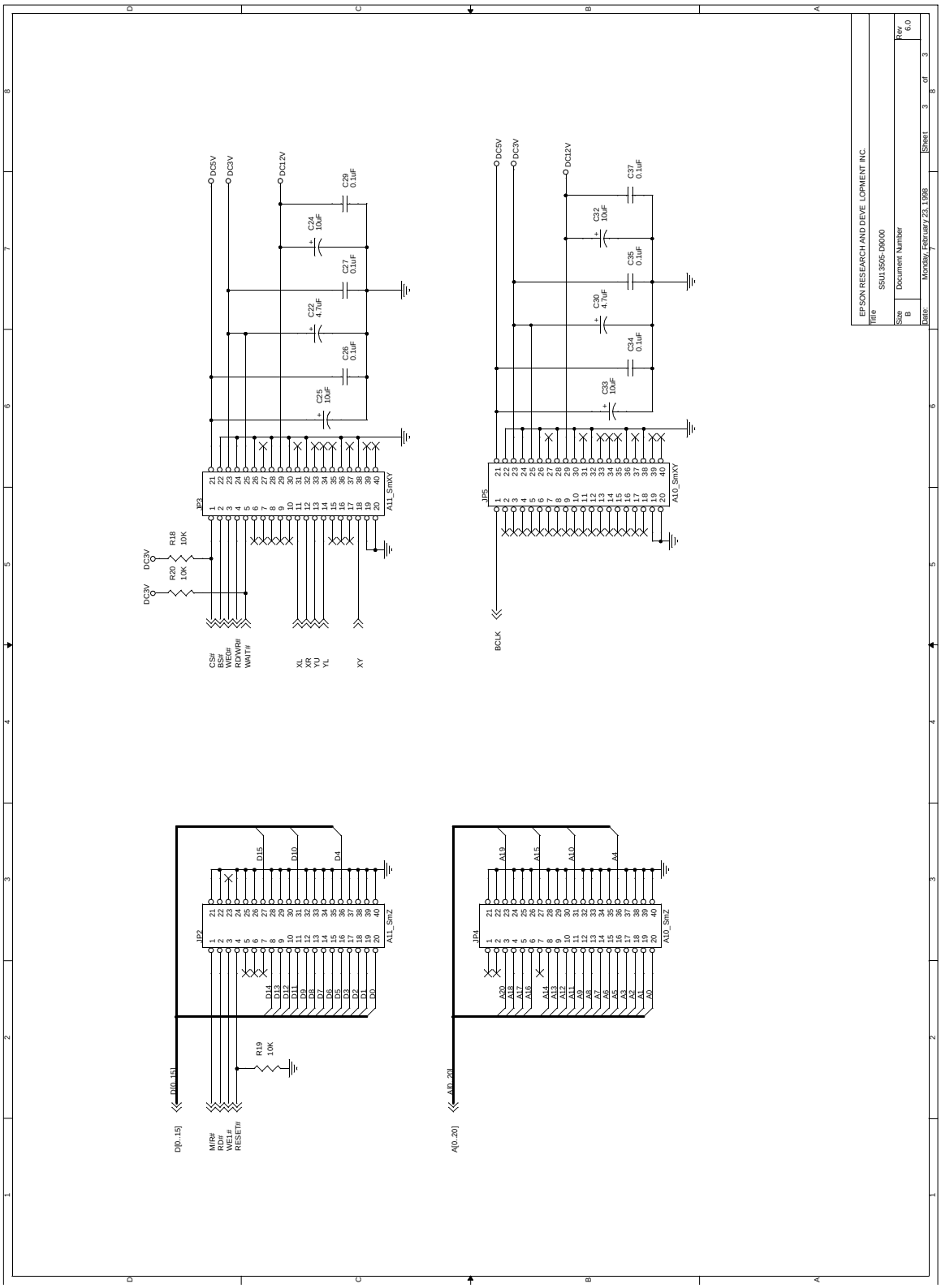

Figure 5-3: S5U13505-D9000 Schematic Diagram (3 of 3)

6 Component Placement

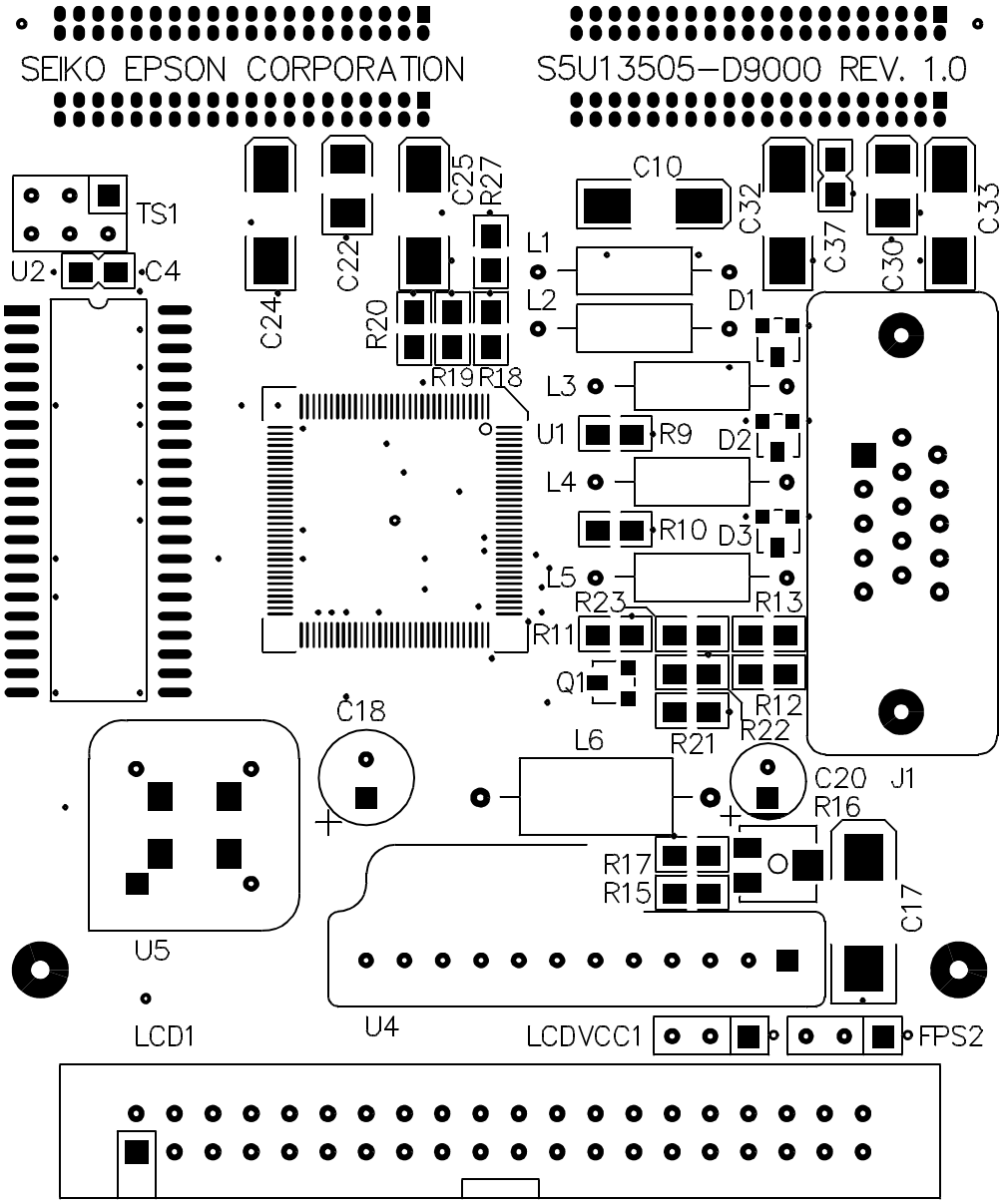

Figure 6-1: Component Placement

EPSON®

S1D13505 Embedded RAMDAC LCD/CRT Controller

Power Consumption

Document Number: X23A-G-006-03

Copyright © 2001 Epson Research and Development, Inc. All Rights Reserved.

Information in this document is subject to change without notice. You may download and use this document, but only for your own use in evaluating Seiko Epson/EPSON products. You may not modify the document. Epson Research and Development, Inc. disclaims any representation that the contents of this document are accurate or current. The Programs/Technologies described in this document may contain material protected under U.S. and/or International Patent laws.
EPSON is a registered trademark of Seiko Epson Corporation. All other trademarks are the property of their respective owners.

THIS PAGE LEFT BLANK

1 S1D13505 Power Consumption

S1D13505 power consumption is affected by many system design variables.

- Input clock frequency (CLKI): the CLKI frequency determines the LCD frame-rate, CPU performance to memory, and other functions – the higher the input clock frequency, the higher the frame-rate, performance and power consumption.
- CPU interface: the S1D13505 current consumption depends on the BUSCLK frequency, data width, number of toggling pins, and other factors – the higher the BUSCLK, the higher the CPU performance and power consumption.
- V_{DD} voltage level: the voltage level affects power consumption – the higher the voltage, the higher the consumption.
- Display mode: the resolution and color depth affect power consumption – the higher the resolution/color depth, the higher the consumption.
- Internal CLK divide: internal registers allow the input clock to be divided before going to the internal logic blocks – the higher the divide, the lower the power consumption.

There are two power save modes in the S1D13505: Software and Hardware SUSPEND. The power consumption of these modes is affected by various system design variables.

- DRAM refresh mode (CBR or self-refresh): self-refresh capable DRAM allows the S1D13505 to disable the internal memory clock thereby saving power.
- CPU bus state during SUSPEND: the state of the CPU bus signals during SUSPEND has a substantial effect on power consumption. An inactive bus (e.g. BUSCLK = low, Addr = low etc.) reduces overall system power consumption.
- CLKI state during SUSPEND: disabling the CLKI during SUSPEND has substantial power savings.

1.1 Conditions

Table 1-1: “S1D13505 Total Power Consumption” below gives an example of a specific environment and its effects on power consumption.

Table 1-1: S1D13505 Total Power Consumption

Test Condition V_{DD} = 3.3V ISA Bus (8MHz)		Gray Shades / Colors	Total Power Consumption		
			Active	Power Save Mode	
				Software	Hardware
1	Input Clock = 6MHz LCD Panel = 320x240 4-bit Single Monochrome	Black-and-White 4 Gray Shades 16 Gray Shades	18.6mW 20.3mW 22.8mW	4.29mW[1]	0.33µW[2]
2	Input Clock = 6MHz LCD Panel = 320x240 8-bit Single Color	4 Colors 16 Colors 256 Colors	22.3mW 25.3mW 29.0mW	4.32mW[1]	0.33µW[2]
3	Input Clock = 25MHz LCD Panel = 640x480 8-bit Dual Monochrome	Black-and-White 16 Gray Shades	58.5mW 71.7mW	5.71mW[1]	0.33µW[2]
4	Input Clock = 25MHz LCD Panel = 640x480 16-bit Dual Color	16 Colors 256 Colors 64K Colors	93.4mW 98.1mW 101.3mW	5.74mW[1]	0.33µW[2]
5	Input Clock = 33.333MHz CRT = 640x480 Color	16 Colors 256 Colors 64K Colors	221.1mW 234.0mW 237.3mW	6.34mW[1]	0.33µW[2]

Note

1. Conditions for Software SUSPEND:
   - CPU interface active (signals toggling)
   - CLKI active
   - Self-Refresh DRAM

2. Conditions for Hardware SUSPEND:
   - CPU interface inactive (high impedance)
   - CLKI stopped
   - Self-Refresh DRAM

2 Summary

The system design variables in Section 1, “S1D13505 Power Consumption” and in Table 1-1: “S1D13505 Total Power Consumption” show that S1D13505 power consumption depends on the specific implementation. Active Mode power consumption depends on the desired CPU performance and LCD frame-rate, whereas Power Save Mode consumption depends on the CPU Interface and Input Clock state.

In a typical design environment, the S1D13505 can be configured to be an extremely power-efficient LCD Controller with high performance and flexibility.

EPSON®

ENERGY SAVING EPSON

S1D13505 Embedded RAMDAC LCD/CRT Controller

Interfacing to the Philips MIPS PR31500/PR31700 Processor

Document Number: X23A-G-001-07

Copyright © 1998, 2001 Epson Research and Development, Inc. All Rights Reserved.

Information in this document is subject to change without notice. You may download and use this document, but only for your own use in evaluating Seiko Epson/EPSON products. You may not modify the document. Epson Research and Development, Inc. disclaims any representation that the contents of this document are accurate or current. The Programs/Technologies described in this document may contain material protected under U.S. and/or International Patent laws.

EPSON is a registered trademark of Seiko Epson Corporation. All other trademarks are the property of their respective owners.

THIS PAGE LEFT BLANK

Table of Contents

1 Introduction 7

2 Interfacing to the PR31500/PR31700 8

3 S1D13505 Host Bus Interface 9

3.1 PR31500/PR31700 Host Bus Interface Pin Mapping 9

3.2 PR31500/PR31700 Host Bus Interface Signals 10

4 Direct Connection to the Philips PR31500/PR31700 11

4.1 Hardware Description 11

4.2 S1D13505 Configuration 12

4.3 Memory Mapping and Aliasing 13

5 System Design Using the IT8368E PC Card Buffer 14

5.1 Hardware Description 14

5.2 IT8368E Configuration 15

5.3 S1D13505 Configuration 15

6 Software 16

7 References 17

7.1 Documents 17

7.2 Document Sources 17

8 Technical Support 18

8.1 EPSON LCD/CRT Controllers (S1D13505) 18

8.2 Philips MIPS PR31500/PR31700 Processor 18

8.3 ITE IT8368E 18

THIS PAGE LEFT BLANK

List of Tables

Table 3-1: PR31500/PR31700 Host Bus Interface Pin Mapping 9
Table 4-1: S1D13505 Configuration for Direct Connection. 12
Table 4-2: PR31500/PR31700 to PC Card Slots Address Remapping for Direct Connection 13

List of Figures

Figure 4-1: Typical Implementation of Direct Connection 11
Figure 5-1: IT8368E Implementation Block Diagram 14

THIS PAGE LEFT BLANK

1 Introduction

This application note describes the hardware and software environment necessary to provide an interface between the S1D13505 Embedded RAMDAC LCD/CRT Controller and the Philips MIPS PR31500/PR31700 Processor.

The designs described in this document are presented only as examples of how such interfaces might be implemented. This application note will be updated as appropriate. Please check the Epson Electronics America website at http://www.eea.epson.com for the latest revision of this document before beginning any development.

We appreciate your comments on our documentation. Please contact us via email at techpubs@erd.epson.com.

2 Interfacing to the PR31500/PR31700

The Philips MIPS PR31500/PR31700 processor supports up to two PC Card (PCMCIA) slots. It is through this host bus interface that the S1D13505 connects to the PR31500/PR31700 processor.

The S1D13505 can be successfully interfaced using one of the following configurations:

- Direct connection to the PR31500/PR31700 (see Section 4, *"Direct Connection to the Philips PR31500/PR31700"* on page 11).
- System design using the ITE IT8368E PC Card/GPIO buffer chip (see Section 5, *"System Design Using the IT8368E PC Card Buffer"* on page 14).

3 S1D13505 Host Bus Interface

The S1D13505 implements a 16-bit host bus interface specifically for interfacing to the PR31500/PR31700 microprocessor.

The PR31500/PR31700 host bus interface is selected by the S1D13505 on the rising edge of RESET#. After releasing reset, the bus interface signals assume their selected configuration. For details on S1D13505 configuration, see Section 4.2, *"S1D13505 Configuration"* on page 12.

Note

At reset, the Host Interface Disable bit in the Miscellaneous Disable Register (REG[1Bh] bit 7) is set to 1. This means that only REG[1Ah] (read-only) and REG[1Bh] are accessible **until a write to REG[1Bh] sets bit 7 to 0 making all registers accessible**. When debugging a new hardware design, this can sometimes give the appearance that the interface is not working, so it is important to remember to clear this bit before proceeding with debugging.

3.1 PR31500/PR31700 Host Bus Interface Pin Mapping

The following table shows the function of each host bus interface signal.

Table 3-1: PR31500/PR31700 Host Bus Interface Pin Mapping

S1D13505 Pin Name	Philips PR31500/PR31700
AB20	ALE
AB19	/CARDREG
AB18	/CARDIORD
AB17	/CARDIOWR
AB[16:13]	V_{DD}
AB[12:0]	A[12:0]
DB[15:8]	D[23:16]
DB[7:0]	D[31:24]
WE1#	/CARDxCSH
M/R#	V_{DD}
CS#	V_{DD}
BUSCLK	DCLKOUT
BS#	V_{DD}
RD/WR#	/CARDxCSL
RD#	/RD
WE0#	/WE
WAIT#	/CARDxWAIT
RESET#	RESET#

3.2 PR31500/PR31700 Host Bus Interface Signals

When the S1D13505 is configured to operate with the PR31500/PR31700, the host interface requires the following signals:

- BUSCLK is a clock input required by the S1D13505 host bus interface. It is separate from the input clock (CLKI) and should be driven by the PR31500/PR31700 bus clock output DCLKOUT.
- Address input AB20 corresponds to the PR31500/PR31700 signal ALE (address latch enable) whose falling edge indicates that the most significant bits of the address are present on the multiplexed address bus (AB[12:0]).
- Address input AB19 should be connected to the PR31500/PR31700 signal /CARDREG. This signal is active when either IO or configuration space of the PR31500/PR31700 PC Card slot is being accessed.
- Address input AB18 should be connected to the PR31500/PR31700 signal /CARDIORD. Either AB18 or the RD# input must be asserted for a read operation to take place.
- Address input AB17 should be connected to the PR31500/PR31700 signal /CARDIOWR. Either AB17 or the WE0# input must be asserted for a write operation to take place.
- Address inputs AB[16:13] and control inputs M/R#, CS# and BS# must be tied to V_{DD} as they are not used in this interface mode.
- Address inputs AB[12:0], and the data bus DB[15:0], connect directly to the PR31500/PR31700 address and data bus, respectively. MD4 must be set to select the proper endian mode on reset (see Section 4.2, *"S1D13505 Configuration"* on page 12). **Because of the PR31500/PR31700 data bus naming convention and endian mode, S1D13505 DB[15:8] must be connected to PR31500/PR31700 D[23:16], and S1D13505 DB[7:0] must be connected to PR31500/PR31700 D[31:24].**
- Control inputs WE1# and RD/WR# should be connected to the PR31500/PR31700 signals /CARDxCSH and /CARDxCSL respectively for byte steering.
- Input RD# should be connected to the PR31500/PR31700 signal /RD. Either RD# or the AB18 input (/CARDIORD) must be asserted for a read operation to take place.
- Input WE0# should be connected to the PR31500/PR31700 signal /WR. Either WE0# or the AB17 input (/CARDIOWR) must be asserted for a write operation to take place.
- WAIT# is a signal output from the S1D13505 that indicates the host CPU must wait until data is ready (read cycle) or accepted (write cycle) on the host bus. Since the host CPU accesses to the S1D13505 may occur asynchronously to the display update, it is possible that contention may occur in accessing the S1D13505 internal registers and/or display buffer. The WAIT# line resolves these contentions by forcing the host to wait until the resource arbitration is complete.

4 Direct Connection to the Philips PR31500/PR31700

The S1D13505 was specifically designed to support the Philips MIPS PR31500/PR31700 processor. When configured, the S1D13505 will utilize one of the PC Card slots supported by the processor.

4.1 Hardware Description

In this example implementation, the S1D13505 occupies one PC Card slot and resides in the Attribute and IO address range. The processor provides address bits A[12:0], with A[23:13] being multiplexed and available on the falling edge of ALE. Peripherals requiring more than 8K bytes of address space would require an external latch for these multiplexed bits. However, the S1D13505 has an internal latch specifically designed for this processor making additional logic unnecessary. To further reduce the need for external components, the S1D13505 has an optional BUSCLK divide-by-2 feature, allowing the high speed DCLKOUT from the processor to be directly connected to the BUSCLK input of the S1D13505. An optional external oscillator may be used for BUSCLK since the S1D13505 will accept host bus control signals asynchronously with respect to BUSCLK.

The following diagram shows a typical implementation of the interface.

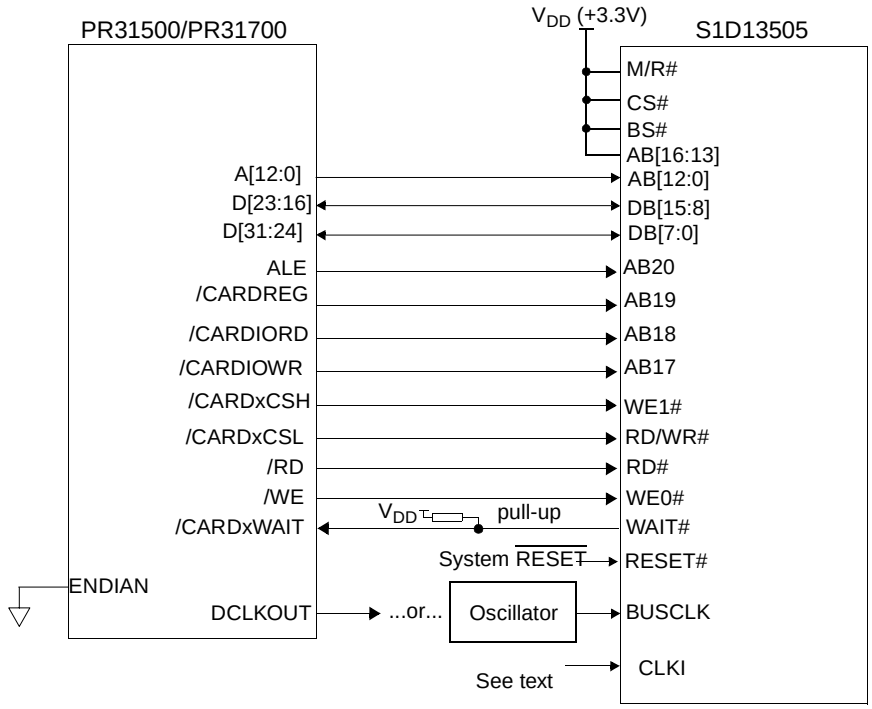

Note: When connecting the S1D13505 RESET# pin, the system designer should be aware of all conditions that may reset the S1D13505 (e.g. CPU reset can be asserted during wake-up from power-down modes, or during debug states).

Figure 4-1: Typical Implementation of Direct Connection

The host interface control signals of the S1D13505 are asynchronous with respect to the S1D13505 bus clock. This gives the system designer full flexibility to choose the appropriate source (or sources) for CLKI and BUSCLK. The choice of whether both clocks should be the same, whether to use DCLKOUT as clock source, and whether an external or internal clock divider is needed, should be based on the desired:

- pixel and frame rates.
- power budget.
- part count.
- maximum S1D13506 clock frequencies.

The S1D13505 also has internal CLKI dividers providing additional flexibility.

4.2 S1D13505 Configuration

The S1D13505 latches MD15 through MD0 to allow selection of the bus mode and other configuration data on the rising edge of RESET#. For details on configuration, refer to the *S1D13505 Hardware Functional Specification*, document number X23A-A-001-xx.

The table below shows those configuration settings relevant to the Philips PR31500/PR31700 host bus interface.

Table 4-1: S1D13505 Configuration for Direct Connection

S1D13505 Pin Name	**Value on this pin at rising edge of RESET# is used to configure:**	
	1 (V_{DD})	**0 (V_{SS})**
MD0	8-bit host bus interface	16-bit host bus interface
MD[3:1]	111 = Philips PR31500/PR31700 host bus interface if Alternate host bus interface is selected	
MD4	Little Endian	Big Endian
MD5	WAIT# is active high (1 = insert wait state)	WAIT# is active low (0 = insert wait state)
MD11	Alternate host bus interface selected	Primary host bus interface selected
MD12	BUSCLK input divided by two: use with DCLKOUT	BUSCLK input not divided: use with external oscillator

= configuration for Philips PR31500/PR31700 host bus interface

4.3 Memory Mapping and Aliasing

The PR31500/PR31700 uses a portion of the PC Card Attribute and IO space to access the S1D13505. The S1D13505 responds to both PC Card Attribute and IO bus accesses, thus freeing the programmer from having to set the PR31500/PR31700 Memory Configuration Register 3 bit CARD1IOEN (or CARD2IOEN if slot 2 is used). As a result, the PR31500/PR31700 sees the S1D13505 on its PC Card slot as described in the table below.

Table 4-2: PR31500/PR31700 to PC Card Slots Address Remapping for Direct Connection

S1D13505 Uses PC Card Slot #	Philips Address	Size	Function
1	0800 0000h	16M byte	Card 1 IO or Attribute
	0900 0000h	8M byte	S1D13505 registers, aliased 4 times at 2M byte intervals
	0980 0000h	8M byte	S1D13505 display buffer, aliased 4 times at 2M byte intervals
	0A00 0000h	32M byte	Card 1 IO or Attribute
	6400 0000h	64M byte	Card 1 Memory
2	0C00 0000h	16M byte	Card 2 IO or Attribute
	0D00 0000h	8M byte	S1D13505 registers, aliased 4 times at 2M byte intervals
	0D80 0000h	8M byte	S1D13505 display buffer, aliased 4 times at 2M byte intervals
	0E00 0000h	32M byte	Card 2 IO or Attribute
	6800 0000h	64M byte	Card 2 Memory

5 System Design Using the IT8368E PC Card Buffer

In a system design using one or two ITE IT8368E PC Card and multiple-function IO buffers, the S1D13505 can be interfaced so as to share one of the PC Card slots.

5.1 Hardware Description

The IT8368E can be programmed to allocate the same portion of the PC Card Attribute and IO space to the S1D13505 as in the direct connection implementation described in Section 4, *"Direct Connection to the Philips PR31500/PR31700"* on page 11.

Following is a block diagram showing an implementation using the IT8368E PC Card buffer.

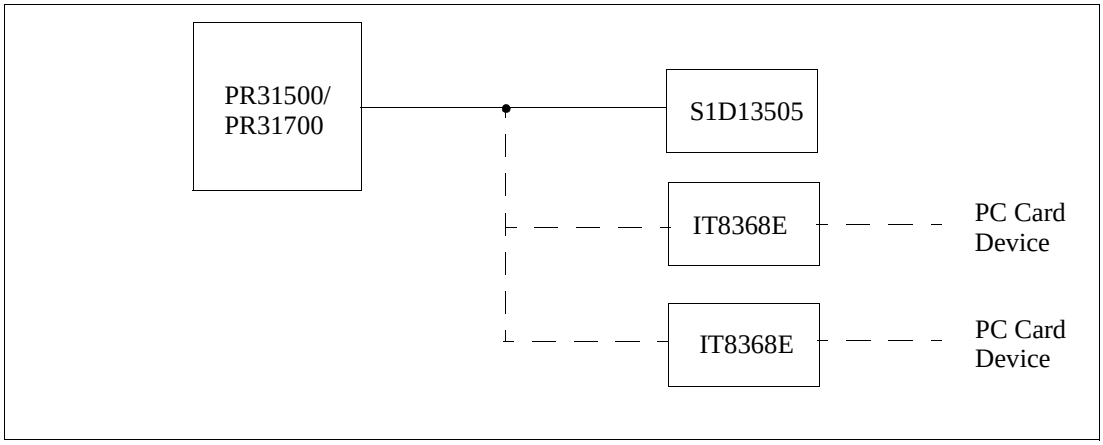

Figure 5-1: IT8368E Implementation Block Diagram

5.2 IT8368E Configuration

The ITE IT8368E has been specifically designed to support EPSON LCD/CRT controllers. Older EPSON Controllers not supporting a direct interface to the Philips processor can utilize the IT8368E MFIO pins to provide the necessary control signals, however when using the S1D13505 this is not necessary as the Direct Connection described in Section 4, *"Direct Connection to the Philips PR31500/PR31700"* on page 11 can be used.

The IT8368E must have both "Fix Attribute/IO" and "VGA" modes enabled. When both these modes are enabled a 16M byte portion of the system PC Card attribute and IO space is allocated to address the S1D13505.

When the IT8368E senses that the S1D13505 is being accessed, it does not propagate the PC Card signals to its PC Card device. This makes S1D13505 accesses transparent to any PC Card device connected to the same slot.

For mapping details, refer to Section 4.3, *"Memory Mapping and Aliasing"* on page 13. For further information on configuring the IT8368E, refer to the *IT8368E PC Card/GPIO Buffer Chip Specification.*

5.3 S1D13505 Configuration

For S1D13505 configuration, refer to Section 4.2, *"S1D13505 Configuration"* on page 12.

6 Software

Test utilities and Windows® CE v2.0 display drivers are available for the S1D13505. Full source code is available for both the test utilities and the drivers.

The test utilities are configurable for different panel types using a program called 13505CFG, or by directly modifying the source. The Windows CE v2.0 display drivers can be customized by the OEM for different panel types, resolutions and color depths only by modifying the source.

The S1D13505 test utilities and Windows CE v2.0 display drivers are available from your sales support contact or on the internet at http://www.eea.epson.com.

7 References

7.1 Documents

- Philips Electronics, *PR31500/PR31700 Preliminary Specification*s.
- Epson Research and Development, Inc., *S1D13505 Hardware Functional Specification*, Document Number X23A-A-001-xx.
- Epson Research and Development, Inc., *S5U13505B00C Rev. 1.0 ISA Bus Evaluation Board User Manual*, Document Number X23A-G-004-xx.
- Epson Research and Development, Inc., *S1D13505 Programming Notes and Examples*, Document Number X23A-G-003-xx.

7.2 Document Sources

- Philips Electronics Website: http://www-us2.semiconductors.philips.com.
- Epson Electronics America Website: http://www.eea.epson.com.

8 Technical Support

8.1 EPSON LCD/CRT Controllers (S1D13505)

Japan
Seiko Epson Corporation
Electronic Devices Marketing Division
421-8, Hino, Hino-shi
Tokyo 191-8501, Japan
Tel: 042-587-5812
Fax: 042-587-5564
http://www.epson.co.jp

North America
Epson Electronics America, Inc.
150 River Oaks Parkway
San Jose, CA 95134, USA
Tel: (408) 922-0200
Fax: (408) 922-0238
http://www.eea.epson.com

Taiwan, R.O.C.
Epson Taiwan Technology
& Trading Ltd.
10F, No. 287
Nanking East Road
Sec. 3, Taipei, Taiwan, R.O.C.
Tel: 02-2717-7360
Fax: 02-2712-9164

Europe
Epson Europe Electronics GmbH
Riesstrasse 15
80992 Munich, Germany
Tel: 089-14005-0
Fax: 089-14005-110

Hong Kong
Epson Hong Kong Ltd.
20/F., Harbour Centre
25 Harbour Road
Wanchai, Hong Kong
Tel: 2585-4600
Fax: 2827-4346

Singapore
Epson Singapore Pte., Ltd.
No. 1
Temasek Avenue #36-00
Millenia Tower
Singapore, 039192
Tel: 337-7911
Fax: 334-2716

8.2 Philips MIPS PR31500/PR31700 Processor

Philips Semiconductors

Handheld Computing Group
4811 E. Arques Avenue
M/S 42, P.O. Box 3409
Sunnyvale, CA 94088-3409
Tel: (408) 991-2313
http://www.philips.com

8.3 ITE IT8368E

Integrated Technology Express, Inc.
Sales & Marketing Division
2710 Walsh Avenue
Santa Clara, CA 95051, USA
Tel: (408) 980-8168
Fax: (408) 980-9232
http://www.iteusa.com

S1D13505 Embedded RAMDAC LCD/CRT Controller

Interfacing to the PC Card Bus

Document Number: X23A-G-005-06

Copyright © 1998, 2001 Epson Research and Development, Inc. All Rights Reserved.

Information in this document is subject to change without notice. You may download and use this document, but only for your own use in evaluating Seiko Epson/EPSON products. You may not modify the document. Epson Research and Development, Inc. disclaims any representation that the contents of this document are accurate or current. The Programs/Technologies described in this document may contain material protected under U.S. and/or International Patent laws.

EPSON is a registered trademark of Seiko Epson Corporation. All other trademarks are the property of their respective owners.

THIS PAGE LEFT BLANK

Table of Contents

1 Introduction 7

2 Interfacing to the PC Card Bus 8

2.1 The PC Card System Bus 8

2.1.1 PC Card Overview 8

2.1.2 Memory Access Cycles 8

3 S1D13505 Host Bus Interface 11

3.1 PC Card Host Bus Interface Pin Mapping 11

3.2 PC Card Host Bus Interface Signals 12

4 PC Card to S1D13505 Interface 13

4.1 Hardware Description 13

4.2 S1D13505 Hardware Configuration 15

4.3 Performance 15

4.4 Register/Memory Mapping 16

5 Software 17

6 References 18

6.1 Documents 18

6.2 Document Sources 18

7 Technical Support 19

7.1 Epson LCD/CRT Controllers (S1D13505) 19

7.2 PC Card Standard 19

THIS PAGE LEFT BLANK

List of Tables

Table 3-1: PC Card Host Bus Interface Pin Mapping 11
Table 4-1: Summary of Power-On/Reset Options 15
Table 4-2: Register/Memory Mapping for Typical Implementation 16

List of Figures

Figure 2-1: PC Card Read Cycle 9
Figure 2-2: PC Card Write Cycle 10
Figure 4-1: Typical Implementation of PC Card to S1D13505 Interface. 14

THIS PAGE LEFT BLANK

1 Introduction

This application note describes the hardware and software environment required to provide an interface between the S1D13505 Embedded RAMDAC LCD/CRT Controller and the PC Card (PCMCIA) bus.

The designs described in this document are presented only as examples of how such interfaces might be implemented. This application note will be updated as appropriate. Please check the Epson Electronics America website at http://www.eea.epson.com for the latest revision of this document before beginning any development.

We appreciate your comments on our documentation. Please contact us via email at techpubs@erd.epson.com.

2 Interfacing to the PC Card Bus

2.1 The PC Card System Bus

PC Card technology has gained wide acceptance in the mobile computing field as well as in other markets due to its portability and ruggedness. This section is an overview of the operation of the 16-bit PC Card interface conforming to the PCMCIA 2.0/JEIDA 4.1 Standard (or later).

2.1.1 PC Card Overview

The 16-bit PC Card provides a 26-bit address bus and additional control lines which allow access to three 64M byte address ranges. These ranges are used for common memory space, IO space, and attribute memory space. Common memory may be accessed by a host system for memory read and write operations. Attribute memory is used for defining card specific information such as configuration registers, card capabilities, and card use. IO space maintains software and hardware compatibility with hosts such as the Intel x86 architecture, which address peripherals independently from memory space.

Bit notation follows the convention used by most micro-processors, the high bit being the most significant. Therefore, signals A25 and D15 are the most significant bits for the address and data busses respectively.

Support is provided for on-chip DMA controllers. To find further information on these topics, refer to Section 6, “References” on page 18.

PC Card bus signals are asynchronous to the host CPU bus signals. Bus cycles are started with the assertion of the CE1# and/or the CE2# card enable signals. The cycle ends once these signals are de-asserted. Bus cycles can be lengthened using the WAIT# signal.

Note

The PCMCIA 2.0/JEIDA 4.1 (and later) PC Card Standard support the two signals WAIT# and RESET which are not supported in earlier versions of the standard. The WAIT# signal allows for asynchronous data transfers for memory, attribute, and IO access cycles. The RESET signal allows resetting of the card configuration by the reset line of the host CPU.

2.1.2 Memory Access Cycles

A data transfer is initiated when a memory address is placed on the PC Card bus and one, or both, of the card enable signals (CE1# and CE2#) are driven low. REG# must be inactive. If only CE1# is driven low, 8-bit data transfers are enabled and A0 specifies whether the even or odd data byte appears on data bus lines D[7:0]. If both CE1# and CE2# are driven low, a 16-bit word transfer takes place. If only CE2# is driven low, an odd byte transfer occurs on data lines D[15:8].

During a read cycle, OE# (output enable) is driven low. A write cycle is specified by driving OE# high and driving the write enable signal (WE#) low. The cycle can be lengthened by driving WAIT# low for the time needed to complete the cycle.

Figure 2-1: illustrates a typical memory access read cycle on the PC Card bus.

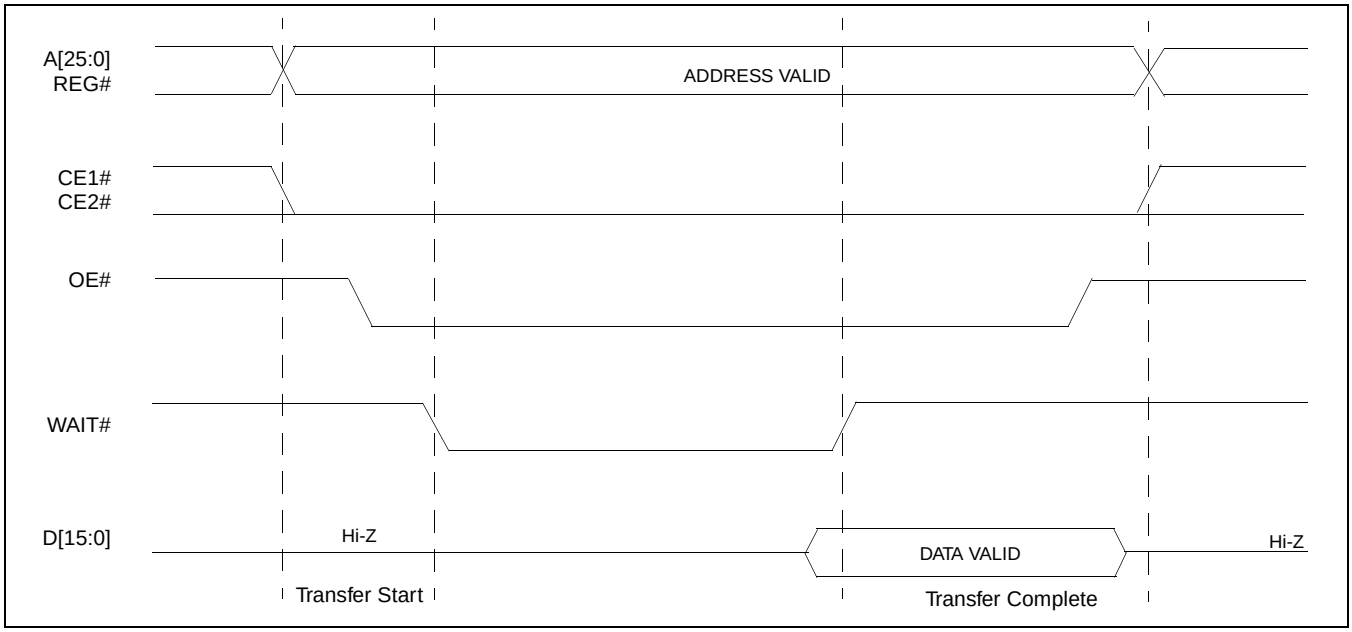

Figure 2-1: PC Card Read Cycle

Figure 2-2: illustrates a typical memory access write cycle on the PC Card bus.

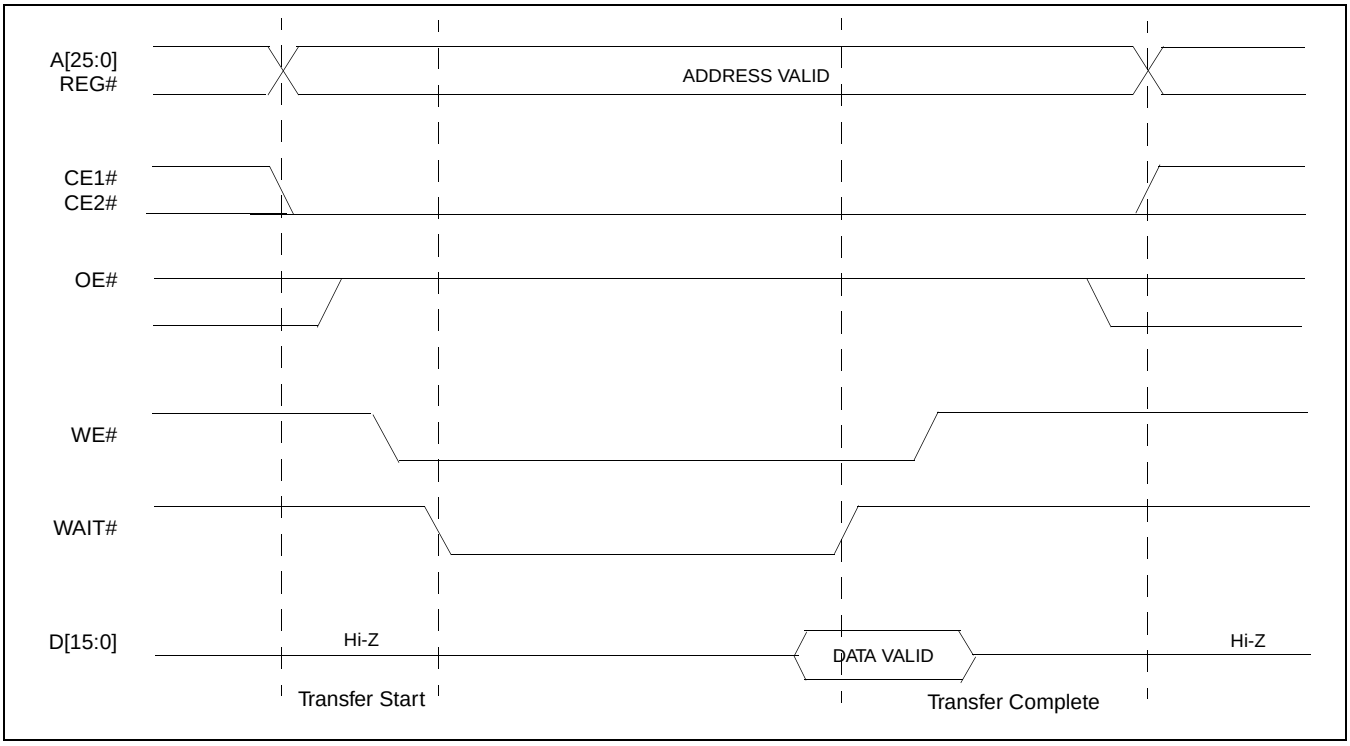

Figure 2-2: PC Card Write Cycle

3 S1D13505 Host Bus Interface

The S1D13505 implements a 16-bit PC Card (PCMCIA) host bus interface which is used to interface to the PC Card bus.

The PC Card host bus interface is selected by the S1D13505 on the rising edge of RESET#. After releasing reset the bus interface signals assume their selected configuration. For details on S1D13505 configuration, see Section 4.2, “S1D13505 Hardware Configuration” on page 15.

Note

At reset, the Host Interface Disable bit in the Miscellaneous Disable Register (REG[1Bh] bit 7) is set to 1. This means that only REG[1Ah] (read-only) and REG[1Bh] are accessible **until a write to REG[1Bh] sets bit 7 to 0 making all registers accessible**. When debugging a new hardware design, this can sometimes give the appearance that the interface is not working, so it is important to remember to clear this bit before proceeding with debugging.

3.1 PC Card Host Bus Interface Pin Mapping

The following table shows the functions of each host bus interface signal.

Table 3-1: PC Card Host Bus Interface Pin Mapping

S1D13505 Pin Name	PC Card (PCMCIA)
AB[20:0]	A[20:0][1]
DB[15:0]	D[15:0]
WE1#	-CE2
M/R#	External Decode
CS#	External Decode
BUSCLK	n/a[2]
BS#	V_{DD}
RD/WR#	-CE1
RD#	-OE
WE0#	-WE
WAIT#	-WAIT
RESET#	Inverted RESET

Note

[1] The bus signal A0 is not used by the S1D13505 internally.

[2]Although a clock is not directly supplied by the PC Card interface, one is required by the S1D13505 PC Card host bus interface. For an example of how this can be accomplished see the discussion on BUSCLK in Section 3.2, “PC Card Host Bus Interface Signals” on page 12.

3.2 PC Card Host Bus Interface Signals

The S1D13505 PC Card host bus interface is designed to support processors which interface the S1D13505 through the PC Card bus.

The S1D13505 PC Card host bus interface requires the following signals from the PC Card bus.

- BUSCLK is a clock input which is required by the S1D13505 host bus interface. It is separate from the input clock (CLKI) and is typically driven by the host CPU system clock. Since PC Card signalling is independent of any clock, BUSCLK can come from any oscillator already implemented. For example, the source for the CLKI input of the S1D13505 may be used.
- The address inputs AB[20:0], and the data bus DB[15:0], connect directly to the PC Card address (A[20:0]) and data bus (D[15:0]), respectively. MD4 must be set to select little endian mode upon reset.
- M/R# (memory/register) selects between memory or register access. It may be connected to an address line, allowing system address A21 to be connected to the M/R# line.
- Chip Select (CS#) must be driven low whenever the S1D13505 is accessed by the PC Card bus.
- WE1# and RD/WR# connect to -CE2 and -CE1 (the byte enables for the high-order and low-order bytes). They are driven low when the PC Card bus is accessing the S1D13505.
- RD# connects to -OE (the read enable signal from the PC Card bus).
- WE0# connects to -WE (the write enable signal from the PC Card bus).
- WAIT# is a signal output from the S1D13505 that indicates the PC Card bus must wait until data is ready (read cycle) or accepted (write cycle) on the host bus. Since PC Card bus accesses to the S1D13505 may occur asynchronously to the display update, it is possible that contention may occur in accessing the S1D13505 internal registers and/or display buffer. The WAIT# line resolves these contentions by forcing the host to wait until the resource arbitration is complete. For PC Card applications, this signal should be set active low using the MD5 configuration input.
- The Bus Start (BS#) signal is not used for the PC Card host bus interface and should be tied high (connected to V_{DD}).
- The RESET# (active low) input of the S1D13505 may be connected to the PC Card RESET (active high) using an inverter.

4 PC Card to S1D13505 Interface

4.1 Hardware Description

The S1D13505 is designed to directly support a variety of CPUs, providing an interface to each processor's unique "local bus". However, in order to provide support for processors not having an appropriate local bus, the S1D13505 supports a specific PC Card interface.

The S1D13505 provides a "glueless" interface to the PC Card bus except for the following.

- The RESET# signal on the S1D13505 is active low and must be inverted to support the active high RESET provided by the PC Card interface.
- Although the S1D13505 supports an asynchronous bus interface, a clock source is required on the BUSCLK input pin.

In this implementation, the address inputs (AB[20:0]) and data bus (DB[15:0]) connect directly to the CPU address (A[20:0]) and data bus (D[15:0]). M/R# is treated as an address line so that it can be controlled using system address A21.

The PC Card interface does not provide a bus clock, so one must be supplied for the S1D13505. Since the bus clock frequency is not critical, nor does it have to be synchronous to the bus signals, it may be the same as CLKI. BS# (bus start) is not used and should be tied high (connected to V_{DD}).

The following diagram shows a typical implementation of the PC Card to S1D13505 interface.

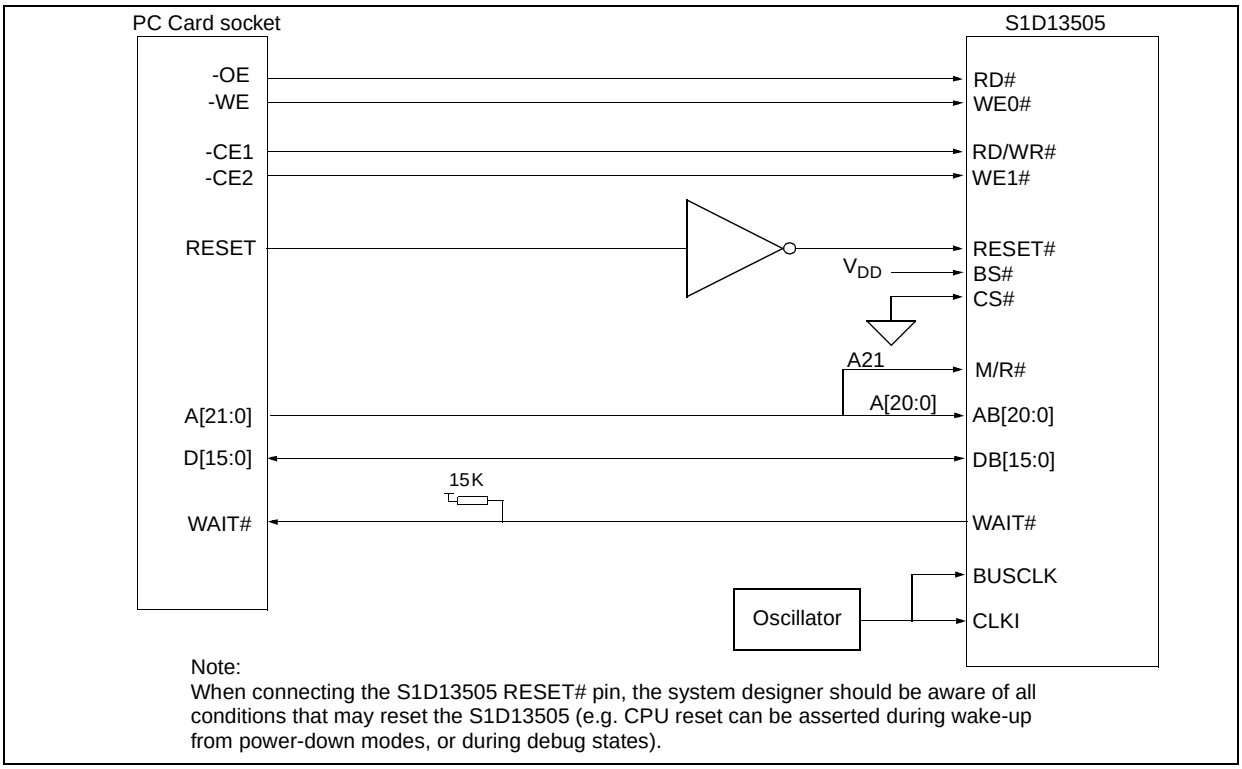

Figure 4-1: Typical Implementation of PC Card to S1D13505 Interface

4.2 S1D13505 Hardware Configuration

The S1D13505 latches MD15 through MD0 to allow selection of the bus mode and other configuration data on the rising edge of RESET#. For details on configuration, refer to the *S1D13505 Hardware Functional Specification*, document number X23A-A-001-xx.

The table below shows only those configuration settings important to the PC Card host bus interface.

Table 4-1: Summary of Power-On/Reset Options

S1D13505 Pin Name	**value on this pin at rising edge of RESET# is used to configure:**(1/0)	
	1	**0**
MD0	8-bit host bus interface	16-bit host bus interface
MD[3:1]	111 = PC Card host bus interface selected	
MD4	Little Endian	Big Endian
MD5	WAIT# is active high (1 = insert wait state)	WAIT# is active low (0 = insert wait state)
MD11	Alternate Host Bus Interface Selected	Primary Host Bus Interface Selected
MD12	BUSCLK input divided by two	BUSCLK input not divided by two

= configuration for PC Card host bus interface

4.3 Performance

The S1D13505 PC Card Interface specification supports a BCLK up to 50MHz, and therefore can provide a high performance display solution.

4.4 Register/Memory Mapping

The S1D13505 is a memory mapped device. The internal registers require 47 bytes and are mapped in the lower PC Card memory address space starting at zero.The display buffer requires 2M bytes and is mapped in the third and fourth megabytes of the PC Card address space (ranging from 200000h to 3FFFFFh).

A typical implementation as shown in Figure 4-1: “Typical Implementation of PC Card to S1D13505 Interface,” on page 14 has Chip Select (CS#) connected to ground (always enabled) and the Memory/Register select pin (M/R#) connected to address bit A21. This provides the following decoding:

Table 4-2: Register/Memory Mapping for Typical Implementation

CS#	M/R# (A21)	Address Range	Function
0	0	0 - 1F FFFFh	Internal Register Set decoded
0	1	20 0000h - 3F FFFFh	Display Buffer decode

The PC Card socket provides 64M byte of address space. Without further resolution on the decoding logic (M/R# connected to A21), the entire register set is aliased for every 64 byte boundary within the specified address range above. Since address bits A[25:22] are ignored, the S1D13505 registers and display buffer are aliased 16 times.

Note

If aliasing is not desirable, the upper addresses must be fully decoded.

5 Software

Test utilities and Windows® CE v2.0 display drivers are available for the S1D13505. Full source code is available for both the test utilities and the drivers.

The test utilities are configurable for different panel types using a program called 13505CFG, or by directly modifying the source. The Windows CE v2.0 display drivers can be customized by the OEM for different panel types, resolutions and color depths only by modifying the source.

The S1D13505 test utilities and Windows CE v2.0 display drivers are available from your sales support contact or on the internet at http://www.eea.epson.com.

6 References

6.1 Documents

- *PC Card (PCMCIA) Standard*, March 1997
- Epson Research and Development, Inc., *S1D13505 Hardware Functional Specification*, Document Number X23A-A-001-xx.
- Epson Research and Development, Inc., *S1D13505 Programming Notes and Examples*, Document Number X23A-G-003-xx.
- Epson Research and Development, Inc., *S5U13505B00C Rev. 1.0 ISA Bus Evaluation Board User Manual*, Document Number X23A-G-004-xx.

6.2 Document Sources

- PC Card Website: http://www.pc-card.com.
- Epson Electronics America Website: http://www.eea.epson.com.

7 Technical Support

7.1 Epson LCD/CRT Controllers (S1D13505)

Japan
Seiko Epson Corporation
Electronic Devices Marketing Division
421-8, Hino, Hino-shi
Tokyo 191-8501, Japan
Tel: 042-587-5812
Fax: 042-587-5564
http://www.epson.co.jp

Hong Kong
Epson Hong Kong Ltd.
20/F., Harbour Centre
25 Harbour Road
Wanchai, Hong Kong
Tel: 2585-4600
Fax: 2827-4346

North America
Epson Electronics America, Inc.
150 River Oaks Parkway
San Jose, CA 95134, USA
Tel: (408) 922-0200
Fax: (408) 922-0238
http://www.eea.epson.com

Europe
Epson Europe Electronics GmbH
Riesstrasse 15
80992 Munich, Germany
Tel: 089-14005-0
Fax: 089-14005-110

Taiwan, R.O.C.
Epson Taiwan Technology
& Trading Ltd.
10F, No. 287
Nanking East Road
Sec. 3, Taipei, Taiwan, R.O.C.
Tel: 02-2717-7360
Fax: 02-2712-9164

Singapore
Epson Singapore Pte., Ltd.
No. 1
Temasek Avenue #36-00
Millenia Tower
Singapore, 039192
Tel: 337-7911
Fax: 334-2716

7.2 PC Card Standard

PCMCIA
(Personal Computer Memory Card International Association)

2635 North First Street, Suite 209
San Jose, CA 95134, USA
Tel: (408) 433-2273
Fax: (408) 433-9558
http://www.pc-card.com

THIS PAGE LEFT BLANK

EPSON®

ENERGY SAVING EPSON

S1D13505 Embedded RAMDAC LCD/CRT Controller

Interfacing to the NEC VR4102/VR4111™ Microprocessors

Document Number: X23A-G-007-06

Copyright © 1998, 2001 Epson Research and Development, Inc. All Rights Reserved.

Information in this document is subject to change without notice. You may download and use this document, but only for your own use in evaluating Seiko Epson/EPSON products. You may not modify the document. Epson Research and Development, Inc. disclaims any representation that the contents of this document are accurate or current. The Programs/Technologies described in this document may contain material protected under U.S. and/or International Patent laws.

EPSON is a registered trademark of Seiko Epson Corporation. All other trademarks are the property of their respective owners.
Microsoft and Windows are registered trademarks of Microsoft Corporation.

THIS PAGE LEFT BLANK

Table of Contents

1 Introduction 7
2 Interfacing to the VR4102/VR4111 8
2.1 The NEC VR4102/VR4111 System Bus 8
2.1.1 Overview 8
2.1.2 LCD Memory Access Cycles 9
3 S1D13505 Host Bus Interface 10
3.1 Host Bus Interface Pin Mapping 10
3.2 Host Bus Interface Signals Descriptions 11
4 VR4102/VR4111 to S1D13505 Interface 12
4.1 Hardware Description 12
4.2 S1D13505 Hardware Configuration 13
4.3 NEC VR4102/VR4111 Configuration 13
5 Software 14
6 References 15
6.1 Documents 15
6.2 Document Sources 15
7 Technical Support 16
7.1 EPSON LCD/CRT Controllers (S1D13505) 16
7.2 NEC Electronics Inc. (VR4102/VR4111). 16

THIS PAGE LEFT BLANK

List of Tables

Table 3-1: Host Bus Interface Pin Mapping 10
Table 4-1: Summary of Power-On/Reset Options 13

List of Figures

Figure 2-1: NEC VR4102/VR4111 Read/Write Cycles 9
Figure 4-1: NEC VR4102/VR4111 to S1D13505 Configuration Schematic 12

THIS PAGE LEFT BLANK

1 Introduction

This application note describes the hardware and software environment necessary to provide an interface between the S1D13505 Embedded RAMDAC LCD/CRT Controller and the NEC VR4102™ (μPD30102) or VR4111™ (μPD30111) Microprocessors.

The designs described in this document are presented only as examples of how such interfaces might be implemented. This application note will be updated as appropriate. Please check the Epson Electronics America Website at http://www.eea.epson.com for the latest revision of this document before beginning any development.

We appreciate your comments on our documentation. Please contact us via email at techpubs@erd.epson.com.

2 Interfacing to the VR4102/VR4111

2.1 The NEC VR4102/VR4111 System Bus

The VR-Series family of microprocessors features a high-speed synchronous system bus typical of modern microprocessors. Designed with external LCD controller support and Windows CE based embedded consumer applications in mind, the VR4102/VR4111 offers a highly integrated solution for portable systems. This section provides an overview of the operation of the CPU bus in order to establish interface requirements.

2.1.1 Overview

The NEC VR4102/VR4111 is designed around the RISC architecture developed by MIPS. This microprocessor is based on the 66MHz VR4100 CPU core which supports 64-bit processing. The CPU communicates with the Bus Control Unit (BCU) using its internal SysAD bus. The BCU in turn communicates with external devices using its ADD and DAT buses which can be dynamically sized for 16 or 32-bit operation.

The NEC VR4102/VR4111 has direct support for an external LCD controller. Specific control signals are assigned for an external LCD controller providing an easy interface to the CPU. A 16M byte block of memory is assigned for the LCD controller and its own chip select and ready signals are available. Word or byte accesses are controlled by the system high byte signal (SHB#).

2.1.2 LCD Memory Access Cycles

Once an address in the LCD block of memory is placed on the external address bus (ADD[25:0]), the LCD chip select (LCDCS#) is driven low. The read or write enable signals (RD# or WR#) are driven low for the appropriate cycle and LCDRDY is driven low to insert wait states into the cycle. The high byte enable (SHB#) in conjunction with address bit 0 allows for byte steering.

The following figure illustrates typical NEC VR4102/VR4111 memory read and write cycles to the LCD controller interface.

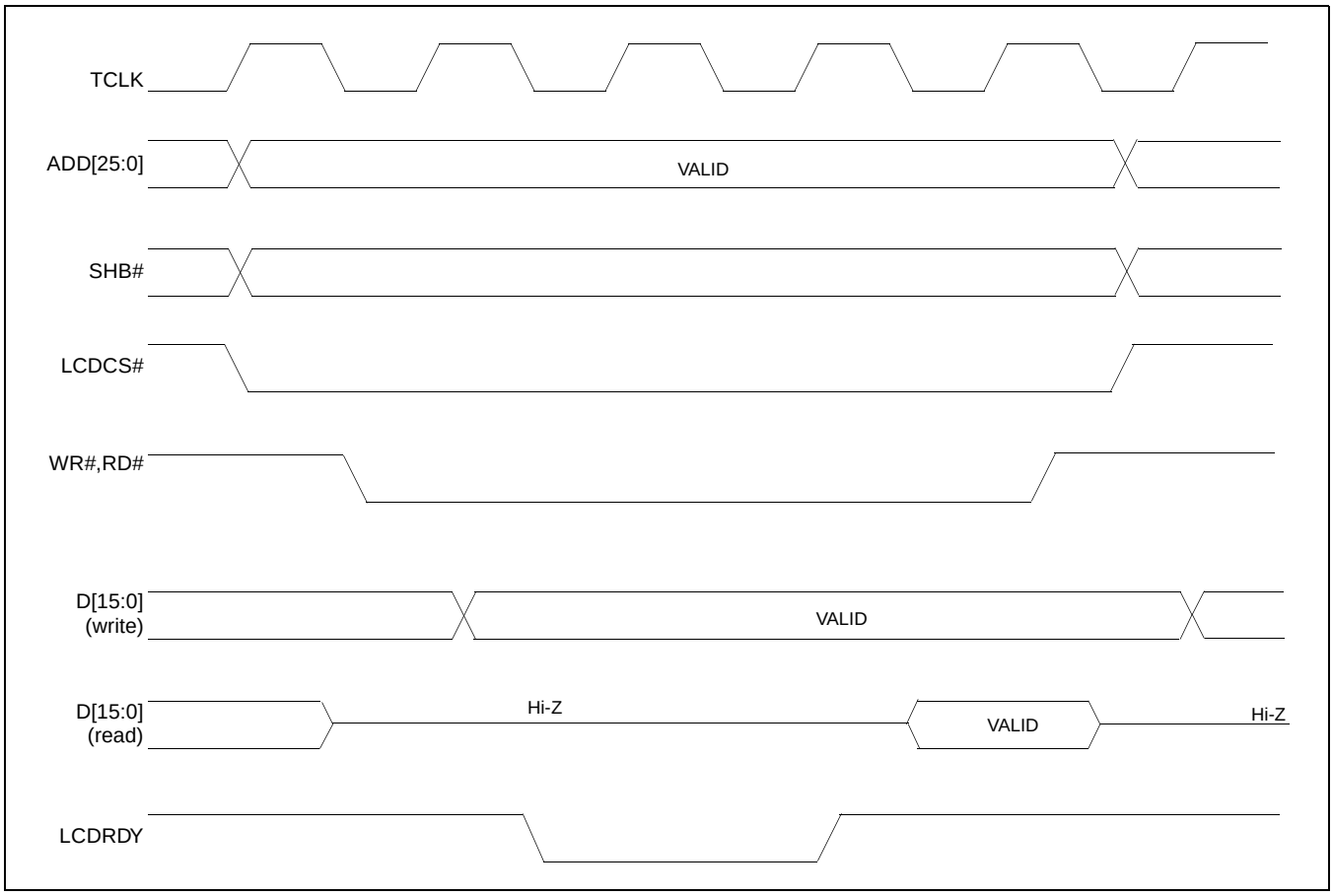

Figure 2-1: NEC VR4102/VR4111 Read/Write Cycles

3 S1D13505 Host Bus Interface

The S1D13505 directly supports multiple processors. The S1D13505 implements a 16-bit MIPS/ISA Host Bus Interface which is most suitable for direct connection to the VR4102/VR4111 microprocessor.

The MIPS/ISA host bus interface is selected by the S1D13505 on the rising edge of RESET#. After releasing reset the bus interface signals assume their selected configuration. For details on S1D13505 configuration, see Section 4.2, “S1D13505 Hardware Configuration” on page 13.

Note

At reset, the Host Interface Disable bit in the Miscellaneous Disable Register (REG[1Bh] bit 7) is set to 1. This means that only REG[1Ah] (read-only) and REG[1Bh] are accessible **until a write to REG[1Bh] sets bit 7 to 0 making all registers accessible**. When debugging a new hardware design, this can sometimes give the appearance that the interface is not working, so it is important to remember to clear this bit before proceeding with debugging.

3.1 Host Bus Interface Pin Mapping

The following table shows the functions of each host bus interface signal.

Table 3-1: Host Bus Interface Pin Mapping

S1D13505 Pin Name	NEC VR4102/VR4111 Pin Name
AB20	ADD20
AB[19:0]	ADD[19:0]
DB[15:0]	DAT[15:0]
WE1#	SHB#
M/R#	ADD21
CS#	LCDCS#
BUSCLK	BUSCLK
BS#	Connected to V_{DD}
RD/WR#	Connected to V_{DD}
RD#	RD#
WE0#	WR#
WAIT#	LCDRDY
RESET#	connected to system reset

3.2 Host Bus Interface Signals Descriptions

The S1D13505 MIPS/ISA Host Bus Interface requires the following signals.

- BUSCLK is a clock input which is required by the S1D13505 Host Bus Interface. It is separate from the input clock (CLKI) and is typically driven by the host CPU system clock.
- The address inputs AB[20:0], and the data bus DB[15:0], connect directly to the VR4102/VR4111 address (ADD[20:0]) and data bus (DAT[15:0]), respectively. MD4 must be set to select the proper endian mode upon reset.
- M/R# (memory/register) selects between memory or register access. It may be connected to an address line, allowing system address ADD21 to be connected to the M/R# line.
- Chip Select (CS#) must be driven low by LCDCS# whenever the S1D13505 is accessed by the VR4102/VR4111.
- WE1# connects to SHB# (the high byte enable signal from the VR4102/VR4111) which in conjunction with address bit 0 allows byte steering of read and write operations.
- WE0# connects to WR# (the write enable signal from the VR4102/VR4111) and must be driven low when the VR4102/VR4111 is writing data to the S1D13505.
- RD# connects to RD# (the read enable signal from the VR4102/VR4111) and must be driven low when the VR4102/VR4111 is reading data from the S1D13505.
- WAIT# connects to LCDRDY and is a signal output from the S1D13505 that indicates the VR4102/VR4111 must wait until data is ready (read cycle) or accepted (write cycle) on the host bus. Since VR4102/VR4111 accesses to the S1D13505 may occur asynchronously to the display update, it is possible that contention may occur in accessing the S1D13505 internal registers and/or display buffer. The WAIT# line resolves these contentions by forcing the host to wait until the resource arbitration is complete.
- The BS# and RD/WR# signals are not used for the MIPS/ISA Host Bus Interface and should be tied high (connected to V_{DD}).

4 VR4102/VR4111 to S1D13505 Interface

4.1 Hardware Description

The NEC VR4102/VR4111 Microprocessors are specifically designed to support an external LCD controller. They provide the necessary internal address decoding and control signals.

The diagram below shows a typical implementation utilizing the S1D13505.

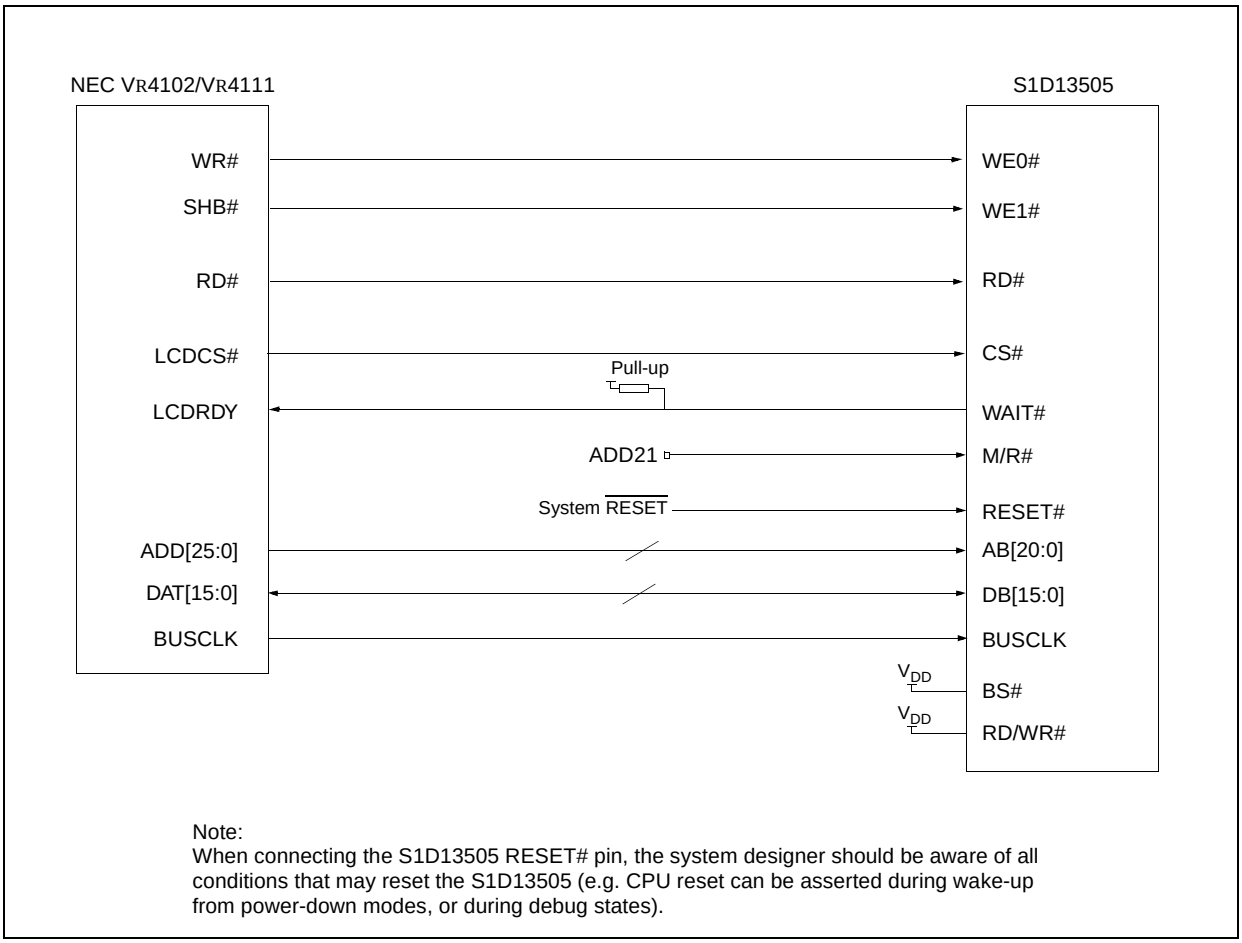

Figure 4-1: NEC VR4102/VR4111 to S1D13505 Configuration Schematic

Note

For pin mapping see Table 3-1:, “Host Bus Interface Pin Mapping,” on page 10.

4.2 S1D13505 Hardware Configuration

The S1D13505 latches MD15 through MD0 to allow selection of the bus mode and other configuration data on the rising edge of RESET#. For details on configuration, refer to the *S1D13505 Hardware Functional Specification*, document number X23A-A-001-xx.

The table below shows those configuration settings important to the NEC VR4102/VR4111 CPU interface.

Table 4-1: Summary of Power-On/Reset Options

S1D13505 Pin Name	**value on this pin at rising edge of RESET# is used to configure:**(1/0)	
	1	**0**
MD0	8-bit host bus interface	16-bit host bus interface
MD[3:1]	101 = MIPS/ISA bus interface	
MD4	Little Endian	Big Endian
MD5	WAIT# is active high (1 = insert wait state)	WAIT# is active low (0 = insert wait state)
MD11	Alternate Host Bus Interface Selected	Primary Host Bus Interface Selected

= configuration for NEC VR4102/VR4111 microprocessor

4.3 NEC VR4102/VR4111 Configuration

NEC VR4102/VR4111The NEC VR4102/VR4111 provides the internal address decoding necessary to map an external LCD controller. Physical address 0A00 0000h to 0AFF FFFFh (16M bytes) is reserved for an external LCD controller.

The S1D13505 supports up to 2M bytes of display buffer. The NEC VR4102/VR4111 address line A21 is used to select between the S1D13505 display buffer (A21=1) and internal registers (A21=0).

The NEC VR4102/VR4111 has a 16-bit internal register named BCUCNTREG2 located at address 0B00 0002h. It must be set to the value of 0001h to indicate that LCD controller accesses using a non-inverting data bus.

5 Software

Test utilities and Windows® CE v2.0 display drivers are available for the S1D13505. Full source code is available for both the test utilities and the drivers.

The test utilities are configurable for different panel types using a program called 13505CFG, or by directly modifying the source. The Windows CE v2.0 display drivers can be customized by the OEM for different panel types, resolutions and color depths only by modifying the source.

The S1D13505 test utilities and Windows CE v2.0 display drivers are available from your sales support contact or on the internet at http://www.eea.epson.com.

6 References

6.1 Documents

- NEC Electronics Inc., *VR4102 Preliminary Users Manual*, Document Number U12739EJ2V0UM00.
- NEC Electronics Inc., *VR4111 Preliminary Users Manual*, Document Number U13137EJ2V0UM00.
- Epson Research and Development, Inc., *S1D13505 Hardware Functional Specification*, Document Number X23A-A-001-xx.
- Epson Research and Development, Inc., *S5U13505B00C Rev. 1.0 ISA Bus Evaluation Board User Manual*, Document Number X23A-G-004-xx.
- Epson Research and Development, Inc., *S1D13505 Programming Notes and Examples*, Document Number X23A-G-003-xx.

6.2 Document Sources

- NEC Electronics Website: http://www.necel.com.
- Epson Electronics America Website: http://www.eea.epson.com.

7 Technical Support

7.1 EPSON LCD/CRT Controllers (S1D13505)

Japan
Seiko Epson Corporation
Electronic Devices Marketing Division
421-8, Hino, Hino-shi
Tokyo 191-8501, Japan
Tel: 042-587-5812
Fax: 042-587-5564
http://www.epson.co.jp

Hong Kong
Epson Hong Kong Ltd.
20/F., Harbour Centre
25 Harbour Road
Wanchai, Hong Kong
Tel: 2585-4600
Fax: 2827-4346

North America
Epson Electronics America, Inc.
150 River Oaks Parkway
San Jose, CA 95134, USA
Tel: (408) 922-0200
Fax: (408) 922-0238
http://www.eea.epson.com

Europe
Epson Europe Electronics GmbH
Riesstrasse 15
80992 Munich, Germany
Tel: 089-14005-0
Fax: 089-14005-110

Taiwan, R.O.C.
Epson Taiwan Technology
& Trading Ltd.
10F, No. 287
Nanking East Road
Sec. 3, Taipei, Taiwan, R.O.C.
Tel: 02-2717-7360
Fax: 02-2712-9164

Singapore
Epson Singapore Pte., Ltd.
No. 1
Temasek Avenue #36-00
Millenia Tower
Singapore, 039192
Tel: 337-7911
Fax: 334-2716

7.2 NEC Electronics Inc. (V_R4102/V_R4111).

NEC Electronics Inc. (U.S.A.)
Corporate Headquarters
2880 Scott Blvd.
Santa Clara, CA 95050-8062, USA
Tel: (800) 366-9782
Fax: (800) 729-9288
http://www.nec.com

S1D13505 Embedded RAMDAC LCD/CRT Controller

Interfacing to the Motorola MPC821 Microprocessor

Document Number: X23A-G-008-05

Copyright © 1998, 2001 Epson Research and Development, Inc. All Rights Reserved.

Information in this document is subject to change without notice. You may download and use this document, but only for your own use in evaluating Seiko Epson/EPSON products. You may not modify the document. Epson Research and Development, Inc. disclaims any representation that the contents of this document are accurate or current. The Programs/Technologies described in this document may contain material protected under U.S. and/or International Patent laws.

EPSON is a registered trademark of Seiko Epson Corporation. All other trademarks are the property of their respective owners.

THIS PAGE LEFT BLANK

Table of Contents

1 Introduction . . . 7
2 Interfacing to the MPC821 . . . 8
2.1 The MPC8xx System Bus . . . 8
2.2 MPC821 Bus Overview . . . 8
2.2.1 Normal (Non-Burst) Bus Transactions . . . 9
2.2.2 Burst Cycles . . . 10
2.3 Memory Controller Module . . . 11
2.3.1 General-Purpose Chip Select Module (GPCM) . . . 11
2.3.2 User-Programmable Machine (UPM) . . . 12
3 S1D13505 Host Bus Interface . . . 13
3.1 PowerPC Host Bus Interface Pin Mapping . . . 13
3.2 PowerPC Host Bus Interface Signals . . . 14
4 MPC821 to S1D13505 Interface . . . 15
4.1 Hardware Description . . . 15
4.2 Hardware Connections . . . 16
4.3 S1D13505 Hardware Configuration . . . 18
4.4 Register/Memory Mapping . . . 18
4.5 MPC821 Chip Select Configuration . . . 19
4.6 Test Software . . . 20
5 Software . . . 21
6 References . . . 22
6.1 Documents . . . 22
6.2 Document Sources . . . 22
7 Technical Support . . . 23
7.1 EPSON LCD/CRT Controllers (S1D13505) . . . 23
7.2 Motorola MPC821 Processor . . . 23

THIS PAGE LEFT BLANK

List of Tables

Table 3-1: PowerPC Host Bus Interface Pin Mapping 13
Table 4-1: List of Connections from MPC821ADS to S1D13505 16
Table 4-2: Summary of Power-On/Reset Options 18

List of Figures

Figure 2-1: Power PC Memory Read Cycle 9
Figure 2-2: Power PC Memory Write Cycle 10
Figure 4-1: Typical Implementation of MPC821 to S1D13505 Interface 15

THIS PAGE LEFT BLANK

1 Introduction

This application note describes the hardware and software environment required to provide an interface between the S1D13505 Embedded RAMDAC LCD/CRT Controller and the Motorola MPC821 processor.

The designs described in this document are presented only as examples of how such interfaces might be implemented. This application note will be updated as appropriate. Please check the Epson Electronics America Website at http://www.eea.epson.com for the latest revision of this document before beginning any development.

We appreciate your comments on our documentation. Please contact us via email at documentation@erd.epson.com.

2 Interfacing to the MPC821

2.1 The MPC8xx System Bus

The MPC8xx family of processors feature a high-speed synchronous system bus typical of modern RISC microprocessors. This section provides an overview of the operation of the CPU bus in order to establish interface requirements.

2.2 MPC821 Bus Overview

The MPC8xx microprocessor family uses a synchronous address and data bus. All IO is synchronous to a square-wave reference clock called MCLK (Master Clock). This clock runs at the machine cycle speed of the CPU core (typically 25 to 50 MHz). Most outputs from the processor change state on the rising edge of this clock. Similarly, most inputs to the processor are sampled on the rising edge.

Note

The external bus can run at one-half the CPU core speed using the clock control register. This is typically used when the CPU core is operated above 50 MHz.

The MPC821 can generate up to eight independent chip select outputs, each of which may be controlled by one of two types of timing generators: the General Purpose Chip Select Module (GPCM) or the User-Programmable Machine (UPM). Examples are given using the GPCM.

It should be noted that all Power PC microprocessors, including the MPC8xx family, use bit notation opposite from the convention used by most other microprocessor systems. Bit numbering for the MPC8xx always starts with zero as the most significant bit, and increments in value to the least-significant bit. For example, the most significant bits of the address bus and data bus are A0 and D0, while the least significant bits are A31 and D31.

The MPC8xx uses both a 32-bit address and data bus. A parity bit is supported for each of the four byte lanes on the data bus. Parity checking is done when data is read from external memory or peripherals, and generated by the MPC8xx bus controller on write cycles. All IO accesses are memory-mapped meaning there is no separate IO space in the Power PC architecture.

Support is provided for both on-chip (DMA controllers) and off-chip (other processors and peripheral controllers) bus masters. For further information on this topic, refer to Section 6, “References” on page 22.

The bus can support both normal and burst cycles. Burst memory cycles are used to fill on-chip cache memory, and for certain on-chip DMA operations. Normal cycles are used for all other data transfers.

2.2.1 Normal (Non-Burst) Bus Transactions

A data transfer is initiated by the bus master by placing the memory address on address lines A0 through A31 and driving $\overline{TS}$ (Transfer Start) low for one clock cycle. Several control signals are also provided with the memory address:

- TSIZ[0:1] (Transfer Size) -- indicates whether the bus cycle is 8, 16, or 32-bit.
- RD/$\overline{WR}$ -- set high for read cycles and low for write cycles.
- AT[0:3] (Address Type Signals) -- provides more detail on the type of transfer being attempted.

When the peripheral device being accessed has completed the bus transfer, it asserts $\overline{TA}$ (Transfer Acknowledge) for one clock cycle to complete the bus transaction. Once $\overline{TA}$ has been asserted, the MPC821 will not start another bus cycle until $\overline{TA}$ has been de-asserted. The minimum length of a bus transaction is two bus clocks.

Figure 2-1: “Power PC Memory Read Cycle” on page 9 illustrates a typical memory read cycle on the Power PC system bus.

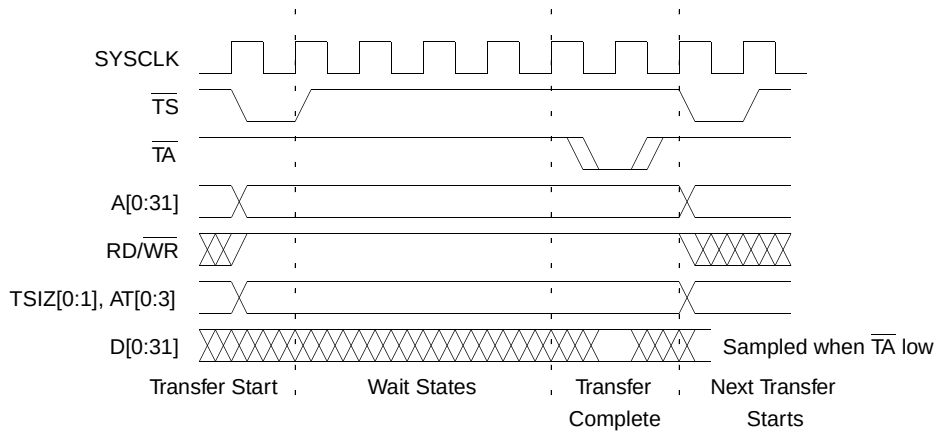

Figure 2-1: Power PC Memory Read Cycle

Figure 2-2: “Power PC Memory Write Cycle” on page 10 illustrates a typical memory write cycle on the Power PC system bus.

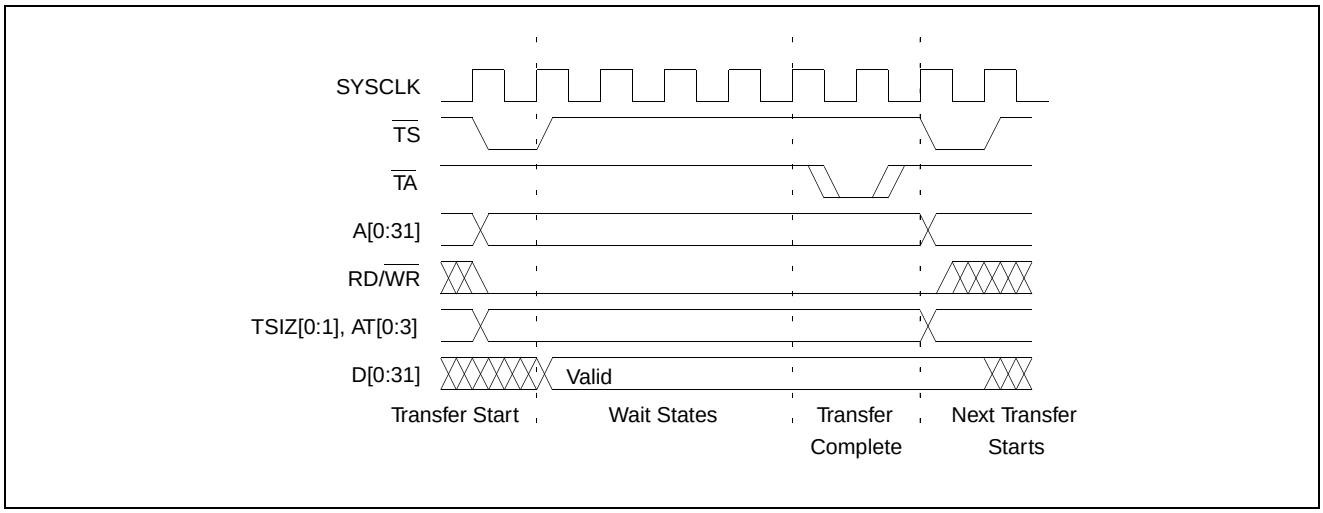

Figure 2-2: Power PC Memory Write Cycle

If an error occurs, $\overline{\text{TEA}}$ (Transfer Error Acknowledge) is asserted and the bus cycle is aborted. For example, a peripheral device may assert $\overline{\text{TEA}}$ if a parity error is detected, or the MPC821 bus controller may assert $\overline{\text{TEA}}$ if no peripheral device responds at the addressed memory location within a bus time-out period.

For 32-bit transfers, all data lines (D[0:31]) are used and the two low-order address lines A30 and A31 are ignored. For 16-bit transfers, data lines D[0:15] are used and address line A31 is ignored. For 8-bit transfers, data lines D[0:7] are used and all address lines (A[0:31]) are used.

Note

This assumes that the Power PC core is operating in big endian mode (typically the case for embedded systems).

2.2.2 Burst Cycles

Burst memory cycles are used to fill on-chip cache memory and to carry out certain on-chip DMA operations. They are very similar to normal bus cycles with the following exceptions:

- Always 32-bit.
- Always attempt to transfer four 32-bit words sequentially.
- Always address longword-aligned memory (i.e. A30 and A31 are always 0:0).
- Do not increment address bits A28 and A29 between successive transfers; the addressed device must increment these address bits internally.

If a peripheral is not capable of supporting burst cycles, it can assert Burst Inhibit ($\overline{BI}$) simultaneously with $\overline{TA}$, and the processor will revert to normal bus cycles for the remaining data transfers.

Burst cycles are mainly intended to facilitate cache line fills from program or data memory. They are normally not used for transfers to/from IO peripheral devices such as the S1D13505, therefore the interfaces described in this document do not attempt to support burst cycles. However, the example interfaces include circuitry to detect the assertion of $\overline{BDIP}$ and respond with $\overline{BI}$ if caching is accidently enabled for the S1D13505 address space.

2.3 Memory Controller Module

2.3.1 General-Purpose Chip Select Module (GPCM)

The General-Purpose Chip Select Module (GPCM) is used to control memory and peripheral devices which do not require special timing or address multiplexing. In addition to the chip select output, it can generate active-low Output Enable ($\overline{OE}$) and Write Enable ($\overline{WE}$) signals compatible with most memory and x86-style peripherals. The MPC821 bus controller also provides a Read/Write (RD/$\overline{WR}$) signal which is compatible with most 68K peripherals.

The GPCM is controlled by the values programmed into the Base Register (BR) and Option Register (OR) of the respective chip select. The Option Register sets the base address, the block size of the chip select, and controls the following timing parameters:

- The ACS bit field allows the chip select assertion to be delayed by 0, ¼, or ½ clock cycle with respect to the address bus valid.
- The CSNT bit causes chip select and $\overline{WE}$ to be negated ½ clock cycle earlier than normal.
- The TRLX (relaxed timing) bit will insert an additional one clock delay between assertion of the address bus and chip select. This accommodates memory and peripherals with long setup times.
- The EHTR (Extended hold time) bit will insert an additional 1 clock delay on the first access to a chip select.
- Up to 15 wait states may be inserted, or the peripheral can terminate the bus cycle itself by asserting $\overline{TA}$ (Transfer Acknowledge).
- Any chip select may be programmed to assert $\overline{BI}$ (Burst Inhibit) automatically when its memory space is addressed by the processor core.

2.3.2 User-Programmable Machine (UPM)

The UPM is typically used to control memory types, such as Dynamic RAMs, which have complex control or address multiplexing requirements. The UPM is a general purpose RAM-based pattern generator which can control address multiplexing, wait state generation, and five general-purpose output lines on the MPC821. Up to 64 pattern locations are available, each 32 bits wide. Separate patterns may be programmed for normal accesses, burst accesses, refresh (timer) events, and exception conditions. This flexibility allows almost any type of memory or peripheral device to be accommodated by the MPC821.

In this application note, the GPCM is used instead of the UPM, since the GPCM has enough flexibility to accommodate the S1D13505 and it is desirable to leave the UPM free to handle other interfacing duties, such as EDO DRAM.

3 S1D13505 Host Bus Interface

The S1D13505 implements a 16-bit native PowerPC host bus interface which is used to interface to the MPC821 microprocessor.

The PowerPC host bus interface is selected by the S1D13505 on the rising edge of RESET#. After releasing reset the bus interface signals assume their selected configuration. For details on S1D13505 configuration, see Section 4.3, “S1D13505 Hardware Configuration” on page 18.

Note

At reset, the Host Interface Disable bit in the Miscellaneous Disable Register (REG[1Bh] bit 7) is set to 1. This means that only REG[1Ah] (read-only) and REG[1Bh] are accessible **until a write to REG[1Bh] sets bit 7 to 0 making all registers accessible**. When debugging a new hardware design, this can sometimes give the appearance that the interface is not working, so it is important to remember to clear this bit before proceeding with debugging.

3.1 PowerPC Host Bus Interface Pin Mapping

The following table shows the functions of each host bus interface signal.

Table 3-1: PowerPC Host Bus Interface Pin Mapping

S1D13505 Pin Names	PowerPC
AB[20:0]	A[11:31]
DB[15:0]	D[0:15]
WE1#	$\overline{BI}$
M/R#	External Decode
CS#	External Decode
BUSCLK	CLKOUT
BS#	$\overline{TS}$
RD/WR#	$\overline{RD/WR}$
RD#	TSIZ0
WE0#	TSIZ1
WAIT#	$\overline{TA}$
RESET#	RESET#

3.2 PowerPC Host Bus Interface Signals

The interface requires the following signals:

- BUSCLK is a clock input which is required by the S1D13505 host bus interface. It is separate from the input clock (CLKI) and is typically driven by the host CPU system clock.
- The address inputs AB[20:0], and the data bus DB[15:0], connect directly to the PowerPC bus address (A[11:31]) and data bus (D[0:15]), respectively. MD4 must be set to select the proper endian mode upon reset.
- M/R# (memory/register) selects between memory or register access. It may be connected to an address line, allowing system address A10 to be connected to the M/R# line.
- Chip Select (CS#) must be driven low whenever the S1D13505 is accessed by the PowerPC bus.
- RD/WR# connects to $\overline{\text{RD/WR}}$ which indicates whether a read or a write access is being performed on the S1D13505.
- WE1# connects to $\overline{\text{BI}}$ (burst inhibit signal). WE1# is output by the S1D13505 to indicate whether the S1D13505 is able to perform burst accesses.
- WE0# and RD# connect to TSIZ1 and TSIZ0 (high and low byte enable signals). These signals must be driven by the PowerPC bus to indicate the size of the transfer taking place on the bus.
- WAIT# connects to $\overline{\text{TA}}$ and is output from the S1D13505 that indicates the PowerPC bus must wait until data is ready (read cycle) or accepted (write cycle) on the host bus. Since the PowerPC bus accesses to the S1D13505 may occur asynchronously to the display update, it is possible that contention may occur in accessing the S1D13505 internal registers and/or display buffer. The WAIT# line resolves these contentions by forcing the host to wait until the resource arbitration is complete.
- The Bus Start (BS#) signal connects to $\overline{\text{TS}}$ (the transfer start signal).

4 MPC821 to S1D13505 Interface

4.1 Hardware Description

The S1D13505 provides native Power PC bus support making it very simple to interface the two devices. This application note describes both the environment necessary to connect the S1D13505 to the MPC821 native system bus and the connection between the S5U13505B00B Evaluation Board and the Motorola MPC821 Application Development System (ADS).

Additionally, by implementing a dedicated display buffer, the S1D13505 can reduce system power consumption, improve image quality, and increase system performance as compared to the MPC821's on-chip LCD controller.

The S1D13505, through the use of the MPC821 chip selects, can share the system bus with all other MPC821 peripherals. The following figure demonstrates a typical implementation of the S1D13505 to MPC821 interface.

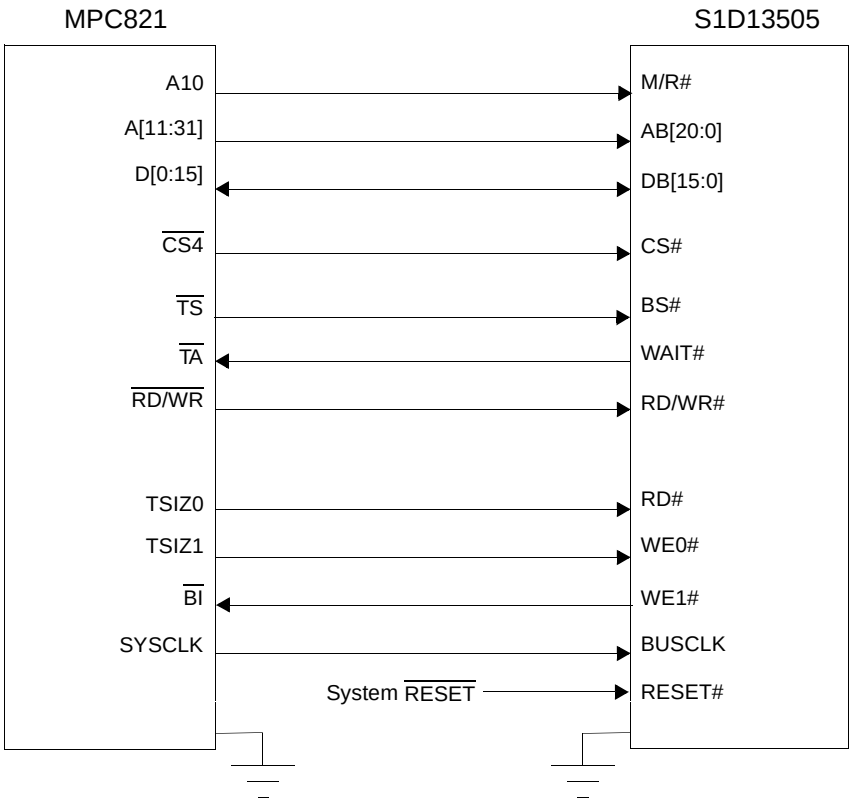

Note: When connecting the S1D13505 RESET# pin, the system designer should be aware of all conditions that may reset the S1D13505 (e.g. CPU reset can be asserted during wake-up from power-down modes, or during debug states).

Figure 4-1: Typical Implementation of MPC821 to S1D13505 Interface

Table 4-1:,“List of Connections from MPC821ADS to S1D13505” on page 16 shows the connections between the pins and signals of the MPC821 and the S1D13505.

Note

The interface was designed using a Motorola MPC821 Application Development System (ADS). The ADS board has 5 volt logic connected to the data bus, so the interface included two 74F245 octal buffers on D[0:15] between the ADS and the S1D13505. In a true 3 volt system, no buffering is necessary.

4.2 Hardware Connections

The following table details the connections between the pins and signals of the MPC821 and the S1D13505.

Table 4-1: List of Connections from MPC821ADS to S1D13505

MPC821 Signal Name	MPC821ADS Connector and Pin Name	S1D13505 Signal Name
Vcc	P6-A1, P6-B1	Vcc
A10	P6-C23	M/R#
A11	P6-A22	AB20
A12	P6-B22	AB19
A13	P6-C21	AB18
A14	P6-C20	AB17
A15	P6-D20	AB16
A16	P6-B24	AB15
A17	P6-C24	AB14
A18	P6-D23	AB13
A19	P6-D22	AB12
A20	P6-D19	AB11
A21	P6-A19	AB10
A22	P6-D28	AB9
A23	P6-A28	AB8
A24	P6-C27	AB7
A25	P6-A26	AB6
A26	P6-C26	AB5
A27	P6-A25	AB4
A28	P6-D26	AB3
A29	P6-B25	AB2
A30	P6-B19	AB1
A31	P6-D17	AB0
D0	P12-A9	DB15
D1	P12-C9	DB14
D2	P12-D9	DB13
D3	P12-A8	DB12
D4	P12-B8	DB11
D5	P12-D8	DB10
D6	P12-B7	DB9
D7	P12-C7	DB8

Table 4-1: List of Connections from MPC821ADS to S1D13505 (Continued)

MPC821 Signal Name	MPC821ADS Connector and Pin Name	S1D13505 Signal Name
D8	P12-A15	DB7
D9	P12-C15	DB6
D10	P12-D15	DB5
D11	P12-A14	DB4
D12	P12-B14	DB3
D13	P12-D14	DB2
D14	P12-B13	DB1
D15	P12-C13	DB0
SRESET	P9-D15	RESET#
SYSCLK	P9-C2	BUSCLK
CS4	P6-D13	CS#
TS	P6-B7	BS#
TA	P6-B6	WAIT#
R/W	P6-D8	RD/WR#
TSIZ0	P6-B18	RD#
TSIZ1	P6-C18	WE0#
BI	P6-B9	WE1#
Gnd	P12-A1, P12-B1, P12-A2, P12-B2, P12-A3, P12-B3, P12-A4, P12-B4, P12-A5, P12-B5, P12-A6, P12-B6, P12-A7	Vss

Note

Note that the bit numbering of the Power PC bus signals is reversed. e.g. the most significant address bit is A0, the next is A1, A2, etc.

4.3 S1D13505 Hardware Configuration

The S1D13505 latches MD15 through MD0 to allow selection of the bus mode and other configuration data on the rising edge of RESET#. For details on configuration, refer to the *S1D13505 Hardware Functional Specification*, document number X23A-A-001-xx.

The following table shows those configuration settings important to the MPC821 host bus interface.

Table 4-2: Summary of Power-On/Reset Options

S1D13505 Pin Name	**value on this pin at rising edge of RESET# is used to configure:** (1/0)	
	1	**0**
MD0	8-bit host bus interface	16-bit host bus interface
MD[3:1]	110 = PowerPC host bus interface selected	
MD4	Little Endian	Big Endian
MD5	Wait# signal is active high	Wait# signal is active low
MD9	Reserved	Configure SUSPEND# pin as Hardware Suspend Enable
MD11	Alternate Host Bus Interface Selected	Primary Host Bus Interface Selected
	= required settings for MPC821 support.	

4.4 Register/Memory Mapping

The DRAM on the MPC821 ADS board extends from address 0 through 3F FFFFh, so the S1D13505 is addressed starting at 40 0000h. A total of 4M bytes of address space is used, where the lower 2M bytes is reserved for the S1D13505 on-chip registers and the upper 2M bytes is used to access the S1D13505 display buffer.

4.5 MPC821 Chip Select Configuration

Chip select 4 is used to control the S1D13505. The following options are selected in the base address register (BR4):

- BA[0:16] = 0000 0000 0100 0000 0 – set starting address of S1D13505 to 40 0000h.
- AT[0:2] = 0 – ignore address type bits.
- PS[0:1] = 1:0 – memory port size is 16-bit.
- PARE = 0 – disable parity checking.
- WP = 0 – disable write protect.
- MS[0:1] = 0:0 – select General Purpose Chip Select module to control this chip select.
- V = 1 – set valid bit to enable chip select.

The following options were selected in the option register (OR4):

- AM[0:16] = 1111 1111 1100 0000 0 – mask all but upper 10 address bits; S1D13505 consumes 4M byte of address space.
- ATM[0:2] = 0 – ignore address type bits.
- CSNT = 0 – normal $\overline{CS}$/$\overline{WE}$ negation.
- ACS[0:1] = 1:1 – delay $\overline{CS}$ assertion by ½ clock cycle from address lines.
- BI = 0 – do not assert Burst Inhibit.
- SCY[0:3] = 0 – wait state selection; this field is ignored since external transfer acknowledge is used; see SETA below.
- SETA = 1 – the S1D13505 generates an external transfer acknowledge using the WAIT# line.
- TRLX = 0 – normal timing.
- EHTR = 0 – normal timing.

4.6 Test Software

The test software is very simple. It configures chip select 4 (CS4) on the MPC821 to map the S1D13505 to an unused 4M byte block of address space. Next, it loads the appropriate values into the option register for CS4 and writes the value 0 to the S1D13505 register REG[1Bh] to enable the S1D13505 host interface. Lastly, the software runs a tight loop that reads the S1D13505 Revision Code Register REG[00h]. This allows monitoring of the bus timing on a logic analyzer.

The following source code was entered into the memory of the MPC821ADS using the line-by-line assembler in MPC8BUG (the debugger provided with the ADS board). Once the program was executed on the ADS, a logic analyzer was used to verify operation of the interface hardware.

It is important to note that when the MPC821 comes out of reset, the on-chip caches and MMU are disabled. If the data cache is enabled, then the MMU must be set so that the S1D13505 memory block is tagged as non-cacheable. This ensures the MPC821 does not attempt to cache any data read from, or written to, the S1D13505 or its display buffer.

```
BR4             equ       $120              ; CS4 base register
OR4             equ       $124              ; CS4 option register
MemStart        equ       $40               ; upper word of S1D13505 start address
DisableReg      equ       $1b               ; address of S1D13505 Disable Register
RevCodeReg      equ       0                 ; address of Revision Code Register

Start           mfspr     r1,IMMR           ; get base address of internal registers
                andis.    r1,r1,$ffff       ; clear lower 16 bits to 0
                andis.    r2,r0,0           ; clear r2
                oris      r2,r2,MemStart    ; write base address
                ori       r2,r2,$0801       ; port size 16 bits; select GPCM; enable
                stw       r2,BR4(r1)        ; write value to base register
                andis.    r2,r0,0           ; clear r2
                oris      r2,r2,$ffc0       ; address mask – use upper 10 bits
                ori       r2,r2,$0608       ; normal CS negation; delay CS ½ clock;
                                            ; no burst inhibit (13505 does this)
                stw       r2,OR4(r1)        ; write to option register
                andis.    r1,r0,0           ; clear r1
                oris      r1,r1,MemStart    ; point r1 to start of S1D13505 mem space
                stb       r1,DisableReg(r1) ; write 0 to disable register
Loop            lbz       r0,RevCodeReg(r1) ; read revision code into r1
                b         Loop              ; branch forever

                end
```

Note

MPC8BUG does not support comments or symbolic equates; these have been added for clarity.

5 Software

Test utilities and Windows® CE display drivers are available for the S1D13505. Full source code is available for both the test utilities and the drivers.

The test utilities are configurable for different panel types using a program called 13505CFG, or by directly modifying the source. The Windows CE display drivers can be customized by the OEM for different panel types, resolutions and color depths only by modifying the source.

The S1D13505 test utilities and Windows CE display drivers are available from your sales support contact or on the internet at http://www.eea.epson.com.

6 References

6.1 Documents

- Motorola Inc., *Power PC MPC821 Portable Systems Microprocessor User's Manual*; Motorola Publication no. MPC821UM/AD.
- Epson Research and Development, Inc., *S1D13505 Hardware Functional Specification*, Document Number X23A-A-001-xx.
- Epson Research and Development, Inc., *S5U13505B00B Rev. 1.0 ISA Bus Evaluation Board User Manual*, Document Number X19A-G-001-xx.

6.2 Document Sources

- Motorola Literature Distribution Center: (800) 441-2447.
- Epson Electronics America Website: www.eea.epson.com.

7 Technical Support

7.1 EPSON LCD/CRT Controllers (S1D13505)

Japan
Seiko Epson Corporation
Electronic Devices Marketing Division
421-8, Hino, Hino-shi
Tokyo 191-8501, Japan
Tel: 042-587-5812
Fax: 042-587-5564
http://www.epson.co.jp

Hong Kong
Epson Hong Kong Ltd.
20/F., Harbour Centre
25 Harbour Road
Wanchai, Hong Kong
Tel: 2585-4600
Fax: 2827-4346

North America
Epson Electronics America, Inc.
150 River Oaks Parkway
San Jose, CA 95134, USA
Tel: (408) 922-0200
Fax: (408) 922-0238
http://www.eea.epson.com

Europe
Epson Europe Electronics GmbH
Riesstrasse 15
80992 Munich, Germany
Tel: 089-14005-0
Fax: 089-14005-110

Taiwan, R.O.C.
Epson Taiwan Technology
& Trading Ltd.
10F, No. 287
Nanking East Road
Sec. 3, Taipei, Taiwan, R.O.C.
Tel: 02-2717-7360
Fax: 02-2712-9164

Singapore
Epson Singapore Pte., Ltd.
No. 1
Temasek Avenue #36-00
Millenia Tower
Singapore, 039192
Tel: 337-7911
Fax: 334-2716

7.2 Motorola MPC821 Processor

- Motorola Design Line, (800) 521-6274.
- Local Motorola sales office or authorized distributor.

THIS PAGE LEFT BLANK

EPSON®

ENERGY SAVING EPSON

S1D13505 Embedded RAMDAC LCD/CRT Controller

Interfacing to the Toshiba MIPS TX3912 Processor

Document Number: X23A-G-010-04

Copyright © 1998, 2001 Epson Research and Development, Inc. All Rights Reserved.

Information in this document is subject to change without notice. You may download and use this document, but only for your own use in evaluating Seiko Epson/EPSON products. You may not modify the document. Epson Research and Development, Inc. disclaims any representation that the contents of this document are accurate or current. The Programs/Technologies described in this document may contain material protected under U.S. and/or International Patent laws.

EPSON is a registered trademark of Seiko Epson Corporation. All other trademarks are the property of their respective owners.

THIS PAGE LEFT BLANK

Table of Contents

1 Introduction 7
2 Interfacing to the TX3912 8
3 S1D13505 Host Bus Interface 9
3.1 TX3912 Host Bus Interface Pin Mapping 9
3.2 TX3912 Host Bus Interface Signals 10
4 Direct Connection to the Toshiba TX3912 11
4.1 Hardware Description 11
4.2 S1D13505 Configuration 12
4.3 Memory Mapping and Aliasing 13
5 System Design Using the IT8368E PC Card Buffer 14
5.1 Hardware Description 14
5.2 IT8368E Configuration 15
5.3 S1D13505 Configuration 15
6 Software 16
7 References 17
7.1 Documents 17
7.2 Document Sources 17
8 Technical Support 18
8.1 EPSON LCD/CRT Controllers (S1D13505) 18
8.2 Toshiba MIPS TX3912 Processor 18
8.3 ITE IT8368E 18

THIS PAGE LEFT BLANK

List of Tables

Table 3-1: TX3912 Host Bus Interface Pin Mapping 9
Table 4-1: S1D13505 Configuration for Direct Connection. 12
Table 4-2: TX3912 to PC Card Slots Address Remapping for Direct Connection 13

List of Figures

Figure 4-1: Typical Implementation of Direct Connection 11
Figure 5-1: IT8368E Implementation Block Diagram 14

THIS PAGE LEFT BLANK

1 Introduction

This application note describes the hardware and software environment necessary to provide an interface between the S1D13505 Embedded RAMDAC LCD/CRT Controller and the Toshiba MIPS TX3912 Processor.

The designs described in this document are presented only as examples of how such interfaces might be implemented. This application note will be updated as appropriate. Please check the Epson Electronics America website at http://www.eea.epson.com for the latest revision of this document before beginning any development.

We appreciate your comments on our documentation. Please contact us via email at techpubs@erd.epson.com.

2 Interfacing to the TX3912

The Toshiba MIPS TX3912 processor supports up to two PC Card (PCMCIA) slots. It is through this host bus interface that the S1D13505 connects to the TX3912 processor.

The S1D13505 can be successfully interfaced using one of the following configurations:

- Direct connection to the TX3912 (see Section 4, *"Direct Connection to the Toshiba TX3912"* on page 11).
- System design using the ITE IT8368E PC Card/GPIO buffer chip (see Section 5, *"System Design Using the IT8368E PC Card Buffer"* on page 14).

3 S1D13505 Host Bus Interface

The S1D13505 implements a 16-bit host bus interface specifically for interfacing to the TX3912 microprocessor.

The TX3912 host bus interface is selected by the S1D13505 on the rising edge of RESET#. After releasing reset, the bus interface signals assume their selected configuration. For details on S1D13505 configuration, see Section 4.2, *"S1D13505 Configuration"* on page 12.

Note

At reset, the Host Interface Disable bit in the Miscellaneous Disable Register (REG[1Bh] bit 7) is set to 1. This means that only REG[1Ah] (read-only) and REG[1Bh] are accessible **until a write to REG[1Bh] sets bit 7 to 0 making all registers accessible**. When debugging a new hardware design, this can sometimes give the appearance that the interface is not working, so it is important to remember to clear this bit before proceeding with debugging.

3.1 TX3912 Host Bus Interface Pin Mapping

The following table shows the function of each host bus interface signal.

Table 3-1: TX3912 Host Bus Interface Pin Mapping

S1D13505 Pin Names	Toshiba TX3912
AB20	ALE
AB19	CARDREG*
AB18	CARDIORD*
AB17	CARDIOWR*
AB[16:13]	V_{DD}
AB[12:0]	A[12:0]
DB[15:8]	D[23:16]
DB[7:0]	D[31:24]
WE1#	CARDxCSH*
M/R#	V_{DD}
CS#	V_{DD}
BUSCLK	DCLKOUT
BS#	V_{DD}
RD/WR#	CARDxCSL*
RD#	RD*
WE0#	WE*
WAIT#	CARDxWAIT*
RESET#	PON*

3.2 TX3912 Host Bus Interface Signals

When the S1D13505 is configured to operate with the TX3912, the host interface requires the following signals:

- BUSCLK is a clock input required by the S1D13505 host bus interface. It is separate from the input clock (CLKI) and should be driven by the TX3912 bus clock output DCLKOUT.
- Address input AB20 corresponds to the TX3912 signal ALE (address latch enable) whose falling edge indicates that the most significant bits of the address are present on the multiplexed address bus (AB[12:0]).
- Address input AB19 should be connected to the TX3912 signal CARDREG*. This signal is active when either IO or configuration space of the TX3912 PC Card slot is being accessed.
- Address input AB18 should be connected to the TX3912 signal CARDIORD*. Either AB18 or the RD# input must be asserted for a read operation to take place.
- Address input AB17 should be connected to the TX3912 signal CARDIOWR*. Either AB17 or the WE0# input must be asserted for a write operation to take place.
- Address inputs AB[16:13] and control inputs M/R#, CS# and BS# must be tied to V_{DD} as they are not used in this interface mode.
- Address inputs AB[12:0], and the data bus DB[15:0], connect directly to the TX3912 address and data bus, respectively. MD4 must be set to select the proper endian mode on reset (see Section 4.2, *"S1D13505 Configuration"* on page 12). **Because of the TX3912 data bus naming convention and endian mode, S1D13505 DB[15:8] must be connected to TX3912 D[23:16], and S1D13505 DB[7:0] must be connected to TX3912 D[31:24].**
- Control inputs WE1# and RD/WR# should be connected to the TX3912 signals CARDxCSH* and CARDxCSL* respectively for byte steering.
- Input RD# should be connected to the TX3912 signal RD*. Either RD# or the AB18 input (CARDIORD*) must be asserted for a read operation to take place.
- Input WE0# should be connected to the TX3912 signal WR*. Either WE0# or the AB17 input (CARDIOWR*) must be asserted for a write operation to take place.
- WAIT# is a signal output from the S1D13505 that indicates the TX3912 must wait until data is ready (read cycle) or accepted (write cycle) on the host bus. Since the TX3912 accesses to the S1D13505 may occur asynchronously to the display update, it is possible that contention may occur in accessing the S1D13505 internal registers and/or display buffer. The WAIT# line resolves these contentions by forcing the host to wait until the resource arbitration is complete.

4 Direct Connection to the Toshiba TX3912

The S1D13505 was specifically designed to support the Toshiba MIPS TX3912 processor. When configured, the S1D13505 will utilize one of the PC Card slots supported by the processor.

4.1 Hardware Description

In this example implementation, the S1D13505 occupies one PC Card slot and resides in the Attribute and IO address range. The processor provides address bits A[12:0], with A[23:13] being multiplexed and available on the falling edge of ALE. Peripherals requiring more than 8K bytes of address space would require an external latch for these multiplexed bits. However, the S1D13505 has an internal latch specifically designed for this processor making additional logic unnecessary. To further reduce the need for external components, the S1D13505 has an optional BUSCLK divide-by-2 feature, allowing the high speed DCLKOUT from the processor to be directly connected to the BUSCLK input of the S1D13505. An optional external oscillator may be used for BUSCLK since the S1D13505 will accept host bus control signals asynchronously with respect to BUSCLK.

The following diagram shows a typical implementation of the interface.

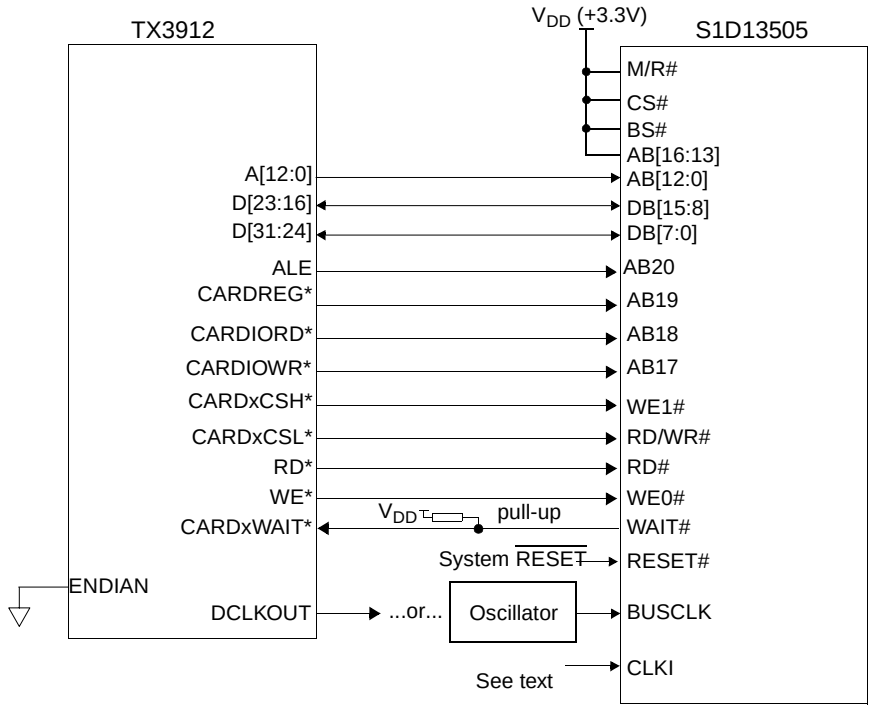

Note: When connecting the S1D13505 RESET# pin, the system designer should be aware of all conditions that may reset the S1D13505 (e.g. CPU reset can be asserted during wake-up from power-down modes, or during debug states).

Figure 4-1: Typical Implementation of Direct Connection

The host interface control signals of the S1D13505 are asynchronous with respect to the S1D13505 bus clock. This gives the system designer full flexibility to choose the appropriate source (or sources) for CLKI and BUSCLK. The choice of whether both clocks should be the same, whether to use DCLKOUT as clock source, and whether an external or internal clock divider is needed, should be based on the desired:

- pixel and frame rates.
- power budget.
- part count.
- maximum S1D13506 clock frequencies.

The S1D13505 also has internal CLKI dividers providing additional flexibility.

4.2 S1D13505 Configuration

The S1D13505 latches MD15 through MD0 to allow selection of the bus mode and other configuration data on the rising edge of RESET#. For details on configuration, refer to the *S1D13505 Hardware Functional Specification*, document number X23A-A-001-xx.

The table below shows those configuration settings relevant to the Toshiba TX3912 host bus interface.

Table 4-1: S1D13505 Configuration for Direct Connection

S1D13505 Pin Name	**Value on this pin at rising edge of RESET# is used to configure:**	
	1 (V_{DD})	**0 (V_{SS})**
MD0	8-bit host bus interface	16-bit host bus interface
MD[3:1]	111 = Toshiba TX3912 host bus interface if Alternate host bus interface is selected	
MD4	Little Endian	Big Endian
MD5	WAIT# is active high (1 = insert wait state)	WAIT# is active low (0 = insert wait state)
MD11	Alternate host bus interface selected	Primary host bus interface selected
MD12	BUSCLK input divided by two: use with DCLKOUT	BUSCLK input not divided: use with external oscillator

= configuration for Toshiba TX3912 host bus interface

4.3 Memory Mapping and Aliasing

The TX3912 uses a portion of the PC Card Attribute and IO space to access the S1D13505. The S1D13505 responds to both PC Card Attribute and IO bus accesses, thus freeing the programmer from having to set the TX3912 Memory Configuration Register 3 bit CARD1IOEN (or CARD2IOEN if slot 2 is used). As a result, the TX3912 sees the S1D13505 on its PC Card slot as described in the table below.

Table 4-2: TX3912 to PC Card Slots Address Remapping for Direct Connection

S1D13505 Uses PC Card Slot #	Toshiba Address	Size	Function
1	0800 0000h	16M byte	Card 1 IO or Attribute
	0900 0000h	8M byte	S1D13505 registers, aliased 4 times at 2M byte intervals
	0980 0000h	8M byte	S1D13505 display buffer, aliased 4 times at 2M byte intervals
	0A00 0000h	32M byte	Card 1 IO or Attribute
	6400 0000h	64M byte	Card 1 Memory
2	0C00 0000h	16M byte	Card 2 IO or Attribute
	0D00 0000h	8M byte	S1D13505 registers, aliased 4 times at 2M byte intervals
	0D80 0000h	8M byte	S1D13505 display buffer, aliased 4 times at 2M byte intervals
	0E00 0000h	32M byte	Card 2 IO or Attribute
	6800 0000h	64M byte	Card 2 Memory

5 System Design Using the IT8368E PC Card Buffer

In a system design using one or two ITE IT8368E PC Card and multiple-function IO buffers, the S1D13505 can be interfaced so as to share one of the PC Card slots.

5.1 Hardware Description

The IT8368E can be programmed to allocate the same portion of the PC Card Attribute and IO space to the S1D13505 as in the direct connection implementation described in Section 4, *"Direct Connection to the Toshiba TX3912"* on page 11.

Following is a block diagram showing an implementation using the IT8368E PC Card buffer.

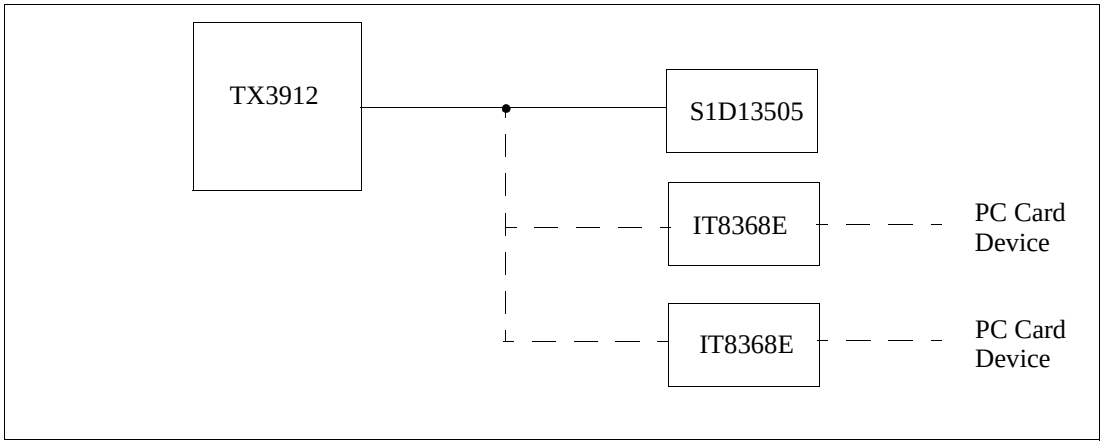

Figure 5-1: IT8368E Implementation Block Diagram

5.2 IT8368E Configuration

The ITE IT8368E has been specifically designed to support EPSON LCD/CRT controllers. Older EPSON Controllers not supporting a direct interface to the Toshiba processor can utilize the IT8368E MFIO pins to provide the necessary control signals, however when using the S1D13505 this is not necessary as the Direct Connection described in Section 4, *"Direct Connection to the Toshiba TX3912"* on page 11 can be used.

The IT8368E must have both "Fix Attribute/IO" and "VGA" modes enabled. When both these modes are enabled a 16M byte portion of the system PC Card attribute and IO space is allocated to address the S1D13505.

When the IT8368E senses that the S1D13505 is being accessed, it does not propagate the PC Card signals to its PC Card device. This makes S1D13505 accesses transparent to any PC Card device connected to the same slot.

For mapping details, refer to Section 4.3, *"Memory Mapping and Aliasing"* on page 13. For further information on configuring the IT8368E, refer to the *IT8368E PC Card/GPIO Buffer Chip Specification.*

5.3 S1D13505 Configuration

For S1D13505 configuration, refer to Section 4.2, *"S1D13505 Configuration"* on page 12.

6 Software

Test utilities and Windows® CE v2.0 display drivers are available for the S1D13505. Full source code is available for both the test utilities and the drivers.

The test utilities are configurable for different panel types using a program called 13505CFG, or by directly modifying the source. The Windows CE v2.0 display drivers can be customized by the OEM for different panel types, resolutions and color depths only by modifying the source.

The S1D13505 test utilities and Windows CE v2.0 display drivers are available from your sales support contact or on the internet at http://www.eea.epson.com.

7 References

7.1 Documents

- Toshiba America Electrical Components, Inc., *TX3905/12 Specification*.
- Epson Research and Development, Inc., *S1D13505 Hardware Functional Specification*, Document Number X23A-A-001-xx.
- Epson Research and Development, Inc., *S5U13505B00C Rev. 1.0 ISA Bus Evaluation Board User Manual*, Document Number X23A-G-004-xx.
- Epson Research and Development, Inc., *S1D13505 Programming Notes and Examples*, Document Number X23A-G-003-xx.

7.2 Document Sources

- Toshiba America Electrical Components Website: http://www.toshiba.com/taec.
- Epson Electronics America Website: http://www.eea.epson.com.

8 Technical Support

8.1 EPSON LCD/CRT Controllers (S1D13505)

Japan
Seiko Epson Corporation
Electronic Devices Marketing Division
421-8, Hino, Hino-shi
Tokyo 191-8501, Japan
Tel: 042-587-5812
Fax: 042-587-5564
http://www.epson.co.jp

North America
Epson Electronics America, Inc.
150 River Oaks Parkway
San Jose, CA 95134, USA
Tel: (408) 922-0200
Fax: (408) 922-0238
http://www.eea.epson.com

Taiwan, R.O.C.
Epson Taiwan Technology
& Trading Ltd.
10F, No. 287
Nanking East Road
Sec. 3, Taipei, Taiwan, R.O.C.
Tel: 02-2717-7360
Fax: 02-2712-9164

Europe
Epson Europe Electronics GmbH
Riesstrasse 15
80992 Munich, Germany
Tel: 089-14005-0
Fax: 089-14005-110

Hong Kong
Epson Hong Kong Ltd.
20/F., Harbour Centre
25 Harbour Road
Wanchai, Hong Kong
Tel: 2585-4600
Fax: 2827-4346

Singapore
Epson Singapore Pte., Ltd.
No. 1
Temasek Avenue #36-00
Millenia Tower
Singapore, 039192
Tel: 337-7911
Fax: 334-2716

8.2 Toshiba MIPS TX3912 Processor

http://www.toshiba.com/taec/nonflash/indexproducts.html

8.3 ITE IT8368E

Integrated Technology Express, Inc.
Sales & Marketing Division
2710 Walsh Avenue
Santa Clara, CA 95051, USA
Tel: (408) 980-8168
Fax: (408) 980-9232
http://www.iteusa.com

EPSON®

ENERGY SAVING EPSON

S1D13505 Embedded RAMDAC LCD/CRT Controller

Interfacing to the NEC VR4121™ Microprocessor

Document Number: X23A-G-011-04

Copyright © 1998, 2001 Epson Research and Development, Inc. All Rights Reserved.

Information in this document is subject to change without notice. You may download and use this document, but only for your own use in evaluating Seiko Epson/EPSON products. You may not modify the document. Epson Research and Development, Inc. disclaims any representation that the contents of this document are accurate or current. The Programs/Technologies described in this document may contain material protected under U.S. and/or International Patent laws.

EPSON is a registered trademark of Seiko Epson Corporation. All other trademarks are the property of their respective owners.
Microsoft and Windows are registered trademarks of Microsoft Corporation.

THIS PAGE LEFT BLANK

Table of Contents

1 Introduction 7
2 Interfacing to the NEC VR4121 8
2.1 The NEC VR4121 System Bus 8
2.1.1 Overview 8
2.1.2 LCD Memory Access Cycles 9
3 S1D13505 Host Bus Interface 10
3.1 Host Bus Interface Pin Mapping 10
3.2 Host Bus Interface Signal Descriptions 11
4 VR4121 to S1D13505 Interface 12
4.1 Hardware Description 12
4.2 S1D13505 Configuration 13
4.3 NEC VR4121 Configuration 13
4.4 Memory Mapping and Aliasing 14
5 Software 15
6 References 16
6.1 Documents 16
6.2 Document Sources 16
7 Technical Support 17
7.1 Epson LCD/CRT Controllers (S1D13505) 17
7.2 NEC Electronics Inc. (VR4121). 17

THIS PAGE LEFT BLANK

List of Tables

Table 3-1: Host Bus Interface Pin Mapping 10
Table 4-1: Summary of Power-On-Reset Options 13

List of Figures

Figure 2-1: NEC VR4121 Read/Write Cycles 9
Figure 4-1: NEC VR4121 to S1D13505 Configuration Schematic 12

THIS PAGE LEFT BLANK

1 Introduction

This application note describes the hardware and software environment necessary to provide an interface between the S1D13505 Embedded RAMDAC LCD/CRT Controller and the NEC VR4121™ (µPD30121) microprocessor.

The designs described in this document are presented only as examples of how such interfaces might be implemented. This application note will be updated as appropriate. Please check the Epson Electronics America website at http://www.eea.epson.com for the latest revision of this document before beginning any development.

We appreciate your comments on our documentation. Please contact us via email at techpubs@erd.epson.com.

2 Interfacing to the NEC VR4121

2.1 The NEC VR4121 System Bus

The VR-Series family of microprocessors features a high-speed synchronous system bus typical of modern microprocessors. Designed with external LCD controller support and Windows CE based embedded consumer applications in mind, the VR4121 offers a highly integrated solution for portable systems. This section provides an overview of the operation of the CPU bus in order to establish interface requirements.

2.1.1 Overview

The NEC VR4121 is designed around the RISC architecture developed by MIPS. This microprocessor is based on the 166MHz VR4120 CPU core which supports 64-bit processing. The CPU communicates with the Bus Control Unit (BCU) using its internal SysAD bus. The BCU in turn communicates with external devices using its ADD and DATA buses which can be dynamically sized to 16 or 32-bit operation.

The NEC VR4121 has direct support for an external LCD controller. Specific control signals are assigned for an external LCD controller providing an easy interface to the CPU. A 16M byte block of memory is assigned for the LCD controller and its own chip select and ready signals are available. Word or byte accesses are controlled by the system high byte signal (SHB#).

2.1.2 LCD Memory Access Cycles

Once an address in the LCD block of memory is placed on the external address bus (ADD[25:0]), the LCD chip select (LCDCS#) is driven low. The read or write enable signals (RD# or WR#) are driven low for the appropriate cycle and LCDRDY is driven low to insert wait states into the cycle. The high byte enable (SHB#) in conjunction with address bit 0 allows for byte steering.

The following figure illustrates typical NEC VR4121 memory read and write cycles to the LCD controller interface.

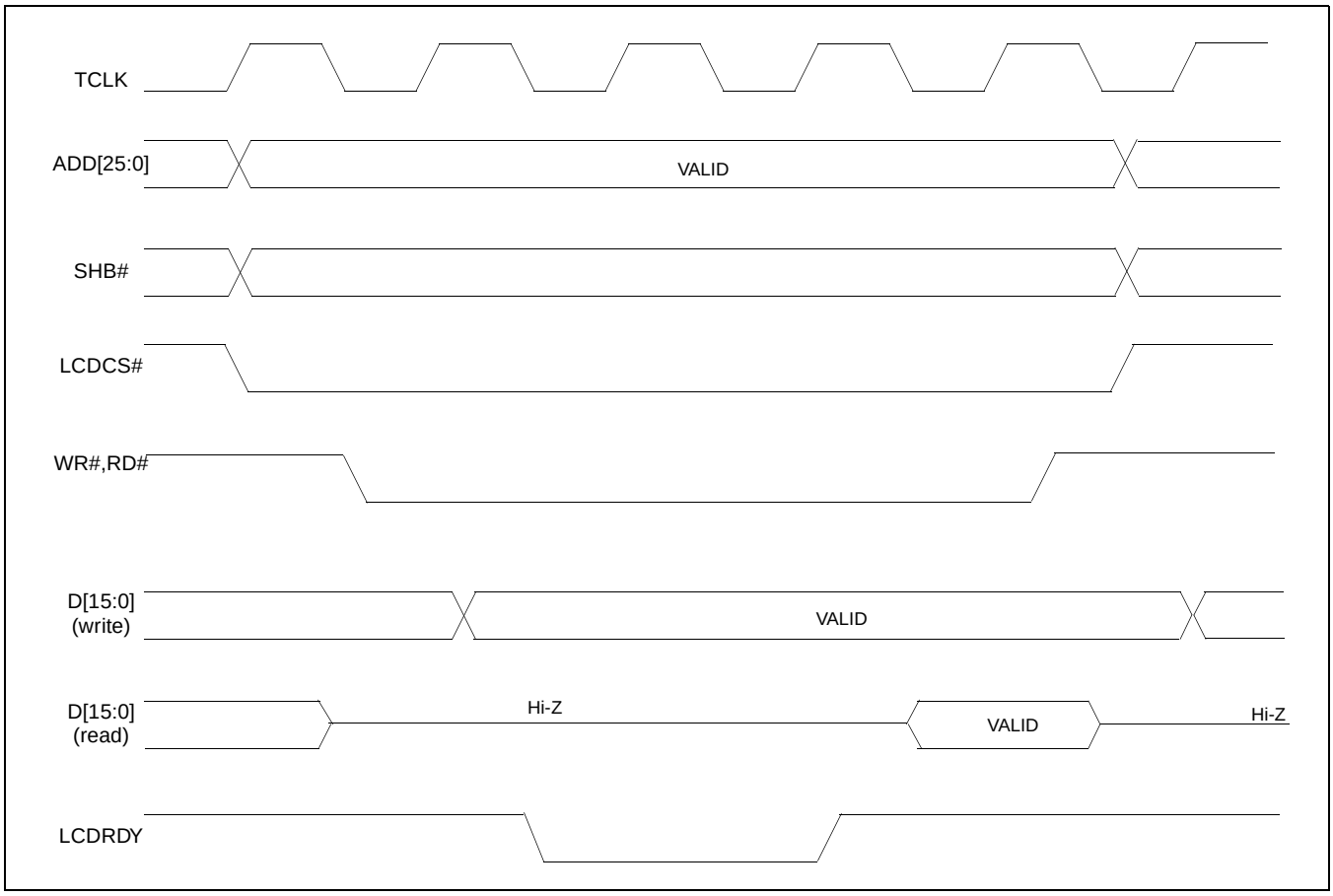

Figure 2-1: NEC VR4121 Read/Write Cycles

3 S1D13505 Host Bus Interface

The S1D13505 directly supports multiple processors. The S1D13505 implements a 16-bit MIPS/ISA Host Bus Interface which is most suitable for direct connection to the VR4121 microprocessor.

The MIPS/ISA host bus interface is selected by the S1D13505 on the rising edge of RESET#. After releasing reset the bus interface signals assume their selected configuration. For details on S1D13505 configuration, see Section 4.2, “S1D13505 Configuration” on page 13.

Note

At reset, the Host Interface Disable bit in the Miscellaneous Disable Register (REG[1Bh] bit 7) is set to 1. This means that only REG[1Ah] (read-only) and REG[1Bh] are accessible **until a write to REG[1Bh] sets bit 7 to 0 making all registers accessible**. When debugging a new hardware design, this can sometimes give the appearance that the interface is not working, so it is important to remember to clear this bit before proceeding with debugging.

3.1 Host Bus Interface Pin Mapping

The following table shows the functions of each host bus interface signal.

Table 3-1: Host Bus Interface Pin Mapping

S1D13505 Pin Name	NEC VR4121 Pin Name
AB20	ADD20
AB[19:0]	ADD[19:0]
DB[15:0]	DAT[15:0]
WE1#	SHB#
M/R#	ADD21
CS#	LCDCS#
BUSCLK	BUSCLK
BS#	Connected to V_{DD}
RD/WR#	Connected to V_{DD}
RD#	RD#
WE0#	WR#
WAIT#	LCDRDY
RESET#	connected to system reset

3.2 Host Bus Interface Signal Descriptions

The S1D13505 MIPS/ISA Host Bus Interface requires the following signals.

- BUSCLK is a clock input which is required by the S1D13505 Host Bus Interface. It is separate from the input clock (CLKI) and is typically driven by the host CPU system clock.
- The address inputs AB[20:0], and the data bus DB[15:0], connect directly to the VR4121 address (ADD[20:0]) and data bus (DAT[15:0]), respectively. MD4 must be set to select the proper endian mode upon reset.
- M/R# (memory/register) selects between memory or register access. It may be connected to an address line, allowing system address ADD21 to be connected to the M/R# line.
- Chip Select (CS#) must be driven low by LCDCS# whenever the S1D13505 is accessed by the VR4121.
- WE1# connects to SHB# (the high byte enable signal from the VR4121) which in conjunction with address bit 0 allows byte steering of read and write operations.
- WE0# connects to WR# (the write enable signal from the VR4121) and must be driven low when the VR4121 bus is writing data to the S1D13505.
- RD# connects to RD# (the read enable signal from the VR4121) and must be driven low when the VR4121 bus is reading data from the S1D13505.
- WAIT# connects to LCDRDY and is a signal output from the S1D13505 that indicates the VR4121 bus must wait until data is ready (read cycle) or accepted (write cycle) on the host bus. Since VR4121 bus accesses to the S1D13505 may occur asynchronously to the display update, it is possible that contention may occur in accessing the S1D13505 internal registers and/or display buffer. The WAIT# line resolves these contentions by forcing the host to wait until the resource arbitration is complete.
- The BS# and RD/WR# signals are not used for the MIPS/ISA Host Bus Interface and should be tied high (connected to V_{DD}).

4 VR4121 to S1D13505 Interface

4.1 Hardware Description

The NEC VR4121 microprocessor is specifically designed to support an external LCD controller. It provides all the necessary internal address decoding and control signals required by the S1D13505.

The diagram below shows a typical implementation utilizing the S1D13505.

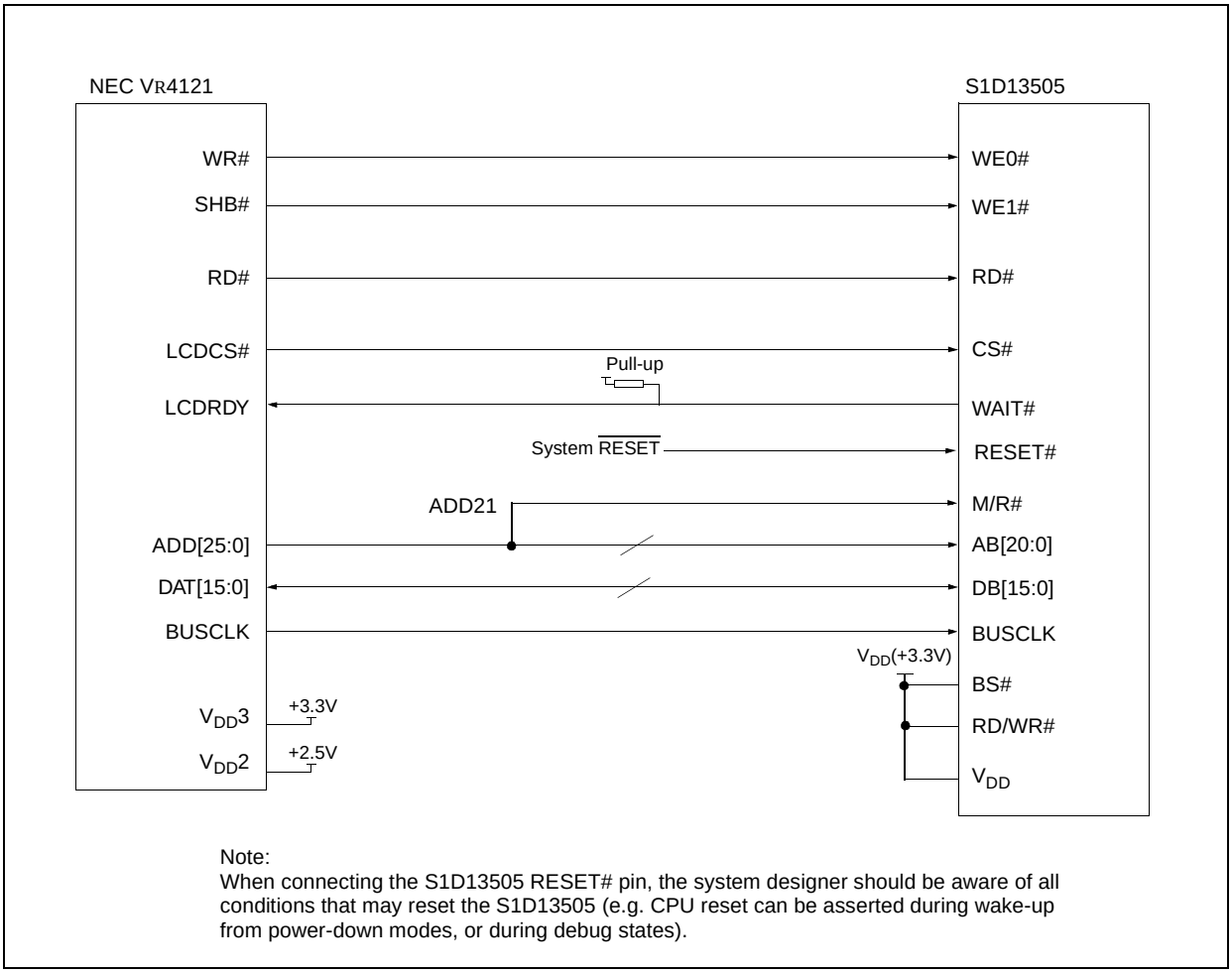

Figure 4-1: NEC VR4121 to S1D13505 Configuration Schematic

Note

For pin mapping see Table 3-1:, “Host Bus Interface Pin Mapping,” on page 10.

4.2 S1D13505 Configuration

The S1D13505 latches MD15 through MD0 to allow selection of the bus mode and other configuration data on the rising edge of RESET#. For details on configuration, refer to the *S1D13505 Hardware Functional Specification*, document number X23A-A-001-xx.

The table below shows those configuration settings relevant to the MIPS/ISA host bus interface used by the NEC VR4121 microprocessor.

Table 4-1: Summary of Power-On-Reset Options

S1D13505 Pin Name	**value on this pin at rising edge of RESET# is used to configure:**(1/0)	
	1	**0**
MD0	8-bit host bus interface	16-bit host bus interface
MD[3:1]	101 = MIPS/ISA host bus interface	
MD4	Little Endian	Big Endian
MD5	WAIT# is active high (1 = insert wait state)	WAIT# is active low (0 = insert wait state)
MD11	Alternate Host Bus Interface Selected	Primary Host Bus Interface Selected

= configuration for NEC VR4121 microprocessor

4.3 NEC VR4121 Configuration

The NEC VR4121 register BCUCNTREG1 bit ISAM/LCD must be set to 0. A 0 indicates that the reserved address space is for the LCD controller, and not for the high-speed ISA memory. The register BCUCNTREG2 bit GMODE must be set to 1 to indicate that a non-inverting data bus is used for LCD controller accesses.

The LCD interface must be set to operate using a 16-bit data bus. This is accomplished by setting the NEC VR4121 register BCUCNTREG3 bit LCD32/ISA32 to 0.

Note

Setting the register BCUCNTREG3 bit LCD32/ISA32 to 0 affects both the LCD controller and high-speed ISA memory access.

The frequency of BUSCLK output is programmed from the state of pins TxD/CLKSEL2, RTS#/CLKSEL1 and DTR#/CLKSEL0 during reset, and from the PMU (Power Management Unit) configuration registers of the NEC VR4121. The S1D13505 works at any of the frequencies provided by the NEC VR4121.

4.4 Memory Mapping and Aliasing

The NEC VR4121 provides the internal address decoding required by an external LCD controller. The physical address range from 0A00 0000h to 0AFF FFFFh (16M bytes) is reserved for use by an external LCD controller (e.g. S1D13505).

The S1D13505 supports up to 2M bytes of display buffer. The NEC VR4121 address line ADD21 (connected to M/R#) is used to select between the S1D13505 display buffer (ADD21=1) and the S1D13505 internal registers (ADD21=0). NEC VR4121 address lines ADD[23:22] are ignored, thus the S1D13505 is aliased four times at 4M byte intervals over the LCD controller address range. Address lines ADD[25:24] are set at 10b and never change while the LCD controller is being addressed.

5 Software

Test utilities and Windows® CE v2.0 display drivers are available for the S1D13505. Full source code is available for both the test utilities and the drivers.

The test utilities are configurable for different panel types using a program called 13505CFG, or by directly modifying the source. The Windows CE v2.0 display drivers can be customized by the OEM for different panel types, resolutions and color depths only by modifying the source.

The S1D13505 test utilities and Windows CE v2.0 display drivers are available from your sales support contact or on the internet at http://www.eea.epson.com.

6 References

6.1 Documents

- NEC Electronics Inc., *VR4121 Preliminary Users Manual*, Document Number U13569EJ1V0UM00.
- Epson Research and Development, Inc., *S1D13505 Hardware Functional Specification*, Document Number X23A-A-001-xx.
- Epson Research and Development, Inc., *S5U13505B00C Rev. 1.0 ISA Bus Evaluation Board User Manual*, Document Number X23A-G-004-xx.
- Epson Research and Development, Inc., *S1D13505 Programming Notes and Examples*, Document Number X23A-G-003-xx.

6.2 Document Sources

- NEC Electronics Website: http://www.necel.com.
- Epson Electronics America Website: http://www.eea.epson.com.

7 Technical Support

7.1 Epson LCD/CRT Controllers (S1D13505)

Japan
Seiko Epson Corporation
Electronic Devices Marketing Division
421-8, Hino, Hino-shi
Tokyo 191-8501, Japan
Tel: 042-587-5812
Fax: 042-587-5564
http://www.epson.co.jp

Hong Kong
Epson Hong Kong Ltd.
20/F., Harbour Centre
25 Harbour Road
Wanchai, Hong Kong
Tel: 2585-4600
Fax: 2827-4346

North America
Epson Electronics America, Inc.
150 River Oaks Parkway
San Jose, CA 95134, USA
Tel: (408) 922-0200
Fax: (408) 922-0238
http://www.eea.epson.com

Europe
Epson Europe Electronics GmbH
Riesstrasse 15
80992 Munich, Germany
Tel: 089-14005-0
Fax: 089-14005-110

Taiwan, R.O.C.
Epson Taiwan Technology
& Trading Ltd.
10F, No. 287
Nanking East Road
Sec. 3, Taipei, Taiwan, R.O.C.
Tel: 02-2717-7360
Fax: 02-2712-9164

Singapore
Epson Singapore Pte., Ltd.
No. 1
Temasek Avenue #36-00
Millenia Tower
Singapore, 039192
Tel: 337-7911
Fax: 334-2716

7.2 NEC Electronics Inc. (VR4121).

NEC Electronics Inc. (U.S.A.)
Corporate Headquarters
2880 Scott Blvd.
Santa Clara, CA 95050-8062, USA
Tel: (800) 366-9782
Fax: (800) 729-9288
http://www.nec.com
http://www.vrseries.com

THIS PAGE LEFT BLANK

S1D13505 Embedded RAMDAC LCD/CRT Controller

Interfacing to the NEC V832™ Microprocessor

Document Number: X23A-G-012-02

Copyright © 2001 Epson Research and Development, Inc. All Rights Reserved.

Information in this document is subject to change without notice. You may download and use this document, but only for your own use in evaluating Seiko Epson/EPSON products. You may not modify the document. Epson Research and Development, Inc. disclaims any representation that the contents of this document are accurate or current. The Programs/Technologies described in this document may contain material protected under U.S. and/or International Patent laws.

EPSON is a registered trademark of Seiko Epson Corporation. All other trademarks are the property of their respective owners.
Microsoft and Windows are registered trademarks of Microsoft Corporation.

THIS PAGE LEFT BLANK

Table of Contents

1 Introduction 7
2 Interfacing to the NEC V832 8
2.1 The NEC V832 System Bus 8
2.1.1 Overview 8
2.1.2 Access Cycles 9
3 S1D13505 Host Bus Interface 10
3.1 Host Bus Interface Pin Mapping 10
3.2 Host Bus Interface Signal Descriptions 11
4 V832 to S1D13505 Interface 12
4.1 Hardware Description 12
4.2 S1D13505 Hardware Configuration 13
4.3 NEC V832 Configuration 14
4.4 Memory Mapping and Aliasing 15
5 Software 16
6 References 17
6.1 Documents 17
6.2 Document Sources 17
7 Technical Support 18
7.1 Epson LCD/CRT Controllers (S1D13505) 18
7.2 NEC Electronics Inc. (V832). 18

THIS PAGE LEFT BLANK

List of Tables

Table 3-1: Host Bus Interface Pin Mapping 10
Table 4-1: Summary of Power-On/Reset Options 13
Table 4-2: NEC V832 Wait States vs. Bus Clock Frequency 14
Table 4-3: NEC V832 IO Address Range For Each CSn Line 15

List of Figures

Figure 2-1: NEC V832 Read/Write Cycles 9
Figure 4-1: NEC V832 to S1D13505 Configuration Schematic 12

THIS PAGE LEFT BLANK

1 Introduction

This application note describes the hardware and software environment required to provide an interface between the S1D13505 Embedded RAMDAC LCD/CRT Controller and the NEC V832™ microprocessor (µPD705102).

The designs described in this document are presented only as examples of how such interfaces might be implemented. This application note will be updated as appropriate. Please check the Epson Electronics America Website at http://www.eea.epson.com for the latest revision of this document before beginning any development.

We appreciate your comments on our documentation. Please contact us via email at techpubs@erd.epson.com.

2 Interfacing to the NEC V832

2.1 The NEC V832 System Bus

This section provides an overview of the operation of the CPU bus in order to establish interface requirements.

2.1.1 Overview

The NEC V832 is designed around the RISC architecture developed by MIPS. This microprocessor is based on the 32-bit V830 CPU core. The CPU communicates with external devices via the Bus Control Unit (BCU). The BCU in turn communicates using its ADD and DATA buses which can be dynamically sized to 16 or 32-bit operation.

The NEC V832 features dedicated chip select pins which allow memory-mapped IO operations. A 16M byte block of addressing space can be assigned for the LCD controller and its own chip select and ready signals are available. Word or byte accesses are controlled by system byte enable signals ($\overline{\text{LLBEN}}$ and $\overline{\text{LUBEN}}$).

2.1.2 Access Cycles

Once an address in the appropriate range is placed on the external address bus (A[23:1]), the corresponding chip select ($\overline{CSn}$) is driven low. The read or write enable signals ($\overline{IORD}$ or $\overline{IOWR}$) are driven low and $\overline{READY}$ is driven low by the S1D13505 to insert wait states into the cycle. The byte enable signals ($\overline{LLBEN}$ and $\overline{LUBEN}$) allow byte steering.

The following figure illustrates typical NEC V832 memory-mapped IO access cycles.

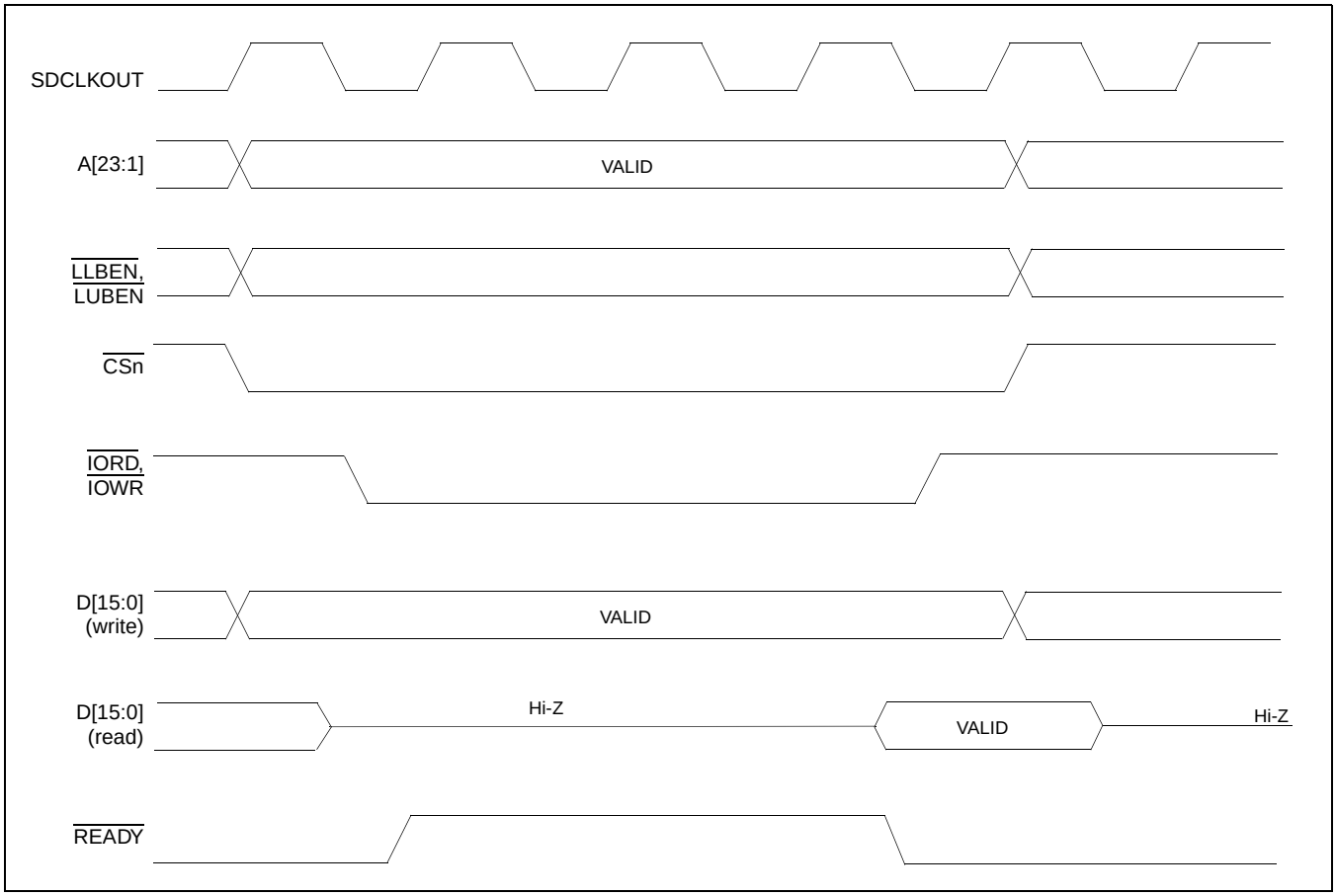

Figure 2-1: NEC V832 Read/Write Cycles

3 S1D13505 Host Bus Interface

The S1D13505 directly supports multiple processors. The S1D13505 implements a 16-bit PC Card (PCMCIA) Host Bus Interface which is most suitable for direct connection to the V832 microprocessor.

The PC Card host bus interface is selected by the S1D13505 on the rising edge of RESET#. After releasing reset the bus interface signals assume their selected configuration. For details on S1D13505 configuration, see Section 4.2, “S1D13505 Hardware Configuration” on page 13.

Note

At reset, the Host Interface Disable bit in the Miscellaneous Disable Register (REG[1Bh] bit 7) is set to 1. This means that only REG[1Ah] (read-only) and REG[1Bh] are accessible **until a write to REG[1Bh] sets bit 7 to 0 making all registers accessible**. When debugging a new hardware design, this can sometimes give the appearance that the interface is not working, so it is important to remember to clear this bit before proceeding with debugging.

3.1 Host Bus Interface Pin Mapping

The following table shows the functions of each host bus interface signal.

Table 3-1: Host Bus Interface Pin Mapping

S1D13505 Pin Name	NEC V832 Pin Name
AB[20:1]	A[20:1]
A0	GND[1]
DB[15:0]	D[15:0]
WE1#	$\overline{\text{LUBEN}}$
M/R#	A21
CS#	$\overline{\text{CS3}}$, $\overline{\text{CS4}}$, $\overline{\text{CS5}}$ or $\overline{\text{CS6}}$
BUSCLK	SDCLKOUT
BS#	Connected to VDD (+3.3V)
RD/WR#	$\overline{\text{LLBEN}}$
RD#	$\overline{\text{IORD}}$
WE0#	$\overline{\text{IOWR}}$
WAIT#	$\overline{\text{READY}}$
RESET#	connected to system reset

Note

[1] The bus signal A0 is not used by the S1D13505 internally.

3.2 Host Bus Interface Signal Descriptions

The S1D13505 PC Card Host Bus Interface requires the following signals.

- BUSCLK is a clock input which is required by the S1D13505 Host Bus Interface. It is driven by the V832 signal SDCLKOUT.
- The address inputs AB[20:0], and the data bus DB[15:0], connect directly to the V832 address (A[20:0]) and data bus (D[15:0]), respectively. MD4 must be set to select little endian mode upon reset.
- M/R# (memory/register) selects between memory or register access. It may be connected to an address line, allowing system address A21 to be connected to the M/R# line.
- Chip Select (CS#) must be driven low by $\overline{\text{CSx}}$ (where x is the V832 chip select used) whenever the S1D13505 is accessed by the V832.
- WE1# and RD/WR# connect to $\overline{\text{LUBEN}}$ and $\overline{\text{LLBEN}}$ (the byte enables for the high-order and low-order bytes). They are driven low when the V832 is accessing the S1D13505.
- RD# connects to $\overline{\text{IORD}}$ (the read enable signal from the V832).
- WE0# connects to $\overline{\text{IOWR}}$ (the write enable signal from the V832).
- WAIT# is a signal output from the S1D13505 that indicates the V832 must wait until data is ready (read cycle) or accepted (write cycle) on the host bus. Since V832 accesses to the S1D13505 may occur asynchronously to the display update, it is possible that contention may occur in accessing the S1D13505 internal registers and/or display buffer. The WAIT# line resolves these contentions by forcing the host to wait until the resource arbitration is complete. For V832 applications, this signal should be set active low using the MD5 configuration input.
- The Bus Start (BS#) signal is not used for the PC Card Host Bus Interface and should be tied high (connected to V_{DD}).
- The RESET# (active low) input of the S1D13505 may be connected to the system RESET.

4 V832 to S1D13505 Interface

4.1 Hardware Description

The NEC V832 microprocessor features configurable chip select lines which can easily be used for an external LCD controller. It provides all the necessary internal address decoding and control signals required by the S1D13505.

The diagram below shows a typical implementation utilizing the S1D13505.

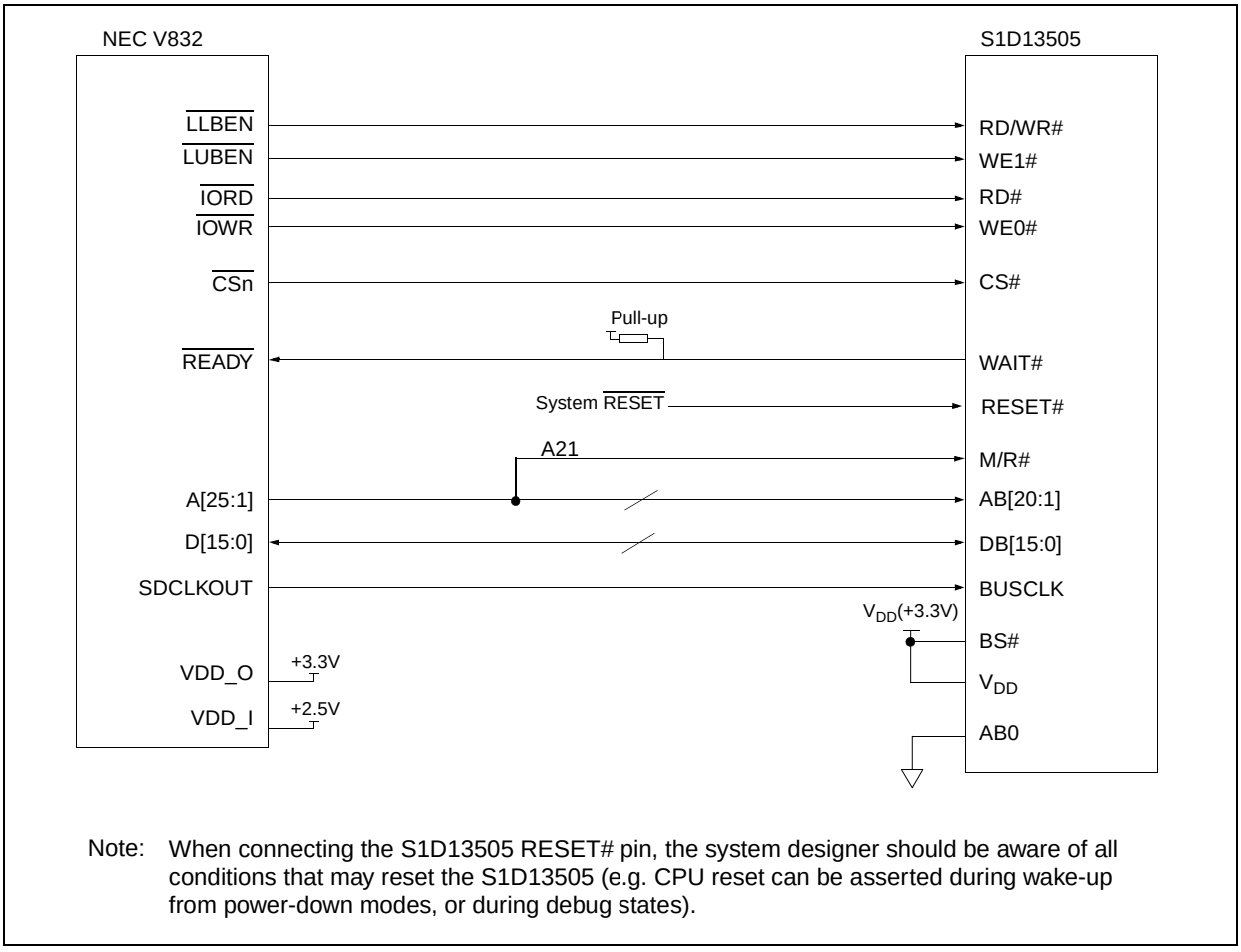

Figure 4-1: NEC V832 to S1D13505 Configuration Schematic

Note

For pin mapping see Table 3-1:, “Host Bus Interface Pin Mapping,” on page 10.

4.2 S1D13505 Hardware Configuration

The S1D13505 latches MD15 through MD0 to allow selection of the bus mode and other configuration data on the rising edge of RESET#. For details on configuration, refer to the S1D13505 Hardware Functional Specification, document number X23A-A-001-xx.

The table below shows those configuration settings relevant to the PC Card host bus interface used by the NEC V832 microprocessor.

Table 4-1: Summary of Power-On/Reset Options

S1D13505 Pin Name	Value on this pin at rising edge of RESET# is used to configure: (1/0)	
	1	**0**
MD0	8-bit host bus interface	16-bit host bus interface
MD[3:1]	111 = PC Card host bus interface	
MD4	Little Endian	Big Endian
MD5	WAIT# is active high (1 = insert wait state)	WAIT# is active low (0 = insert wait state)
MD11	Alternate Host Bus Interface Selected	Primary Host Bus Interface Selected
MD12	BUSCLK input divided by two	BUSCLK input not divided by two

= configuration for NEC V832 microprocessor

4.3 NEC V832 Configuration

The NEC V832 should access the S1D13505 in non-burst mode only. This is ensured by using any one of the $\overline{CS3}$ to $\overline{CS6}$ lines to control the S1D13505 and setting that line to respond to IO operations using the NEC V832 BCTC register. For example, if line $\overline{CS5}$ is designated to control the S1D13505, then bit 5 (CT5) of the BCTC register should be set to 1 (IO cycle).

The NEC V832 data bus should be programmed to use 16 bits as the maximum width for S1D13505 bus transactions. This does not affect the width of other NEC V832 data bus transactions. Data bus width is set in the NEC V832 DBC register. For example, if line $\overline{CS4}$ is designated to control the S1D13505, then bit 4 (BW4) of the DBC register should be set to 1 (16-bit bus width).

Depending on bus clock frequencies, a different number of wait states may be required. These need to be programmed into the NEC V832 PWC0 and PWC1 registers in the bit field corresponding to the $\overline{CSn}$ line chosen for the S1D13505. For example, if $\overline{CS3}$ controls the S1D13505 and one wait state is required, then bits 14-12 of the NEC V832 PWC0 register (WS3) must be set to 001b (one wait state). If $\overline{CS6}$ controls the S1D13505 and no wait state is needed, then bits 11-8 of the NEC V832 PWC1 register (WS6) must be set to 0000b (zero wait state).

The table below shows the recommended wait states depending on the bus clock frequency.

Table 4-2: NEC V832 Wait States vs. Bus Clock Frequency

Wait States	Maximum Frequency (SDCLKOUT)
0	12.5MHz
1	37MHz
2	No limit

Note

The host interface of the S1D13505 is slower when disabled. Therefore, while the host interface is disabled (REG[1Bh] bit 7 = 1), an additional wait state is required to maintain the same respective frequency limits.

No idle state needs to be added. The NEC V832 PIC0 and PIC1 register bit field corresponding to the $\overline{CSn}$ line chosen for the S1D13505 must be set to zero. For example, if $\overline{CS3}$ controls the S1D13505, then bits 14-12 of the NEC V832 PIC0 register (IS3) must be set to 000b (no idle state).

4.4 Memory Mapping and Aliasing

The $\overline{CSn}$ line selected determines the address range to be reserved for the S1D13505. The table below summarizes the S1D13505 address mapping.

Table 4-3: NEC V832 IO Address Range For Each $\overline{CSn}$ Line

$\overline{CSn}$ Line	NEC V832 IO Address		S1D13505 Function
$\overline{CS3}$	0300 0000h to 03FF FFFFh	0300 0000h	Registers
		0320 0000h	Display buffer (2M bytes)
$\overline{CS4}$	0400 0000h to 04FF FFFFh	0400 0000h	Registers
		0420 0000h	Display buffer (2M bytes)
$\overline{CS5}$	0500 0000h to 05FF FFFFh	0500 0000h	Registers
		0520 0000h	Display buffer (2M bytes)
$\overline{CS6}$	0600 0000h to 06FF FFFFh	0600 0000h	Registers
		0620 0000h	Display buffer (2M bytes)

Each address range is 16M bytes, therefore, the S1D13505 is aliased four times over the address range.

5 Software

Test utilities and Windows® CE v2.0 display drivers are available for the S1D13505. Full source code is available for both the test utilities and the drivers.

The test utilities are configurable for different panel types using a program called 13505CFG, or by directly modifying the source. The Windows CE v2.0 display drivers can be customized by the OEM for different panel types, resolutions and color depths only by modifying the source.

The S1D13505 test utilities and Windows CE v2.0 display drivers are available from your sales support contact or www.eea.epson.com.

6 References

6.1 Documents

- NEC Electronics Inc., *V832 Preliminary Users Manual*, Document Number U13577EJ1V0UM00.
- Epson Research and Development, Inc., *S1D13505 Hardware Functional Specification*, Document Number X23A-A-001-xx.
- Epson Research and Development, Inc., *S5U13505B00C Rev. 1.0 ISA Bus Evaluation Board User Manual*, Document Number X23A-G-004-xx.
- Epson Research and Development, Inc., *S1D13505 Programming Notes and Examples*, Document Number X23A-G-003-xx.

6.2 Document Sources

- NEC Electronics Website: http://www.necel.com.
- Epson Electronics America Website: http://www.eea.epson.com.

7 Technical Support

7.1 Epson LCD/CRT Controllers (S1D13505)

Japan
Seiko Epson Corporation
Electronic Devices Marketing Division
421-8, Hino, Hino-shi
Tokyo 191-8501, Japan
Tel: 042-587-5812
Fax: 042-587-5564
http://www.epson.co.jp

Hong Kong
Epson Hong Kong Ltd.
20/F., Harbour Centre
25 Harbour Road
Wanchai, Hong Kong
Tel: 2585-4600
Fax: 2827-4346

North America
Epson Electronics America, Inc.
150 River Oaks Parkway
San Jose, CA 95134, USA
Tel: (408) 922-0200
Fax: (408) 922-0238
http://www.eea.epson.com

Europe
Epson Europe Electronics GmbH
Riesstrasse 15
80992 Munich, Germany
Tel: 089-14005-0
Fax: 089-14005-110

Taiwan, R.O.C.
Epson Taiwan Technology
& Trading Ltd.
10F, No. 287
Nanking East Road
Sec. 3, Taipei, Taiwan, R.O.C.
Tel: 02-2717-7360
Fax: 02-2712-9164

Singapore
Epson Singapore Pte., Ltd.
No. 1
Temasek Avenue #36-00
Millenia Tower
Singapore, 039192
Tel: 337-7911
Fax: 334-2716

7.2 NEC Electronics Inc. (V832).

NEC Electronics Inc. (U.S.A.)
Corporate Headquarters
2880 Scott Blvd.
Santa Clara, CA 95050-8062, USA
Tel: (800) 366-9782
Fax: (800) 729-9288
http://www.necel.com

Компания «ЭлектроПласт» предлагает заключение долгосрочных отношений при поставках импортных электронных компонентов на взаимовыгодных условиях!

Наши преимущества:

- Оперативные поставки широкого спектра электронных компонентов отечественного и импортного производства напрямую от производителей и с крупнейших мировых складов;
- Поставка более 17-ти миллионов наименований электронных компонентов;
- Поставка сложных, дефицитных, либо снятых с производства позиций;
- Оперативные сроки поставки под заказ (от 5 рабочих дней);
- Экспресс доставка в любую точку России;
- Техническая поддержка проекта, помощь в подборе аналогов, поставка прототипов;
- Система менеджмента качества сертифицирована по Международному стандарту ISO 9001;
- Лицензия ФСБ на осуществление работ с использованием сведений, составляющих государственную тайну;
- Поставка специализированных компонентов (Xilinx, Altera, Analog Devices, Intersil, Interpoint, Microsemi, Aeroflex, Peregrine, Syfer, Eurofarad, Texas Instrument, Miteq, Cobham, E2V, MA-COM, Hittite, Mini-Circuits,General Dynamics и др.);

Помимо этого, одним из направлений компании «ЭлектроПласт» является направление «Источники питания». Мы предлагаем Вам помощь Конструкторского отдела:

- Подбор оптимального решения, техническое обоснование при выборе компонента;
- Подбор аналогов;
- Консультации по применению компонента;
- Поставка образцов и прототипов;
- Техническая поддержка проекта;
- Защита от снятия компонента с производства.

Как с нами связаться

Телефон: 8 (812) 309 58 32 (многоканальный)
Факс: 8 (812) 320-02-42
Электронная почта: org@eplast1.ru
Адрес: 198099, г. Санкт-Петербург, ул. Калинина, дом 2, корпус 4, литера А.