Single-Chip, DSP-Based High Performance Motor Controller

ADMC401

FEATURES

- **26 MIPS Fixed-Point DSP Core**
  - Single Cycle Instruction Execution (38.5 ns)
  - ADSP-21xx Family Code Compatible
  - 16-Bit Arithmetic and Logic Unit (ALU)
  - Single Cycle 16-Bit × 16-Bit Multiply and Accumulate Into 40-Bit Accumulator (MAC)
  - 32-Bit Shifter (Logical and Arithmetic)
  - Multifunction Instructions
  - Single Cycle Context Switch
  - Zero Overhead Looping
  - Conditional Instruction Execution
  - Two Independent Data Address Generators
- **Memory Configuration**
  - 2K × 24-Bit Internal Program Memory RAM
  - 2K × 24-Bit Internal Program Memory ROM
  - 1K × 16-Bit Internal Data Memory RAM
  - 14-Bit Address Bus and 24-Bit Data Bus for External Memory Expansion
- **High Resolution Multichannel ADC**
  - 12-Bit Pipeline Flash Analog-to-Digital Converter
  - Eight Dedicated Analog Inputs
  - Simultaneous Sampling Capability
  - All Eight Inputs Converted in <2 μs
  - 4.0 V p-p Input Voltage Range
  - PWM Synchronized or External Convert Start
  - Internal or External Voltage Reference
  - Out-of-Range Detection
- **Voltage Reference**
  - Internal 2.0 V ± 2.0% Voltage Reference
- **Three-Phase 16-Bit PWM Generation Unit**
  - Programmable Switching Frequency, Dead Time and Minimum Pulsewidth
  - Edge Resolution of 38.5 ns
  - One or Two Updates per Switching Period
  - Hardware Polarity Control
  - Individual Enable/Disable of Each Output
  - High Frequency Chopping Mode
  - Dedicated Shutdown Pin ($\overline{\text{PWMTRIP}}$)
  - Additional Shutdown Pins in I/O System
  - High Output Sink and Source Capability (10 mA)
- **Incremental Encoder Interface Unit**
  - Quadrature Rates to 17.3 MHz
  - Programmable Filtering of Encoder Inputs
  - Alternative Frequency and Direction Mode
  - Two Registration Inputs to Latch Count Value
  - Optional Hardware Reset of Counter
  - Single North Marker Mode
  - Count Error Monitor Function
  - Dedicated 16-Bit Loop Timer (Periodic Interrupts)
  - Companion Encoder Event (1/T) Timer

(Continued on Page 14)

FUNCTIONAL BLOCK DIAGRAM

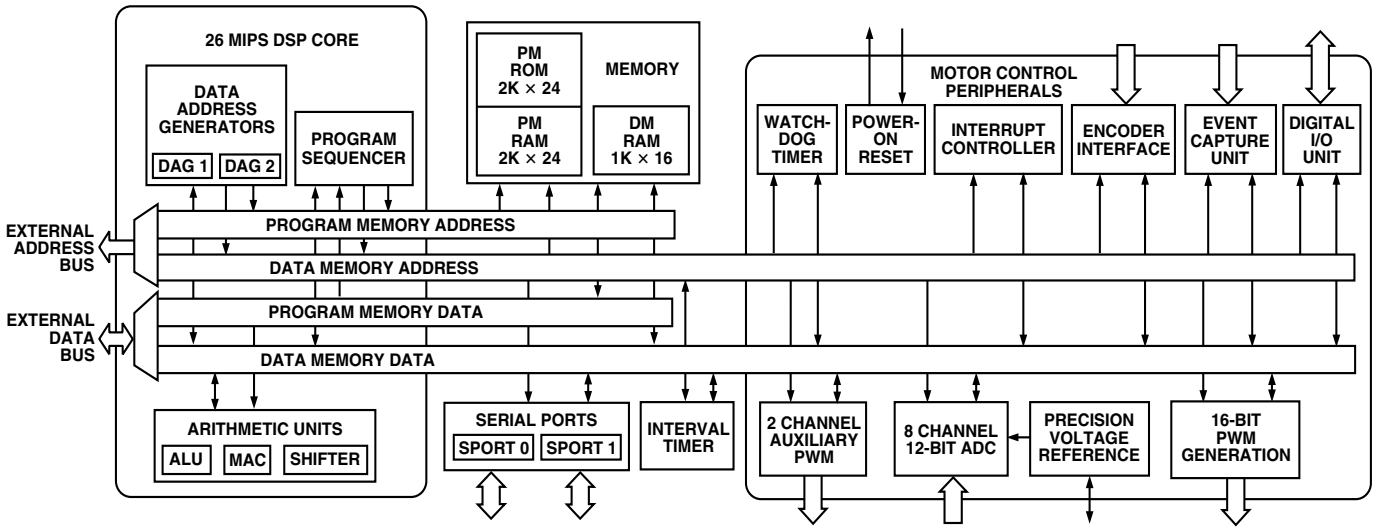

REV. B

Information furnished by Analog Devices is believed to be accurate and reliable. However, no responsibility is assumed by Analog Devices for its use, nor for any infringements of patents or other rights of third parties which may result from its use. No license is granted by implication or otherwise under any patent or patent rights of Analog Devices.

One Technology Way, P.O. Box 9106, Norwood, MA 02062-9106, U.S.A.
Tel: 781/329-4700 World Wide Web Site: http://www.analog.com
Fax: 781/326-8703
© Analog Devices, Inc., 2000

ADMC401–SPECIFICATIONS

RECOMMENDED OPERATING CONDITIONS (V_{DD} = AV_{DD} = 5 V ± 5%, GND = AGND = 0 V, T_{AMB} = –40°C to +85°C, CLKIN = 13 MHz, unless otherwise noted)

Parameter		B Grade Min	B Grade Max	Unit
V_{DD}	Digital Supply Voltage	4.75	5.25	V
AV_{DD}	Analog Supply Voltage	4.75	5.25	V
T_{AMB}	Ambient Operating Temperature	–40	+85	°C

ELECTRICAL CHARACTERISTICS

Parameter		Test Conditions	Min	Max	Unit
V_{IH}	HI-Level Input Voltage[1, 2, 3]	@ V_{DD} = max	2.0		V
V_{IL}	LO-Level Input Voltage[1, 2, 3]	@ V_{DD} = min		0.8	V
V_{OH}	HI-Level Output Voltage[1, 3, 4, 5, 6]	@ V_{DD} = min, I_{OH} = –1.0 mA	2.4		V
		@ V_{DD} = min, I_{OH} = –0.1 mA	V_{DD} – 0.3		V
V_{OL}	LO-Level Output Voltage[1, 3, 4, 5, 6]	@ V_{DD} = min, I_{OL} = 2.0 mA		0.4	V
V_{OH}	HI-Level Output Voltage[5]	@ V_{DD} = min, I_{OH} = –10.0 mA	2.4		V
V_{OL}	LO-Level Output Voltage[5]	@ V_{DD} = min, I_{OL} = 10.0 mA		1.2	V
I_{IH}	HI-Level Input Current[7]	@ V_{DD} = max, V_{IN} = V_{DD} max		10	µA
I_{IH}	HI-Level Input Current[8]	@ V_{DD} = max, V_{IN} = V_{DD} max		100	µA
I_{IH}	HI-Level Input Current[9]	@ V_{DD} = max, V_{IN} = V_{DD} max		10	µA
I_{IL}	LO-Level Input Current[7]	@ V_{DD} = max, V_{IN} = 0 V		10	µA
I_{IL}	LO-Level Input Current[8]	@ V_{DD} = max, V_{IN} = 0 V		10	µA
I_{IL}	LO-Level Input Current[9]	@ V_{DD} = max, V_{IN} = 0 V		100	µA
I_{OZH}	HI-Level Three-State Leakage Current[10]	@ V_{DD} = max, V_{IN} = V_{DD} max		10	µA
I_{OZL}	LO-Level Three-State Leakage Current[10]	@ V_{DD} = max, V_{IN} = 0 V		10	µA
I_{DD}	Digital Supply Current (Idle)[11]	@ V_{DD} = max		40	mA
I_{DD}	Digital Supply Current (Dynamic)[12]	@ V_{DD} = max		110	mA
I_{DD}	Analog Supply Current	@ AV_{DD} = max		60	mA
C_I	Input Pin Capacitance[13]	V_{IN} = 2.5 V, f_{IN} = 1 MHz, T_{AMB} = +25°C		8	pF
C_O	Output Pin Capacitance[13, 14]	V_{IN} = 2.5 V, f_{IN} = 1 MHz, T_{AMB} = +25°C		8	pF

NOTES

[1]Bidirectional pins: D0–D23, RFS0, RFS1, TFS0, TFS1, SCLK0 and SCLK1, PIO0–PIO11.

[2]Input only pins: $\overline{\text{PWMTRIP}}$, PWMPOL, $\overline{\text{PWMSR}}$, $\overline{\text{RESET}}$, EIA, EIB, EIZ, EIS, ETU0, ETU1, DR1A, DR1B, DR0, CLKIN, CONVST, MMAP, BMODE, $\overline{\text{BR}}$ and $\overline{\text{PWD}}$.

[3]Programmable I/O Pins (PIO0–PIO11).

[4]Output pins: PWMSYNC, AUX0, AUX1, CLKOUT, DT0, DT1, $\overline{\text{BG}}$, $\overline{\text{BGH}}$, $\overline{\text{PMS}}$, $\overline{\text{DMS}}$, $\overline{\text{BMS}}$, $\overline{\text{RD}}$, $\overline{\text{WR}}$, PWDACK and A0–A13.

[5]Output pins: AH, AL, BH, BL, CH and CL.

[6]Although specified for TTL outputs, all ADMC401 outputs are CMOS-compatible and will drive to V_{DD}–0.3 V and GND+0.3 V assuming no dc loads.

[7]Input only pins $\overline{\text{RESET}}$, EIA, EIB, EIZ, EIS, ETU0, ETU1, DR1A, DR1B, DR0, CLKIN, CONVST, MMAP, BMODE, $\overline{\text{BR}}$ and $\overline{\text{PWD}}$.

[8]Input pins with internal pull-down PIO0–PIO11 and $\overline{\text{PWMTRIP}}$.

[9]Input pins with internal pull-up, PWMPOL and $\overline{\text{PWMSR}}$.

[10]Three-statable pins: A0–A13, D0–D23, $\overline{\text{PMS}}$, $\overline{\text{DMS}}$, $\overline{\text{BMS}}$, $\overline{\text{RD}}$, $\overline{\text{WR}}$, DT0, DT1, RFS0, RFS1, TFS0, TFS1, SCLK0, SCLK1.

[11]Idle refers execution of the IDLE instruction. Deasserted pins are driven to V_{DD} or GND. Current reflects device operation with CLKOUT disabled.

[12]Current reflects device operating with no output loads.

[13]Guaranteed but not tested.

[14]Output Pin Capacitance is the capacitive load for any three-state output pin.

Specifications subject to change without notice.

ANALOG-TO-DIGITAL CONVERTER

(V_{DD} = AV_{DD} = 5 V ± 5%, GND = AGND = 0 V, T_{AMB} = –40°C to +85°C, CLKIN = 13 MHz, VIN0 to VIN7 = 4.0 V p-p, V_{REF} = 2.0 V, unless otherwise noted)

Parameter		Test Conditions	Min	Typ	Max	Unit
AC SPECIFICATIONS						
SNR	Signal to Noise Ratio	f_{IN} = 1.0 kHz	68	70		dB
SNRD	Signal to Noise and Distortion	f_{IN} = 1.0 kHz	66	69		dB
THD	Total Harmonic Distortion	f_{IN} = 1.0 kHz		–76	–70	dB
CTLK	Channel-Channel Crosstalk	f_{IN} = 1.0 kHz		–89	–72	dB
CMRR	Common-Mode Rejection Ratio			–90	–72	dB
PSRR	Power Supply Rejection Ratio			0.025	0.1	% FSR
ACCURACY						
INL	Integral Nonlinearity			±0.6	±1.5	LSB
DNL	Differential Nonlinearity			±0.5	±1.0	LSB
	No Missing Codes			12		Bits Guaranteed
	Zero Error			0.1	0.25	% FSR
	Gain Error[1]			0.4	1.0	% FSR
TEMPERATURE DRIFT						
	Zero Error			0.025		% FSR
	Gain Error[1]			0.025		% FSR
INPUT VOLTAGE						
V_{IN}	Voltage Span				4.0	V p-p
C_{IN}	Input Capacitance[2]			10		pF
CONVERSION TIME						
t_{CONV}	Total Conversion Time	All 8 Channels			1.88	µs

NOTES
[1]Excludes Internal Voltage Reference Error.
[2]Analog Input Pins VIN0 to VIN7.

Typical values are neither tested nor guaranteed.
Specifications subject to change without notice.

VOLTAGE REFERENCE

(V_{DD} = AV_{DD} = 5 V ± 5%, GND = AGND = 0 V, T_{AMB} = –40°C to +85°C, CLKIN = 13 MHz, VIN0 to VIN7 = 4.0 V p-p, V_{REF} = 2.0 V, unless otherwise noted)

Parameter		Test Conditions	Min	Typ	Max	Unit
V_{REF}	Output Voltage Reference	SENSE = REFCOM	1.96	2.0	2.04	V
	Output Voltage Tolerance[1]	SENSE = REFCOM		6		mV
	Output Current			1.0		mA
	Load Regulation	1.0 mA Load Current		0.3	1.5	mV
	Power Supply Rejection Ratio			0.1	1.5	mV
	Reference Input Resistance			8		kΩ

NOTES
[1]Relative tolerance due to temperature change, T_{MIN} to T_{MAX}.

Specifications subject to change without notice.

POWER-ON RESET

(GND = AGND = 0 V, T_{AMB} = –40°C to +85°C, CLKIN = 13 MHz, unless otherwise noted)

Parameter		Test Conditions	Min	Typ	Max	Unit
V_{RST}	Reset Threshold Voltage		3.25		4.0	V
V_{HYST}	Hysteresis Voltage			75		mV

Specifications subject to change without notice.

ABSOLUTE MAXIMUM RATINGS*

Supply Voltage . . . . . –0.3 V to +7 V
Input Voltage . . . . . –0.3 V to V_{DD} + 0.3 V
Output Voltage Swing . . . . . –0.3 V to V_{DD} + 0.3 V
Operating Temperature Range (Ambient) . . . . –40°C to +85°C
Storage Temperature Range . . . . . –65°C to +150°C
Lead Temperature (5 sec) . . . . . +280°C

*Stresses above those listed under absolute maximum ratings may cause permanent damage to the device. These are stresses only; functional operation of the device at these or any other conditions above those indicated in the operational section of this specification is not implied. Exposure to absolute maximum rating conditions for extended periods may affect device reliability.

ORDERING GUIDE

Model	Temperature Range	Instruction Rate	Package Description	Package Option
ADMC401BST	–40°C to +85°C	26 MHz	144-Lead Plastic Thin Quad Flatpack (LQFP)	ST-144
ADMC401-ADVEVALKIT			Development Tool Kit	
ADMC401-PB			Evaluation/Processor Board	

CAUTION

ESD (electrostatic discharge) sensitive device. Electrostatic charges as high as 4000 V readily accumulate on the human body and test equipment and can discharge without detection. Although the ADMC401 features proprietary ESD protection circuitry, permanent damage may occur on devices subjected to high-energy electrostatic discharges. Therefore, proper ESD precautions are recommended to avoid performance degradation or loss of functionality.

Timing Parameters

GENERAL NOTES

Use the exact timing information given. Do not attempt to derive parameters from the addition or subtraction of others. While addition or subtraction would yield meaningful results for an individual device, the values given in this data sheet reflect statistical variations and worst cases. Consequently, you cannot meaningfully add up parameters to derive longer times.

TIMING NOTES

Switching characteristics specify how the processor changes its signals. You have no control over this timing; it is dependent on the internal design. Timing requirements apply to signals that are controlled outside the processor, such as the data input for a read operation.

Timing requirements guarantee that the processor operates correctly with another device. Switching characteristics tell you what the device will do under a given circumstance. Also, use the switching characteristics to ensure any timing requirement of a device connected to the processor (such as memory) is satisfied.

MEMORY REQUIREMENTS

This chart links common memory device specification names and ADMC401 timing parameters for your convenience.

Parameter Name	Function	Common Memory Device Specification Name
t_{ASW}	A0–A13, $\overline{DMS}$, $\overline{PMS}$ Setup before $\overline{WR}$ Low	Address Setup to Write Start
t_{AW}	A0–A13, $\overline{DMS}$, $\overline{PMS}$ before $\overline{WR}$ Deasserted	Address Setup to Write End
t_{WRA}	A0–A13, $\overline{DMS}$, $\overline{PMS}$ Hold after $\overline{WR}$ Deasserted	Address Hold Time
t_{DW}	Data Setup before $\overline{WR}$ High	Data Setup Time
t_{DH}	Data Hold after $\overline{WR}$ High	Data Hold Time
t_{RDD}	$\overline{RD}$ Low to Data Valid	$\overline{OE}$ to Data Valid
t_{AA}	A0–A13, $\overline{DMS}$, $\overline{PMS}$, $\overline{BMS}$ to Data Valid	Address Access Time

Parameter		Min	Max	Unit
Clock Signals				
t_{CK} is defined as $0.5t_{CKI.}$ The ADMC401 uses an input clock with a frequency equal to half the instruction rate; a 13 MHz clock (which is equivalent to 76.9 ns) yields a 38.5 ns processor cycle (equivalent to 26 MHz). t_{CK} values within the range of $0.5t_{CKI}$ period should be substituted for all relevant timing parameters to obtain specification value. Example: $t_{CKH} = 0.5t_{CK} - 10$ ns = 0.5 (38.5 ns) – 10 ns = 9.25 ns.				
Timing Requirements:				
t_{CKI}	CLKIN Period	76.9	150	ns
t_{CKIL}	CLKIN Width Low	20		ns
t_{CKIH}	CLKIN Width High	20		ns
Switching Characteristics:				
t_{CKL}	CLKOUT Width Low	$0.5t_{CK} - 10$		ns
t_{CKH}	CLKOUT Width High	$0.5t_{CK} - 10$		ns
t_{CKOH}	CLKIN High to CLKOUT High	0	20	ns
Control Signals				
Timing Requirement:				
t_{RSP}	$\overline{\text{RESET}}$ Width Low	$5t_{CK}$[1]		ns
PWM Shutdown Signals				
Timing Requirements:				
t_{PWMTPW}	$\overline{\text{PWMTRIP}}$ Width Low	t_{CK}		ns
t_{PIOPWM}	PIO Width Low	$2t_{CK}$		ns
ADC Signals				
Timing Requirements:				
t_{CSI}	Internal Convert Start Width High	$2t_{CK}$		ns
t_{CSE}	External Convert Start Width High	$2t_{CK}$		ns

NOTE
[1]Applies after power-up sequence is complete. Internal phase lock loop requires no more than 2000 CLKIN cycles assuming stable CLKIN (not including crystal oscillator start-up time).

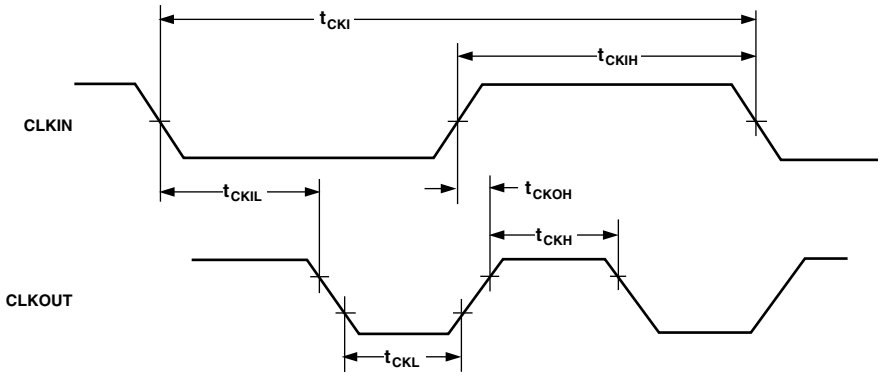

Figure 1. Clock Signals

Parameter		Min	Max	Unit
Interrupts and Flags				
Timing Requirements:				
t_{IFS}	$\overline{IRQx}$ or FI Setup before CLKOUT Low[1, 2, 3]	$0.25t_{CK} + 15$		ns
t_{IFH}	$\overline{IRQx}$ or FI Hold after CLKOUT High[1, 2, 3]	$0.25t_{CK}$		ns
Switching Characteristics:				
t_{FOH}	Flag Output Hold after CLKOUT Low[4]	$0.5t_{CK} - 7$		ns
t_{FOD}	Flag Output Delay from CLKOUT Low[4]		$0.5t_{CK} + 5$	ns

NOTES
[1]If $\overline{IRQx}$ and FI inputs meet t_{IFS} and t_{IFH} setup/hold requirements, they will be recognized during the current clock cycle; otherwise the signals will be recognized on the following cycle. (Refer to "Interrupt Controller Operation" in the Program Control chapter of the *ADSP-2100 Family User's Manual,* Third Edition for further information on interrupt servicing.)
[2]Edge-sensitive interrupts require pulsewidths greater than 10 ns; level-sensitive interrupts must be held low until serviced.
[3]$\overline{IRQx}$ = $\overline{IRQ0}$ and $\overline{IRQ1}$.
[4]Flag Output = FL1 and FO.

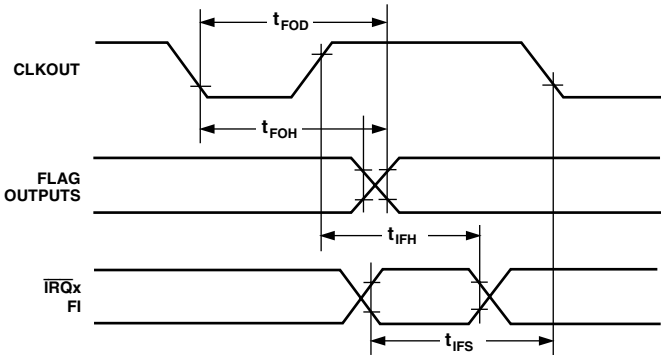

Figure 2. Interrupts and Flags

Parameter		Min	Max	Unit
Bus Request/Grant				
Timing Requirements:				
t_{BH}	$\overline{BR}$ Hold after CLKOUT High[1]	$0.25t_{CK}$ +2		ns
t_{BS}	$\overline{BR}$ Setup before CLKOUT Low[1]	$0.25t_{CK}$ + 17		ns
Switching Characteristics:				
t_{SD}	CLKOUT High to $\overline{DMS}$, $\overline{PMS}$, $\overline{BMS}$, $\overline{RD}$, $\overline{WR}$ Disable		$0.25t_{CK}$ + 10	ns
t_{SDB}	$\overline{DMS}$, $\overline{PMS}$, $\overline{BMS}$, $\overline{RD}$, $\overline{WR}$ Disable to $\overline{BG}$ Low	0		ns
t_{SE}	$\overline{BG}$ High to $\overline{DMS}$, $\overline{PMS}$, $\overline{BMS}$, $\overline{RD}$, $\overline{WR}$ Enable	0		ns
t_{SEC}	$\overline{DMS}$, $\overline{PMS}$, $\overline{BMS}$, $\overline{RD}$, $\overline{WR}$ Enable to CLKOUT High	$0.25t_{CK}$ – 7		ns
t_{SDBH}	$\overline{DMS}$, $\overline{PMS}$, $\overline{BMS}$, $\overline{RD}$, $\overline{WR}$ Disable to $\overline{BGH}$ Low[2]	0		ns
t_{SEH}	$\overline{BGH}$ High to $\overline{DMS}$, $\overline{PMS}$, $\overline{BMS}$, $\overline{RD}$, $\overline{WR}$ Enable[2]	0		ns

NOTES
[1]$\overline{BR}$ is an asynchronous signal. If $\overline{BR}$ meets the setup/hold requirements, it will be recognized during the current clock cycle; otherwise the signal will be recognized on the following cycle. Refer to the *ADSP-2100 Family User's Manual,* Third Edition for $\overline{BR}$/$\overline{BG}$ cycle relationships.
[2]$\overline{BGH}$ is asserted when the bus is granted and the processor requires control of the bus to continue.

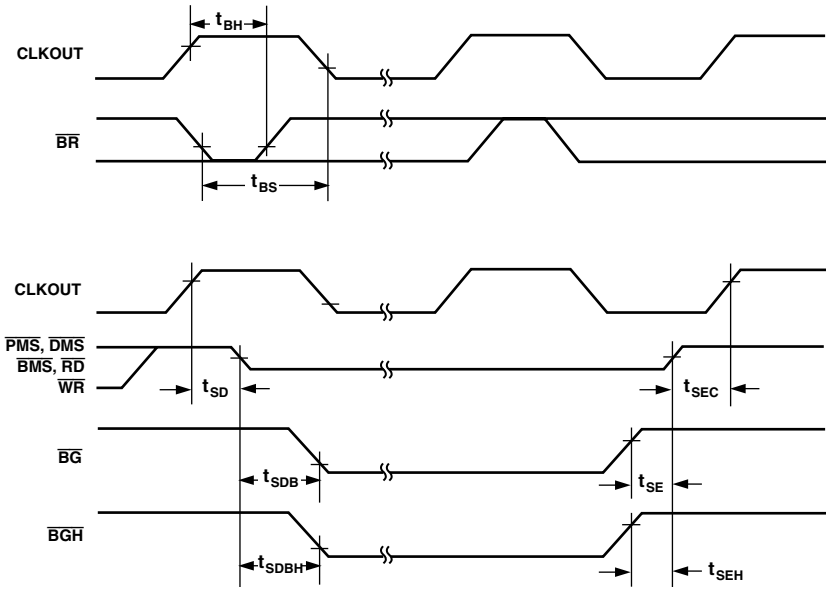

Figure 3. Bus Request–Bus Grant

Parameter		Min	Max	Unit
Memory Read				
Timing Requirements:				
t_{RDD}	$\overline{RD}$ Low to Data Valid		$0.5t_{CK} - 11 + w$	ns
t_{AA}	A0–A13, $\overline{PMS}$, $\overline{DMS}$, $\overline{BMS}$ to Data Valid		$0.75t_{CK} - 12 + w$	ns
t_{RDH}	Data Hold from $\overline{RD}$ High	0		ns
Switching Characteristics:				
t_{RP}	$\overline{RD}$ Pulsewidth	$0.5t_{CK} - 5 + w$		ns
t_{CRD}	CLKOUT High to $\overline{RD}$ Low	$0.25t_{CK} - 5$	$0.25t_{CK} + 7$	ns
t_{ASR}	A0–A13, $\overline{PMS}$, $\overline{DMS}$, $\overline{BMS}$ Setup before $\overline{RD}$ Low	$0.25t_{CK} - 6$		ns
t_{RDA}	A0–A13, $\overline{PMS}$, $\overline{DMS}$, $\overline{BMS}$ Hold after $\overline{RD}$ Deasserted	$0.25t_{CK} - 3$		ns
t_{RWR}	$\overline{RD}$ High to $\overline{RD}$ or $\overline{WR}$ Low	$0.5t_{CK} - 5$		ns

w = wait states × t_{CK}.

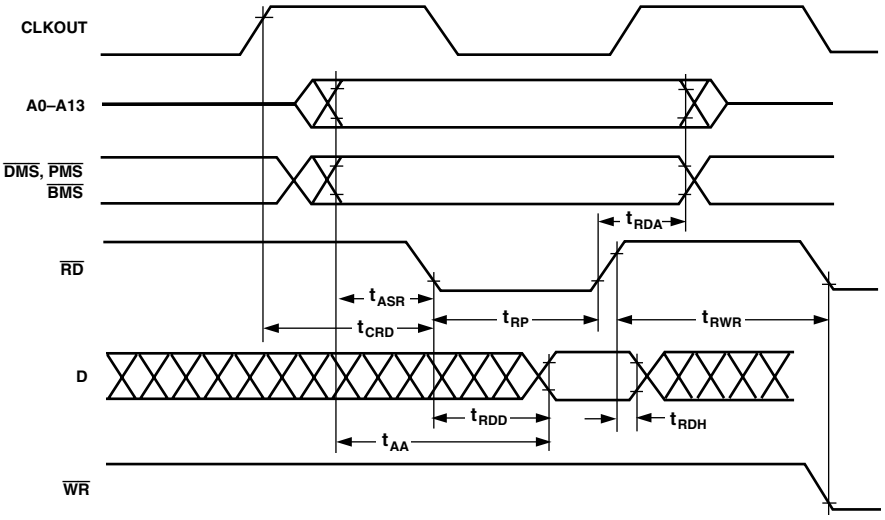

Figure 4. Memory Read

Parameter		Min	Max	Unit
Memory Write				
Switching Characteristics:				
t_{DW}	Data Setup before $\overline{WR}$ High	$0.5t_{CK} - 7 + w$		ns
t_{DH}	Data Hold after $\overline{WR}$ High	$0.25t_{CK} - 2$		ns
t_{WP}	$\overline{WR}$ Pulsewidth	$0.5t_{CK} - 5 + w$		ns
t_{WDE}	$\overline{WR}$ Low to Data Enabled	0		ns
t_{ASW}	A0–A13, $\overline{DMS}$, $\overline{PMS}$ Setup before $\overline{WR}$ Low	$0.25t_{CK} - 6$		ns
t_{DDR}	Data Disable before $\overline{WR}$ or $\overline{RD}$ Low	$0.25t_{CK} - 6$		ns
t_{CWR}	CLKOUT High to $\overline{WR}$ Low	$0.25t_{CK} - 5$	$0.25t_{CK} + 7$	ns
t_{AW}	A0–A13, $\overline{DMS}$, $\overline{PMS}$, Setup before $\overline{WR}$ Deasserted	$0.75t_{CK} - 9 + w$		ns
t_{WRA}	A0–A13, $\overline{DMS}$, $\overline{PMS}$ Hold after $\overline{WR}$ Deasserted	$0.25t_{CK} - 3$		ns
t_{WWR}	$\overline{WR}$ High to $\overline{RD}$ or $\overline{WR}$ Low	$0.5t_{CK} - 5$		ns

w = wait states × t_{CK}.

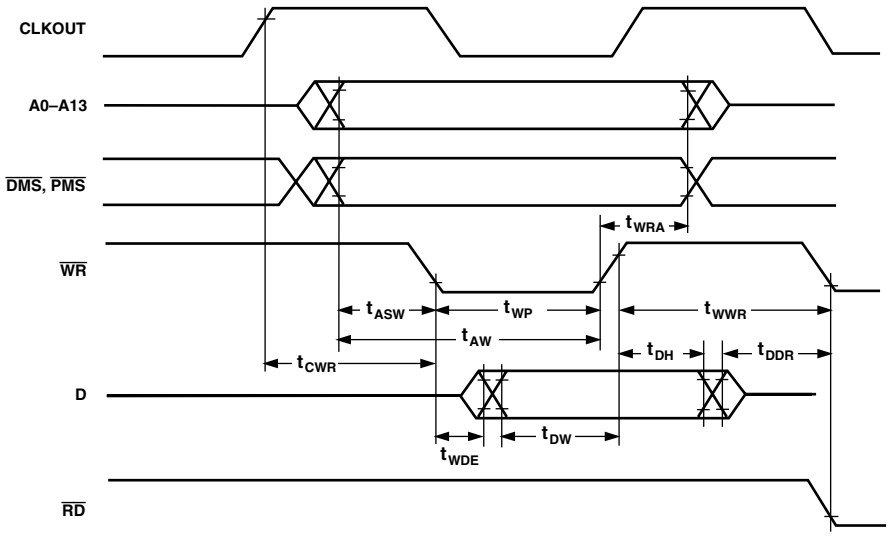

Figure 5. Memory Write

Parameter		Min	Max	Unit
Serial Ports				
Timing Requirements:				
t_{SCK}	SCLK Period	50		ns
t_{SCS}	DR/TFS/RFS Setup before SCLK Low	5		ns
t_{SCH}	DR/TFS/RFS Hold after SCLK Low	10		ns
t_{SCP}	$SCLK_{IN}$ Width	20		ns
Switching Characteristics:				
t_{CC}	CLKOUT High to $SCLK_{OUT}$	$0.25t_{CK}$	$0.25t_{CK} + 15$	ns
t_{SCDE}	SCLK High to DT Enable	0		ns
t_{SCDV}	SCLK High to DT Valid		20	ns
t_{RH}	TFS/RFS_{OUT} Hold after SCLK High	0		ns
t_{RD}	TFS/RFS_{OUT} Delay from SCLK High		20	ns
t_{SCDH}	DT Hold after SCLK High	0		ns
t_{TDE}	TFS(Alt) to DT Enable	0		ns
t_{TDV}	TFS(Alt) to DT Valid		20	ns
t_{SCDD}	SCLK High to DT Disable		20	ns
t_{RDV}	RFS (Multichannel, Frame Delay Zero) to DT Valid		20	ns

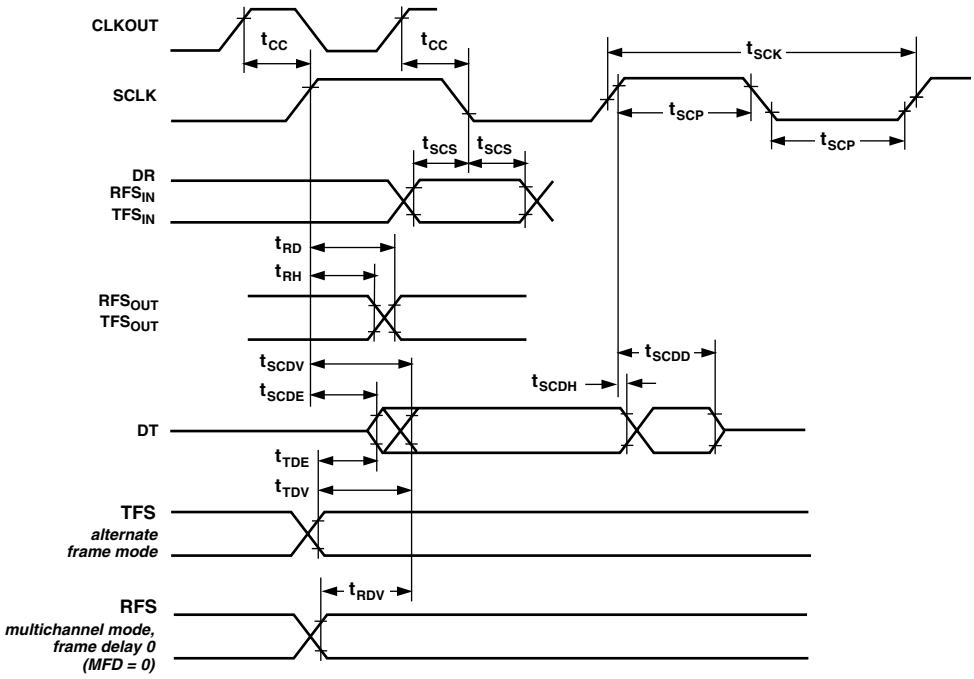

Figure 6. Serial Ports

POWER DISSIPATION

To determine total power dissipation in a specific application, the following equation should be applied for each output:

$$C \times V_{DD}^2 \times f$$

C = load capacitance, f = output switching frequency.

Example:

In an application where external data memory is used and no other outputs are active, power dissipation is calculated as follows:

Assumptions:

- External data memory is accessed every cycle with 50% of the address pins switching.
- External data memory writes occur every other cycle with 50% of the data pins switching.
- Each address and data pin has a 10 pF total load at the pin.
- The application operates at V_{DD} = 5.0 V and t_{CK} = 38.5 ns.

$$\textit{Total Power Dissipation} = P_{INT} + (C \times V_{DD}^2 \times f)$$

$P_{INT} = V_{DD} \times (I_{DD}\ Digital + I_{DD}\ Analog)$

$(C \times V_{DD}^2 \times f)$ is calculated for each output:

	# of Pins	× C	× V_{DD}^2	× f		
Address, $\overline{DMS}$	8	× 10 pF	× 5^2 V	× 26 MHz	=	52.00 mW
Data Output, $\overline{WR}$	9	× 10 pF	× 5^2 V	× 13 MHz	=	29.25 mW
$\overline{RD}$	1	× 10 pF	× 5^2 V	× 13 MHz	=	3.25 mW
CLKOUT	1	× 10 pF	× 5^2 V	× 26 MHz	=	6.50 mW
						91.00 mW

Total power dissipation for this example is P_{INT} + 91 mW.

TEST CONDITIONS

Output Disable Time

Output pins are considered to be disabled when they have stopped driving and started a transition from the measured output high or low voltage to a high impedance state. The output disable time (t_{DIS}) is the difference of $t_{MEASURED}$ and t_{DECAY}, as shown in the Output Enable/Disable diagram. The time is the interval from when a reference signal reaches a high or low voltage level to when the output voltages have changed by 0.5 V from the measured output high or low voltage. The decay time, t_{DECAY}, is dependent on the capacitative load, C_L, and the current load, i_L, on the output pin. It can be approximated by the following equation:

$$t_{DECAY} = \frac{C_L \times 0.5\ V}{I_L}$$

from which

$$t_{DIS} = t_{MEASURED} - t_{DECAY}$$

is calculated. If multiple pins (such as the data bus) are disabled, the measurement value is that of the last pin to stop driving.

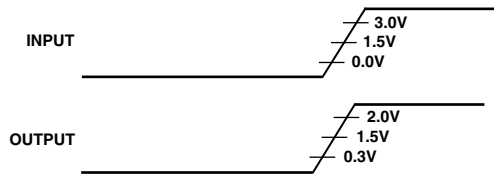

Figure 7. Voltage Reference Levels for AC Measurements (Except Output Enable/Disable)

Output Enable Time

Output pins are considered to be enabled when that have made a transition from a high-impedance state to when they start driving. The output enable time (t_{ENA}) is the interval from when a reference signal reaches a high or low voltage level to when the output has reached a specified high or low trip point, as shown in the Output Enable/Disable diagram. If multiple pins (such as the data bus) are enabled, the measurement value is that of the first pin to start driving.

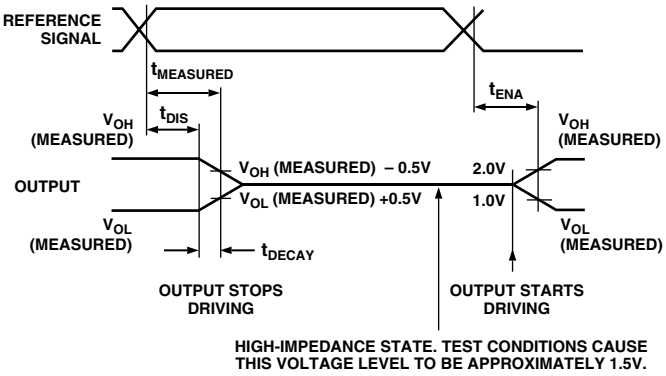

Figure 8. Output Enable/Disable

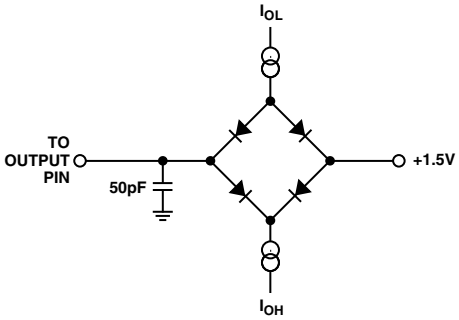

Figure 9. Equivalent Device Loading for AC Measurements (Including All Fixtures)

PIN FUNCTION DESCRIPTION

Pin No.	Pin Name	Pin No.	Pin Name	Pin No.	Pin Name	Pin No.	Pin Name
1	A9	37	RFS1/$\overline{\text{IRQ0}}$/$\overline{\text{SROM}}$	73	GND	109	CONVST
2	A8	38	TFS1/$\overline{\text{IRQ1}}$	74	D10	110	GND
3	A7	39	SCLK1	75	D9	111	VDD
4	A6	40	DR0	76	D8	112	GND
5	VDD	41	DT0	77	D7	113	AVDD
6	A5	42	RFS0	78	D6	114	AVSS
7	A4	43	TFS0	79	D5	115	VIN7
8	A3	44	SCLK0	80	D4	116	V_{REF}
9	GND	45	VDD	81	D3	117	VIN6
10	A2	46	GND	82	GND	118	REFCOM
11	A1	47	$\overline{\text{PWMTRIP}}$	83	D2	119	VIN5
12	A0	48	PWMSYNC	84	D1	120	CAPT
13	$\overline{\text{PWD}}$	49	CL	85	D0	121	VIN4
14	PWDACK	50	CH	86	P11	122	BSHAN
15	$\overline{\text{BR}}$	51	VDD	87	P10	123	ASHAN
16	NC	52	GND	88	P9	124	VIN0
17	NC	53	BL	89	P8	125	CAPB
18	BMODE	54	BH	90	VDD	126	VIN1
19	MMAP	55	AL	91	GND	127	CML
20	VDD	56	AH	92	P7	128	VIN2
21	GND	57	$\overline{\text{BGH}}$	93	P6	129	GAIN
22	$\overline{\text{PWMSR}}$	58	D23	94	P5	130	VIN3
23	$\overline{\text{POR}}$	59	D22	95	P4	131	SENSE
24	$\overline{\text{RESET}}$	60	D21	96	P3	132	AVSS
25	GND	61	D20	97	P2	133	AVDD
26	GND	62	D19	98	GND	134	$\overline{\text{BMS}}$
27	GND	63	GND	99	P1	135	$\overline{\text{PMS}}$
28	PWMPOL	64	D18	100	P0	136	$\overline{\text{DMS}}$
29	CLKIN	65	D17	101	AUX1	137	$\overline{\text{RD}}$
30	XTAL	66	D16	102	AUX0	138	GND
31	CLKOUT	67	D15	103	ETU1	139	$\overline{\text{BG}}$
32	VDD	68	D14	104	ETU0	140	$\overline{\text{WR}}$
33	GND	69	D13	105	EIS	141	A13
34	DR1A/FI	70	D12	106	EIZ	142	A12
35	DRIB/FI	71	VDD	107	EIB	143	A11
36	DT1/FO	72	D11	108	EIA	144	A10

NC: These pins must be left unconnected

PIN CONFIGURATION

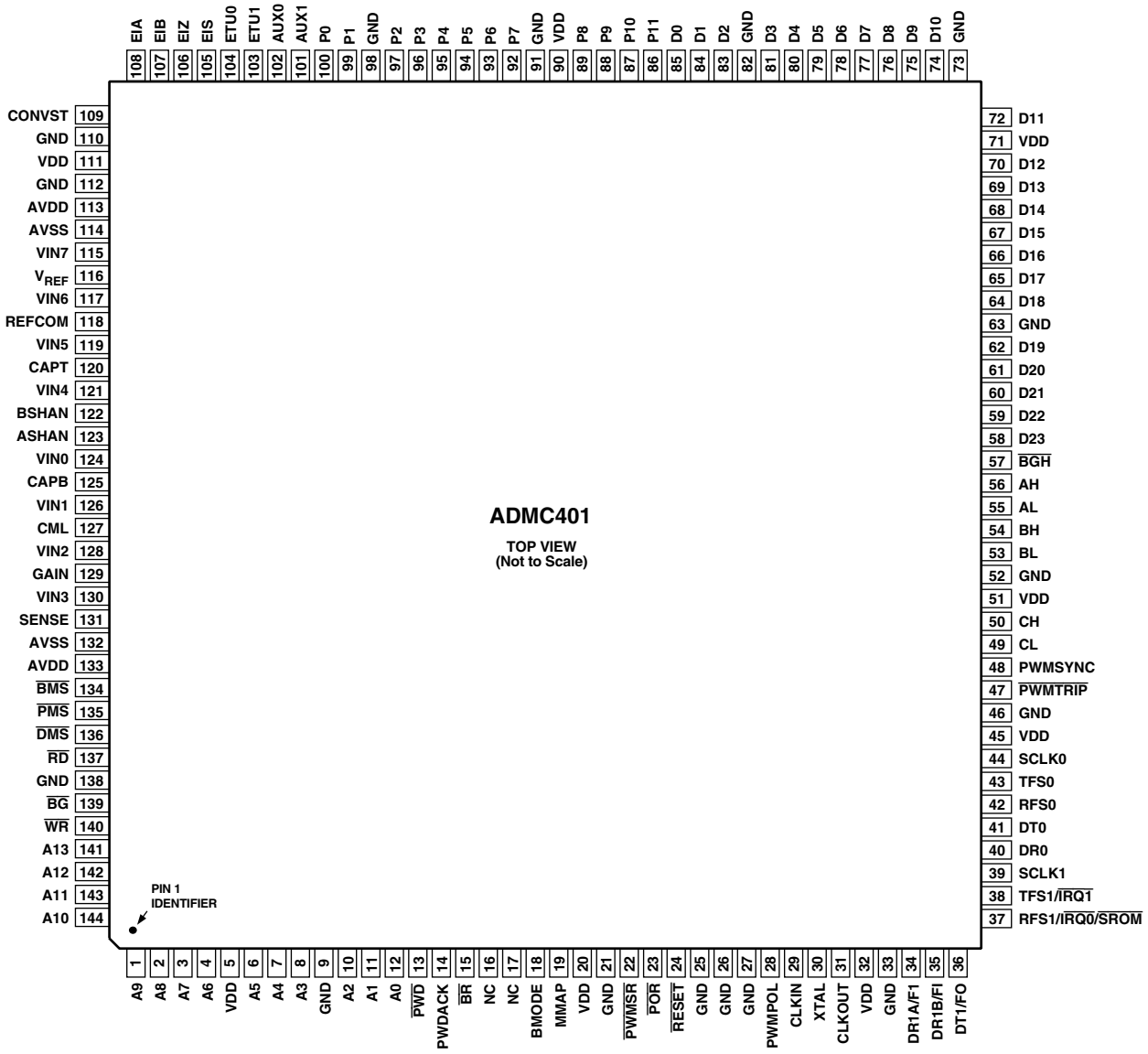

NC = NO CONNECT

(Continued from Page 1)

Programmable Digital I/O (PIO) Port
- **12-Pin Configurable Digital I/O Port**
- **Flexible Interrupt Generation**
- **Four Dedicated PIO Interrupt Vectors**
- **Each I/O Line Configurable as PWM Shutdown**

Two 8-Bit Auxiliary PWM Outputs
- **Programmable Switching Frequency**
- **Independent or Offset Modes**

Two-Channel Event Timer (Capture) Unit
- **Configurable Event Definition**
- **Single-Shot or Free-Running Modes**

Peripheral Interrupt Controller
- **Manages Peripheral Interrupts**

16-Bit Watchdog Timer

Internal Power-On Reset System

Programmable 16-Bit Interval Timer with Prescaler

Two Double Buffered Synchronous Serial Ports
- **Boot Load Protocols via SPORT1:**
  - **Synchronous E²PROM/SROM Booting**
  - **UART Boot Loader with Autobaud**
  - **Synchronous Master or Slave Boot Loader**
- **Debugger Interface via SPORT1:**
  - **UART Interface with Autobaud**
  - **Synchronous Master or Slave Interface**

Full Debugger for Program Development

Industrial Temperature Range –40°C to +85°C

Operating Voltage 5.0 V ± 5%

Package: 144-Lead LQFP

GENERAL DESCRIPTION

The ADMC401 is a single-chip DSP-based controller, suitable for high performance control of ac induction motors (ACIM), permanent magnet synchronous motors (PMSM), brushless dc motors (BDCM) and switched reluctance (SR) motors in industrial applications. The ADMC401 integrates a 26 MIPS, fixed-point DSP core with a complete set of motor control peripherals that permits fast motor control in a highly integrated environment.

The DSP core of the ADMC401 is the ADSP-2171 which is completely code compatible with the ADSP-21xx DSP family (as well as other members of the integrated motor controllers of the ADMC3xx family) and combines three computational units, data address generators and a program sequencer. The computational units comprise an ALU, a multiplier/accumulator (MAC) and a barrel shifter. The DSP core also adds instructions for bit manipulation, squaring (x^2), biased rounding and global interrupt masking. In addition, two flexible double-buffered, bidirectional synchronous serial ports are included in the ADMC401.

The ADMC401 provides 2K × 24-bit internal program memory RAM, 2K × 24-bit internal program memory ROM and 1K × 16-bit internal data memory RAM. The program and data memory RAM can be boot loaded through the serial port from either a serial E²PROM, through a UART connection (either from external host microprocessor or from the Motion Control Debugger) or via a synchronous serial interface from a host microprocessor. Alternatively, the internal program and data memory RAM may be booted from an external device across the address and data buses. The program memory ROM includes a monitor that adds software debugging features through the serial port.

Additionally, the ADMC401 device adds significant external memory and peripheral expansion capabilities by making available the full address and data bus of the DSP core. This feature permits expansion of both external program and data memory and means that the DSP core can address up to 14K × 24 bits of external program memory and up to 13K × 16 bits of external data memory.

The ADMC401 contains a number of special purpose, motor control peripherals. The first is a high performance, 8-channel, 12-bit ADC system with dual channel simultaneous sampling ability across 4 pair of inputs. An internal precision voltage reference is also available as part of the ADC system. In addition, a three-phase, 16-bit, center-based PWM generation unit can be used to produce high-accuracy PWM signals with minimal processor overhead. The ADMC401 also contains a flexible incremental encoder interface unit for position sensor feedback; two adjustable-frequency auxiliary PWM outputs, 12 lines of digital I/O; a 2-channel event capture system; a 16-bit watchdog timer; two 16-bit interval timers (one of which can be linked to the encoder interface unit) and an interrupt controller that manages all peripheral interrupts. Finally, the ADMC401 contains an integrated power-on-reset (POR) circuit that can be used to generate the required reset signal for the device on power-on.

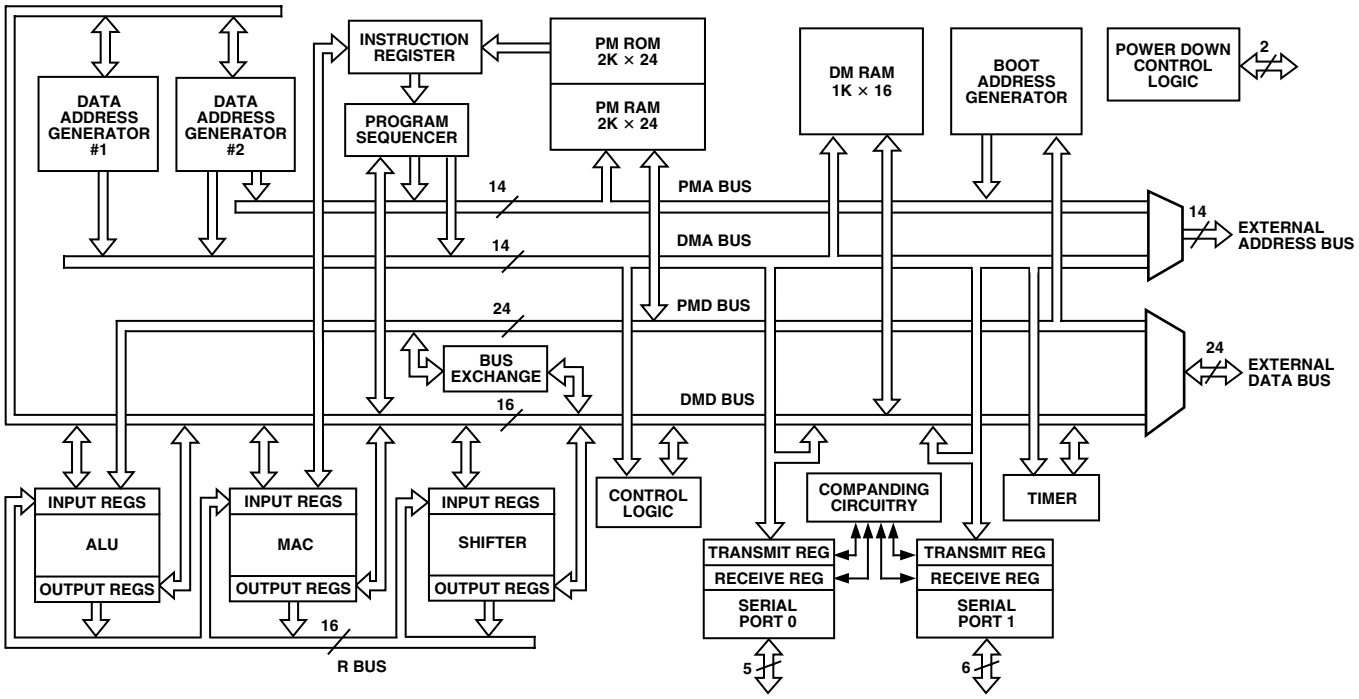

Figure 10. DSP Core Block Diagram

ARCHITECTURE OVERVIEW

Figure 10 is a functional block diagram of the DSP core of the ADMC401. The DSP core is based on the fixed-point ADSP-2171 core that is a member of the fixed-point ADSP-21xx family of general purpose DSPs from Analog Devices Inc. The ADSP-2171 flexible architecture and comprehensive instruction set allow the processor to perform multiple operations in parallel.

In one processor cycle (38.5 ns with a 13 MHz crystal) the DSP core can:

- Generate the next program address.
- Fetch the next instruction.
- Perform one or two data moves.
- Update one or two data address pointers.
- Perform a computational operation.

This all takes place while the ADMC401 continues to:

- Receive and transmit through the serial ports.
- Decrement the interval timers.
- Generate PWM signals.
- Convert the ADC input signals.
- Operate the encoder interface unit.
- Operate all other peripherals including the auxiliary PWM and event timer subsystem.

The processor contains three independent computational units: the arithmetic and logic unit (ALU), the multiplier/accumulator (MAC) and the shifter. The computational units process 16-bit data directly and have provisions to support multiprecision computations. The ALU performs a standard set of arithmetic and logic operations; division primitives are also supported. The MAC performs single-cycle multiply, multiply/add, multiply/subtract operations with 40 bits of accumulation. The shifter performs logical and arithmetic shifts, normalization, denormalization and derive exponent operations. The shifter can be used to implement numeric format control efficiently, including floating-point representations. The internal result (R) bus directly connects the computational units so that the output of any unit may be the input of any unit on the next cycle.

A powerful program sequencer and two dedicated data address generators ensure efficient delivery of operands to these computational units. The sequencer supports conditional jumps, subroutine calls and returns in a single cycle. With internal loop counters and loop stacks, the ADMC401 executes looping code with zero overhead; no explicit jump instructions are required to maintain the loop.

Two data address generators (DAGs) provide addresses for simultaneous dual operand fetches from data memory and program memory. Each DAG maintains and updates four address pointers (I registers). Whenever the pointer is used to access data (indirect addressing), it is post-modified by the value in one of four modify (M) registers. A length value may be associated with each pointer (L registers) to implement automatic modulo addressing for circular buffers. The circular buffering feature is also used by the serial ports for automatic data transfers to and from on-chip memory. DAG1 generates only data memory addresses but provides an optional bit-reversal capability. DAG2 may generate either program or data memory addresses, but has no bit-reversal capability.

Efficient data transfer is achieved with the use of five internal buses:

- Program Memory Address (PMA) Bus.
- Program Memory Data (PMD) Bus.
- Data Memory Address (DMA) Bus.
- Data Memory Data (DMD) Bus.
- Result (R) Bus.

Program memory can store both instructions and data, permitting the ADMC401 to fetch two operands in a single cycle, one from internal program memory and one from internal data memory. The ADMC401 can fetch an operand from on-chip program memory and the next instruction in the same cycle.

The ADMC401 writes data from its 16-bit registers to the 24-bit program memory using the PX register to provide the lower eight bits. When it reads data (not instructions) from 24-bit program memory to a 16-bit data register, the lower eight bits are placed in the PX register.

The ADMC401 can respond to a number of distinct DSP core and peripheral interrupts. The DSP core interrupts include serial port receive and transmit interrupts, timer interrupts, software interrupts and external interrupts. In addition, there is a master $\overline{\text{RESET}}$ signal. The motor control peripherals also produce interrupts to the DSP core.

The two serial ports (SPORTs) provide a complete synchronous serial interface with optional companding in hardware and a wide variety of framed and unframed data transmit and receive modes of operation. Each SPORT can generate an internal programmable serial clock or accept an external serial clock.

Boot loading of both the program and data memory RAM of the ADMC401 can be through the serial port SPORT1. Alternatively the ADMC401 can be boot loaded from an external byte-wide memory connected to the external address and data buses. After reset, seven wait states are automatically generated. This permits, for example, a 38.5 ns ADMC401 to use an external 250 ns EPROM as boot memory. The internal boot address generator provides the addresses for booting from an external byte-wide memory.

A programmable interval counter is also included in the DSP core and can be used to generate periodic interrupts. A 16-bit count register (TCOUNT) is decremented every *n* processor cycles, where *n-1* is a scaling value stored in the 8-bit TSCALE register. When the value of the counter reaches zero, an interrupt is generated and the count register is reloaded from a 16-bit period register (TPERIOD).

The ADMC401 instruction set provides flexible data moves and multifunction (one or two data moves with a computation) instructions. Each instruction is executed in a single 38.5 ns processor cycle (for a 13 MHz crystal). The ADMC401 assembly language uses an algebraic syntax for ease of coding and readability. A comprehensive set of development tools supports program development.

Serial Ports

The ADMC401 incorporates two complete synchronous serial ports (SPORT0 and SPORT1) for serial communications and multiprocessor communication. The following is a brief list of the capabilities of the ADMC401 SPORTs. Refer to the *ADSP-2100 Family User's Manual,* Third Edition for further details.

- SPORTs are bidirectional and have a separate, double-buffered transmit and receive section.
- SPORTs can use an external serial clock or generate their own serial clock internally.
- SPORTs have independent framing for the receive and transmit sections. Sections run in a frameless mode or with frame synchronization signals internally or externally generated. Frame synchronization signals are active high or inverted, with either of two pulsewidths and timings.

  SPORTs support serial data word lengths from 3 bits to 16 bits and provide optional A-law and μ-law companding.
- SPORT receive and transmit sections can generate unique interrupts on completing a data word transfer.
- SPORTs can receive and transmit an entire circular buffer of data with only one overhead cycle per data word. An interrupt is generated after a data buffer transfer.
- SPORT0 has a multichannel interface to selectively receive and transmit a 24-word or 32-word, time-division multiplexed, serial bitstream.
- SPORT1 can be configured to have two external interrupts ($\overline{\text{IRQ0}}$ and $\overline{\text{IRQ1}}$), and the Flag In and Flag Out signals. The internally generated serial clock may still be used in this configuration.

The following are additional capabilities of the ADMC401 SPORTs that are not part of the ADSP-21xx products:

- SPORT1 is the input for single pin program and data memory boot loading. The RFS1 pin can be configured internally to the ADMC401 as an SROM/E^2PROM reset signal.
- SPORT1 has two data receive pins (DR1A and DR1B). The DR1A pin is intended only for synchronous data receive from the external E^2PROM. The DR1B pin can be used as the data receive pin for a general purpose SPORT after booting or as the data receive pin for other boot load modes or as the UART/debugger interface. The DR1A and DR1B pins are internally multiplexed onto the one data receive pin of the SPORT. The particular data receive pin selected is determined by Bit 4 of the MODECTRL register.

PIN FUNCTION DESCRIPTION

The ADMC401 is available in an 144-lead TQFP package. Table I contains the pin descriptions.

Table I. Pin List

Pin Group Name	# of Pins	Input/ Output	Function
A13–A0	14	O	Address Lines
D23–D0	24	I/O	Data Lines
$\overline{PMS}$, $\overline{DMS}$, $\overline{BMS}$	3	O	External Memory Select Lines
$\overline{RD}$, $\overline{WR}$	2	O	External Memory Read/Write Enable
MMAP	1	I	Memory Map Select
$\overline{POR}$	1	O	Internal Power On Reset Output
$\overline{RESET}$	1	I	Processor Reset Input
CLKOUT	1	O	Processor Clock Output
CLKIN, XTAL	2	I, O	External Clock or Quartz Crystal Input
$\overline{BR}$	1	I	Bus Request
$\overline{BG}$, $\overline{BGH}$	2	O	Bus Grant and Bus Hang Control
BMODE	1	I	Boot Mode Select
$\overline{PWD}$, PWDACK	2	I, O	Power-Down and Power-Down Acknowledge
SPORT0	5	I/O	Serial Port 0 Pins (TFS0, RFS0, DT0, DR0, SCLK0)
SPORT1	6	I/O	Serial Port 1 (TFS1/$\overline{IRQ1}$, RFS1/ $\overline{IRQ0}$/$\overline{SROM}$, DT1/FO, DR1A/FI, DR1B/FI, SCLK1)
VIN0–VIN7	8	I	Analog Inputs
ASHAN, BSHAN	2	I	Inverting Inputs to Sample and Hold Amplifiers
GAIN	1	I	Analog Input for Gain Calibration
V_{REF}	1	I/O	Reference Voltage Input/Output
REFCOM	1	GND	Reference Common
CML	1	O	Common-Mode Level (Midsupply)
CAPT, CAPB	2	O	Noise Reduction Pins
SENSE	1	I	Voltage Reference Select
CONVST	1	I	External Convert Start
AH-CL	6	O	PWM Outputs
$\overline{PWMTRIP}$	1	I	PWM Shutdown Signal
PWMPOL	1	I	PWM Polarity Control
PWMSYNC	1	O	PWM Synchronization Output
$\overline{PWMSR}$	1	I	PWM Switched Reluctance Mode Control
PIO0–PIO11	12	I/O	Digital I/O Port
ETU0, ETU1	2	I	Event Timer Inputs
AUX0–AUX1	2	O	Auxiliary PWM Outputs
EIA, EIB, EIZ, EIS	4	I	Encoder Interface Inputs and External Registration Inputs
NC	2		No Connect
AVDD	2	SUP	Analog Power Supply
AVSS	2	GND	Analog Ground
VDD	8	SUP	Digital Power Supply
GND	16	GND	Digital Ground

INTERRUPT OVERVIEW

The ADMC401 can respond to different interrupt sources, some of which are internal DSP core interrupts and others from the motor control peripherals. The DSP core interrupts include a:

- Power up (or $\overline{RESET}$) interrupt.
- A peripheral (or $\overline{IRQ2}$) interrupt.
- A SPORT0 receive and a SPORT0 transmit interrupt.
- A SPORT1 receive (or $\overline{IRQ0}$) and a SPORT1 transmit (or $\overline{IRQ1}$) interrupt.
- Two software interrupts.
- An interval timer timeout interrupt.
- A power-down interrupt.

In addition, the motor control peripherals add other interrupts that include:

- A PWMSYNC interrupt.
- An ADC end of conversion interrupt.
- An encoder loop timer timeout interrupt.
- Five peripheral input/output (PIO) interrupts.
- An event timer interrupt.
- An encoder count error interrupt.
- A PWM trip interrupt.

The interrupts are internally prioritized and individually maskable except for the nonmaskable power-down interrupt.

Memory Map

The ADMC401 has two distinct memory types; program memory and data memory (in addition to external boot memory). In general, program memory contains user code and coefficients, while the data memory is used to store variables and data during program execution. Both program memory RAM and ROM is provided internally on the ADMC401. The program memory map of the ADMC401 can be altered depending on the state of the MMAP and BMODE pins. The various program memory maps are illustrated in Figure 11 for the permissible settings of MMAP and BMODE. The state of these pins also impact the way in which the internal memory of the ADMC401 is booted, as described later.

There is 2K of internal ROM on the ADMC401. Setting the ROMENABLE bit on the Data Memory Wait State Control Register (at address DM (0x3FFE)) enables the ROM. When the ROMENABLE bit is set to 1, addressing program memory in the ROM range will access the on-chip ROM. When ROMENABLE is set to zero, addressing program memory in this range will access external program memory. The ROMENABLE bit is initialized to zero after reset unless MMAP and BMODE = 1.

When MMAP = BMODE = 0, the ADMC401 provides 2K × 24 bits of internal program memory RAM starting at address 0x0000 that is booted from a byte-wide interface on the address and data buses. Following boot loading, program execution starts at address 0x0000. In this mode, the remainder of the program memory space, a 12K × 24-bit block starting at address 0x1000, is assigned to external memory.

When MMAP = BMODE = 1, the program memory map is identical to the previous case, but ROMENABLE defaults to 1 at reset, and execution starts from the internal program memory ROM located at address 0x0800. This permits the internal (and external if desired) memory to be boot loaded across the various serial interfaces on SPORT1.

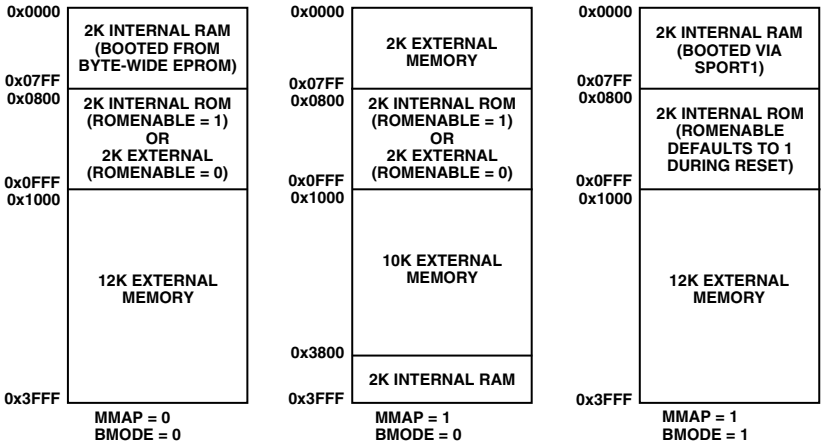

Figure 11. Program Memory Map of ADMC401

When MMAP = 1 and BMODE = 0, the internal program memory RAM is mapped to the top of the program memory space (starting at address 0x3800) and no boot loading occurs. Program execution starts from external program memory at address 0x0000.

Only with ROMENABLE = 1 are the internal ROM monitor and debugger features of the ADMC401 available for program development. Additionally, certain spaces of the memory map have predefined functions as illustrated in Figure 12 where it can be seen that address space 0x0000 to 0x005F is reserved for the interrupt vector table.

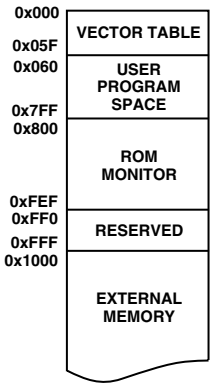

Figure 12. Detailed View of Program Memory Map with MMAP = BMODE = 1

The program memory interface can generate 0 to 7 wait states for external memory devices. The program memory wait state field (PWAIT) in the System Control Register controls the number of inserted wait states and defaults to 7. The structure of the System Control Register is shown at the end of the data sheet.

The data memory map of the ADMC401 is shown in Figure 13. The internal data memory RAM of the ADMC401 is arranged as a single 1K × 16-bit block starting at address 0x3800. In addition, there are two 1K blocks of reserved data memory space; one block starting at address 0x2000 that is reserved for the peripheral registers and one starting at address 0x3C00 that is reserved for internal DSP core registers. Data memory wait states are controlled by the DWAIT0, DWAIT1, DWAIT2, DWAIT3 and DWAIT4 fields of the Data Memory Wait State Register (MEMWAIT) as illustrated in Figure 13. Following reset, DWAIT0 = DWAIT1 = DWAIT2 = DWAIT 3 = DWAIT4 = 7. However, in standalone mode with MMAP = BMODE = 1, the internal monitor code writes 0 to these five fields. For correct operation DWAIT2 must always be 0. The configuration of the MEMWAIT register is shown at the end of the data sheet.

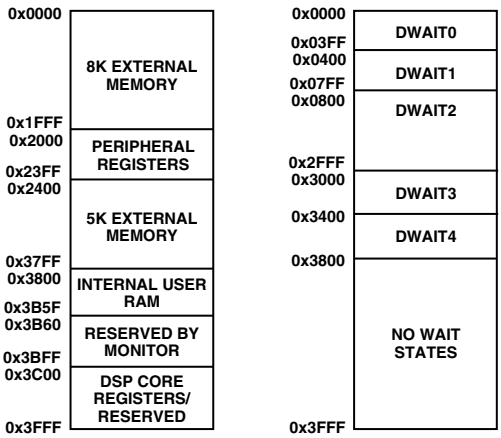

Figure 13. Data Memory Map of the ADMC401

ROM Code

The 2K × 24-bit block of internal program memory ROM starting at address 0x800 contains a monitor function that can be used to download and execute user programs via the serial port. In addition, the monitor function supports an interactive mode in which commands are received and processed from a host that is configured as a UART device. An example of such a host is the Windows-based Motion Control Debugger that is part of the software development system for the ADMC401. In the interactive mode, the host can access both the internal DSP and peripheral motor control registers of the ADMC401, read and write to both program and data memory, implement breakpoints and perform single-step operation as part of the program debugging cycle. Again, this debugging feature is only available when ROMENABLE = 1.

SYSTEM INTERFACE

CLOCK SIGNALS

The ADMC401 uses an input clock with a frequency equal to half the instruction rate; a 13 MHz input clock yields a 38.5 ns processor cycle (which is equivalent to 26 MHz). Normally instructions are executed in a single processor cycle. All device timing is relative to the internal instruction rate, which is indicated by the CLKOUT signal (when enabled). Throughout this data sheet, the period of the CLKIN signal is denoted by t_{CKI}. The DSP instruction period is t_{CK} (the period of the CLKOUT signal), and $t_{CK} = 0.5 \times t_{CKI}$. For 26 MIPS operation, a 13 MHz CLKIN signal is used, corresponding to t_{CKI} = 76.9 ns and t_{CK} = 38.5 ns. Additionally, t_{CK} is the fundamental time increment of the motor control peripherals. Therefore, unless otherwise specified, the motor control peripherals are clocked at a rate equal to CLKOUT. The ADMC401 can be clocked by either a crystal or by an external clock source. The CLKIN input cannot be halted, changed in frequency, or operated below the specified minimum frequency during normal operation.

If an external clock source is used, it should be a TTL-compatible signal running at half the instruction rate. The signal is connected to the CLKIN pin of the ADMC401. In this mode, with an external clock signal, the XTAL pin must be left unconnected.

Because the ADMC401 includes an on-chip oscillator circuit, an external crystal may be used instead of a clock source. The crystal should be connected across the CLKIN and XTAL pins. A parallel-resonant, fundamental frequency, microprocessor-grade crystal should be used. The frequency value selected for the crystal should be equal to half the desired instruction rate for the processor. Figure 15 shows a 13 MHz crystal properly connected to yield a 26 MHz processor rate.

The CLKOUT output can be enabled and disabled by the CLKODIS bit of the SPORT0 Autobuffer Control Register, DM (0x3FF3). However, extreme care must be exercised when using this bit (and is thus discouraged) since disabling CLKOUT effectively disables all motor control peripherals, except the watchdog timer.

RESET AND POWER-ON RESET CIRCUIT

The $\overline{\text{RESET}}$ pin initiates a complete hardware reset of the ADMC401 when pulled low. The $\overline{\text{RESET}}$ signal must be asserted when the device is powered up to assure proper initialization. The ADMC401 contains an integrated power-on reset circuit that provides an output reset signal, $\overline{\text{POR}}$, from the ADMC401 on power up and if the power supply voltage falls below the threshold level. The ADMC401 may be reset from an external source using the $\overline{\text{RESET}}$ signal or alternatively the internal power-on reset circuit may be used by connecting the $\overline{\text{POR}}$ pin to the $\overline{\text{RESET}}$ pin. During power-up the $\overline{\text{RESET}}$ line must be activated for long enough to allow the DSP core's internal clock to stabilize. The power-up sequence is defined as the total time required for the crystal oscillator to stabilize after a valid V_{DD} is applied to the processor and for the internal phase locked loop (PLL) to lock onto the specific crystal frequency. A minimum of $2000t_{CKI}$ cycles will ensure that the PLL has locked (this does not include the crystal oscillator start-up time).

The operation of the internal power-on reset circuit is illustrated in Figure 14. On power-up, the circuit maintains the $\overline{\text{POR}}$ pin low until it detects that the V_{DD} line has attained the threshold voltage, V_{RST} level. As soon as the threshold voltage is attained, the power on reset circuit enables a 17-bit counter that is clocked at the CLKOUT rate. While the counter is counting the $\overline{\text{POR}}$ pin is held low. When the counter overflows, after a time:

$$t_{RST} = 2^{16} \times 38.5 \times 10^{-9} = 2.52\ ms$$

the $\overline{\text{POR}}$ pin is brought high and if the $\overline{\text{POR}}$ and $\overline{\text{RESET}}$ pins are connected, the device is brought out of reset.

The internal power-on reset circuit also acts as a power supply monitor and puts the $\overline{\text{POR}}$ pin at a LO level if it detects a voltage less than V_{RST}–V_{HYST}, where V_{HYST} is the hysteresis voltage built into the POR circuit. The supply voltage must then exceed V_{RST} to initiate another power-on reset sequence.

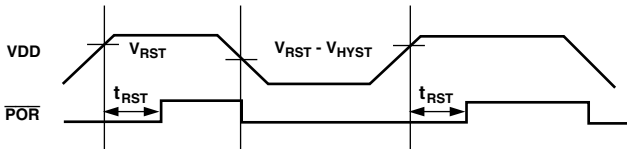

Figure 14. Operation of Power-On Reset (POR) Circuit of ADMC401

The master reset ($\overline{\text{RESET}}$ = LO) causes a Full System Reset, which sets all internal stack pointers to the empty stack condition, masks all interrupts, clears the MSTAT register, restores the program counter to its initial value and performs a full reset of all of the motor control peripherals including the watchdog timer. Following a power-up, it is possible to initiate a Full System Reset by simply pulling the $\overline{\text{RESET}}$ low. For these resets, there is no need to wait for PLL stabilization and the $\overline{\text{RESET}}$ signal must meet the minimum pulsewidth specification, t_{RSP}. To generate the external $\overline{\text{RESET}}$ signal, it is recommended to use either an RC circuit with a Schmitt trigger or a commercially available reset IC.

Separate from a Full System Reset, a software controlled Peripheral Reset (excluding the watchdog timer) is achieved by toggling the DSP FL2 flag with the following code segment:

```
PRESET:  SET FL2;
         TOGGLE FL2;
         TOGGLE FL2;
         RTS;
```

A full DSP and peripheral reset (except the watchdog timer itself) will occur automatically on a watchdog trip.

EXTERNAL MEMORY INTERFACE

The ADMC401 can address 14K × 24 bits of external program memory and up to 13K × 16 bits of external data memory. The ADMC401 provides the address on a 14-bit address bus (A13–A0). Instructions or data are transferred across the 24-bit data bus (D23–D0) during program memory accesses. During data memory accesses, data is transferred on the 16 most significant bits (D23–D8) of the data bus. For a dual off-chip fetch, the data from program memory is read first, then the data from data memory. The program memory select pin, $\overline{\text{PMS}}$, is activated during external program memory accesses and can be used as a chip select signal for the external program memory devices. Similarly, for external data memory accesses, the $\overline{\text{DMS}}$ pin is activated.

Two control lines indicate the direction of the transfer. Memory read, $\overline{RD}$, is active low, signaling a read from external memory and memory write; $\overline{WR}$, is active low, signaling a write to external memory. Typically, the $\overline{PMS}$ line is connected to the $\overline{CE}$ (chip enable) of the external program memory and the $\overline{RD}$ line is connected to the $\overline{CE}$ line of the external data memory. The $\overline{RD}$ line is connected to the $\overline{OE}$ (output enable) and the $\overline{WR}$ line is connected to the $\overline{WE}$ (write enable) of both memories.

On-chip accesses (to internal program memory RAM and ROM) do not drive any of the external signals. The $\overline{PMS}$, $\overline{RD}$ and the $\overline{WR}$ lines remain high (deasserted) and the address and data buses are three-stated during these internal accesses. Similarly, internal accesses to data memory (including internal DM RAM and peripheral and DSP core memory mapped registers) do not drive external signals and the $\overline{DMS}$, $\overline{RD}$ and the $\overline{WR}$ lines remain high (deasserted) and the address and data buses are also three-stated.

External peripherals can also be connected externally and memory mapped to the external memory space of the ADMC401. The 16 MSBs of the external data bus are connected internally to the 16 bits of the internal data memory bus. Therefore, the data lines D23–D8 should be used for 16-bit peripherals.

BOOT LOADING

Standalone Mode (MMAP = BMODE = 1)

Boot loading of the ADMC401 may occur in a number of different ways and is determined by the state of both the MMAP and BMODE pins. If both MMAP and BMODE are tied to V_{DD} (HI), the ADMC401 is placed in the so-called *standalone mode* and execution starts from internal program memory ROM at address 0x0800 following a power-on or reset. This starts execution of the internal monitor function that first performs some initialization functions (including writing 0 to the three data memory wait state fields) and copies a default interrupt vector table to addresses 0x0000–0x005F of program memory RAM. The monitor program next clears Bit 4 of the MODECTRL register to connect the DR1A pin to the internal data receive port (DR1) of SPORT1. In addition, Bit 5 of the MODECTRL register is set. This connects the FL1 port of the DSP core to the RFS1/SROM pin to act as a reset for a serial memory device.

The monitor next attempts to boot load from an external Serial ROM (SROM) or Serial E^2PROM on SPORT1 using the three wire connection of Figure 15. This SROM or E^2PROM should be programmed with the protocol of the MAKEPROM utility provided with the Motion Control Debugger. The monitor program first toggles the RFS1/$\overline{SROM}$ pin of the ADMC401 to reset the serial memory device with the following code segment:

```
SROMRESET:    SET FL1;
              TOGGLE FL1;
              TOGGLE FL1;
              RTS;
```

If a properly programmed SROM or E^2PROM is connected to SPORT1, data is clocked synchronously into the ADMC401 at a rate of 1 Mb/s. Both internal and external program and data memory RAM can be loaded from the SROM/E^2PROM, up to the available capacity of the serial memory device. After the entire boot load is complete, program execution begins at address 0x0060. This is where the first instruction of the user code should be placed.

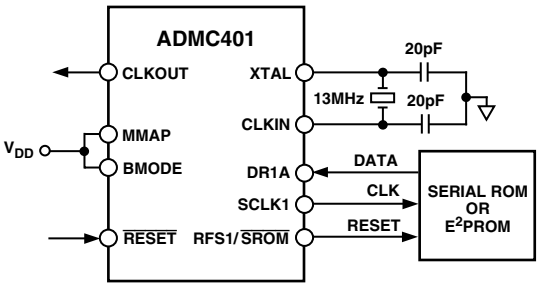

Figure 15. Basic System Configuration in Standalone Mode

If boot loading from an SROM or E^2PROM is unsuccessful, the monitor code reconfigures SPORT1 as a UART (setting both Bit 4 and Bit 5 of the MODECTRL register) and attempts to receive commands from an external device on this serial port using the DR1B pin. The monitor now waits for two bytes of information. These bytes are received asynchronously so that no clock is needed. The first byte is the autobaud byte and it is used to calculate the baud rate at which data is being received. This is known as the autobaud feature. The ADMC401 will automatically lock onto the baud rate of the external device if it is sent a byte of 0x70. The maximum baud rate that the ADMC401 will lock onto is 300 kb/s for a 26 MHz CLKOUT.

The second byte of information received is the header byte that uniquely identifies to the monitor which type of interface it is connected to. There are six different interfaces supported on the ADMC401. These includes:

- A UART boot loader such as from a Motorola 68HC11 communicating over its Serial Communications Interface (SCI) port.
- A synchronous slave boot loader (the clock is external).
- A synchronous master boot loader (the ADMC401 provides the clock).
- A UART debugger interface such as the *Motion Control Debugger* from Analog Devices. The monitor then processes commands received from the debugger over the UART interface.
- A synchronous master debugger interface.
- A synchronous slave debugger interface.

Detailed information on these software interfaces can be found in the "UART Boot Loader Protocol" and "UART Debugger Protocol" appendices of the ADMC401 *Developer's Reference Manual.*

Byte-Wide EPROM Boot Mode (MMAP = BMODE = 0)

If both the MMAP and BMODE pins are tied to GND, the ADMC401 operates in the so-called *EPROM Boot* mode. In this mode the entire internal program memory, or any portion of it, can be loaded from an external source using a boot sequence over the memory interface. To allow boot loading from inexpensive 8-bit wide EPROM devices, the processor loads data one byte at a time. The boot sequence can also be initiated after reset by software.

Boot memory is organized into eight pages, each of which is 8k bytes long. Every fourth byte of a page is an *empty* byte except for the first one, which contains the page length. Each set of three bytes between successive empty bytes contains one 24-bit instruction to be loaded into the internal PM RAM of the DSP.

The page length is read first and then bytes are loaded from the top of the page downwards. This causes shorter booting times for shorter pages. The length of the boot page is given as:

page length = (*number of* 24-*bit PM words*/8) – 1

That is, a page length of 0 causes the boot address generator to generate byte addresses for eight words that reside in 32 sequential EPROM locations.

A PROM splitter utility (SPL21), part of the *Motion Control Debugger* tool set, calculates the proper page length for your program and orders the bytes of your program according to the proper protocol. More detailed information about the use of this PROM splitter utility can be found in the "Booting from External EPROM with MMAP = BMODE = 0" chapter of the ADMC401's *Developer's Reference Manual.*

Following a reset, if both MMAP and BMODE are LO, the boot sequence always boot loads page 0. After reset, boot loading can occur under program control from any one of up to eight different boot pages. The boot page select field (BPAGE) in the memory mapped System Control Register specifies which boot page is to be loaded. To boot from a specific boot page, first set the BPAGE bits to the desired value and set the boot force bit (BFORCE) of the System Control Register to initiate a boot sequence.

The ADMC401 can boot its internal program memory from a single byte-wide CMOS EPROM such as the 27C64 or the 27C512. A low cost commodity-grade EPROM with an industry-standard access time can be used. The number of wait states for the boot memory access is selected in the BWAIT field of the System Control Register. This field can be set to any value from 0 to 7 to set the number of wait states. The default value for the BWAIT field is 7 so that seven wait states are inserted into the reset-initiated boot loading sequence.

Timing of the boot memory access is identical to that of external program memory or external data memory accesses, except that the active strobe is $\overline{\text{BMS}}$ rather than $\overline{\text{PMS}}$ or $\overline{\text{DMS}}$. To address eight pages of 8K bytes each, 16 address lines are needed. The least significant 14 bits are output on the 14-bit address bus (A13 to A0) while the most significant two bits are output on the 2 MSBs of the data bus (D23 and D22) during boot memory accesses. The data is read from the middle eight bits of the data bus (D15 to D8).

The development tools for the ADMC401 support the creation of EPROM target files capable of boot loading both internal and external program and data memory.

External Memory Mode (BMODE = 0, MMAP = 1)

In this mode, with BMODE tied to GND and MMAP tied to V_{DD}, the ADMC401 is placed in external memory mode and there is no boot loading. The effect of this mode is that the internal 2K bank of program memory RAM is relocated from the bottom of memory (starting at address 0x0000) to the top of the program memory space (at address 0x3800). In this mode, program execution starts at external memory address 0x0000, at which point the first instruction must be placed.

The mode in which BMODE = 1 and MMAP = 0 is not allowed on the ADMC401 and is an illegal state. The operation of the ADMC401 is neither guaranteed nor defined with BMODE = 1 and MMAP = 0.

BUS REQUEST/GRANT

The ADMC401 can relinquish control of the external data and address buses to an external device. The external device requests the bus by asserting (low) the bus request signal $\overline{\text{BR}}$. $\overline{\text{BR}}$ is an asynchronous input and if the ADMC401 is not performing an external access, it responds to the active $\overline{\text{BR}}$ input in the following processor cycle by:

- Three-stating the data and address buses and the $\overline{\text{PMS}}$, $\overline{\text{DMS}}$, $\overline{\text{BMS}}$, $\overline{\text{RD}}$ and $\overline{\text{WR}}$ output drivers.
- Asserting the bus grant ($\overline{\text{BG}}$) signal, and
- Halting program execution (unless Go Mode is enabled).

If Go Mode is enabled, (using the ENA G-MODE instruction) the ADMC401 continues to execute instructions from its internal memory. It will not halt program execution until it encounters an instruction that requires an external access, which includes an access to any motor control peripheral register. If Go Mode is not enabled, the ADMC401 always halts before granting the bus. The processor's internal state is not affected by granting the bus, and the serial ports remain active during a bus grant, whether or not the processor core halts.

If the ADMC401 is performing an external access when the $\overline{\text{BR}}$ signal is asserted, it will not grant the buses until the cycle after the access completes. The entire instruction does not need to be completed when the bus is granted. If a single instruction requires two external accesses, the bus will be granted between the two accesses. The second access is performed after $\overline{\text{BR}}$ is removed. When the $\overline{\text{BR}}$ input is released, the ADMC401 releases the $\overline{\text{BG}}$ signal, re-enables the output drivers and continues program execution from the point where it stopped. $\overline{\text{BG}}$ is always deasserted in the same cycle that the removal of $\overline{\text{BR}}$ is recognized.

The bus request feature operates at all times, including when the ADMC401 is booting and when $\overline{\text{RESET}}$ is active. During $\overline{\text{RESET}}$, $\overline{\text{BG}}$ is asserted in the same cycle that $\overline{\text{BR}}$ is recognized. During booting, the bus is granted after the completion of loading of the current byte (including any wait states). Using the bus request during booting is one way to bring the booting operation under control of a host computer.

The ADMC401 has an additional output, Bus Grant Hang, $\overline{\text{BGH}}$, which lets it operate in a multiprocessor system with a minimum number of wasted cycles. The $\overline{\text{BGH}}$ pin asserts when the ADMC401 is ready to execute an instruction but is stopped because the external bus is granted to another device. The other device can release the bus by deasserting bus request. Once the bus is released, the ADMC401 deasserts $\overline{\text{BG}}$ and $\overline{\text{BGH}}$ and executes the external access.

POWER-DOWN MODES

The ADMC401 includes a power-down feature that allows the device to enter a very low power dormant state through hardware or software control. In the power-down mode:

- Internal clocks are disabled
- Processor registers and memory contents are maintained
- Ability to recover from power-down in less than $100t_{CKI}$ cycles
- Interrupt support for *housekeeping* code before entering power-down and after recovering from power-down
- User-selectable power-up context

Entering Power-Down

The power-down sequence is initiated by applying a high-to-low transition on the $\overline{\text{PWD}}$ pin or by setting the power-down force control bit (PDFORCE) of the SPORT1 autobuffer/power-down control register. The DSP core then vectors to the non-maskable power-down interrupt vector at address 0x002C. Care must be taken to ensure that multiple power-down interrupts do not occur or else stack overflow may result. The interrupt service routine at address 0x002C can be used to execute any number of housekeeping instructions prior to the processor entering the power-down mode. Typically, this is used to configure the power-down state, disable on-chip peripherals and clear pending interrupts. The DSP subsequently enters the power-down mode when it executes the IDLE instruction (while $\overline{\text{PWD}}$ is asserted). The processor may take either one or two cycles to power down, depending on internal clock states during execution of the IDLE instruction. All register and memory contents are maintained in power-down. Also, all active outputs are held in whatever state they are in before going into power-down. If an RTI instruction is executed before the IDLE instruction, the processor returns from the power-down interrupt and the power-down sequence is aborted.

Exiting Power-Down

The power-down mode can be exited with the use of the $\overline{\text{PWD}}$ pin or with the $\overline{\text{RESET}}$ pin. There are also several user-selectable modes for startup from power-down which specify a startup delay as well as specify the program flow after startup. This allows the program to resume from where it left off before power-down, or for the program context to be cleared. Applying a low-to-high transition on the $\overline{\text{PWD}}$ pin will take the processor out of power-down. The amount of time it takes for the processor to come out of power-down is controllable with the *delay startup from power-down* control bit (XTALDELAY, Bit 14 of the Power-Down Control Register or SPORT1 Autobuffer Control Register). If this bit is cleared, no additional delay over the quick startup (100 cycles) is introduced. If this bit is set, a delay of 4096 cycles is introduced.

The context for exiting power-down is set by Bit 12 (PUCR) of the Power-Down Control Register. If this bit is cleared, after exiting power-down the processor will continue to execute instructions following the IDLE instruction after the low-to-high transition on the $\overline{\text{PWD}}$ pin. When the RTI instruction is encountered in the interrupt service routine for the power-down, operation is returned to the main routine. If the PUCR bit is set, for a "clear context", the processor resumes operation from power-down by clearing the PC, STATUS, LOOP and CNTR registers. The IMASK and ASTAT registers are cleared and the SSTAT goes to 0x55. The processor starts execution at address 0x0000.

Active output pins retain their states during power-down. In addition, interrupts are latched and can be serviced if the ADMC401 exits power-down with PUCR = 0. It is possible to clock data into or out of the serial ports during power-down by supplying an external serial clock. Data clocked into the ADMC401 will remain in the RX registers. These activities cause additional power consumption.

If $\overline{\text{RESET}}$ is activated while the ADMC401 is in the power-down mode, power down is exited, and a normal Full System Reset Sequence is initiated, (which depends upon the settings of MMAP and BMODE for the boot method as usual). When exiting power-down with $\overline{\text{RESET}}$, the XTALDELAY control bit is ignored.

Startup Time After Power-Down

The time required to exit the power-down state depends on the method used to exit power-down. Unlike the standard ADSP-21xx products, the XTALDIS bit of the Power-Down Register has no effect on the ADMC401 so that it is not possible to avoid the power drain caused by the XTAL pin toggling. When the processor comes out of power-down by either the $\overline{\text{PWD}}$ or $\overline{\text{RESET}}$ pins, it will begin executing after a maximum startup time of 100 CLKIN cycles as long as the clock oscillator is stable and at the same frequency as before power-down.

If the external clock is unstable when the ADMC401 exits power-down, the XTALDELAY control bit can be used to insert an additional 4096 cycle delay into the startup time. This delay can only be inserted when the ADMC401 is brought out of power-down by the $\overline{\text{PWD}}$ pin.

If the processor is taken out of power-down by the $\overline{\text{RESET}}$ line, and the clock is stable and at the same frequency as before power-down, the $\overline{\text{RESET}}$ need only be held for five cycles.

The PWDACK Pin

The PWDACK pin is an output that indicates when the ADMC401 is in the power-down mode. This pin is driven high by the processor when it has powered down. It is driven low after the processor has completed the power-up sequence. A low level on the PWDACK pin also indicates that there is a valid CLKOUT signal and that instruction execution has begun.

When power-down is terminated with the $\overline{\text{RESET}}$ pin or a startup delay is selected, a low level on the PWDACK pin only indicates the start of oscillations on the CLKOUT pin. It will not necessarily indicate the start of instruction execution.

The state of PWDACK and also the CLKOUT signal is undefined during the first 100 cycles of the initial reset.

Using Power-Down as a Nonmaskable Interrupt

The power-down interrupt is never masked. It is possible to use this interrupt for other purposes, if desired. The ADMC401 does not go into power-down until the IDLE instruction is executed. If an RTI is executed instead, before an IDLE instruction, the processor returns from the power-down interrupt service outline and the power-down sequence is aborted.

THE ANALOG-TO-DIGITAL CONVERSION SYSTEM

OVERVIEW OF ADC SYSTEM

The ADMC401 contains a fast, high accuracy, multiple-input analog-to-digital conversion system with simultaneous sampling capabilities. This A/D conversion system permits the fast, accurate conversion of currents, voltages and other signals needed in high performance motor control systems. A functional block diagram of the entire ADC system is shown in Figure 16.

The ADC system permits up to eight dedicated analog inputs all to be converted in under 2 µs (at 26 MHz) through a single 12-bit pipeline flash ADC. The entire ADC system (including multiplexing and the sample and hold amplifiers) operates at a clock rate equal to a quarter of the DSP instruction rate. Analog input voltages of up to 4.0 V p-p can be converted. The input signals are divided into two banks of four signals each, with VIN0 to VIN3 making up one bank and VIN4 to VIN7 making up the second bank. There are also two dedicated inputs (ASHAN

and BSHAN) to the inverting terminal of the two sample and hold amplifiers (SHA) so that external signals can be correctly biased about the nominal operating range of the ADC.

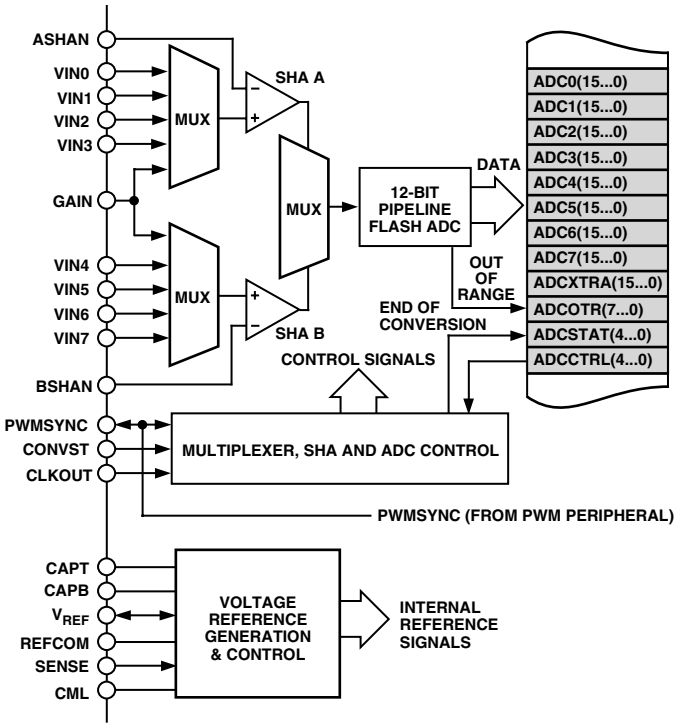

Figure 16. Functional Block Diagram of the ADC System of the ADMC401

The basic architecture of the ADC system consists of a four-stage pipeline architecture (the A/D core) with wideband input sample and hold amplifiers. Excluding the last stage, each stage of the pipeline consists of a low resolution flash A/D connected to a switched capacitor DAC and interstage residue amplifier (MDAC). The reside amplifier amplifies the difference between the reconstructed DAC output and the flash input for the next stage in the pipeline. The last stage of the pipeline simply consists of a flash A/D. The pipeline architecture allows a greater throughput rate at the expense of pipeline delay or latency. This means that while the converter is capable of capturing a new input sample every ADC clock cycle, it actually takes 3 1/2 ADC clock cycles for the conversion process of any input to be fully processed and appear at the output.

The ADC may operate in two basic conversion modes, *Simultaneous Sampling* or *Sequential Sampling*. The operating mode is selected by dedicated bits in the ADCCTRL register. In the *Simultaneous Sampling* mode, two analog inputs (one from each bank) are sampled simultaneously so that VIN0 and VIN4, VIN1 and VIN5, VIN2 and VIN6, VIN3 and VIN7 represent four pairs of simultaneously sampled inputs. In the alternative sequential operating mode, there is no simultaneous sampling, and the analog inputs are sampled and converted one after the other (i.e., VIN0 followed by VIN1 followed by VIN2, etc.). In this mode, successive analog inputs are sampled an ADC clock period (or four DSP clock cycles) apart.

The conversion sequence may be initiated either internally (synchronized to the PWM generation) or from an external event on the CONVST pin. In the default *Simultaneous Sampling* mode of operation, the internal control logic simultaneously samples the first pair of input signals (VIN0 and VIN4) following the convert start command. Subsequently, these inputs are multiplexed into the 12-bit analog-to-digital converter. After a delay of two ADC clock cycles, the second pair of analog inputs (VIN1 and VIN5) are sampled simultaneously and then multiplexed into the ADC. This process continues until all four pairs of analog inputs have been sampled and converted. As the conversion for a given analog input channel is completed, the corresponding digital number is written to a dedicated 16-bit, twos complement, left-aligned register that is memory mapped to the data memory space of the DSP core. The ADC data register ADC0 stores the conversion result for the signal on VIN0, etc.

Following the end of conversion of each pair of analog inputs, a dedicated bit is set in the ADCSTAT register. The result of this highly efficient pipelined structure is that all eight ADC data registers will contain valid conversion results less than 2 µs (at 26 MHz) after the convert start command. At this point a dedicated ADC interrupt will be generated. Alternatively, if data is required sooner, the ADCSTAT register can be polled to detect when a given pair of analog inputs have been successfully converted, except in *Sequential Sampling* mode.

Once the conversion sequence has been completed and all eight ADC data registers have been updated, the entire ADC structure automatically reverts to the *Single Channel* mode and continuously converts the analog input on the VIN0 pin. The results of this conversion are placed in the additional ADCXTRA register and are updated once every ADC clock cycle. This feature could be used to continuously monitor a single analog input on the VIN0 pin.

There are two additional modes of operation of the ADC system that may be used for offset and gain calibration of the entire system. In the *Offset Calibration* mode, all analog inputs (VIN0 to VIN7, GAIN, ASHAN and BSHAN) are disconnected from the inputs to the sample and hold amplifiers. Instead, both terminals of each sample and hold amplifiers are connected together and to the voltage reference. Following a conversion sequence, the data in the ADC data register can be taken as a measure of any offset in the sample and hold amplifiers and ADC. Additionally, in the *Gain Calibration* mode, the dedicated analog input GAIN is applied to the noninverting terminal of both sample and hold amplifiers. Any number of precise external voltages can be applied to this pin to measure and correct for any gain errors, if required.

Along with each data output from the A/D converter, an Out-of-Range (OTR) bit is set if the signal exceeds the permissible input voltage span. In normal conversion, the eight OTR bits for the eight analog inputs are stored in the ADCOTR register, with one bit for each analog input. The OTR bit for the ADCXTRA register is stored in the ADCSTAT register.

The ADC may use either an internally generated 2.0 V precision reference voltage or an externally supplied reference voltage level at the V_{REF} pin. The operating mode is selected by the connection of the SENSE pin.

CONVERT START COMMAND

The analog-to-digital conversion process of the ADMC401 may be started by either an internal or an external command. Bit 0 of the ADCCTRL register determines whether internal or external convert start mode is enabled. If Bit 0 of the ADCCTRL register is cleared, internal convert start mode is selected, and the ADC conversion process is started on the rising edge of the PWMSYNC signal. This results in one conversion sequence per PWM switching period (at the start of each period) when the PWM generation unit operates in the single update mode. In the double update operating mode, there are two conversion sequences per PWM switching period (one at the start and one in the middle of each period). In internal convert start mode, in order to ensure correct synchronization and jitter-free operation, it is essential that the value written to the PWMTM register be a multiple of four. In other words, the two LSBs of the value written to the PWMTM register must both be 0.

If Bit 0 of the ADCCTRL register is set, external convert start mode is selected. In this mode, the conversion process is started on the occurrence of a rising edge on the CONVST pin. Additionally, the start of conversion can be placed under software control by externally connecting one of the programmable input/output (PIO) lines to the CONVST pin and generating a rising edge by writing to the appropriate bit of the PIODATA register.

By default, following reset, Bit 0 of the ADCCTRL register is cleared so that internal convert start mode is selected.

ADC CLOCK SIGNALS

The ADC consists of a pipeline flash architecture and is clocked at a quarter of the DSP instruction rate. All of the timing of the ADC system (including control of the multiplexers and sample and hold amplifiers) is regulated by this clock signal and it determines the total conversion time for all of the channels as well as the delay between sampling of successive pairs of analog inputs. The ADC clock rate is internally fixed and may not be changed. The period of the ADC clock, t_{CKADC} is related to the DSP CLKOUT period by:

$$t_{CKADC} = 4 \times t_{CK}$$

A DSP rate of 26 MHz corresponds to a t_{CKADC} of approximately 154 ns.

ANALOG INPUT CONFIGURATION AND OVERVIEW

Figure 17 is a simplified model of the ADC input structure for one channel (VIN0) of the ADC system of the ADMC401. This model applies to all eight input channels. The internal multiplexers are used to switch the various analog inputs to the A/D converter. For analog inputs VIN0 to VIN3, there is a single common terminal (ASHAN) that is the inverting input to the internal differential sample and hold amplifier. For the input signals, VIN4 to VIN7, the equivalent input is BSHAN. The value V_{REF} (internally generated voltage reference or externally applied voltage reference on the V_{REF} pin) defines the maximum input voltage to the A/D core. The minimum input voltage to the A/D core is automatically defined as $-V_{REF}$.

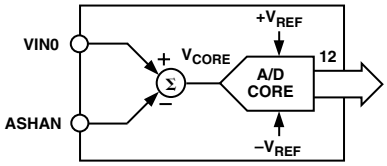

Figure 17. Equivalent Functional Input Circuit of ADC System

The dc voltage on the V_{REF} pin sets the common-mode voltage of the A/D converter of the ADMC401. For example, when using the internal 2.0 V reference, the input level will also be centered about 2.0 V. The ADC inputs of the ADMC401 can be configured for single ended operation, where the inverting terminals (ASHAN and BSHAN) are connected directly to the reference voltage level, and the analog inputs (VIN0 to VIN7) are driven by analog signals with a 4.0 V p-p range. The VIN0 to VIN7 inputs are unipolar so that when operating from the internal 2.0 V reference, these signals can range from 0 V to 4 V. The recommended single-ended input configuration for a single analog input channel of the ADMC401 is shown in Figure 18. The input to the A/D converter must be driven by an operational amplifier with sufficient drive strength so that the A/D performance is not degraded. Sufficient drive strength is the ability to drive a load of 6 pF static and 4 pF switched from ground (capacitive) to settle within ±1.0 mV within 70 ns. In Figure 18, the operational amplifier is shown configured as a simple noninverting input buffer. Of course, the operational amplifier stage could also be used to implement any necessary level shifting and/or filtering of the input signal.

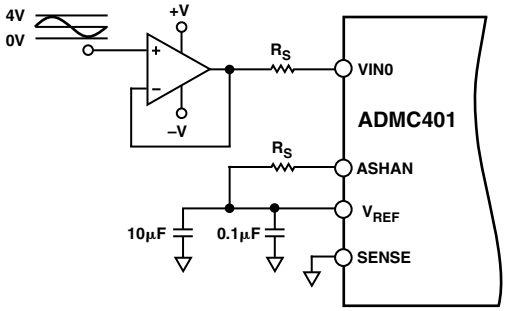

Figure 18. Typical Single-Ended Input Configuration for ADMC401

From Figure 17, it is clear that the input to the A/D core is simply given by:

$$V_{CORE} = VIN0 - ASHAN$$

which must satisfy the condition:

$$-V_{REF} \le V_{CORE} \le V_{REF}$$

where V_{REF} is the voltage at the V_{REF} pin of the ADMC401 (either internally generated or externally supplied). There is an additional limit placed on the valid operating range for the VIN0 and ASHAN inputs that is bounded by the power supply of the ADMC401:

$$AV_{SS} - 0.3\ V \le VIN0 \le AV_{DD} + 0.3\ V$$

$$AV_{SS} - 0.3\ V \le ASHAN \le AV_{DD} + 0.3\ V$$

Table II. Digital Data Format of ADC

VIN0 (V)	ASHAN (V)	VCORE (V)	Digital Data (Hex)	Digital Data (Binary)	OTR
$\geq 2 \times V_{REF}$	V_{REF}	$\geq +V_{REF}$	0x7FF0	0111 1111 1111 0000	1
$2 \times V_{REF} - 1$ LSB	V_{REF}	$V_{REF} - 1$ LSB	0x7FF0	0111 1111 1111 0000	0
$2 \times V_{REF} - 2$ LSB	V_{REF}	$V_{REF} - 2$ LSB	0x7FE0	0111 1111 1110 0000	0
$V_{REF} + 1$ LSB	V_{REF}	0 + 1 LSB	0x0010	0000 0000 0001 0000	0
V_{REF}	V_{REF}	0	0x0000	0000 0000 0000 0000	0
$V_{REF} - 1$ LSB	V_{REF}	0 – 1 LSB	0xFFF0	1111 1111 1111 0000	0
0 + 1 LSB	V_{REF}	$-V_{REF} + 1$ LSB	0x8010	1000 0000 0001 0000	0
0	V_{REF}	$-V_{REF}$	0x8000	1000 0000 0000 0000	0
< 0	V_{REF}	$< -V_{REF}$	0x8000	1000 0000 0000 0000	1

where AV_{SS} is nominally at 0 V and AV_{DD} is nominally at +5 V. Of course, identical input constraints and requirements apply for the other analog inputs VIN1 to VIN7 as well as the BSHAN and GAIN inputs.

ADC DATA FORMAT AND OUT-OF-RANGE DETECTION

The digital data from the A/D core that is stored in the dedicated, memory mapped ADC registers (ADC0 to ADC7 as well as ADCXTRA) is stored as left-aligned, twos complement data. The output data format for normal operation in the single-ended configuration of Figure 18 is given in Table II for one analog input (VIN0 and ASHAN). Naturally, identical conditions apply for all other analog inputs.

As well as the 12-bit data word, the A/D core produces an out-of-range bit that is set when the analog input to the core exceeds the allowable range ($-V_{REF}$ to $+V_{REF}$). There is a dedicated 8-bit ADCOTR register that stores the eight OTR bits for the A/D conversions of the signals on the VIN0 to VIN7 inputs. There is a single bit for each analog input; if Bit 0 of the ADCOTR register is set, the VIN0 input has exceeded the permissible input range. Therefore, following a complete conversion cycle, if this register is zero, no signal has exceeded the input range. If the OTR bit for a given analog input is set, it is possible to determine if the signal has overranged (less than $2 \times V_{REF}$) or underranged (less than 0 V) by monitoring the MSB of the data word and the OTR bit, as outlined in Table III.

Table III. Out-of-Range Truth Table

OTR	MSB	Condition
0	0	In Range: $V_{REF} \leq VIN0 \leq 2 \times V_{REF} - 1\ LSB$
0	1	In Range: $0 \leq VIN0 \leq V_{REF} - 1\ LSB$
1	0	Overrange: $VIN0 \geq 2 \times V_{REF}$
1	1	Underrange: $VIN0 < 0$

ADC OPERATING MODES

The A/D conversion system of the ADMC401 may be configured to operate in four basic modes that are selected by Bits 3 and 4 of the ADCCTRL register. Following reset, the default setting is that both of these bits are cleared and *Simultaneous Sampling* mode is selected.

- Simultaneous Sampling Mode (ADCCTRL(4 . . . 3) = 00)
- Sequential Sampling Mode (ADCCTRL(4 . . . 3) = 01)
- Offset Calibration Mode (ADCCTRL(4 . . . 3) = 10)
- Gain Calibration Mode (ADCCTRL(4 . . . 3) = 11)

Simultaneous Sampling Mode

This operating mode is selected by clearing both Bits 3 and 4 of the ADCCTRL register. In this mode, the eight analog inputs are sampled as four pairs of simultaneously sampled inputs with VIN0 and VIN4 being the first pair of sampled inputs, followed by VIN1 and VIN5, followed by VIN2 and VIN6, followed by VIN3 and VIN7. Following the rising edge of the convert start command (either internally or externally derived), the internal control logic simultaneously samples the VIN0 and VIN4 analog inputs using the dual internal sample and hold amplifiers. The internal control logic subsequently multiplexes these two signals into the A/D core of the ADMC401. The conversion of each signal requires 3 1/2 ADC clock cycles. Following the hold operation, the VIN0 input is applied to the first stage of the pipeline during the next ADC clock cycle. For the next clock cycle, the VIN0 signal is applied to the second stage of the pipeline and the VIN4 input is applied to the first stage of this pipeline. In this clock cycle, the second pair of inputs is also simultaneously sampled. This process continues to feed signals into the A/D core until all eight channels have been converted. The timing of this conversion sequence is shown in Figure 19.

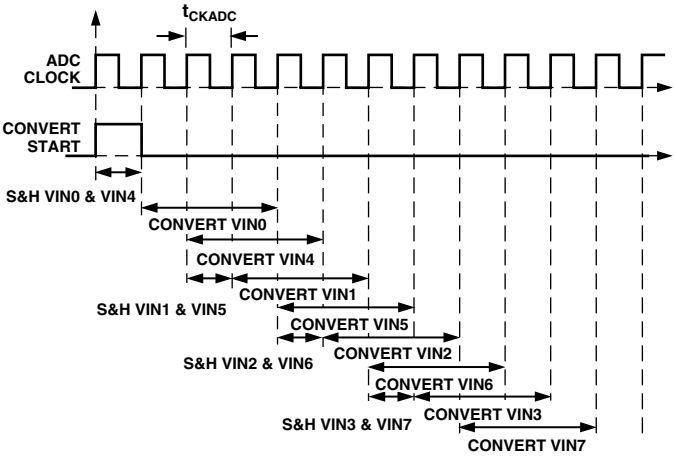

Figure 19. ADC Timing for Simultaneous Sampling Operating Mode

In this operating mode, there is a unique status bit in the ADCSTAT register that is set as soon as data is available for each pair of simultaneously sampled signals. Bit 0 of the ADCSTAT is set as soon as the data in both the ADC0 and ADC4 registers is valid, Bit 1 is set as soon as the data in ADC1 and ADC5 is valid, Bit 2 is set as soon as the data in ADC2 and

ADC6 is valid and Bit 3 is set when the data in ADC3 and ADC7 is valid. At the start of the next conversion sequence, all bits of the ADCSTAT register are cleared. Additionally, at the end of the complete conversion sequence (when the data in the ADC7 register is valid), a dedicated ADC interrupt is generated. This interrupt can be masked and controlled by the PIC block.

Depending on initial synchronization delays, the worst case total conversion time (defined as the duration from the rising edge of the convert start command to the generation of the ADC interrupt) for all eight channels is:

$$t_{CONV} = 49 \times t_{CK}$$

which corresponds to 1.88 µs for a DSP instruction rate of 26 MHz. Additionally, in this operating mode, the time delay between sampling of successive pairs of analog inputs is $8t_{CK}$ or 308 ns (at 26 MHz).

Sequential Sampling Mode

This operating mode is selected by setting Bit 3 and clearing Bit 4 of the ADCCTRL register. In this operating mode, simultaneous sampling is abandoned and the A/D conversion sequence samples each analog input sequentially. Therefore, in the first ADC clock period, VIN0 is sampled and held by the first sample and hold amplifier. In the second clock period, the held sample of VIN0 is applied to the first stage of the ADC pipeline and the VIN1 signal is sampled. This process continues until each of the analog inputs has been sequentially sampled and converted (i.e., VIN0 followed by VIN1 followed by VIN2, etc.). In this operating mode, the total conversion time is the same as the *Simultaneous Sampling* mode. However, successive channels are sampled at $4t_{CK}$ (or 154 ns at 26 MHz) intervals. In this mode, Bits 0 to 3 of the ADCSTAT register are all set together when all eight conversions are complete. The interrupt is generated, as before, when the data in the ADC7 register is valid.

Offset Calibration Mode

In order to maintain the high accuracy of the ADC system of the ADMC401, it may be necessary to measure and compensate for any intrinsic offset and/or gain errors in the A/D conversion system. The *Offset Calibration* mode, which is selected by setting Bit 4 and clearing Bit 3 of the ADCCTRL register, is intended to be used for measuring any offsets in the sample and hold amplifiers. When this mode is selected, all analog inputs (VIN0 to VIN7, ASHAN and BSHAN) are disconnected from the inputs to the sample and hold amplifiers, and the SHA inputs are internally connected together and to the reference voltage (at the V_{REF} pin). Since these connections are in effect only during the conversion sequence, a complete conversion sequence must be initiated. Following the end of conversion, the data in the ADC0 to ADC3 registers may be taken as four separate measurements of the offset of the first sample and hold amplifier. Similarly, the data in the ADC4 to ADC7 registers may be taken as measurements of the offset associated with the second sample and hold amplifier. These data values could be averaged to obtain an offset value for each sample and hold amplifier that could be stored and used to compensate all future measurements. The end of conversion status bits are updated and the interrupt is generated in a manner identical to the *Simultaneous Sampling* mode.

Gain Calibration Mode

It may be desirable to measure and compensate for any gain errors associated with the A/D conversion process across the entire input voltage span of the A/D system. The *Gain Calibration* mode, selected by setting both Bits 3 and 4 of the ADCCTRL register, is designed to offer significant user flexibility in determining the amount of gain compensation that may be required. In this mode the dedicated GAIN input pin is internally connected directly to the noninverting input of each sample and hold amplifier. The user may apply different precise analog voltages across the input voltage span to this pin to measure gain errors over the operating range.

A complete conversion sequence for each different GAIN input must be initiated. Following the end of conversion, the data in the ADC0 to ADC3 registers may be used to calculate four separate measurements of the gain error of the first sample and hold amplifier. Similarly, the data in the ADC4 to ADC7 registers may be used to calculate the gain associated with the second sample and hold amplifier. These data values could be averaged to obtain gain error values for each sample and hold amplifier that could be stored and used to compensate all future measurements. The end of conversion status bits are updated and the interrupt is generated in a manner identical to the *Simultaneous Sampling* mode.

ADCXTRA REGISTER

Following the end of conversion sequence in any of the four operating modes, the A/D system reverts to its *Single Channel* mode. In this configuration, the multiplexers are set such that the VIN0 input is continuously sampled and converted. The results of these conversions are placed in the dedicated ADCXTRA register that is updated with the results of a new conversion every ADC clock period (or 154 ns at 26 MHz). This feature permits the continuous tracking of a single analog input, if required. The OTR bit for these conversions is placed in Bit 4 of the ADCSTAT register. No interrupt is generated following these conversions and no other status bits are generated. The ADCXTRA register is not updated during the conversion sequence of any of the four operating modes.

VOLTAGE REFERENCE OPERATION

The ADMC401 contains an onboard bandgap reference that can be used to provide a precise 2.0 V output for use by the A/D system and externally on the V_{REF} pin for biasing and level–shifting functions. Additionally, the ADMC401 may be configured to operate with an external reference applied to the V_{REF} pin. The SENSE pin is used to select between internal and external references.

The actual reference voltages used by the internal ADC circuitry of the ADMC401 appear on the CAPT and CAPB pins. For correct operation of the internal voltage reference generation circuitry, either with internal or external reference, it is necessary to add a capacitor network between these pins, as shown in Figure 20. A 10 µF tantalum capacitor in parallel with a 0.1 µF ceramic is recommended as well as two 0.1 µF capacitors to analog ground. The internal bias circuitry may take up to 15 ms after power-up to settle. Any ADC conversions performed prior to this may not be as accurate as possible. The start-up time may be evaluated by measuring how long it takes for the voltage difference between CAPT and CAPB to settle to V_{REF}. Additionally, a 0.1 µF ceramic capacitor must be connected between the CML pin and analog ground. Finally, the V_{REF} pin should be decoupled to analog ground by a 10 µF tantalum capacitor in parallel with a 0.1 µF ceramic capacitor.

The SENSE pin controls whether the A/D system operates with an internal or an external reference. For operation with the internal reference, the SENSE pin should be tied to the REFCOM pin. In this mode, the internally derived 2 V voltage reference appears at the V_{REF} pin. To operate with an external voltage reference, the SENSE pin should be tied to the AV_{DD} pin and the external voltage reference may be applied at the V_{REF} pin.

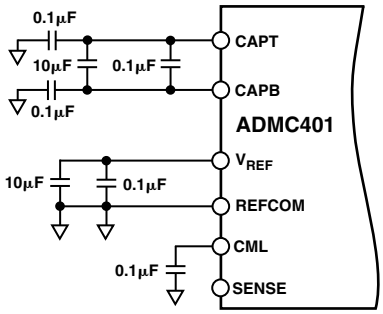

Figure 20. Recommended Capacitor Decoupling Networks for the ADMC401

OPTIMIZING ADC PERFORMANCE

The optimum noise and dc linearity performance is achieved with the largest input signal voltage span (i.e., 4 V input span) and with matching impedance in series with each of the analog inputs (VIN0 to VIN7, ASHAN and BSHAN). Additionally, the operational amplifier must exhibit source impedance that is both low and resistive, up to and beyond the sampling frequency. When a capacitive load is switched onto the output of the operational amplifier, the output will momentarily drop, due to its effective output impedance. As the output recovers, ringing may occur. To remedy this situation, a series resistor can be inserted between the op amp output and the ADC input (R_S as shown in Figure 18). Recommended configurations include using the OP27 amplifiers with an R_S of 20 Ω. Alternative recommended op amps are the AD8051 and AD8054.

Figure 18 shows ASHAN driven by the internally generated reference voltage at V_{REF}. When driving ASHAN with an internally generated V_{REF}, better performance will result if the driving impedance of ASHAN matches the driving impedance of the other analog inputs. This can be implemented with the addition of a second amplifier to Figure 18, between V_{REF} and ASHAN, to match the amplifier on VIN0.

For noise sensitive applications, it may also be beneficial to add some shunt capacitance between the inputs (VIN0 and ASHAN of Figure 18) and analog ground. Since this additional capacitance combines with the equivalent input capacitance of the analog inputs, a lower series resistance may be possible. The input RC combination also provides some antialiasing filtering on the analog inputs. To optimize performance when noise is the primary consideration, increase the shunt capacitance as much as the transient response of the input signal will allow. Increasing the capacitance too much may adversely affect the op amp's settling time, frequency response and distortion performance.

ADC REGISTERS

The configuration and structure of the ADC registers is described at the end of this data sheet.

THE PWM CONTROLLER

OVERVIEW

The PWM generator block of the ADMC401 is a flexible, programmable, three-phase PWM waveform generator that can be programmed to generate the required switching patterns to drive a three-phase voltage source inverter for ac induction (ACIM) or permanent magnet synchronous (PMSM) motor control. In addition, the PWM block contains special functions that considerably simplify the generation of the required PWM switching patterns for control of the electronically commutated motor (ECM) or brushless dc motor (BDCM). A special mode for switched reluctance motors (SRM) exists as well, enabled by a dedicated pin.

The PWM generator produces three pairs of PWM signals on the six PWM output pins (AH, AL, BH, BL, CH and CL). The six PWM output signals consist of three high side drive signals (AH, BH and CH) and three low side drive signals (AL, BL and CL). The polarity of the generated PWM signals may be programmed by the PWMPOL pin, so that either active HI or active LO PWM patterns can be produced by the ADMC401. The switching frequency, dead time and minimum pulsewidths of the generated PWM patterns are programmable using respectively, the PWMTM, PWMDT and PWMPD registers. In addition, three duty-cycle control registers (PWMCHA, PWMCHB and PWMCHC) directly control the duty cycles of the three pairs of PWM signals.

Each of the six PWM output signals can be enabled or disabled by separate output enable bits of the PWMSEG register. In addition, three control bits of the PWMSEG register permit crossover of the two signals of a PWM pair for easy control of ECM or BDCM. In crossover mode, the PWM signal destined for the high side switch is diverted to the complementary low-side output and the signal destined for the low side switch is diverted to the corresponding high side output signal. In addition to ease of use of the PWM controller for ECM or BDCM, this crossover mode can also be used to transition the PWM signals into the overmodulation range with relative ease.

In many applications, there is a need to provide an isolation barrier in the gate-drive circuits that turn on the power devices of the inverter. In general, there are two common isolation techniques, optical isolation using opto-isolators and transformer isolation using pulse transformers. The PWM controller of the ADMC401 permits mixing of the output PWM signals with a high-frequency chopping signal to permit easy interface to such pulse transformers. The features of this gate-drive chopping mode can be controlled by the PWMGATE register. There is an 8-bit value within the PWMGATE register that directly controls the chopping frequency. In addition, high frequency chopping can be independently enabled for the high side and the low side outputs using separate control bits in the PWMGATE register. Also, all PWM outputs have sufficient sink and source capability to directly drive most opto-isolators.

The PWM generator is capable of operating in two distinct modes, single update mode or double update mode. In single update mode the duty cycle values are programmable only once per PWM period, so that the resultant PWM patterns are symmetrical about the midpoint of the PWM period. In the double update mode, a second updating of the PWM registers is implemented at the midpoint of the PWM period. In this mode, it is possible to produce asymmetrical PWM patterns that produce

lower harmonic distortion in three-phase PWM inverters. This technique also permits closed loop controllers to change the average voltage applied to the machine windings at a faster rate and so permits faster closed loop bandwidths to be achieved. The operating mode of the PWM block (single or double update mode) is selected by a control bit in MODECTRL register.

The PWM generator of the ADMC401 also provides an output pulse on the PWMSYNC pin, which is synchronized to the PWM switching frequency. In single update mode a PWMSYNC pulse is produced at the start of each PWM period. In double update mode, an additional PWMSYNC pulse is produced at the mid-point of each PWM period. The width of the PWMSYNC pulse is programmable through the PWMSYNCWT register.

The PWM signals produced by the ADMC401 can be shut off in a number of different ways. First, there is a dedicated asynchronous PWM shutdown pin, $\overline{\text{PWMTRIP}}$, that, when brought LO, instantaneously places all six PWM outputs in the OFF state (as determined by the state of the PWMPOL pin). In addition, each of the PIO lines of the ADMC401 (PIO0 to PIO11) can be configured to act as an additional PWM shutdown. By setting the appropriate bit in the PIOPWM register, the corresponding PIO line acts as an asynchronous PWM shutdown source in a manner identical to the $\overline{\text{PWMTRIP}}$ pin. These two hardware shutdown mechanisms are asynchronous so that the associated PWM disable circuitry does not go through any clocked logic, thereby ensuring correct PWM shutdown even in the event of a loss of the DSP clock. In addition to the hardware shutdown features, the PWM system may be shut down in software by writing to the PWMSWT register.

Status information about the PWM system of the ADMC401 is available to the user in the SYSSTAT register. In particular, the state of the $\overline{\text{PWMTRIP}}$ and PWMPOL pins is available, as well as status bits that indicates whether operation is in the first half or the second half of the PWM period.

A functional block diagram of the PWM controller is shown in Figure 21. The generation of the six output PWM signals on pins AH to CL is controlled by four important blocks:

- The Three-Phase PWM Timing Unit, which is the core of the PWM controller, generates three pairs of complemented and dead time adjusted center based PWM signals.
- The Output Control Unit allows the redirection of the outputs of the Three-Phase Timing Unit for each channel to either the high side or the low side output. In addition, the Output Control Unit allows individual enabling/disabling of each of the six PWM output signals.
- The Gate Drive Unit provides the correct polarity output PWM signals based on the state of the PWMPOL pin. The Gate Drive Unit also permits the generation of the high-frequency chopping frequency and its subsequent mixing with the PWM signals.
- The PWM Shutdown Controller takes care of the various PWM shutdown modes (via the $\overline{\text{PWMTRIP}}$ pin, the PIO lines or the PWMSWT register) and generates the correct $\overline{\text{RESET}}$ signal for the Timing Unit.

The PWM controller is driven by a clock at the same frequency as the DSP instruction rate, t_{CK} and is capable of generating two interrupts to the DSP core. One interrupt is generated on the occurrence of a rising edge of the PWMSYNC pulse and the other is generated on the occurrence of any PWM shutdown action.

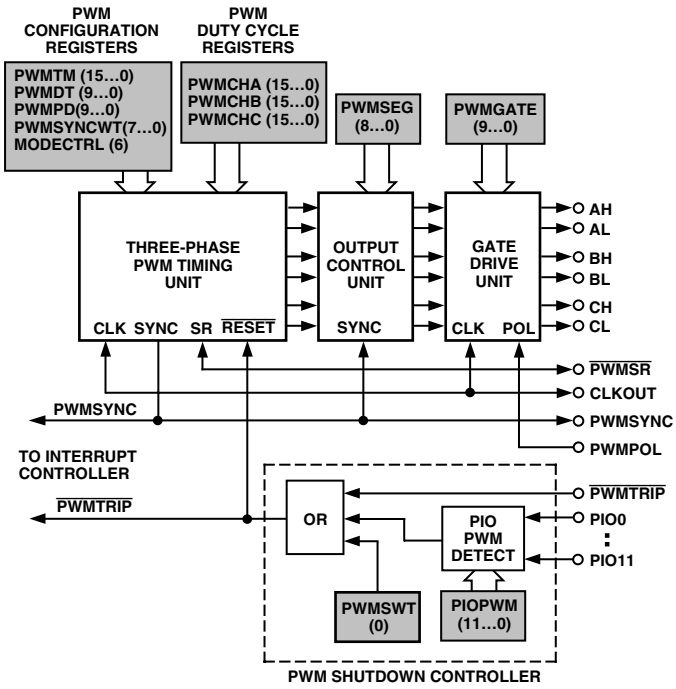

Figure 21. Overview of the ADMC401 PWM Controller

THREE-PHASE TIMING UNIT

The 16-bit three-phase timing unit is the core of the PWM controller and produces three pairs of pulsewidth modulated signals with high resolution and minimal processor overhead. The outputs of this timing unit are active LO such that a low level is interpreted as a command to turn ON the associated power device. There are four main configuration registers (PWMTM, PWMDT, PWMPD and PWMSYNCWT) that determine the fundamental characteristics of the PWM outputs. In addition, the operating mode of the PWM (single or double update mode) is selected by Bit 6 of the MODECTRL register. These registers, in conjunction with the three 16-bit duty cycle registers (PWMCHA, PWMCHB and PWMCHC), control the output of the three-phase timing unit.

PWM Switching Frequency, PWMTM Register

The PWM switching frequency is controlled by the 16-bit PWM period register, PWMTM. The fundamental timing unit of the PWM controller is t_{CK} (DSP instruction rate). Therefore, for a 26 MHz CLKOUT, the fundamental time increment is 38.5 ns. The value written to the PWMTM register is effectively the number of t_{CK} clock increments in half a PWM period. The required PWMTM value as a function of the desired PWM switching frequency (f_{PWM}) is given by:

$$PWMTM = \frac{f_{CLKOUT}}{2 \times f_{PWM}} = \frac{f_{CLKIN}}{f_{PWM}}$$

Therefore, the PWM switching period, T_s, can be written as:

$$T_S = 2 \times PWMTM \times t_{CK}$$

For example, for a 26 MHz CLKOUT and a desired PWM switching frequency of 10 kHz (T_S = 100 µs), the correct value to load into the PWMTM register is:

$$PWMTM = \frac{26\times10^6}{2\times10\times10^3} = 1300$$

The largest value that can be written to the 16-bit PWMTM register is 0xFFFF = 65,535, which corresponds to a minimum PWM switching frequency of:

$$f_{PWM,\,MIN} = \frac{26\times10^6}{2\times65{,}535} = 198\ Hz$$

PWM Switching Dead Time, PWMDT Register

The second important parameter that must be set up in the initial configuration of the PWM block is the switching dead time. This is a short delay time introduced between turning off one PWM signal (say AH) and turning on the complementary signal, AL. This short time delay is introduced to permit the power switch being turned off (AH in this case) to completely recover its blocking capability before the complementary switch is turned on. This time delay prevents a potentially destructive short-circuit condition from developing across the dc link capacitor of a typical voltage source inverter.

The dead time is controlled by the 10-bit PWMDT register. There is one dead time register that controls the dead time inserted into the three pairs of PWM output signals. The dead time, T_D, is related to the value in the PWMDT register by:

$$T_D = PWMDT \times 2 \times t_{CK}$$

Therefore, for a 26 MHz CLKOUT, a *PWMDT* value of 0x00A (= 10) introduces a 770 ns delay between the turn-off on any PWM signal (say AH) and the turn-on of its complementary signal (AL). The amount of the dead time can therefore be programmed in increments of $2t_{CK}$ (or 77 ns for a 26 MHz CLKOUT). The PWMDT register is a 10-bit register so that its maximum value is 0x3FF (= 1023) corresponding to a maximum programmed dead time of:

$$T_{D,\,MAX} = 1023 \times 2 \times t_{CK} = 1023 \times 2 \times 38.5 \times 10^{-9} = 78.8\ \mu s$$

for a CLKOUT rate of 26 MHz. Obviously, the dead time can be programmed to be zero by writing 0 to the PWMDT register.

PWM Operating Mode, MODECTRL and SYSSTAT Registers

The PWM controller of the ADMC401 can operate in two distinct modes; single update mode and double update mode. The operating mode of the PWM controller is determined by the state of Bit 6 of the MODECTRL register. If this bit is cleared, the PWM operates in the single update mode. Setting Bit 6 places the PWM in the double update mode. By default, following reset, Bit 6 of the MODECTRL register is cleared so that the default operating mode is in single update mode.

In single update mode, a single PWMSYNC pulse is produced in each PWM period. The rising edge of this signal marks the start of a new PWM cycle and is used to latch new values from the PWM configuration registers (PWMTM, PWMDT, PWMPD and PWMSYNCWT) and the PWM duty cycle registers (PWMCHA, PWMCHB and PWMCHC) into the three-phase timing unit. In addition, the PWMSEG register is also latched into the output control unit on the rising edge of the PWMSYNC pulse. In effect, this means that the characteristics and resultant duty cycles of the PWM signals can be updated only once per PWM period at the start of each cycle. The result is that PWM patterns that are symmetrical about the midpoint of the switching period are produced.

In double update mode, an additional PWMSYNC pulse is produced at the midpoint of each PWM period. The rising edge of this new PWMSYNC pulse is again used to latch new values of the PWM configuration registers, duty cycle registers and the PWMSEG register. As a result it is possible to alter the characteristics (switching frequency, dead time, minimum pulsewidth and PWMSYNC pulsewidth) as well as the output duty cycles at the midpoint of each PWM cycle. Consequently, it is possible with double update mode to produce PWM switching patterns that are not symmetrical about the midpoint of the period (asymmetrical PWM patterns).

In the double update mode, it may be necessary to know whether operation at any point in time is in either the first half or the second half of the PWM cycle. This information is provided by Bit 3 of the SYSSTAT register, which is cleared during operation in the first half of each PWM period (between the rising edge of the original PWMSYNC pulse and the rising edge of the new PWMSYNC pulse introduced in double update mode). Bit 3 of the SYSSTAT register is set during operation in the second half of each PWM period. This status bit allows the user to make a determination of the particular half-cycle during implementation of the PWMSYNC interrupt service routine, if required.

The advantage of the double update mode is that lower harmonic voltages can be produced by the PWM process and faster control bandwidths are possible. However, for a given PWM switching frequency, the PWMSYNC pulses occur at twice the rate in the double update mode. Since new duty cycle values must be computed in each PWMSYNC interrupt service routine, there is a larger computational burden on the DSP in the double update mode. Alternatively, the same PWM update rate may be maintained at half the switching frequency to give lower switching losses.

Width of the PWMSYNC Pulse, PWMSYNCWT Register

The PWM controller of the ADMC401 produces an output PWM synchronization pulse at a rate equal to the PWM switching frequency in single update mode and at twice the PWM frequency in the double update mode. This pulse is available for external use at the PWMSYNC pin. The width of this PWMSYNC pulse is programmable by the 8-bit read/write PWMSYNCWT register. The width of the PWMSYNC pulse, $T_{PWMSYNC}$, is given by:

$$T_{PWMSYNC} = t_{CK} \times \left(PWMSYNCWT + 1\right)$$

so that the width of the pulse is programmable from t_{CK} to 256 × t_{CK} (corresponding to 38.5 ns to 9.85 µs for a CLKOUT rate of 26 MHz). Following a reset, the PWMSYNCWT register contains 0x27 (= 39) so that the default PWMSYNC width is 1.54 µs, again for a 26 MHz CLKOUT.

PWM Duty Cycles, PWMCHA, PWMCHB, PWMCHC Registers

The duty cycles of the six PWM output signals on Pins AH to CL are controlled by the three 16-bit read/write duty cycle registers, PWMCHA, PWMCHB and PWMCHC. The integer value in the register PWMCHA controls the duty cycle of the signals on AH and AL, in PWMCHB controls the duty cycle of the signals on BH and BL and in PWMCHC controls the duty

cycle of the signals on CH and CL. The duty cycle registers are programmed in integer counts of the fundamental time unit, t_{CK}, and define the desired on-time of the high side PWM signal produced by the three-phase timing unit over half the PWM period. The switching signals produced by the three-phase timing unit are also adjusted to incorporate the programmed dead time value in the PWMDT register. The three-phase timing unit produces active LO signals so that a LO level corresponds to a command to turn on the associated power device.

A typical pair of PWM outputs (in this case for AH and AL) from the timing unit are shown in Figure 22 for operation in single update mode. All illustrated time values indicate the integer value in the associated register and can be converted to time by simply multiplying by the fundamental time increment, t_{CK}. First, it is noted that the switching patterns are symmetrical about the midpoint of the switching period in this single update mode since the same values of PWMCHA, PWMTM and PWMDT are used to define the signals in both half cycles of the period. It can be seen how the programmed duty cycles are adjusted to incorporate the desired dead time into the resultant pair of PWM signals. Clearly, the dead time is incorporated by moving the switching instants of both PWM signals (AH and AL) away from the instant set by the PWMCHA register. Both switching edges are moved by an equal amount (PWMDT × t_{CK}) to preserve the symmetrical output patterns. Also shown is the PWMSYNC pulse whose width is set by the PWMSYNCWT register and Bit 3 of the SYSSTAT register, which indicates whether operation is in the first or second half cycle of the PWM period.

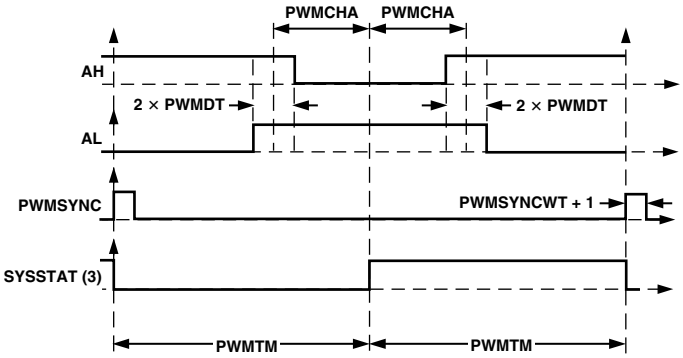

Figure 22. Typical PWM Outputs of Three-Phase Timing Unit in Single Update Mode (Active LO Waveforms)

The resultant on-times of the PWM signals over the full PWM period (two half periods) produced by the PWM timing unit, and illustrated in Figure 22, may be written as:

$$T_{AH} = 2 \times \left(PWMCHA - PWMDT\right) \times t_{CK}$$

$$T_{AL} = 2 \times \left(PWMTM - PWMCHA - PWMDT\right) \times t_{CK}$$

and the corresponding duty cycles are:

$$d_{AH} = \frac{T_{AH}}{T_S} = \frac{PWMCHA - PWMDT}{PWMTM}$$

$$d_{AL} = \frac{T_{AL}}{T_S} = \frac{PWMTM - PWMCHA - PWMDT}{PWMTM}$$

Obviously negative values of T_{AH} and T_{AL} are not permitted and the minimum permissible value is zero, corresponding to a 0% duty cycle. In a similar fashion, the maximum value is T_S, corresponding to a 100% duty cycle.

The output signals from the timing unit for operation in double update mode are shown in Figure 23. This illustrates a completely general case where the switching frequency, dead time and duty cycle are all changed in the second half of the PWM period. Of course, the same value for any or all of these quantities could be used in both halves of the PWM cycle. However, it can be seen that there is no guarantee that symmetrical PWM signals will be produced by the timing unit in this double update mode. Additionally, it is seen that the dead time is inserted into the PWM signals in the same way as in the single update mode.

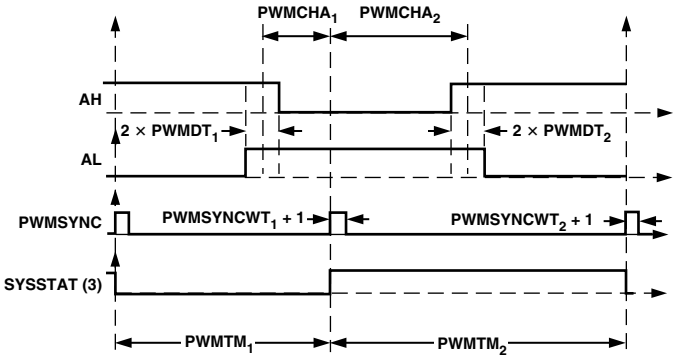

Figure 23. Typical PWM Outputs of Three-Phase Timing Unit in Double Update Mode (Active LO Waveforms)

In general the on-times of the PWM signals over the full PWM period in double update mode can be defined as:

$$T_{AH} = \left(PWMCHA_1 + PWMCHA_2 - PWMDT_1 - PWMDT_2\right) \times t_{CK}$$

$$T_{AL} = \left(PWMTM_1 + PWMTM_2 - PWMCHA_1 - PWMCHA_2 - PWMDT_1 - PWMDT_2\right) \times t_{CK}$$

where the subscript 1 refers to the value of that register during the first half cycle and the subscript 2 refers to the value during the second half cycle. The corresponding duty cycles are:

$$d_{AH} = \frac{T_{AH}}{T_S} = \frac{PWMCHA_1 + PWMCHA_2 - PWMDT_1 - PWMDT_2}{PWMTM_1 + PWMTM_2}$$

$$d_{AL} = \frac{T_{AL}}{T_S} = \frac{PWMTM_1 + PWMTM_2 - PWMCHA_1 + PWMCHA_2 - PWMDT_1 - PWMDT_2}{PWMTM_1 + PWMTM_2}$$

since for the completely general case in double update mode, the switching period is given by:

$$T_S = \left(PWMTM_1 + PWMTM_2\right) \times t_{CK}$$

Again, the values of T_{AH} and T_{AL} are constrained to lie between zero and T_S. Similar PWM signals to those illustrated in Figure 22 and Figure 23 can be produced on the BH, BL, CH and CL outputs by programming the PWMCHB and PWMCHC registers in a manner identical to that described for PWMCHA.

Special Consideration for PWM Operation in Overmodulation

The PWM Timing Unit is capable of producing PWM signals with variable duty cycle values at the PWM output pins. At the extremities of the modulation process, both 0% and 100% modulation are possible. These two modes are termed **full OFF** and **full ON** respectively. In between, for other duty cycle values, the operation is termed **normal modulation**.

- **Full ON:** The PWM for any pair of PWM signals is said to operate in FULL ON when the desired HI side output of the three-phase Timing Unit is in the ON state (LO) between successive PWMSYNC pulses. This state may be entered by virtue of the commanded duty cycle values (in conjunction with the PWMDT register) or by virtue of the correct operation of the pulse deletion circuit.
- **Full OFF:** The PWM for any pair of PWM signals is said to operate in FULL OFF when the desired HI side output of the three-phase Timing Unit is in the OFF state (HI) between successive PWMSYNC pulses. This state may be entered by virtue of the commanded duty cycle values (in conjunction with the PWMDT register) or by virtue of the correct operation of the pulse deletion circuit.
- **Normal Modulation:** The PWM for any pair of PWM signals is said to operate in normal modulation when the desired output duty cycle is other than 0% or 100% between successive PWMSYNC pulses.

There are certain situations when transitioning either into or out of either full ON or full OFF where it is necessary to insert additional dead time delays to prevent potential shoot through conditions in the inverter. The particular situation also depends on whether operation is in single or double update mode. In double update mode, it is also necessary to consider whether the PWM unit is transitioning from the first half cycle to the second half cycle or vice versa. These transitions are detected automatically by the ADMC401 and, if appropriate, the dead time is inserted.

The insertion of the additional dead time into one of the PWM signals of a given pair during these transitions is only needed if otherwise both PWM signals would be required to toggle at the PWMSYNC boundary. The additional dead time delay is inserted into the PWM signal that is toggling into the ON state. In effect the turn ON of this signal is delayed by an amount $2 \times PWMDT \times t_{CK}$ from the rising edge of PWMSYNC. After this delay, the PWM signal is allowed to turn ON, provided the desired output is still the ON state after the dead time delay.

Figure 24 illustrates two examples of such transitions where in Figure 24(a) when transitioning from normal modulation to full ON at the half cycle boundary in double update mode, no special action is needed. However, in Figure 24(b) when transitioning into full OFF at the same boundary, it can be seen that an additional dead time is necessary.

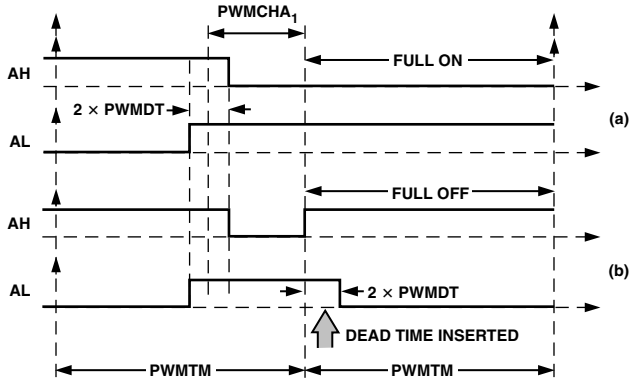

Figure 24. Examples of transitioning form normal modulation into either Full ON or Full OFF where it may be necessary to insert additional dead times.

Minimum Pulsewidth, PWMPD Register

In many power converter switching applications, it is desirable to eliminate PWM switching signals below a certain width. It takes a certain finite time to both turn on and turn off power semiconductor devices. Therefore, if the width of any of the PWM signals goes below some minimum value, it may be desirable to completely eliminate the PWM switching for that particular cycle. The allowable minimum pulsewidth for any of the six PWM outputs that can be produced by the PWM controller may be programmed using the 10-bit PWMPD register. The minimum pulsewidth, T_{MIN}, is programmed in increments of t_{CK} as:

$$T_{MIN} = PWMPD \times t_{CK}$$

so that a *PWMPD* value of 0x00A defines a permissible minimum on time of 0.39 µs for a 26 MHz CLKOUT. The operation of the minimum pulsewidth control ensures that the time from turning ON to turning OFF (or alternatively from turning OFF to turning ON) any PWM signal is never less than the T_{MIN} value as specified by the PWMPD register. If the PWM controller detects that the time between turning ON and turning OFF any one PWM signal (say AH) is less than T_{MIN}, the PWM pulse is deleted and the PWM signal remains completely OFF over the PWM period. The complementary signal, AL in this case, is then turned completely ON.

Effective PWM Resolution

In single update mode, the same values of PWMCHA, PWMCHB and PWMCHC are used to define the on-times in both half cycles of the PWM period. As a result, the effective resolution of the PWM generation process is $2t_{CK}$ (or 77 ns for a 26 MHz CLKOUT), since incrementing one of the duty cycle registers by one changes the resultant on-time of the associated PWM signals by t_{CK} in each half period (or $2t_{CK}$ for the full period). In double update mode, improved resolution is possible since different values of the duty cycles registers are used to define the on-times in both the first and second halves of the PWM period. As a result, it is possible to adjust the on-time over the whole period in increments of t_{CK}. This corresponds to an effective PWM resolution of t_{CK} in double update mode (or 38.5 ns for a 26 MHz CLKOUT). The achievable PWM switching frequency at a given PWM resolution is tabulated in Table IV.

Table IV. Achievable PWM Resolution in Single and Double Update Modes (CLKOUT = 26 MHz)

Resolution (Bits)	Single Update Mode PWM Frequency (kHz)	Double Update Mode PWM Frequency (kHz)
8	50.8	102
9	25.4	50.8
10	12.7	25.4
11	6.35	12.7
12	3.17	6.35

OUTPUT CONTROL UNIT, PWMSEG REGISTER

The operation of the Output Control Unit is controlled by the 9-bit read/write PWMSEG register which controls two distinct features that are directly useful in the control of ECM or BDCM.

Crossover Feature

The PWMSEG register contains three crossover bits; one for each pair of PWM outputs. Setting Bit 8 of the PWMSEG register enables the crossover mode for the AH/AL pair of PWM

signals, setting Bit 7 enables crossover on the BH/BL pair of PWM signals and setting Bit 6 enables crossover on the CH/CL pair of PWM signals. If crossover mode is enabled for any pair of PWM signals, the high side PWM signal from the timing unit (AH say) is diverted to the associated low side output of the Output Control Unit so that the signal will ultimately appear at the AL pin. Of course, the corresponding low side output of the Timing Unit is also diverted to the complementary high side output of the Output Control Unit so that the signal appears at the AH pin. Following a reset, the three crossover bits are cleared so that the crossover mode is disabled on all three pairs of PWM signals.

Output Enable Function

The PWMSEG register also contains six bits (Bits 0 to 5) that can be used to individually enable or disable each of the six PWM outputs. The PWM signal of the AL pin is enabled by setting Bit 5 of the PWMSEG register while Bit 4 controls AH, Bit 3 controls BL, Bit 2 controls BH, Bit 1 controls CL and Bit 0 controls the CH output. If the associated bit of the PWMSEG register is set, the corresponding PWM output is disabled irrespective of the value of the corresponding duty cycle register. This PWM output signal will remain in the OFF state as long as the corresponding enable/disable bit of the PWMSEG register is set. This output enable function is implemented after the crossover function. Following a reset, all six enable bits of the PWMSEG register are cleared so that all PWM outputs are enabled by default. In a manner identical to the duty cycle registers, the PWMSEG is latched on the rising edge of the PWMSYNC signal so that changes to this register only become effective at the start of each PWM cycle in single update mode. In double update mode, the PWMSEG register can also be updated at the midpoint of the PWM cycle.

Brushless DC Motor (Electronically Commutated Motor) Control

In the control of an ECM only two inverter legs are switched at any time and often the high side device in one leg must be switched ON at the same time as the low side driver in a second leg. Therefore, by programming identical duty cycle values for two PWM channels (i.e., PWMCHA = PWMCHB) and setting Bit 7 of the PWMSEG register to crossover the BH/BL pair of PWM signals, it is possible to turn ON the high side switch of Phase A and the low side switch of phase B at the same time. In the control of ECM, it is usual that the third inverter leg (Phase C in this example) be disabled for a number of PWM cycles. This function is implemented by disabling both the CH and CL PWM outputs by setting Bits 0 and 1 of the PWMSEG register. This situation is illustrated in Figure 25, where it can be seen that both the AH and BL signals are identical, since PWMCHA = PWMCHB and the crossover bit for Phase B is set. In addition, the other four signals (AL, BH, CH and CL) have been disabled by setting the appropriate enable/disable bits of the PWMSEG register. For the situation illustrated in Figure 25, the appropriate value for the PWMSEG register is 0x00A7. In normal ECM operation, each inverter leg is disabled for certain periods of time, so that the PWMSEG register is changed based on the position of the rotor shaft (motor commutation).

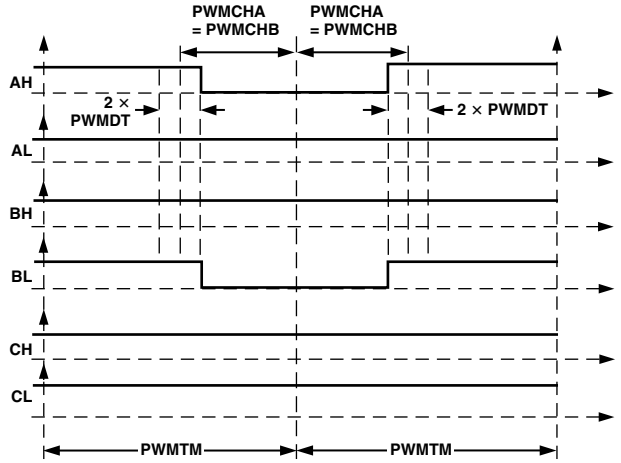

Figure 25. Example active LO PWM signals suitable for ECM control, PWMCHA = PWMCHB, crossover BH/BL pair and disable AL, BH, CH and CL outputs. Operation is in single update mode.

GATE DRIVE UNIT, PWMGATE REGISTER

High Frequency Chopping

The Gate Drive Unit of the PWM controller adds features that simplify the design of isolated gate drive circuits for PWM inverters. If a transformer-coupled power device gate drive amplifier is used, the active PWM signal must be chopped at a high frequency. The 10-bit PWMGATE register allows the programming of this high frequency chopping mode. The chopped active PWM signals may be required for the high-side drivers only, for the low side drivers only or for both the high side and low side switches. Therefore, independent control of this mode for both high and low side switches is included with two separate control bits in the PWMGATE register.

Typical PWM output signals with high frequency chopping enabled on both high side and low side signals are shown in Figure 26. Chopping of the high side PWM outputs (AH, BH and CH) is enabled by setting Bit 8 of the PWMGATE register. Chopping of the low side PWM outputs (AL, BL and CL) is enabled by setting Bit 9 of the PWMGATE register. The high frequency chopping frequency is controlled by the 8-bit word (GDCLK) placed in Bits 0 to 7 of the PWMGATE register. The period of this high frequency carrier is:

$$T_{CHOP} = \left[4 \times \left(GDCLK + 1\right)\right] \times t_{CK}$$

and the chopping frequency is therefore an integral subdivision of the CLKOUT frequency:

$$f_{CHOP} = \frac{f_{CLKOUT}}{\left[4 \times \left(GDCLK + 1\right)\right]}$$

The *GDCLK* value may range from 0 to 255, corresponding to a programmable chopping frequency rate from 25.4 kHz to 6.5 MHz for a 26 MHz CLKOUT rate. The gate drive features must be programmed before operation of the PWM controller and typically are not changed during normal operation of the PWM controller. Following reset, all bits of the PWMGATE register are cleared so that high frequency chopping is disabled, by default.

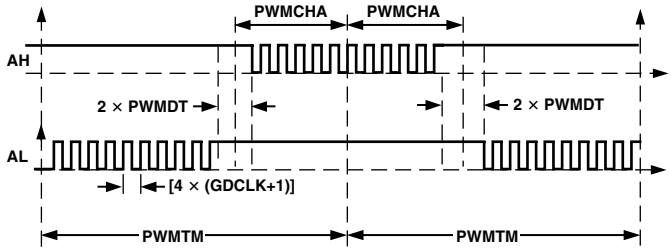

Figure 26. Typical active LO PWM signals with high frequency gate chopping enabled on both high side and low side switches.

PWM Polarity Control, PWMPOL Pin

The polarity of the PWM signals produced at the output pins AH to CL may be selected in hardware by the PWMPOL pin. Connecting the PWMPOL pin to DGND selects active LO PWM outputs, such that a LO level is interpreted as a command to turn on the associated power device. Conversely, connecting the PWMPOL pin to V_{DD} selects active HI PWM and the associated power devices are turned ON by a HI level at the PWM outputs. There is an internal pull-up on the PWMPOL pin, so that if this pin becomes disconnected (or is not connected), active HI PWM will be produced. The level on the PWMPOL pin may be read from Bit 2 of the SYSSTAT register, where a zero indicates a measured LO level at the PWMPOL pin.

SWITCHED RELUCTANCE MODE

The PWM block of the ADMC401 contains a switched reluctance (SR) mode that is controlled by the $\overline{\text{PWMSR}}$ pin. The switched reluctance mode is enabled by connecting the $\overline{\text{PWMSR}}$ pin to DGND. In this SR mode, the low side PWM signals from the three-phase timing unit assume permanently ON states, independent of the value written to the duty-cycle registers. The duty cycles of the high side PWM signals from the timing unit are still determined by the three duty cycle registers. Using the crossover feature of the output control unit, it is possible to divert the permanently ON PWM signals to either the high-side or low-side outputs. This mode is necessary because in the typical power converter configuration for switched or variable reluctance motors, the motor winding is connected between the two power switches of a given inverter leg. Therefore, in order to build up current in the motor winding, it is necessary to turn on both switches at the same time. Typical active LO PWM signals during operation in SR mode are shown in Figure 27 for operation in double update mode. It is clear that the three low-side signals (AL, BL and CL) are permanently ON and the three high side signals are modulated in the usual manner so that the corresponding high side power switches are switched between the ON and OFF states. The SR mode can *only* be enabled by connecting the $\overline{\text{PWMSR}}$ pin to GND. There is no software means by which this mode can be enabled. There is an internal pull-up resistor on the $\overline{\text{PWMSR}}$ pin so that if this pin is left unconnected or becomes disconnected the SR mode is disabled. Of course, the SR mode is disabled when the $\overline{\text{PWMSR}}$ pin is tied to V_{DD}.

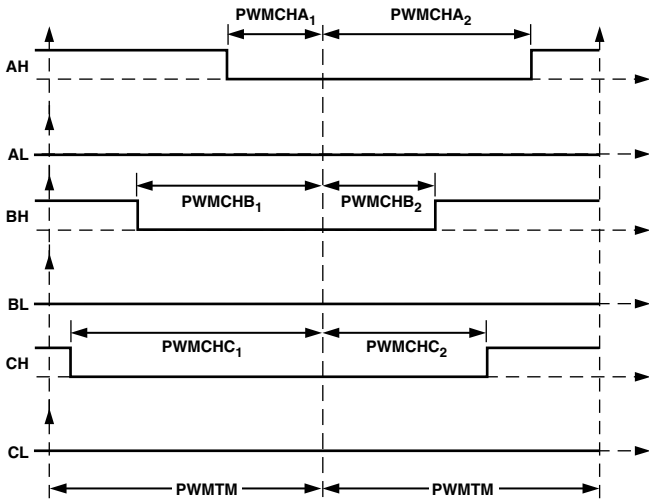

Figure 27. Active LO PWM signals in SR Mode (PWMPOL = $\overline{\text{PWMSR}}$ = DGND) for ADMC401 in double update mode.

PWM SHUTDOWN

In the event of external fault conditions, it is essential that the PWM system be instantaneously shutdown in a safe fashion. A low level on the $\overline{\text{PWMTRIP}}$ pin provides an instantaneous, asynchronous (independent of the DSP clock) shutdown of the PWM controller. All six PWM outputs are placed in the OFF state (as defined by the PWMPOL pin). *Note, however, when the $\overline{\text{PWMSR}}$ pin is in the SR mode, the three low side PWM signals from the three-phase timing unit will remain in the ON state.* In addition, the PWMSYNC pulse is disabled and the associated interrupt is stopped. The $\overline{\text{PWMTRIP}}$ pin has an internal pull-down resistor so that if the pin becomes unconnected the PWM will be disabled. The state of the $\overline{\text{PWMTRIP}}$ pin can be read from Bit 0 of the SYSSTAT register.

The 12 PIO lines of the ADMC401 can also be configured to operate as PWM shutdown pins using the PIOPWM register. The 12-bit PIOPWM has a control bit for each PIO line (Bit 0 controls PIO0, etc.). Setting the control bit enables the corresponding PIO line as a PWM shutdown pin. A falling edge on the PIO line will then generate an instantaneous, asynchronous shutdown of the PWM system, in a manner identical to the $\overline{\text{PWMTRIP}}$ pin. Also like $\overline{\text{PWMTRIP}}$, all of the PIO lines have internal pull-down resistors, so that if a PIO pin becomes unconnected and is configured as a PWM shutdown pin, the PWM will be disabled. Following a reset, all PIO lines are configured as inputs, have pull-downs and are programmed as PWM shut down pins (PIOPWM = 0x0FFF) so that the PWM is shutdown. Correct operation of the PWM is not possible without first correctly configuring the PIO system.

In addition, it is possible to initiate a PWM shutdown in software by writing to the 1-bit PWMSWT register. The act of writing to this register generates a PWM shutdown command in a manner identical to the $\overline{\text{PWMTRIP}}$ or PIO pins. A hardware trip has no effect on the PWMSWT register. It does not matter which value is written to the PWMSWT register. However, following a PWM shutdown, it is possible to read the PWMSWT register to determine if the shutdown was generated by hardware or software. If the PWM shutdown was caused by the PWMSWT register, a 1 will be read back from the PWMSWT register. Reading the PWMSWT register automatically clears its contents.

Table V. Fundamental Characteristics of PWM Generation Unit of ADMC401 (CLKOUT = 26 MHz)

Parameter		Test Conditions	Min	Typ	Max	Unit
	Counter Resolution				16	Bits
	Edge Resolution	Double Update Mode		38.5		ns
T_D	Programmable Dead Time		0		78.8	µs
	Dead Time Increments			77.0		ns
T_{MIN}	Programmable Minimum Pulsewidth		0		39.4	µs
	Minimum Pulsewidth Increments			38.5		ns
f_{PWM}	PWM Switching Frequency	16-Bit Resolution	198			Hz
f_{PWM}	PWM Switching Frequency[1]	8-Bit Resolution			102	kHz
$T_{PWMSYNC}$	PWMSYNC Pulsewidth		38.5		9850	ns
	PWMSYNC Pulsewidth Increments			38.5		ns
f_{CHOP}	Gate Drive Chopping Frequency		25.4		6500	kHz

NOTE: Higher switching frequencies are possible at reduced resolutions (i.e., 202.8 kHz at 7 bits, 405.6 kHz at 6 bits, etc.)

On the occurrence of a PWM shutdown command (either from the $\overline{\text{PWMTRIP}}$ pin, the PIO lines or the PWMSWT register), a PWMTRIP interrupt will be generated. In addition, the PWMSYNC pulse no longer appears at the output pin. However, internal operation of the PWM timer continues. Following a PWM shutdown, the PWM can only be re-enabled (in a PWMTRIP interrupt service routine, for example) by writing to all of the PWMTM, PWMCHA, PWMCHB and PWMCHC registers. Provided the external fault has been cleared and the $\overline{\text{PWMTRIP}}$ or appropriate PIO lines have returned to a HI level, the PWM controller will restart.

PWM REGISTERS

The PWM registers are described in at the end of this data sheet. The parameters of the PWM block for operation at 26 MHz are tabulated in Table V.

ENCODER INTERFACE UNIT

OVERVIEW OF ENCODER INTERFACE UNIT

The ADMC401 incorporates a powerful encoder interface to incremental shaft encoders, that are often used for position feedback in high performance motion control systems. The functional block diagram of the entire encoder interface system of the ADMC401 is shown in Figure 28.

The encoder interface unit (EIU) includes a 16-bit quadrature up/down counter, programmable input noise filtering of the encoder input signals and the zero markers, and has four dedicated pins on the ADMC401. The quadrature encoder signals (or alternatively, frequency and direction inputs) are applied at the EIA and EIB pins. In addition, two zero marker/strobe inputs are provided on pins EIZ and EIS. These inputs may be used to latch the contents of the encoder quadrature counter into dedicated registers, EIZLATCH and EISLATCH, on the occurrence of external events at the EIZ and EIS pins. These events may be programmed to be either rising edge only (latch event) or rising edge if the encoder is moving in the forward direction and falling edge if the encoder is moving in the reverse direction (software latched zero marker functionality). The encoder interface unit incorporates programmable noise filtering on the four encoder inputs to prevent spurious noise pulses from adversely affecting the operation of the quadrature counter. The encoder interface unit operates at a clock frequency equal to the DSP instruction rate. The encoder interface unit operates correctly with encoder signals at frequencies of up to 4.33 MHz, corresponding to a maximum quadrature frequency of 17.3 MHz (assuming an ideal quadrature relationship between the input EIA and EIB signals).

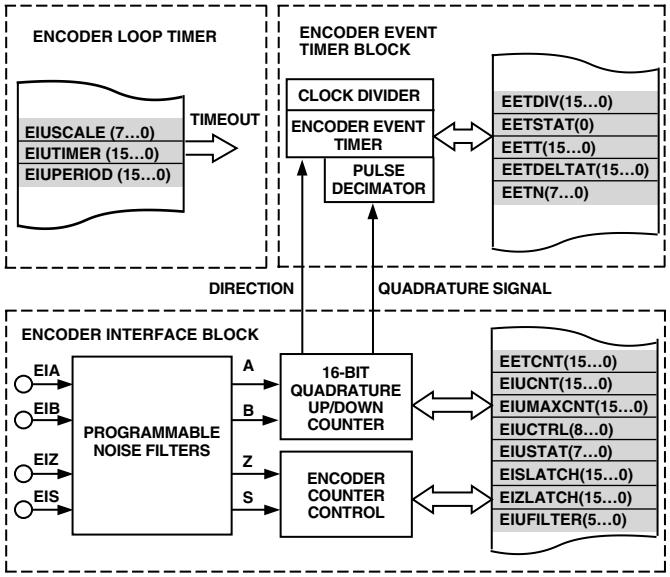

Figure 28. Configuration of Encoder Interface System of ADMC401

The EIU may be programmed to use the zero marker on EIZ to reset the quadrature encoder in hardware, if required. Alternatively, the zero marker can be ignored and the encoder quadrature counter is reset according to the contents of a maximum count register, EIUMAXCNT. There is also a "single north marker" mode available in which the encoder quadrature counter is reset only on the first zero marker pulse. Both modes are enabled by dedicated control bits in the EIU control register, EIUCTRL. A status bit is set in the EIUSTAT register on the first occurrence of the zero marker.

The encoder interface unit can also be made to implement some error checking functions. If the error checking mode is enabled, upon the occurrence of a zero pulse, the contents of the encoder counter register are compared with the expected value (0 or EIUMAXCNT depending on the direction of rotation). If an encoder count error is detected, a status bit in the EIUSTAT

register is set and an EIU count error interrupt is generated. An additional status bit is provided in the EIUSTAT register that indicates the initialization state of the EIU. Until the EIUMAXCNT register is written to, the EIU is not initialized. Four status bits in the EIUSTAT register provide the state of the four EIU inputs, EIA, EIB, EIZ and EIS.

The encoder interface unit of the ADMC401 contains a 16-bit loop timer that behaves in a manner similar to the programmable interval timer of the DSP core. The loop timer consist of a timer register, period register and scale register so that it can be programmed to timeout and reload at appropriate intervals. A control bit in the EIUCTRL register is used to enable/disable this loop timer. When this loop timer times out, an EIU loop timer timeout interrupt is generated. This interrupt could be used to control the timing of speed and position control loops in high performance drives.

The encoder interface unit also includes a high performance encoder event timer (EET) block that permits the accurate timing of successive events of the encoder inputs. The EET can be programmed to time the duration between up to 255 encoder pulses and can be used to enhance velocity estimation, particularly at low speeds of rotation. The information from the registers of the EET block can be latched in two ways. In one mode, the contents of the EIU quadrature count register, EIUCNT and all relevant EET registers (EETT and EETDELTAT) are latched when the EIU loop timer times out. In the second mode, the act of reading the EIUCNT register also simultaneously latches the EET registers. The EET data latching mode is selected by a control bit in the EIUCTRL register.

ENCODER LOOP TIMER

The EIU contains a 16-bit loop timer that is structured in a manner similar to the interval timer of the DSP core (TCOUNT, TPERIOD and TSCALE registers). The corresponding registers of the encoder loop timer are the 16-bit EIUTIMER and EIUPERIOD registers and the 8-bit EIUSCALE register. The EIU loop timer is clocked at the CLKOUT rate, t_{CK}.

The EIU loop timer can be used to generate periodic interrupts based on multiples of the DSP cycle time. The EIU loop timer is enabled by setting Bit 5 of the EIUCTRL register. When enabled, the 16-bit timer register (EIUTIMER) is decremented every N cycles, where N-1 is the scaling value stored in the 8-bit EIUSCALE register. When the value of the EIUTIMER register reaches zero, the EIU loop timer timeout interrupt is generated and the EIUTIMER register is reloaded with the 16-bit value in the EIUPERIOD register. The scaling feature of this timer, provided by the EIUSCALE register, allows the 16-bit timer to generate periodic interrupts over a wide range of periods. For a 26 MHz CLKOUT rate (38.5 ns period), the timer can generate interrupts with periods of 38.5 ns up to 2.52 ms with a zero scale value (EIUSCALE = 0). When scaling is used, time periods can range up to 0.645 sec. The EIU loop timer timeout interrupt can be masked in the PICMASK register.

ENCODER INTERFACE STRUCTURE AND OPERATION

Introduction

The encoder interface section consists of a 16-bit quadrature up/down counter and a 16-bit EIUCNT register that allows the up/down counter to be read by the DSP. There is also a 16-bit EIUMAXCNT register that must be written to, to initialize the encoder system. Until the EIUMAXCNT register has been written to, the encoder interface unit is not initialized and Bit 2 of the EIUSTAT register is set. The contents of the EIUMAXCNT register are used in certain operating modes to reset the quadrature counter. The contents of the EIUMAXCNT register are also used for error checking of the EIU. Operation of the encoder interface is controlled by the EIUCTRL register.

Programmable Input Noise Filtering of Encoder Signals

A functional block diagram of the input stages of the encoder interface is shown in Figure 29. The four encoder input signals (EIA, EIB, EIZ and EIS) are first synchronized in input synchronization buffers. This eliminates the asynchronous nature of real world encoder signals prior to use in the encoder interface unit logic. Subsequently, all four synchronized signals (EIAS, EIBS, EIZS and EISS) are applied to programmable noise filtering circuits that can be programmed to reject pulses that are shorter than some suitable value. The outputs of the filter stage are applied to the quadrature counter stage.

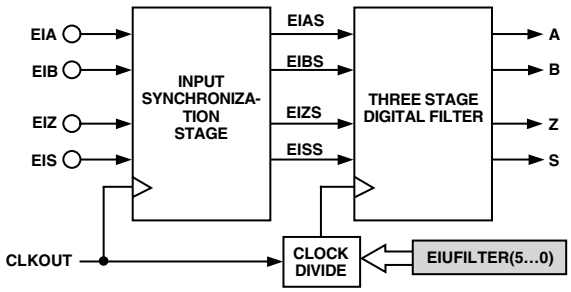

Figure 29. Functional Block Diagram of Input Stage of Encoder Interface

Each of the four synchronized input signals (EIAS, EIBS, EIZS and EISS) is applied to a three clock cycle delay filter such that the filtered output signals are not permitted to change until a stable value has been registered for three successive clock cycles. While the encoder signals are changing, the filter maintains the previous output value. The clock frequency used for the filter circuits is programmed by Bits 0 to 5 of the EIUFILTER register. The 6-bit quantity written to Bits 0 to 5 of the EIUFILTER register is used to divide the CLKOUT frequency and provide the clock source for the encoder noise filters. If the value written to Bits 0 to 5 of the EIUFILTER register is N, the period of the clock source used in the encoder filters is $(N + 1) \times t_{CK}$. This filter structure guarantees that encoder pulses of less width than $2 \times (N + 1) \times t_{CK}$ will always be rejected by the filter stage. Additionally, pulses greater than $3 \times (N + 1) \times t_{CK}$ will always get through the filter stage and be passed to the internal quadrature counter. Encoder pulses of widths between $2 \times (N + 1) \times t_{CK}$ and $3 \times (N+1) \times t_{CK}$ may either pass through or be rejected by the encoder filter. Whether or not such pulses pass through the filter depends on the exact nature of the synchronization between the external asynchronous pulses and the internal DSP clock and is impossible to predict.

For example, writing a value of 3 to the EIUFILTER register, means that the clock frequency used in the encoder filters is 6.5 MHz (for a CLKOUT rate of 26 MHz). In order to register as a stable value, the encoder input signals must be stable for three of these 6.5 MHz cycles (or 462 ns). Consequently, the smallest period that will be registered on the synchronized encoder inputs is 924 ns, corresponding to a maximum encoder

rate of 1.08 MHz. In general, the maximum encoder rate that can be consistently recognized is given by:

$$f_{ENCMAX} = \frac{f_{CLKOUT}}{6 \times (N+1)}$$

Operation of both the input synchronization logic and the noise filters is shown in Figure 30 for the default case where EIUFILTER(5::0) = 0x00 and the noise filters are clocked at CLKOUT.

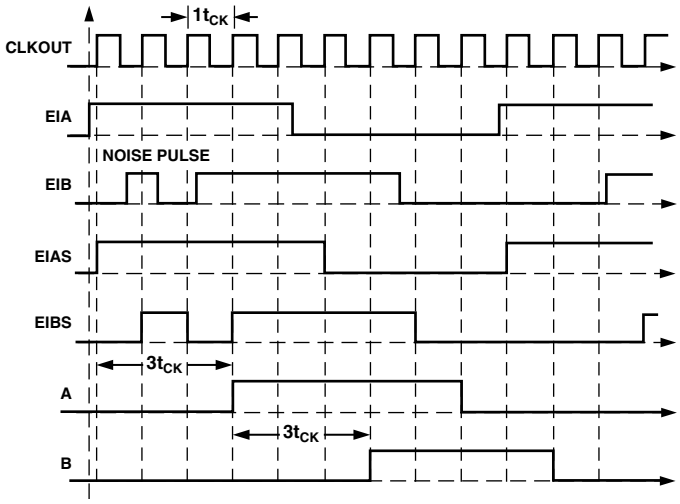

Figure 30. Operation of input synchronization and noise filters of encoder interface with EIUFILTER(5:0) = 0x00 such that the filters are operated at CLKOUT.

The default value for EIUFILTER(5::0) following a power on or reset is 0x00 so that the EIU filters are clocked at the CLKOUT rate and minimal filtering is applied. There is a direct trade-off between the amount of filtering applied to the encoder inputs and the maximum possible encoder signal rate. In effect, the larger the value of EIUFILTER(5::0), the more filtering that is applied to the encoder signals, so that, for a given number of encoder lines, the maximum speed of rotation is lower.

The influence of the encoder filter on the zero marker signals (EIZ and EIS) can be somewhat different that on the EIA or EIB signals, depending on the exact nature of the encoder. In common incremental encoders, the width of the zero marker can be equal to a quarter, a half or a full period of one of the quadrature signals (say EIA). Applying the three-stage delay filter to a zero marker whose width is either equal to half or a full quadrature pulse period does not change the achievable maximum encoder rate. However, the maximum possible encoder rate is changed if the three-stage filter is applied in the case where the width of the zero marker is equal to a quarter of the EIA or EIB period. In this case the influence of the three-stage delay filter is to effectively half the maximum encoder signal rate to that described above (or 2.15 MHz for a 26 MHz CLKOUT rate).

Encoder Counter Direction

The direction of quadrature counting is determined by Bit 0 (REV) of the EIUCTRL register. If the REV bit is cleared, the signal at the EIA pin is fed to the A input to the quadrature counter and the EIB pin is fed to the B input. Thus, if the EIA-encoder signal leads the EIB-signal (and therefore the A signal leads the B signal), the quadrature counter is incremented on each edge. This (A signal leads the B signal) is defined as the *forward direction of motion*. Setting Bit 0 of the EIUCTRL register causes the signal at the EIA pin to be fed to the B input to the quadrature counter and the signal EIB becomes the A input to the quadrature counter. Therefore, if the EIA signal led the EIB signal at the pins of the ADMC401, the A input to the quadrature counter will now lag the B input. This will be recognized as rotation in the reverse direction and the counter will be decremented on each quadrature pulse. Following a reset, the REV bit is cleared.

The two encoder signals are used to derive a quadrature signal that is used, in conjunction with a direction bit, to increment or decrement the encoder counter and also the encoder event timer. The status of the direction signal is indicated at Bit 1 of the EIUSTAT register. While the encoder counter is incrementing, Bit 1 is set. Alternatively, when the encoder counter is decrementing, Bit 1 of the EIUSTAT register is cleared.

Alternative Frequency and Direction Inputs

Instead of the quadrature EIA and EIB encoder inputs, the encoder interface unit can also accept alternative Frequency and Direction Inputs. This mode is enabled by setting Bit 6 of the EIUCTRL register. In this so-called *FD Mode*, the EIA input pin accepts a frequency signal and the EIB pin accepts the direction signal. The signal on these pins are subject to the same synchronization and filtering logic as described previously. However, in this mode the quadrature counter is incremented or decremented on both the falling and rising edges of the signal on the EIA pin. If the EIB pin is LO, forward operation is assumed and the counter is incremented on each edge of the frequency signal on the EIA input. On the other hand, if the EIB pin is HI, reverse rotation is assumed and the quadrature counter is decremented at each edge of the signal on the EIA pin. On power-up or reset, Bit 6 of the EIUCTRL register is cleared so that this mode is disabled by default. The following modes are not supported when FD Mode is enabled: Encoder Counter Reset mode, Single North Marker mode, and Encoder Error Checking mode. In other words, when Bit 6 of EIUCTRL is set, Bits 1, 2, and 3 should be cleared.

Encoder Counter Reset

The ZERO bit (Bit 1) of the EIUCTRL register determines if the encoder zero marker is used to hardware reset the up/down counter of the encoder interface. When Bit 1 of the EIUCTRL register is set, the zero marker signal on the EIZ pin is used to reset the up/down counter to zero (if moving in the forward direction) or to the value in the EIUMAXCNT register (if moving in the reverse direction). The reset operation takes place on the next quadrature pulse after the zero marker has been recognized. In order to ensure correct encoder counting (no missing or spurious codes) the logic in the encoder counter latches the conditions (appropriate encoder edge) at which the first reset is performed. Thereafter, irrespective of operating conditions, the encoder reset operation is always aligned with the same encoder edge. For example, if the first reset operation occurs on the rising edge of B and the encoder is moving in the forward direction, then all subsequent reset operations are aligned with the rising edge of the B signal (while moving in the forward direction) and on the falling edge of B for rotation in the reverse direction. In order to account for zero marker signals of different widths, the zero marker will be recognized as the rising edge of the EIZ signal when moving in the forward direction. When

moving in the reverse direction, the zero marker is recognized at the falling edge of the signal at the EIZ pin.

When the ZERO bit of the EIUCTRL register is cleared, the zero marker is not used to reset the counter. In this mode, the contents of the EIUMAXCNT register are used as the reset value for the up/down counter. For example, for an N-line incremental encoder, the appropriate value to write to the EIUMAXCNT register is 4N–1. Therefore, for a 1024 line encoder, a value of 0x0FFF (= 4095) would be written to the EIUMAXCNT register. However, since absolute position information is not available in this mode, due to the absence of the zero marker, the full 16-bit range of the quadrature counter may be employed by writing a value of 0xFFFF to the EIUMAXCNT register. Following a reset, the ZERO bit is cleared. The value written to the EIUMAXCNT register must be in the form 4N–1, where N is any integer.

Registration Inputs and Software Zero Marker

The encoder interface unit of the ADMC401 provides two marker signals, EIZ and EIS that are both filtered and synchronized in a manner identical to the other encoder signals to produce the Z and S signals. Z can be used as a hardware reset of the encoder counter, as described above. However, in many applications a hardware reset of the counter may not be desirable. Instead, the encoder counter can be programmed to operate in full 16-bit roll-over mode, by clearing Bit 1 of the EIUCTRL register and programming EIUMAXCNT to be 0xFFFF. In this case, the quadrature counter will use the full 16-bit range of the EIUCNT register.

The signals on Z and S can be configured to latch the contents of the EIUCNT register into dedicated memory mapped registers (EIZLATCH for the Z signal and EISLATCH for the S signal) on the occurrence of definite events on these pins. The exact nature of the events are determined by Bit 7 of the EIUCTRL register for the Z input and Bit 8 of the EIUCTRL register for the S signal.

If Bit 7 of the EIUCTRL register is cleared, the contents of the EIUCNT register are latched to the EIZLATCH register on the occurrence of a rising edge on the Z signal. In this mode, the signals can be used to latch or freeze the EIUCNT contents on the occurrence of an external event such as that from limit switches or other triggers. If Bit 7 of the EIUCTRL register is set, then the EIUCNT contents are latched to the EIZLATCH register on the occurrence of the next quadrature pulse following the rising edge of the Z signal if the quadrature counter is incrementing (count up). If the quadrature counter is decrementing, the EIUCNT contents are latched to the EIZLATCH register on the next quadrature pulse following the falling edge of the Z signal. In this mode, the action resembles that of a zero marker function. The advantage is that the EIUCNT register contents are latched at the appropriate zero marker inputs, but the contents of the quadrature counter are not affected.

Bit 8 of the EIUCTRL register defines the S events that cause the EIUCNT register to be latched to the EISLATCH register. When Bit 8 of the EIUCTRL register is cleared, the contents of the EIUCNT register are latched to the EISLATCH register on the occurrence of a rising edge on the S signal, in a manner identical to that for the Z input. If Bit 8 of the EIUCTRL register is set, the operation is slightly different to that for the Z input. With the S input, the EIUCNT contents are latched to the EISLATCH register on the occurrence of a rising edge of the S signal if the quadrature counter is incrementing (count up). If the quadrature counter is decrementing, the EIUCNT contents are latched to the EISLATCH register on the occurrence of the falling edge of the S signal. The difference is that the latching occurs at the event on the S input and not at the next quadrature event (as with this case on the Z input).

EIZLATCH and EISLATCH are 16-bit read-only registers whose state is undefined on power-up. On power-up or following a reset, both Bits 7 and 8 of the EIUCTRL register are cleared.

Single North Marker Mode

A further reset mode, called *Single North Marker Mode,* is available in the encoder interface unit . This mode is enabled by setting Bit 2 (SNM) of the EIUCTRL register. For this mode to operate the ZERO bit (Bit1) of the EIUCTRL register must also be set. In this mode, the EIUCNT register is reset (to zero or EIUMAXCNT, depending on direction) only on the first occurrence of the zero marker. Subsequently, the EIUCNT register is reset by the natural roll-over to zero or the value in the EIUMAXCNT register. Following a reset, this SNM bit is cleared. Bit 7 of the EIUSTAT register is used to signal the first occurrence of a zero marker. When the first zero marker has been recognized by the EIU, Bit 7 of the EIUSTAT register is set.

Encoder Error Checking

Error checking in the EIU is enabled by setting Bit 3 (MON) of the EIUCTRL register. To be enabled, the ZERO bit of the EIUCTRL register must also be set for error checking. In this mode, the contents of the EIUCNT register are compared with the expected value (zero or EIUMAXCNT depending on direction) when the zero marker is detected. If a value other than the expected value is detected, an error condition is generated by setting Bit 0 of the EIUSTAT register and triggering an EIU count error interrupt. This EIU count error interrupt is managed and may be masked by the programmable interrupt controller (PIC) block. The encoder continues to count encoder edges after an error has been detected. Bit 0 of the EIUSTAT register is cleared on the occurrence of the next zero marker provided the error condition no longer exists and the EIUCNT register again matches the expected value. Following a reset, the MON bit is cleared.

Encoder Input Status

Four additional status bits are provided in the EIUSTAT register that provide a measure of the state of the four EIU inputs following the synchronization buffers and input filter. Bit 3 indicates the state of the EIA signal, Bit 4 indicates the state of the EIB signal, Bit 5 gives the state of the EIZ signal and Bit 6 gives the state of the EIS signal. The value of these status bits read is not affected by any of the control bits in the EIUCTRL register.

ENCODER EVENT TIMER

Introduction and Overview

The encoder event timer block forms an integral part of the EIU of the ADMC401, as shown in Figure 28. The EET accurately times the duration between encoder events. The information provided by the EET may be used to make allowances for the

asynchronous timing of encoder and DSP-reading events. As a result, more accurate computations of the position and velocity of the motor shaft may be performed.

The EET consists of a 16-bit encoder event timer, an encoder pulse decimator and a clock divider. The EET clock frequency is selected by the 16-bit read/write EETDIV clock divide register, whose value divides the CLKOUT frequency. The contents of the encoder event timer are incremented on each rising edge of the divided clock signal. An EETDIV value of zero gives the maximum divide value of 0x10000 (= 65,536), so that the clock frequency to the encoder event timer is at its minimum possible value.

The quadrature signal from the encoder interface unit is decimated at a rate determined by the 8-bit read/write EETN register. For example, writing a value of two to EETN, produces a pulse decimator output train at half the quadrature signal frequency, as shown in Figure 31. The rising edge of this decimated signal is termed a velocity event. Therefore, for an EETN value of two, a velocity event occurs every two encoder edges, or on each edge of one of the encoder signals. An EETN value of 0 gives an effective pulse decimation value of 256.

On the occurrence of a velocity event, the contents of the encoder event timer are stored in an intermediate Interval Time Register. Under normal operation, this register stores the elapsed time between successive velocity events. After the timer value has been latched at the velocity event, the contents of the encoder event timer are reset to one.

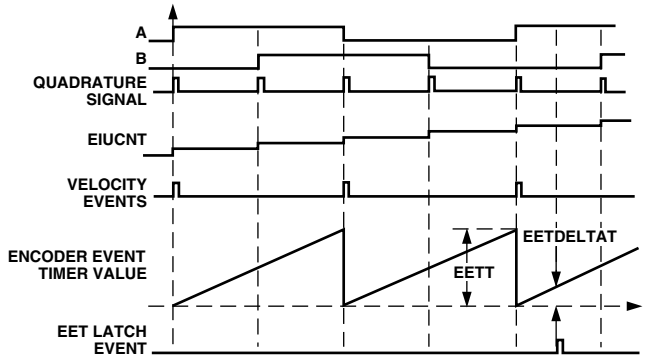

Figure 31. Operation of Encoder Interface Unit and EET of ADMC401 in the Forward Direction with EETN = 2

Latching Data from the EET

When using the data from the Encoder Event Timer, it is important to latch a triplet set of data at the same instant in time. The three pieces of data are the contents of the encoder quadrature up/down counter, the stored value in the Interval Time Register (giving the precise measured time between the last two velocity events) and the present value of the encoder event timer (giving an indication of how much time has passed since the last velocity event).

The data from the EET can be latched on the occurrence of two different events. The particular event is selected by Bit 4 (EETLATCH) of the EIUCTRL register. Setting this EETLATCH bit causes the data to be latched on the timeout of the encoder loop timer (EIUTIMER). At that time, the contents of the encoder quadrature counter (EIUCNT) are latched to a 16-bit register EETCNT. In addition, the contents of the intermediate Interval Time register are latched to the EETT register and the contents of the encoder event timer are latched to the EETDELTAT register. The three registers, EETCNT, EETT and EETDELTAT, then contain the desired triplet of position/speed data required for the control algorithm. In addition, if the timeout of the EIUTIMER is used to generate an EIU loop timer interrupt, the required data is automatically latched and waiting for execution of the interrupt service routine (which may be some time after the timeout instant if there are multiple interrupts in the system). By latching the EIUCNT register to the EETCNT, the user does not have to worry about changes in the EIUCNT register (due to additional encoder edges) prior to servicing of the EIU loop timer interrupt.

The other EET latch event is defined by clearing the EETLATCH bit of the EIUCTRL register. In this mode, whenever, the EIUCNT register is read by the DSP, the current value of the intermediate Interval Time register is latched to the EETT register and the contents of the encoder event timer are latched to the EETDELTAT register. The three registers, EIUCNT, EETT and EETDELTAT now contain the desired triplet of position/speed data required for the control algorithm. Note the difference from before, in that the encoder count value is now available in the EIUCNT register.

It is important to realize that the EETT, and EETDELTAT registers are only updated by either the timeout of the EIUTIMER register (if EETLATCH bit is set) or the act of reading the EIUCNT register (if the EETLATCH bit is cleared). Therefore, if the EETLATCH bit is set, the act of reading the EIUCNT register will not update the EETT and EETDELTAT registers. Following reset, Bit 4 of the EIUCTRL is cleared.

EET Status Register

There is a 1-bit EETSTAT register that indicates whether or not an overflow of the EET has occurred. If the time between successive velocity events is sufficiently long, it is possible that the encoder event timer will overflow. When this condition is detected, Bit 0 of the EETSTAT register is set and the EETT register is fixed at 0xFFFF. Reading the EETSTAT register clears the overflow bit and permits the EETT register to be updated at the next velocity event.

If an encoder direction reversal is detected by the EIU, the encoder event timer is set to 1 and the EETT register is set to its maximum 0xFFFF value. Subsequent velocity events will cause the EETT register to be updated with the correct value. If a value of 0xFFFF is read from the EETT register, Bit 0 of the EETSTAT register can be read to determine whether an overflow or direction reversal condition exists.

On reset the EETN, EETDIV, EETDELTAT and EETT registers are all cleared to zero. Whenever either the EETN or EETDIV registers are written to, the encoder event timer is reset to zero and the EETT register is set to zero.

Table VI. Fundamental Characteristics of Encoder Interface Unit of ADMC401 (At 26 MHz)

Parameter		Test Conditions	Min	Typ	Max	Unit
f_{ENC}	Encoder Input (EIA, EIB) Rate				4.33	MHz
f_{QUAD}	Quadrature Rate				17.3	MHz
	Encoder Loop Timer Timeout Rate		38.5			ns
					0.645	sec
T_{MINENC}	Minimum Encoder Pulsewidth	EIUFILTER = 0x00		116		ns
		EIUFILTER = 0x3F		7.39		µs

EIU/EET Registers

The structure and functionality of the EIU and EET registers are illustrated at the end of the data sheet. The characteristics of the EIU block at 26 MHz are given in Table VI.

PROGRAMMABLE DIGITAL INPUT/OUTPUT

OVERVIEW

The ADMC401 has 12 programmable digital input/output pins called PIO0 to PIO11. Each pin may be individually configured as either an input or an output. An associated data register may be used to read data from pins configured as inputs and write data to pins configured as outputs. In addition, each I/O line may be configured as an interrupt source. Both edge (rising and falling) and level (high and low) interrupts may be detected. Four of the PIO lines (PIO0 to PIO3) have dedicated vector addresses in the interrupt table. The remaining eight interrupts (PIO4 to PIO11) are multiplexed into a single additional interrupt vector location. The PIOFLAG register is used to determine which line caused the interrupt. In addition, all PIO lines may be alternatively configured as PWM trip sources. The PIOPWM register has dedicated bits that may be used to enable this function on each PIO line. In this mode, a low level on any pins configured as a PWM trip source shuts down the PWM in a manner identical to the $\overline{\text{PWMTRIP}}$ pin.

PIO CONFIGURATION

Each of the 12 programmable input/output lines may be configured as either an input or an output by programming the appropriate bits of the PIODIR register. This 12-bit register has one bit associated with each I/O line; Bit 0 corresponds to PIO0, etc. Clearing a bit in the PIODIR register will configure the corresponding pin as an input line. Conversely, setting a bit configures the pin as an output pin. On reset, all bits of the PIODIR register are cleared so that all 12 PIO pins are configured as inputs. In addition, all PIO lines have internal pull-down resistors in the ADMC401 so that unconnected lines are seen as low level inputs.

PIO DATA READING/WRITING

Associated with the PIO system is a data register, PIODATA, that also has a bit associated with each I/O line. Data written to the PIODATA register will appear on those pins configured as outputs. Reading the PIODATA register will read the data from those pins configured as inputs.

PIO INTERRUPT GENERATION

Each of the 12 PIO lines may be configured as an interrupt source. Four of the PIO lines, PIO0 to PIO3, have dedicated interrupt vector locations, whereas the remaining eight are multiplexed into an additional interrupt vector. The PIOINTEN register is used to enable or disable the interrupt mode on the PIO4 to PIO11 lines. The PICMASK register of the programmable interrupt controller is used to enable interrupts on the four dedicated PIO lines, PIO0 to PIO3, and to enable the usage of PIOINTEN for interrupts on the other PIOs.

Interrupts may be generated on either edge (rising or falling) or level (high or low) events by programming the appropriate bits of both the PIOMODE and PIOLEVEL registers. Both registers have a dedicated bit for each of the twelve PIO lines. Setting the appropriate bit of the PIOMODE register configures the interrupt as level sensitive whereas clearing the bit configures the interrupt for edge sensitive. In level-sensitive mode (PIOMODE bit is 1), setting the corresponding bit in the PIOLEVEL register configures the interrupt as active high, whereas clearing the bit configures it for active low. In edge-sensitive mode (PIOMODE bit is 0), setting the corresponding bit of the PIOLEVEL register configures the interrupt for rising edge, whereas clearing the bit configures the interrupt for falling edge. On reset, all PIO interrupts are disabled.

The four dedicated PIO interrupts from PIO0 to PIO3 have interrupt vector addresses at program memory addresses 0x0048 for PIO0, 0x004C for PIO1, 0x0050 for PIO2 and 0x0054 for PIO3. In the event of an interrupt on PIO4 to PIO11, the corresponding bit of the PIOFLAG register is set and the general PIO interrupt is activated. This interrupt has a dedicated vector address at location 0x003C. In the interrupt service routine for this interrupt, the user must poll the PIOFLAG register to determine which of the PIO4 to PIO11 lines, that have interrupts enabled, caused the interrupt. Of course, if only one of the PIO4 to PIO11 lines has interrupts enabled, no polling is necessary.

PIO lines that are configured as outputs may also be used to generate interrupts. If, for example, one of the PIO lines is configured simultaneously as an output and as an interrupt source, writing the appropriate data sequence to that line will trigger an interrupt.

PIO AS $\overline{\text{PWMTRIP}}$ SOURCES

By setting the appropriate bits of the PIOPWM register, each of the twelve PIO lines can be configured as a PWM shutdown source. In this mode, a low level on the PIO pin will cause a PWM shutdown command that will disable all six PWM outputs on AH to CL. Since the disabling of the PWM is independent of the DSP clock, so that the PWM stage can be fully protected even in the event of a loss of clock signal to the DSP. In addition, a PWMTRIP interrupt will be generated when the PWM is shutdown. However, it is also possible to generate the normal PIO interrupts on the occurrence of a falling-edge on the PIO line. The advantage of this highly flexible structure for PWM shutdown is that multiple fault signals could be applied to the ADMC401 at different PIO lines. The occurrence of a falling-

edge on any of them will instantaneously shut down the PWM. However, based on the particular PIO interrupt that is flagged, the user can easily determine the source of the shutdown. This permits the action of the interrupt service routines following a PWM shutdown to be tailored to the particular fault that occurred.

On reset, all PIO lines are configured as PWM shutdown sources. Because all PIO lines are also configured as inputs and have internal pull-down resistors, any unconnected PIO lines will cause a PWM shutdown. Therefore, prior to using the PWM system of the ADMC401, it is imperative that the PIO stage be correctly configured for the particular application.

PIO REGISTERS

The configuration of all registers associated with the PIO system of the ADMC401 are shown at the end of the data sheet. Each of the registers has a bit directly associated with one of the PIO lines. For example, Bit 0 of all registers affects only the PIO0 line of the ADMC401.

EVENT TIMERS

OVERVIEW

The ADMC401 contains a dual channel event timer (capture) unit (ETU) that may be used to accurately measure the elapsed time between defined instants on a particular channel. The ETU has two dedicated input pins, ETU0 and ETU1. The ETU system contains a set of 16-bit data registers that are used to store the value of the dedicated ETU timer on the occurrence of defined events on the input pins. A configuration register is used to define the nature of the events on each of the input pins. In addition, a control register is used to initiate event capture on the inputs. A status register may be read to determine the state of the two capture channels. A dedicated ETU interrupt may be generated upon completion of a capture sequence on either the ETU0 or ETU1 channels. An event may be defined as either a rising or falling edge on the associated ETU0 and ETU1 input pins. Therefore, the ETU system can be used to compute the frequency, period, duty cycle or on-time of signals applied at the inputs. A block diagram of the ETU system of the ADMC401 is shown in Figure 32.

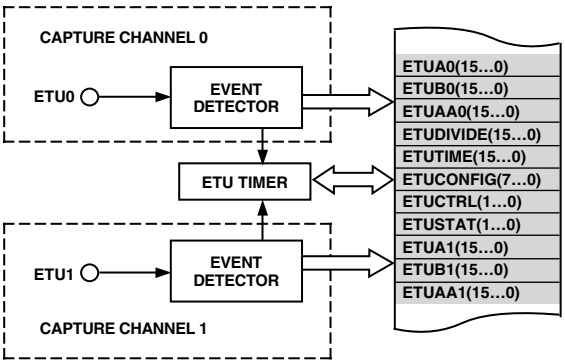

Figure 32. Functional Block Diagram of Event Timer Unit of ADMC401

ETU EVENT DEFINITION

The ETU system of the ADMC401 contains a dedicated 16-bit timer whose clock frequency may be programmed using the ETUDIVIDE register. This register divides the CLKOUT frequency to provide the clock signal for the ETU timer. The clock frequency of the ETU timer may be expressed as f_{CLKOUT}/ETUDIVIDE and is common to both channels. At any time, the contents of the ETU timer may be read in the 16-bit read only ETUTIME register.

Two events are used to trigger the ETU, termed Event A and Event B. By setting the appropriate bits of the ETUCONFIG register, it is possible to define both events A and B as either rising or falling edges on the appropriate pin. For example, setting Bit 0 of the ETUCONFIG register defines Event A of the ETU0 channel as a rising edge on the ETU0 pin. Similarly, setting Bit 4 of the ETUCONFIG register defines Event A of the ETU1 channel as a rising edge on the ETU1 pin. Event A defines the start of the event capture sequence. Associated with each ETU channel are three data registers, ETUA0, ETUB0 and ETUAA0 for ETU Channel 0 and ETUA1, ETUB1 and ETUAA1 for ETU Channel 1. These data registers store the ETU timer value on the occurrence of the first A event, the first B event and the second A event, respectively. For example, for ETU Channel 0, ETUA0 stores the timer value on the first occurrence of Event A on the ETU0 pin, ETUB0 stores the timer value on the first occurrence of Event B on the ETU0 pin and ETUAA0 store the timer value on the second occurrence of Event A on the ETU0 pin. Registers ETUA1, ETUB1 and ETUAA1 perform the same function for events on ETU Channel 1.

ETU INTERRUPT GENERATION

The completion of the event capture sequence can be defined as either the occurrence of Event B or the second occurrence of Event A by setting the appropriate bits of the ETUCONFIG register. At the end of the capture sequence, the ETU generates an interrupt. For example, if Bit 2 of the ETUCONFIG register is set, ETU Channel 0 will generate an ETU interrupt on the occurrence of Event B on the ETU0 pin. On the other hand, if Bit 6 of the ETUCONFIG register is cleared, ETU Channel 1 will generate an ETU interrupt on the occurrence of the second Event A on the ETU1 pin. Both ETU channels generate the same interrupt to the DSP when capture is complete. If both ETU channels are used simultaneously, the ETUSTAT register can be polled to determine the status of both channels and determine which caused the interrupt. If capture on ETU Channel 0 is complete, Bit 0 of the ETUSTAT register is set. Similarly, if event capture on ETU Channel 1 is complete, Bit 1 of the ETUSTAT register is set. Reading the ETUSTAT register automatically clears all bits of the register.

ETU OPERATING MODES

The ETU channels of the ADMC401 can operate in two distinct modes; single shot and free-running. The particular mode may be selected for ETU Channel 0 by programming Bit 3 of the ETUCONFIG register and for ETU Channel 1 by programming Bit 7 of the ETUCONFIG register. Setting these bits puts the respective ETU channel in free-running mode while clearing the bits enables the single-shot mode. In single-shot mode, upon completion of the capture sequence and consequent generation of the interrupt, further event capture is disabled until the interrupt has been serviced and the appropriate bit of the ETUCTRL register has been set. Setting Bit 0 of the ETUCTRL register restarts the capture for ETU Channel 0, while Bit 1 restarts capture for Channel 1. In the free-running mode, the bits of the ETUCTRL register remain set and the ETU channel continues to capture following the generation of the interrupt.

ETU REGISTERS

The configuration of the ETU registers is shown at the end of the data sheet.

AUXILIARY PWM TIMERS

The ADMC401 provides two variable-frequency, variable duty-cycle, 8-bit, auxiliary PWM outputs that are available at the AUX1 and AUX0 pins. These auxiliary PWM outputs can be used to provide switching signals to other circuits in a typical motor control system such as power factor corrected front-end converters or other switching power converters. Alternatively, by addition of a suitable filter network, the auxiliary PWM output signals can be used as simple single-bit digital-to-analog converters.

The auxiliary PWM system of the ADMC401 can operate in two different modes, *independent mode* or *offset mode*. The operating mode of the auxiliary PWM system is controlled by Bit 8 of the MODECTRL register. Setting Bit 8 of the MODECTRL register places the auxiliary PWM system in the independent mode. In this mode, the two auxiliary PWM generators are completely independent, and separate switching frequencies and duty cycles may be programmed for each auxiliary PWM output. In this mode, the 8-bit AUXTM0 register sets the switching frequency of the signal at the AUX0 output pin. Similarly, the 8-bit AUXTM1 register sets the switching frequency of the signal at the AUX1 pin. The fundamental time increment for the auxiliary PWM outputs is twice the DSP instruction rate (or $2t_{CK}$) so that the corresponding switching periods are given by:

$$T_{AUX0} = 2 \times (AUXTM0 + 1) \times t_{CK}$$

$$T_{AUX1} = 2 \times (AUXTM1 + 1) \times t_{CK}$$

Since the values in both AUXTM0 and AUXTM1 can range from 0 to 0xFF, the achievable switching frequency of the auxiliary PWM signals may range from 50.8 kHz to 13 MHz for a CLKOUT frequency of 26 MHz.

The on-time of the two auxiliary PWM signals are programmed by the two 8-bit AUXCH0 and AUXCH1 registers, according to:

$$T_{ON,\ AUX0} = 2 \times AUXCH0 \times t_{CK}$$

$$T_{ON,\ AUX1} = 2 \times AUXCH1 \times t_{CK}$$

so that output duty cycles from 0% to 100% are possible. Duty cycles of 100% are produced if the on-time value exceeds the period value. Typical auxiliary PWM waveforms in independent mode are shown in Figure 33(a).

When Bit 8 of the MODECTRL register is cleared, the auxiliary PWM channels are placed in offset mode. In offset mode, the switching frequency of the two signals on the AUX0 and AUX1 pins are identical and controlled by AUXTM0 in a manner similar to that previously described for independent mode. The on-times of both the AUX0 and AUX1 signals are controlled by the AUXCH0 and AUXCH1 registers as before. However, in this mode, the AUXTM1 register defines the offset time from the rising edge of the signal on the AUX0 pin to that on the AUX1 pin, according to:

$$T_{OFFSET} = 2 \times (AUXTM1 + 1) \times t_{CK}$$

For correct operation in this mode, the value written to the AUXTM1 register *must be* less than the value written to the AUXTM0 register. Typical auxiliary PWM waveforms in offset mode are shown in Figure (33)b. Again, duty cycles from 0% to 100% are possible in this mode.

In both operating modes, the resolution of the auxiliary PWM system is 8-bit *only* at the minimum switching frequency (AUXTM0 = AUXTM1 = 255 in independent mode, AUXTM0 = 255 in offset mode). Obviously, as the switching frequency is increased, the resolution is reduced.

Values can be written to the auxiliary PWM registers at any time. However, new duty cycle values written to the AUXCH0 and AUXCH1 registers only become effective at the start of the next cycle. Writing to the AUXTM0 and AUXTM1 registers causes the internal timers to be reset to 0 and new PWM cycles to begin, only in independent mode.

By default, following reset, Bit 8 of the MODECTRL register is cleared and offset mode is enabled. AUXTM0 and AUXTM1 default to 0xFF corresponding to minimum switching frequency and zero offset. The on-time registers AUXCH0 and AUXCH1 default to 0x00.

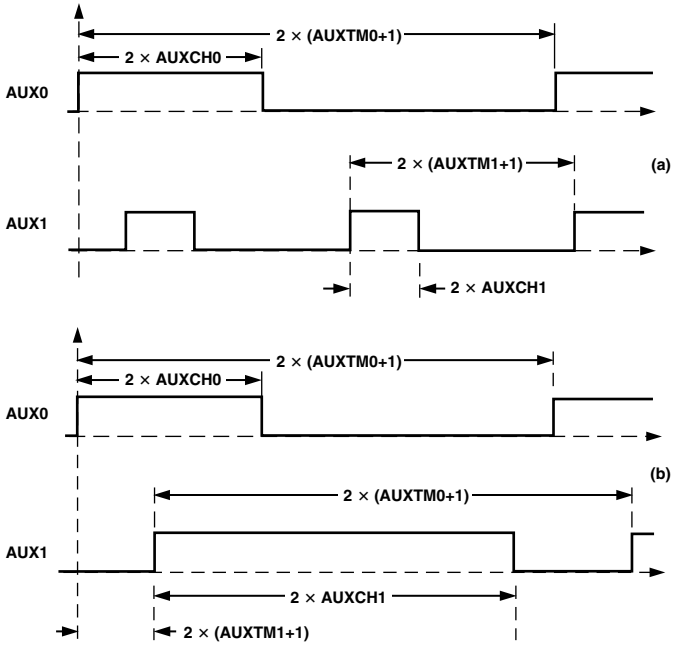

Figure 33. Typical Auxiliary PWM Signals in (a) Independent Mode and (b) Offset Mode

AUXILIARY PWM REGISTERS

The registers of the auxiliary PWM system are illustrated at the end of the data sheet.

WATCHDOG TIMER

OVERVIEW

The watchdog timer is used as a protection mechanism against unintentional software events causing the DSP to become stuck in infinite loops. It can be used to cause a complete DSP and peripheral reset in the event of such a software error. The watchdog timer consists of a 16-bit timer that is clocked at the CLKIN rate, t_{CKI}.

The watchdog timer is disabled after a master reset ($\overline{RESET}$ = LO). This also resets the WDFLAG bit in the SYSSTAT register. The watchdog timer is enabled by writing a TIMEOUT value to the WDTIMER register. Once the watchdog timer has been initialized, the timer is decremented at the CLKIN rate. In order to prevent a watchdog timer trip, it is necessary to write again to the WDTIMER register. For all writes to the WDTIMER register (subsequent to the initial write), it is unimportant which value is written. The act of writing to the WDTIMER register automatically reloads the initial TIMEOUT value. If the watchdog timer is not rewritten to after an interval:

$$T_{WDT} = \text{WDTIMER} \times t_{CKI}$$

the watchdog timer will decrement to zero and a watchdog trip will be generated. In this case, a complete reset of the DSP core and motor control peripherals (except the watchdog timer itself) is initiated and Bit 1 of the SYSSTAT register (WDFLAG) is set. Following a reset, the DSP core can determine if the reset was caused by a watchdog trip (and if so take appropriate action) or if it was due to the normal reset sequence. The watchdog timer remains disabled while the WDFLAG is set to prevent continuous watchdog trips. The watchdog timer can be restarted and the WDFLAG reset by writing a nonzero TIMEOUT value to the WDTIMER register. The WDFLAG will be reset, but the watchdog timer will remain disabled if 0x0000 is written to the WDTIMER register.

The watchdog timer is only reset by a low input on the $\overline{RESET}$ pin. The watchdog circuit is not reset by a software controlled Peripheral Reset.

PROGRAMMABLE INTERRUPT CONTROLLER

OVERVIEW

The ADMC401 uses the $\overline{IRQ2}$ pin of the DSP core to generate a peripheral interrupt. There are multiple sources of peripheral interrupts, e.g., the ADC block, PIO block, EIU block, ETU block and PWM block. A Programmable Interrupt Controller (PIC) is used to avoid a software latency in determining the source of the interrupt. With the occurrence of an interrupt from the peripheral blocks, the PIC block generates an address that points to the corresponding vector address in the DSP vector table. The PIC consists of an output register, PICVECTOR, that contains a pointer to an entry in the DSP vector table. During normal operation, an interrupt service routine (ISR) located at vector address 0x0004 (or the $\overline{IRQ2}$/peripheral interrupt) jumps to the address pointed to by the PICVECTOR register. The necessary code to perform this jump from address 0x0004 is automatically placed there by the internal ROM code when MMAP = BMODE = 1.

The vector addresses between 0x00 and 0x2C are reserved for the DSP core interrupts. The vector table addresses from PM(0x30) to PM(0x58) are reserved for use by peripheral interrupt service routines. Each vector address occupies four addresses of PM. The priority of the peripheral interrupts is fixed in hardware. The ISR at address PM(0x30) has the highest priority whereas the ISR at address PM(0x58) has the lowest.

In the case of multiple simultaneous interrupts, the PIC will load the PICVECTOR register with the interrupt that has the highest priority. Between reads of the PICVECTOR register (while the DSP is servicing other interrupts for example) PICVECTOR is updated with the highest priority of any peripheral interrupts. This ensures that when the $\overline{IRQ2}$ is reasserted, the highest priority interrupt that occurred since the last reading of the PICVECTOR register is now waiting to be serviced.

When PICVECTOR is read, if another interrupt is pending in the PIC, then the $\overline{IRQ2}$ line to the DSP remains LO and no edge will be seen. In order to catch all interrupts, $\overline{IRQ2}$ interrupts should be configured as level sensitive in the ICNTL register.

The four least significant PIO pins are assigned unique vector addresses. An interrupt on any of the remaining eight lines (PIO4 to PIO11) will trigger a separate fifth PIO interrupt that has its own vector address. The PIOFLAG register can be read to determine the exact source of this fifth interrupt. An 11-bit PICMASK register can be used to enable or disable any or all of the eleven peripheral interrupt sources. The program memory address reserved for each of the interrupts is summarized in Table VII.

Table VII. Interrupt Vector Addresses

Function	Vector Address
$\overline{RESET}$ Startup (or Power Up with PUCR = 1)	0x00 (Highest Priority)
Power-Down (Nonmaskable)	0x2C
ADC End-of-Conversion Interrupt	0x30
PWMSYNC Interrupt	0x34
EIU Loop Timer Timeout Interrupt	0x38
PIO4 to PIO11 Interrupt	0x3C
EIU Counter Error Interrupt	0x40
ETU Interrupt	0x44
PIO0 Interrupt	0x48
PIO1 Interrupt	0x4C
PIO2 Interrupt	0x50
PIO3 Interrupt	0x54
PWM Trip Interrupt	0x58
SPORT0 Transmit	0x10
SPORT0 Receive	0x14
Software Interrupt 1	0x18
Software Interrupt 0	0x1C
SPORT1 Transmit (or $\overline{IRQ1}$)	0x20
SPORT1 Receive (or $\overline{IRQ0}$)	0x24
Interval Timer Interrupt	0x28 (Lowest Priority)

Interrupt Masking

Interrupt masking (or disabling) is controlled by the IMASK register of the DSP core and the PICMASK register. These registers contain individual bits that must be set to enable the various interrupt sources. It is important to remember that if any peripheral interrupt is to be enabled both the $\overline{IRQ2}$ interrupt enable bit (Bit 9) of the IMASK register and the appropriate bit of the PICMASK register must be set. The configuration of both the IMASK and PICMASK registers of the ADMC401 is shown at the end of the data sheet.

Interrupt Configuration

The IFC and ICNTL registers of the DSP core control and configure the interrupt controller of the DSP core. The IFC register is a 16-bit register that may be used to force and/or clear any of the eight DSP interrupts. Bits 0 to 7 of the IFC register may be used to clear the DSP interrupts while Bits 8 to 15 can be used to force a corresponding interrupt. Writing to Bits 11 and 12 in IFC is the only way to create the two software interrupts.

The ICNTL register is used to configure the sensitivity (edge or level) of the $\overline{IRQ0}$, $\overline{IRQ1}$ and $\overline{IRQ2}$ interrupts and to enable/disable interrupt nesting. Setting Bit 0 of ICNTL configures the $\overline{IRQ0}$ as edge sensitive while clearing the bit configures it for level sensitive. Bit 1 is used to configure the $\overline{IRQ1}$ interrupt and Bit 2 is used to configure the $\overline{IRQ2}$ interrupt. It is recommended that the $\overline{IRQ2}$ interrupt be always configured for level sensitive as this ensures that no peripheral interrupts are lost. Setting Bit 4 of the ICNTL register enables interrupt nesting. The configuration of both IFC and ICNTL registers is shown at the end of the data sheet.

Interrupt Operation

Following a reset (with ROMENABLE = 1), the ROM code monitor of the ADMC401 copies a default interrupt vector table into program memory RAM from address 0x0000 to 0x005F. Since each interrupt source has a dedicated four word space in this vector table, it is possible to code short interrupt service routines (ISR) in place. Alternatively, it may be required to insert a JUMP instruction to the appropriate start address of the interrupt service routine if more memory is required for the ISR.

On the occurrence of an interrupt, the program sequencer ensures that there is no latency (beyond synchronization delay) when processing unmasked interrupts. In the case of the timer, SPORT0, SPORT1 and software interrupts, the interrupt controller automatically jumps to the appropriate location in the interrupt vector table. At this point, a JUMP instruction to the appropriate ISR is required.

In the event of a motor control peripheral interrupt, the operation is slightly different. For any of the eleven peripheral interrupts, the interrupt controller automatically jumps to location 0x0004 in the interrupt vector table. In addition, the required vector address (between 0x0030 and 0x0058) associated with the particular interrupt source is placed in the PICVECTOR register of the PIC block. Code loaded at location 0x0004 by the monitor on reset subsequently performs a JUMP from location 0x0004 to the address specified in the PICVECTOR register. This operation with the PICVECTOR register results in a slightly longer latency associated with processing any of the peripheral interrupts, as compared with the latency of the internal DSP core interrupts.

The code located at location 0x0004 by the monitor on reset is as follows:

```
0x0004: DM (I4_SAVE) = I4;
        I4 = DM (PICVECTOR);
        JUMP (I4);
```

The default code for each of the motor control peripherals is:

```
        I4 = DM (I4_SAVE);
        RTI;
```

Note that this default restores I4 to its value before the interrupt. The user should replace the RTI with a JUMP to their ISR. The PUT_VECTOR ROM subroutine can be used to replace the RTI with the JUMP.

The PIC block manages the sequencing of the eleven motor control peripheral interrupts. In the case of multiple simultaneous interrupts, the PIC will load the PICVECTOR register with the vector address of the highest priority pending interrupt. The contents of the PICVECTOR register will remain fixed until read by the DSP. This action is performed by the default DSP code at location 0x0004. The PIC block only asserts a new interrupt after the PICVECTOR register has been read. For other settings of MMAP and BMODE the user must correctly configure the vector table.

SYSTEM CONTROLLER

MODECTRL REGISTER

The MODECTRL register controls three important features of the ADMC401. It internally configures the SPORT1 pins for boot loading and UART debugging. Dedicated bits in the MODECTRL register also control the operating mode of the PWM generation unit (single or double update mode) and the operating mode of the auxiliary PWM generation unit (independent or offset mode).

Two bits of the MODECTRL register control the internal configuration of the SPORT1 pins as illustrated in Figure 34. Bit 4 (DR1SEL) selects which of the two external receive pins (DR1A or DR1B) is connected to the internal data receive port of the DSP core. Clearing Bit 4 selects the DR1A pin, whereas setting Bit 4 selects the DR1B pin. Following reset, Bit 4 is cleared so that DR1A is selected.

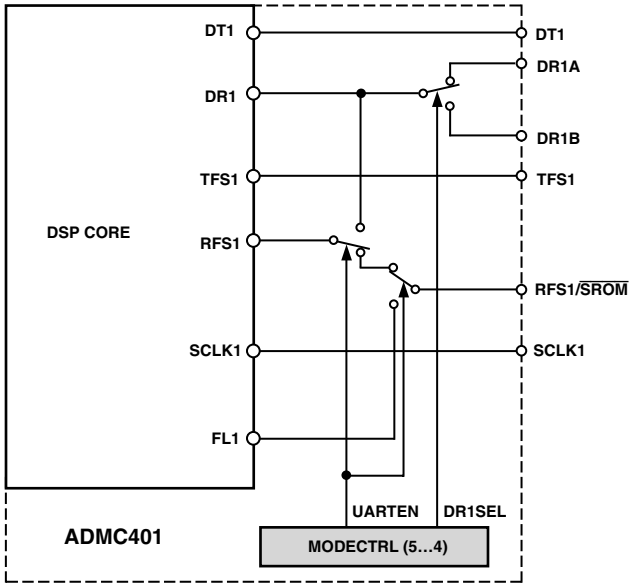

Figure 34. Internal Multiplexing of SPORT1 Pins

Bit 5 (UARTEN) of the MODECTRL register is used to select between UART and SPORT mode of SPORT1. Setting the UARTEN bit connects DR1A to the RFS1 input which allows SPORT1 to be used as a UART port. Additionally, the internal FL1 flag of the DSP core is connected to the RFS1/$\overline{SROM}$ pin of the ADMC401, to be used as a reset for the external serial

ROM or E^2PROM. Clearing the UARTEN bit selects SPORT mode, so that SPORT1 is configured in a manner identical to the standard serial ports of the ADSP-21xx family. Following reset, the UARTEN bit is cleared so that SPORT mode is selected.

Bit 6 of the MODECTRL register is used to select between single update and double update operating modes of the PWM generation unit. Clearing this bit selects single update mode, while setting it selects double update mode. Following reset, this bit is cleared so that single update mode is the default configuration.

Bit 8 of the MODECTRL register is used to select between independent and offset operating modes of the auxiliary PWM unit. Clearing this bit selects offset mode, while setting it selects independent mode. Following reset, this bit is cleared so that offset mode is the default configuration.

SYSSTAT REGISTER

The SYSSTAT register provides various status information of the ADMC401, such as the state of the $\overline{\text{PWMTRIP}}$ pin, the state of the watchdog flag, the state of the PWMPOL pin and phase of the PWM

Bit 0 indicates the state of the $\overline{\text{PWMTRIP}}$ pin such that the bit is set if $\overline{\text{PWMTRIP}}$ is HI and cleared if the pin is LO. Similarly, Bit 2 indicates the state of the PWMPOL pin such that the bit is set if PWMPOL is HI (active high PWM selected) and cleared if the pin is LO (active low PWM selected).

Bit 1 is used to indicate if a watchdog timer timeout has occurred. This bit is set following a watchdog timeout and can be read on reset to determine if the reset is a normal power-on reset or due to a watchdog trip.

Bit 3 of the SYSSTAT register is used to identify the half cycle of operation of the PWM generation unit. During the first half cycle, when the internal PWM timer is decrementing, this bit is cleared. During the second half cycle, this bit is set while the timer is incrementing.

SYSTEM CONTROL REGISTERS

The configuration of the MODECTRL and SYSSTAT register is shown at the end of the data sheet.

PERIPHERAL AND DSP CORE REGISTERS

The address, name, type, used bits and reset value of all of the peripheral registers of the ADMC401 are given in Table VIII. Similarly, the DSP core registers of the ADMC401 are tabulated in Table IX.

Table VIII. Peripheral Register Map of the ADMC401

Address	Name	Type	Bits	Reset Value	Function
0x2000–0x2007					Reserved
0x2008	PWMTM	R/W	[15 . . . 0]	0x0000	PWM Period Register
0x2009	PWMDT	R/W	[9 . . . 0]	0x0000	PWM Deadtime Register
0x200A	PWMPD	R/W	[9 . . . 0]	0x0000	PWM Pulse Deletion Register
0x200B	PWMGATE	R/W	[9 . . . 0]	0x000	PWM Chopping Control
0x200C	PWMCHA	R/W	[15 . . . 0]	0x0000	PWM Channel A Duty Cycle Control
0x200D	PWMCHB	R/W	[15 . . . 0]	0x0000	PWM Channel B Duty Cycle Control
0x200E	PWMCHC	R/W	[15 . . . 0]	0x0000	PWM Channel C Duty Cycle Control
0x200F	PWMSEG	R/W	[8 . . . 0]	0x000	PWM Crossover and Output Enable
0x2010	AUXCH0	R/W	[7 . . . 0]	0x00	Aux. PWM Channel 0 Duty Cycle
0x2011	AUXCH1	R/W	[7 . . . 0]	0x00	Aux. PWM Channel 1 Duty Cycle
0x2012	AUXTM0	R/W	[7 . . . 0]	0xFF	Aux. PWM Channel 0 Period
0x2013	AUXTM1	R/W	[7 . . . 0]	0xFF	Aux. PWM Channel 1 Period
0x2014					Reserved
0x2015	MODECTRL	R/W	[8, 6 . . . 4]	0x000	Mode Control Register
0x2016	SYSSTAT	R	[3 . . . 0]		System Status Register
0x2017					Reserved
0x2018	WDTIMER	R/W	[15 . . . 0]		Watchdog Timer Register
0x2019–0x201B					Reserved
0x201C	PICVECTOR	R	[15 . . . 0]		Peripheral Interrupt Address
0x201D	PICMASK	R/W	[10 . . . 0]	0x000	Peripheral Interrupt Mask Register
0x201E–0x201F					Reserved
0x2020	EIUCNT	R/W	[15 . . . 0]	0x0000	Position Count Value
0x2021	EIUMAXCNT	R/W	[15 . . . 0]	0x0000	Maximum EIUCNT Value
0x2022	EIUSTAT	R	[7 . . . 0]		EIU Status Register
0x2023	EIUCTRL	R/W	[8 . . . 0]	0x000	EIU Control Register
0x2024	EIUPERIOD	R/W	[15 . . . 0]	0x0000	EIU Loop Timer Period Register
0x2025	EIUSCALE	R/W	[7 . . . 0]	0x00	EIU Loop Timer Scale Register
0x2026	EIUTIMER	R/W	[15 . . . 0]	0x0000	EIU Loop Timer Register
0x2027	EETCNT	R	[15 . . . 0]	0x0000	Latched Copy of EIUCNT
0x2028	EIUFILTER	R/W	[5 . . . 0]	0x00	EIU Filter Control Register
0x2029	EIZLATCH	R	[15 . . . 0]		EIZ Latch Register
0x202A	EISLATCH	R	[15 . . . 0]		EIS Latch Register
0x202B–0x202F					Reserved
0x2030	ADC0	R	[15 . . . 0]		ADC0 Data Register
0x2031	ADC1	R	[15 . . . 0]		ADC1 Data Register
0x2032	ADC2	R	[15 . . . 0]		ADC2 Data Register
0x2033	ADC3	R	[15 . . . 0]		ADC3 Data Register
0x2034	ADC4	R	[15 . . . 0]		ADC4 Data Register
0x2035	ADC5	R	[15 . . . 0]		ADC5 Data Register
0x2036	ADC6	R	[15 . . . 0]		ADC6 Data Register
0x2037	ADC7	R	[15 . . . 0]		ADC7 Data Register
0x2038	ADCCTRL	R/W	[4 . . . 3,0]	0x00	ADC Control Register
0x2039	ADCSTAT	R	[4 . . . 0]		ADC Status Register
0x203A					Reserved
0x203B	ADCXTRA	R	[15 . . . 0]		Extra ADC Data Register
0x203C	ADCOTR	R	[7 . . . 0]		ADC Out of Range Register
0x203D–0x203F					Reserved
0x2040	PIOLEVEL	R/W	[11 . . . 0]	0x000	PIO Interrupt Select
0x2041	PIOMODE	R/W	[11 . . . 0]	0x000	PIO Interrupt Edge/Level Select
0x2042	PIOPWM	R/W	[11 . . . 0]	0xFFF	PIO PWMTRIP Enable Register
0x2043					Reserved
0x2044	PIODIR	R/W	[11 . . . 0]	0x000	PIO Direction Control
0x2045	PIODATA	R/W	[11 . . . 0]		PIO Data Register

Address	Name	Type	Bits	Reset Value	Function
0x2046	PIOINTEN	R/W	[11 . . . 4]	0x000	PIO Interrupt Enable
0x2047	PIOFLAG	R	[11 . . . 4]		PIO Interrupt Flag (PIO4 to PIO11)
0x2048–0x204F					Reserved
0x2050	ETUA0	R	[15 . . . 0]		Event A Capture–Channel 0
0x2051	ETUB0	R	[15 . . . 0]		Event B Capture–Channel 0
0x2052	ETUAA0	R	[15 . . . 0]		Event AA Capture–Channel 0
0x2053	ETUA1	R	[15 . . . 0]		Event A Capture–Channel 1
0x2054	ETUB1	R	[15 . . . 0]		Event B Capture–Channel 1
0x2055	ETUAA1	R	[15 . . . 0]		Event AA Capture–Channel 1
0x2056	ETUTIME	R	[15 . . . 0]		ETU Timer Value
0x2057–0x205B					Reserved
0x205C	ETUCONFIG	R/W	[7 . . . 0]	0x00	ETU Configuration Register
0x205D	ETUDIVIDE	R/W	[15 . . . 0]	0x0000	ETU Clock Divide Register
0x205E	ETUSTAT	R	[1 . . . 0]		ETU Status Register
0x205F	ETUCTRL	R/W	[1 . . . 0]	0x0	ETU Control Register
0x2060	PWMSYNCWT	R/W	[7 . . . 0]	0x27	PWMSYNC Width Control
0x2061	PWMSWT	R/W	[0]	0x0	PWM Software Trip
0x2062–0x206F					Reserved
0x2070	EETN	R/W	[7 . . . 0]	0x00	EET Pulse Decimator Register
0x2071	EETDIV	R/W	[15 . . . 0]	0x0000	EET Clock Divider Register
0x2072	EETDELTAT	R	[15 . . . 0]	0x0000	EET Delta Timer Register
0x2073	EETT	R	[15 . . . 0]	0x0000	EET Timer Period Register
0x2074	EETSTAT	R	[0]	0x0	EET Status Register
0x2075–0x23FF					Reserved

Table IX. DSP Core Register Map of the ADMC401

Address	Name	Type	Bits	Function
0x3FFF	SYSCNTL	R/W	[15 . . . 0]	System Control Register
0x3FFE	MEMWAIT	R/W	[15 . . . 0]	Memory Wait State Control
0x3FFD	TPERIOD	R/W	[15 . . . 0]	Interval Timer Period Register
0x3FFC	TCOUNT	R/W	[15 . . . 0	Interval Timer Count Register
0x3FFB	TSCALE	R/W	[7 . . . 0]	Interval Timer Scale Register
0x3FFA	SPORT0_RX_WORDS1	R/W	[15 . . . 0]	SPORT0 Mutlichannel Word 1 Receive
0x3FF9	SPORT0_RX_WORDS0	R/W	[15 . . . 0]	SPORT0 Mutlichannel Word 0 Receive
0x3FF8	SPORT0_TX_WORDS1	R/W	[15 . . . 0]	SPORT0 Mutlichannel Word 1 Transmit
0x3FF7	SPORT0_TX_WORDS0	R/W	[15 . . . 0]	SPORT0 Mutlichannel Word 0 Transmit
0x3FF6	SPORT0_CTRL_REG	R/W	[15 . . . 0]	SPORT0 Control Register
0x3FF5	SPORT0_SCLKDIV	R/W	[15 . . . 0]	SPORT0 Clock Divide Register
0x3FF4	SPORT0_RFSDIV	R/W	[15 . . . 0]	SPORT0 Receive Frame Sync Divide
0x3FF3	SPORT0_AUTOBUF_CTRL	R/W	[15 . . . 0]	SPORT0 Autobuffer Control Register
0x3FF2	SPORT1_CTRL_REG	R/W	[15 . . . 0]	SPORT1 Control Register
0x3FF1	SPORT1_SCLKDIV	R/W	[15 . . . 0]	SPORT1 Clock Divide Register
0x3FF0	SPORT1_RFSDIV	R/W	[15 . . . 0]	SPORT1 Receive Frame Sync Divide
0x3FEF	SPORT1_AUTOBUF_CTRL	R/W	[15 . . . 0]	SPORT1 Autobuffer Control Register

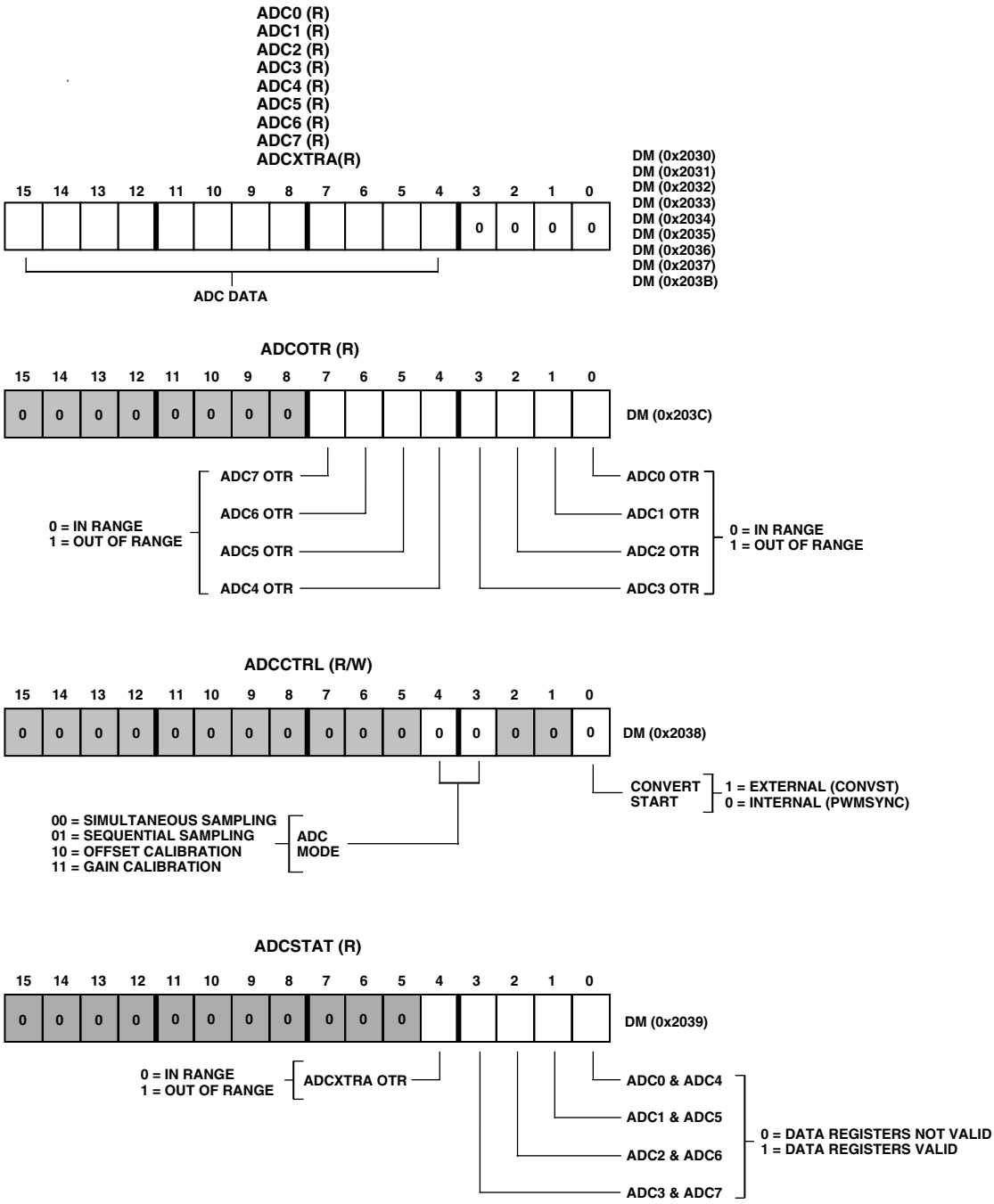

Figure 35. Structure of Registers of the ADMC401

Default bit values are shown; if no value is shown, the bit field is undefined at reset. Reserved bits are shown on a gray field—these bits should always be written as shown.

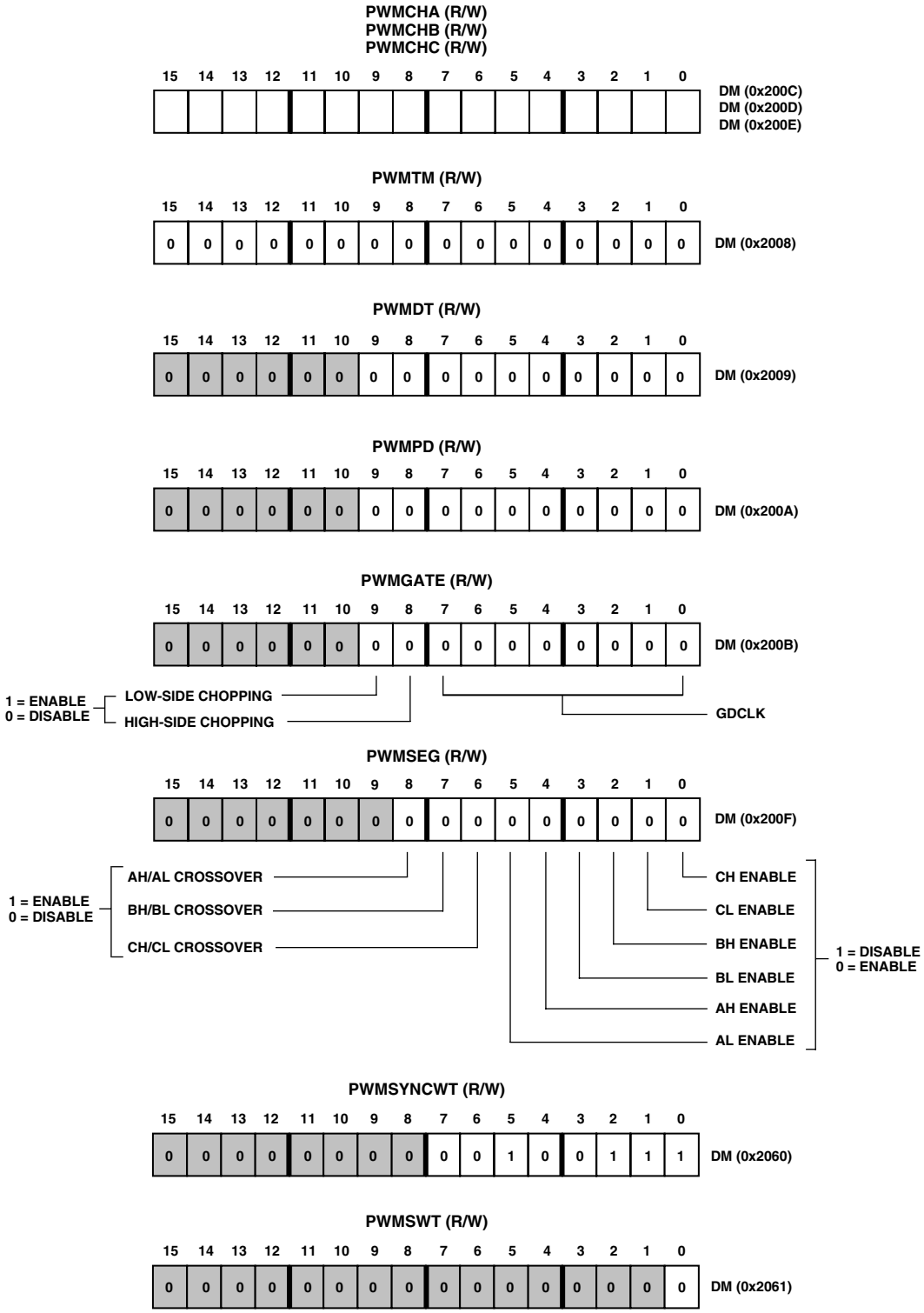

Figure 36. Structure of Registers of ADMC401

Default bit values are shown; if no value is shown, the bit field is undefined at reset. Reserved bits are shown on a gray field—these bits should always be written as shown.

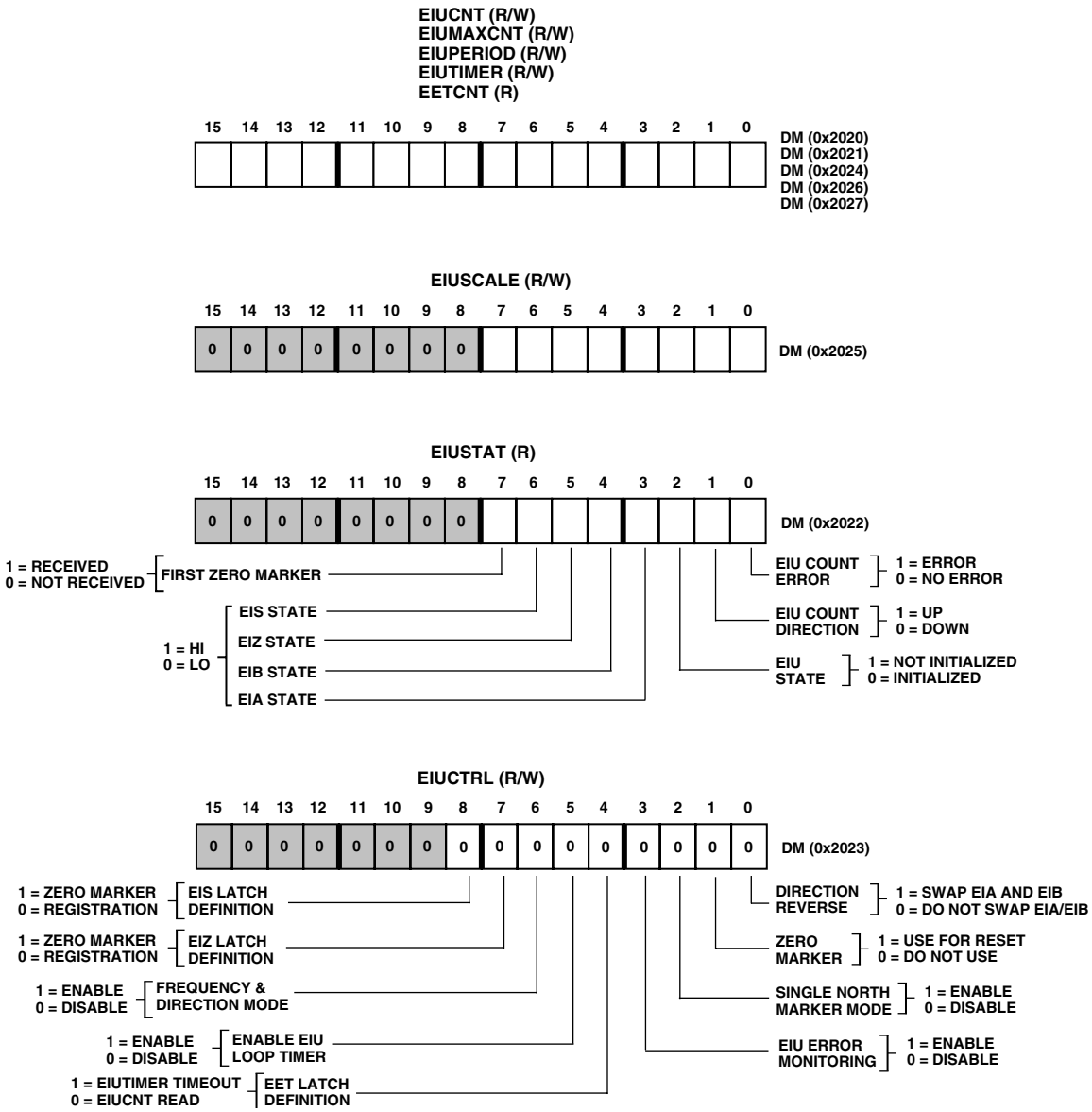

Figure 37. Structure of Registers of ADMC401

Default bit values are shown; if no value is shown, the bit field is undefined at reset. Reserved bits are shown on a gray field—these bits should always be written as shown.

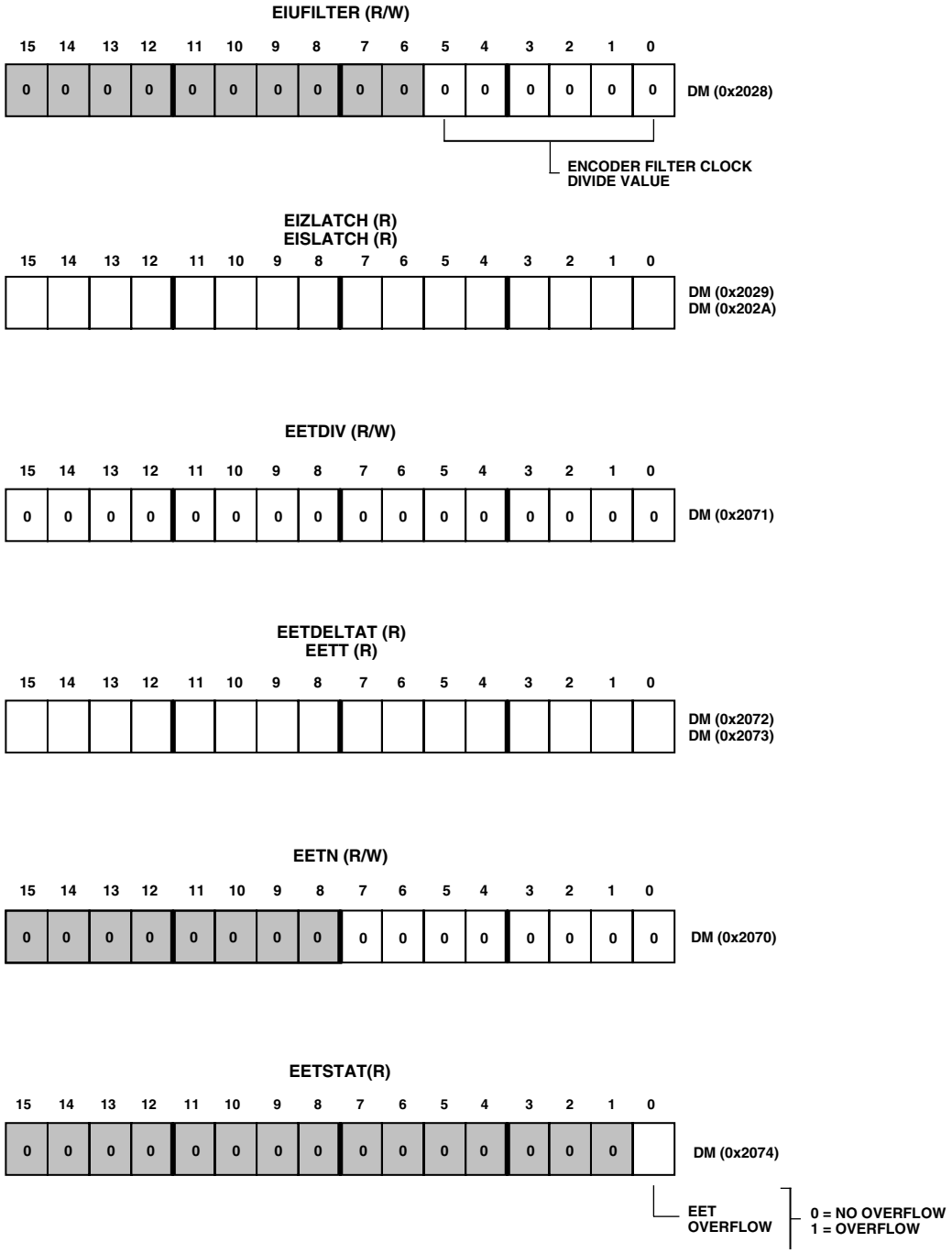

Figure 38. Structure of Registers of ADMC401

Default bit values are shown; if no value is shown, the bit field is undefined at reset. Reserved bits are shown on a gray field—these bits should always be written as shown.

PIOLEVEL (R/W)

0 = FALLING EDGE (PIOMODE = 0)
= ACTIVE LOW (PIOMODE = 1)
1 = RISING EDGE (PIOMODE = 0)
= ACTIVE HIGH (PIOMODE = 1)

15	14	13	12	11	10	9	8	7	6	5	4	3	2	1	0	
0	0	0	0	0	0	0	0	0	0	0	0	0	0	0	0	DM (0x2040)

PIOMODE (R/W)

0 = EDGE SENSITIVE
1 = LEVEL SENSITIVE

15	14	13	12	11	10	9	8	7	6	5	4	3	2	1	0	
0	0	0	0	0	0	0	0	0	0	0	0	0	0	0	0	DM (0x2041)

PIOPWM (R/W)

0 = PWM TRIP DISABLE
1 = PWM TRIP ENABLE

15	14	13	12	11	10	9	8	7	6	5	4	3	2	1	0	
0	0	0	0	1	1	1	1	1	1	1	1	1	1	1	1	DM (0x2042)

PIODIR (R/W)

0 = INPUT
1 = OUTPUT

15	14	13	12	11	10	9	8	7	6	5	4	3	2	1	0	
0	0	0	0	0	0	0	0	0	0	0	0	0	0	0	0	DM (0x2044)

PIODATA (R/W)

0 = LO LEVEL
1 = HI LEVEL

15	14	13	12	11	10	9	8	7	6	5	4	3	2	1	0	
0	0	0	0													DM (0x2045)

PIOINTEN (R/W)

0 = INTERRUPT DISABLE
1 = INTERRUPT ENABLE

15	14	13	12	11	10	9	8	7	6	5	4	3	2	1	0	
0	0	0	0	0	0	0	0	0	0	0	0	0	0	0	0	DM (0x2046)

PIOFLAG (R)

0 = NO INTERRUPT
1 = INTERRUPT FLAGGED

15	14	13	12	11	10	9	8	7	6	5	4	3	2	1	0	
0	0	0	0													DM (0x2047)

Figure 39. Structure of Registers of ADMC401

Default bit values are shown; if no value is shown, the bit field is undefined at reset. Reserved bits are shown on a gray field—these bits should always be written as shown.

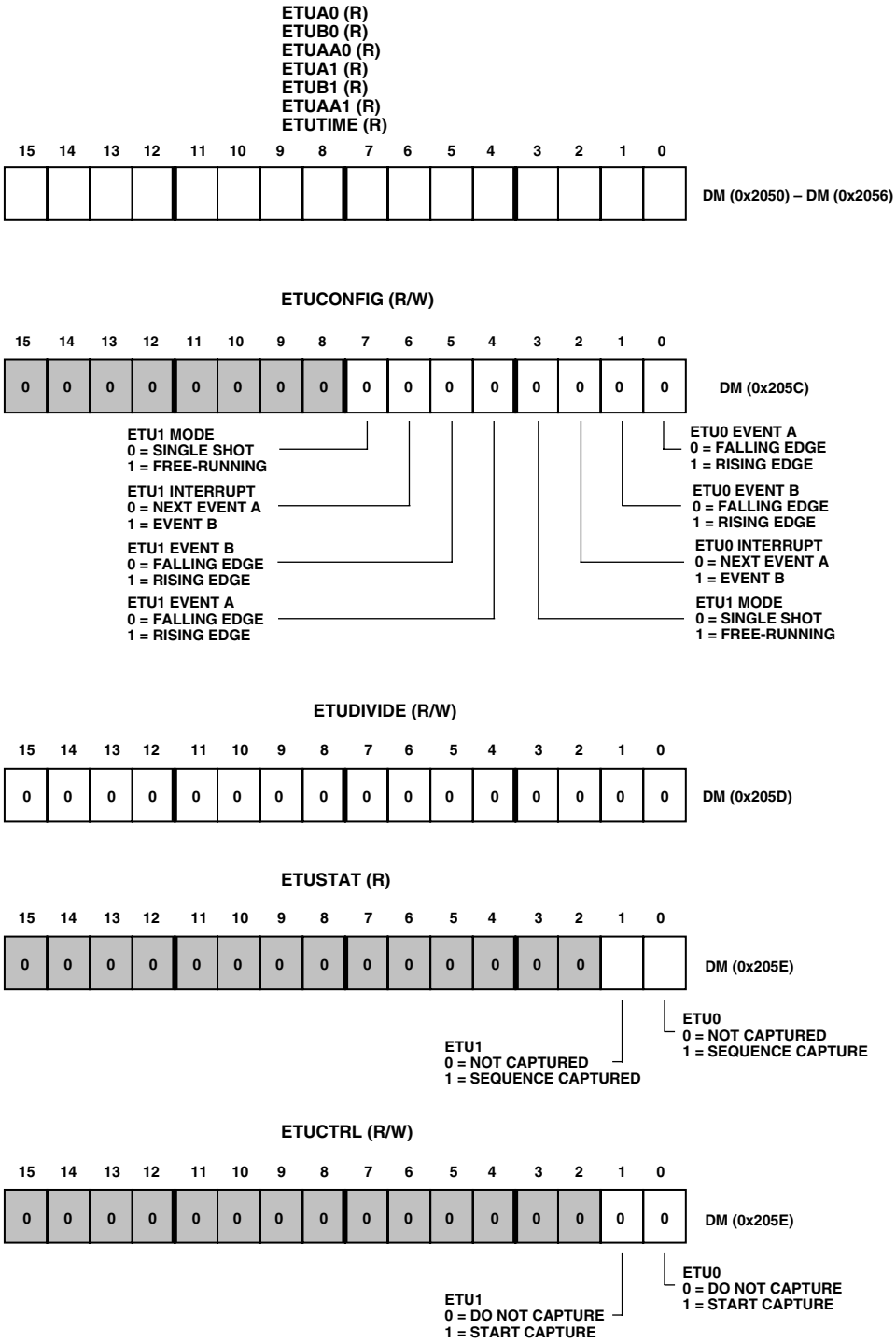

Figure 40. Structure of Registers of ADMC401

Default bit values are shown; if no value is shown, the bit field is undefined at reset. Reserved bits are shown on a gray field—these bits should always be written as shown.

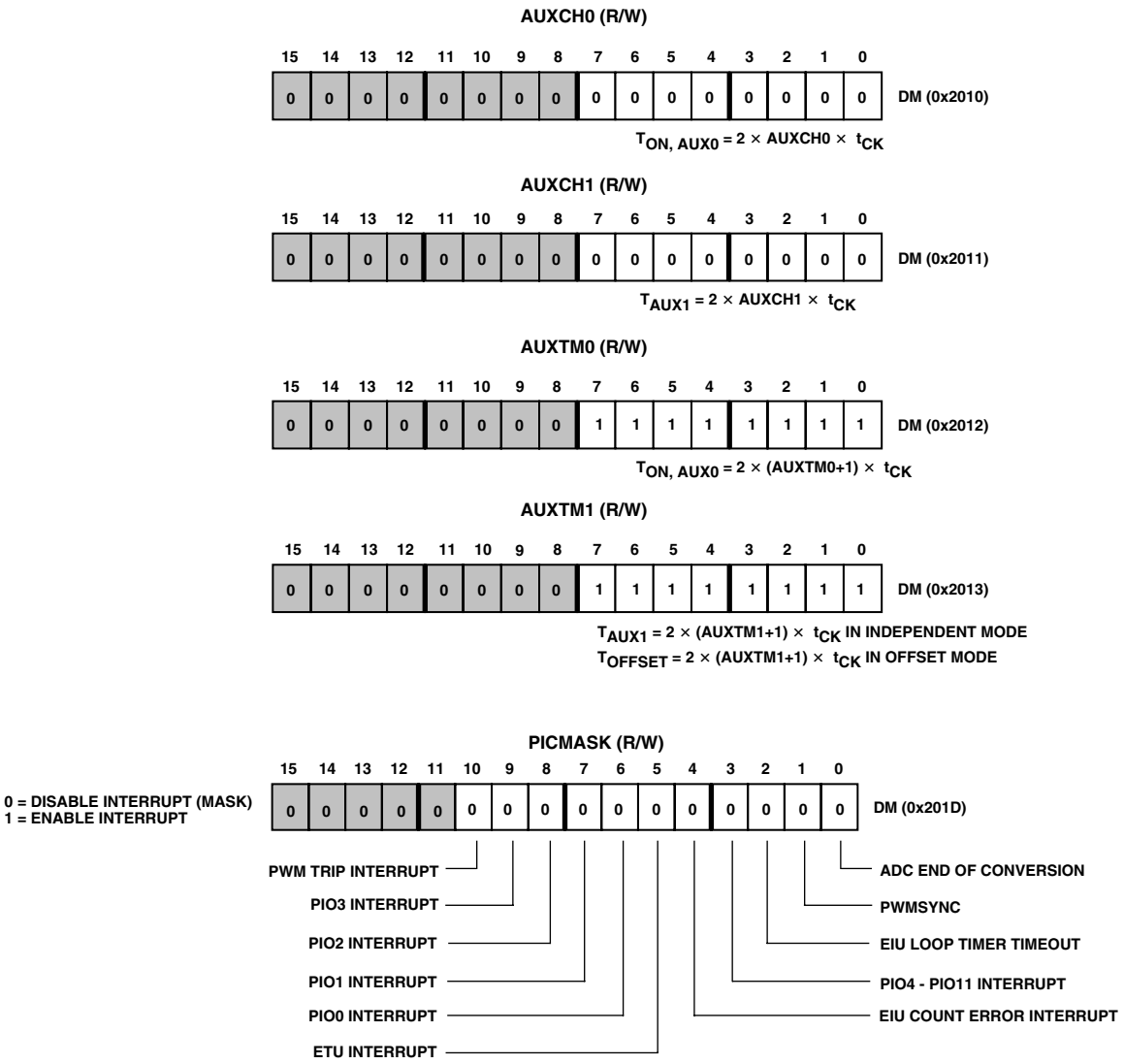

Figure 41. Structure of Registers of ADMC401

Default bit values are shown; if no value is shown, the bit field is undefined at reset. Reserved bits are shown on a gray field—these bits should always be written as shown.

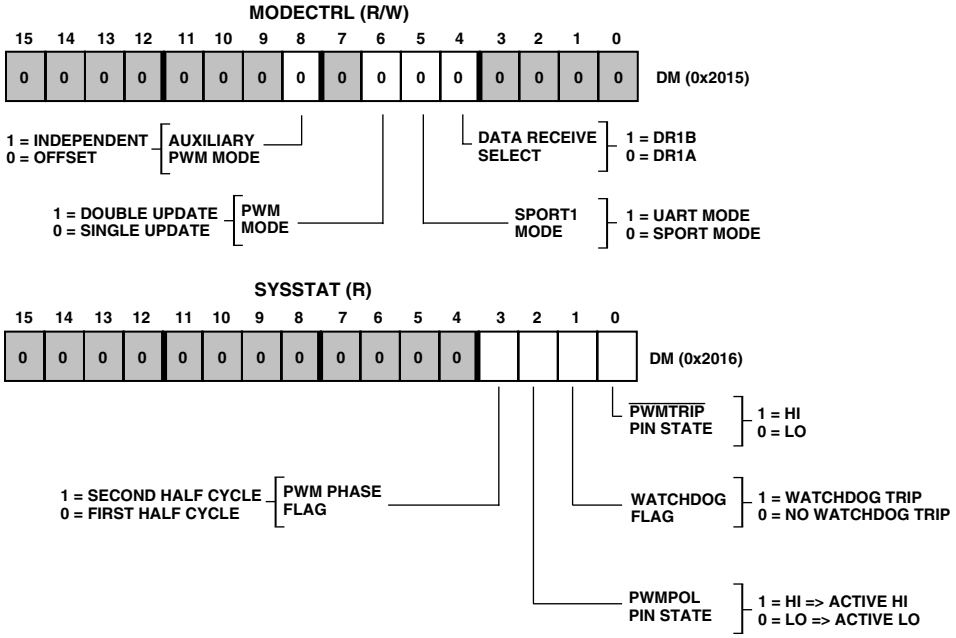

Figure 42. Structure of Registers of ADMC401

Default bit values are shown; if no value is shown, the bit field is undefined at reset. Reserved bits are shown on a gray field—these bits should always be written as shown.

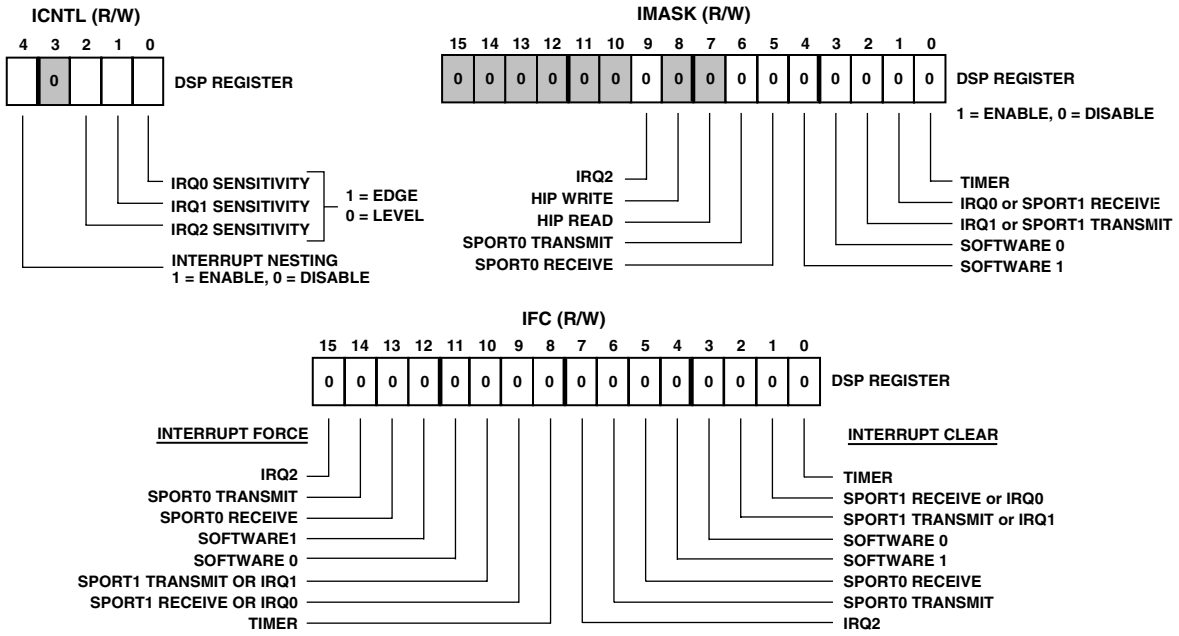

Figure 43. Structure of Registers of ADMC401

Default bit values are shown; if no value is shown, the bit field is undefined at reset. Reserved bits are shown on a gray field—these bits should always be written as shown.

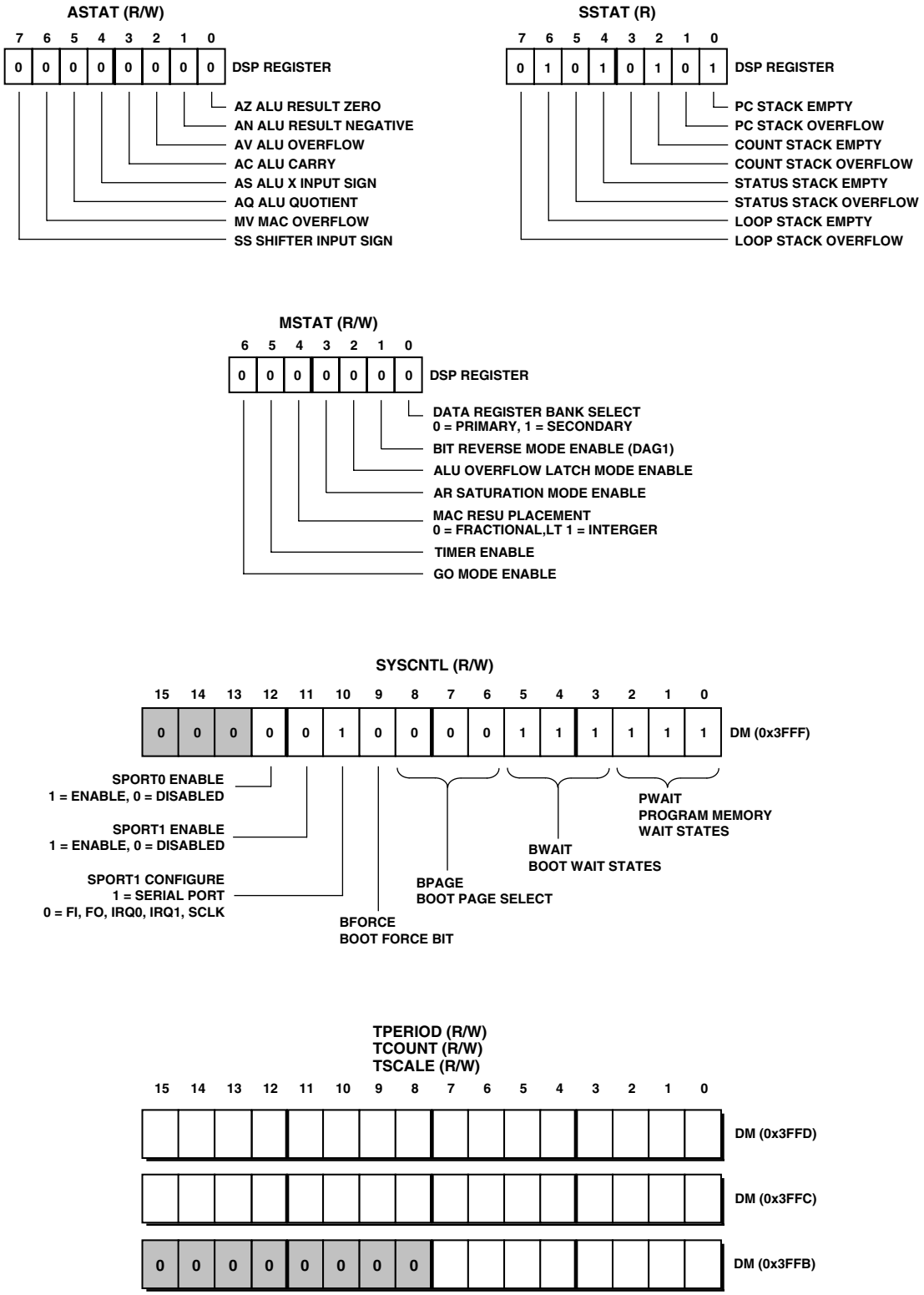

Figure 44 Structure of Registers of ADMC401

Default bit values are shown; if no value is shown, the bit field is undefined at reset. Reserved bits are shown on a gray field—these bits should always be written as shown.

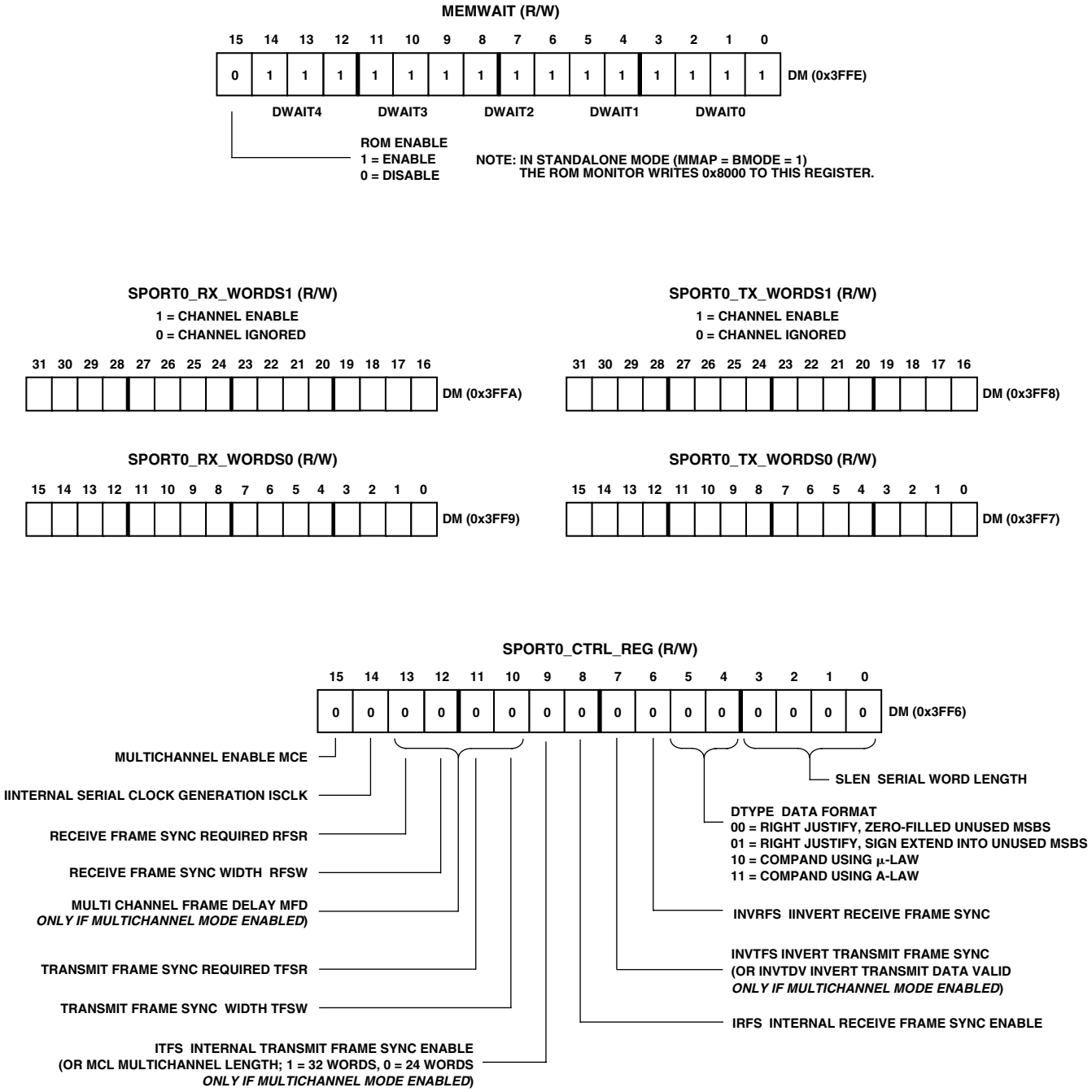

Figure 45. Structure of Registers of ADMC401

Default bit values are shown; if no value is shown, the bit field is undefined at reset. Reserved bits are shown on a gray field—these bits should always be written as shown.

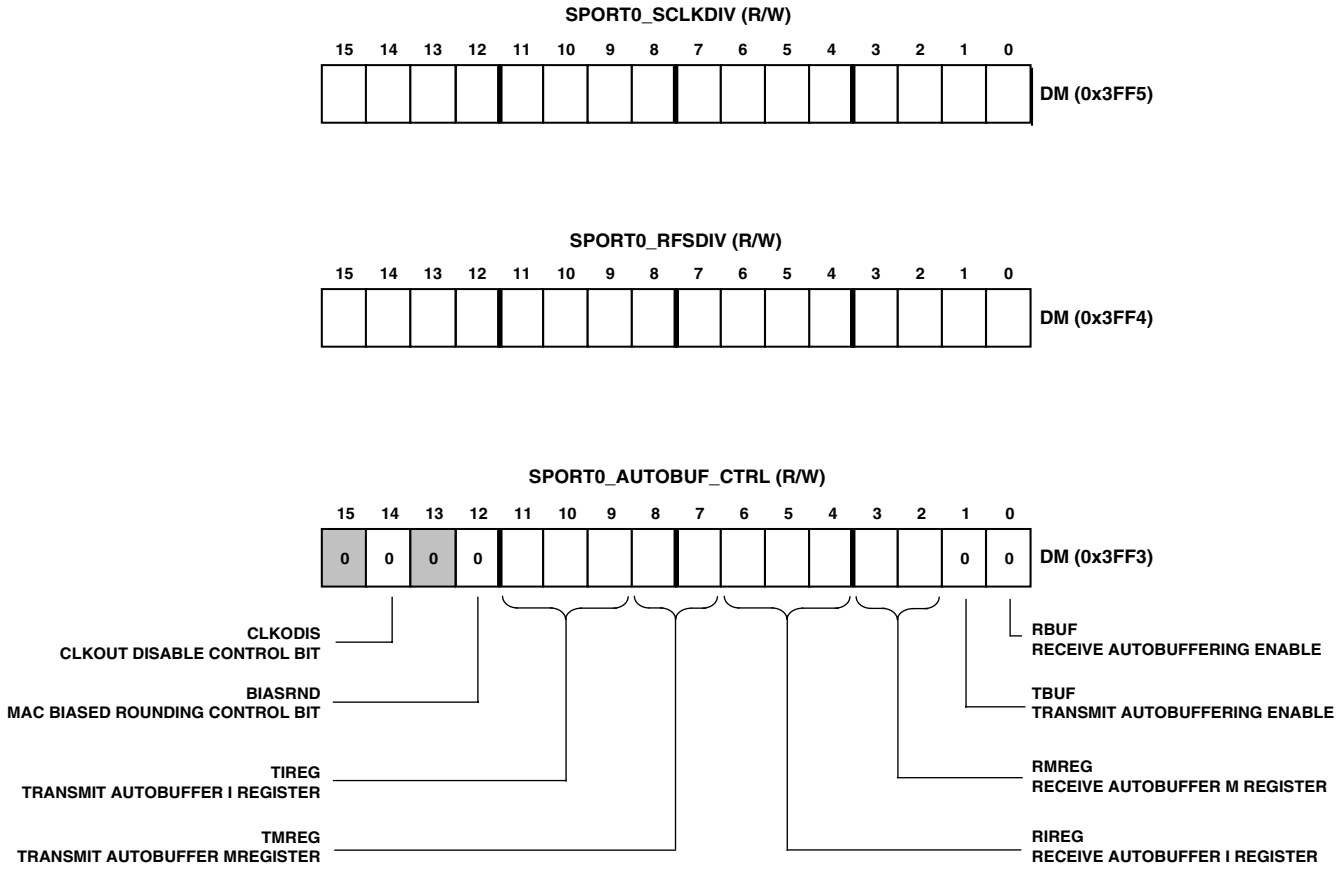

Figure 46. Structure of Registers of ADMC401

Default bit values are shown; if no value is shown, the bit field is undefined at reset. Reserved bits are shown on a gray field—these bits should always be written as shown.

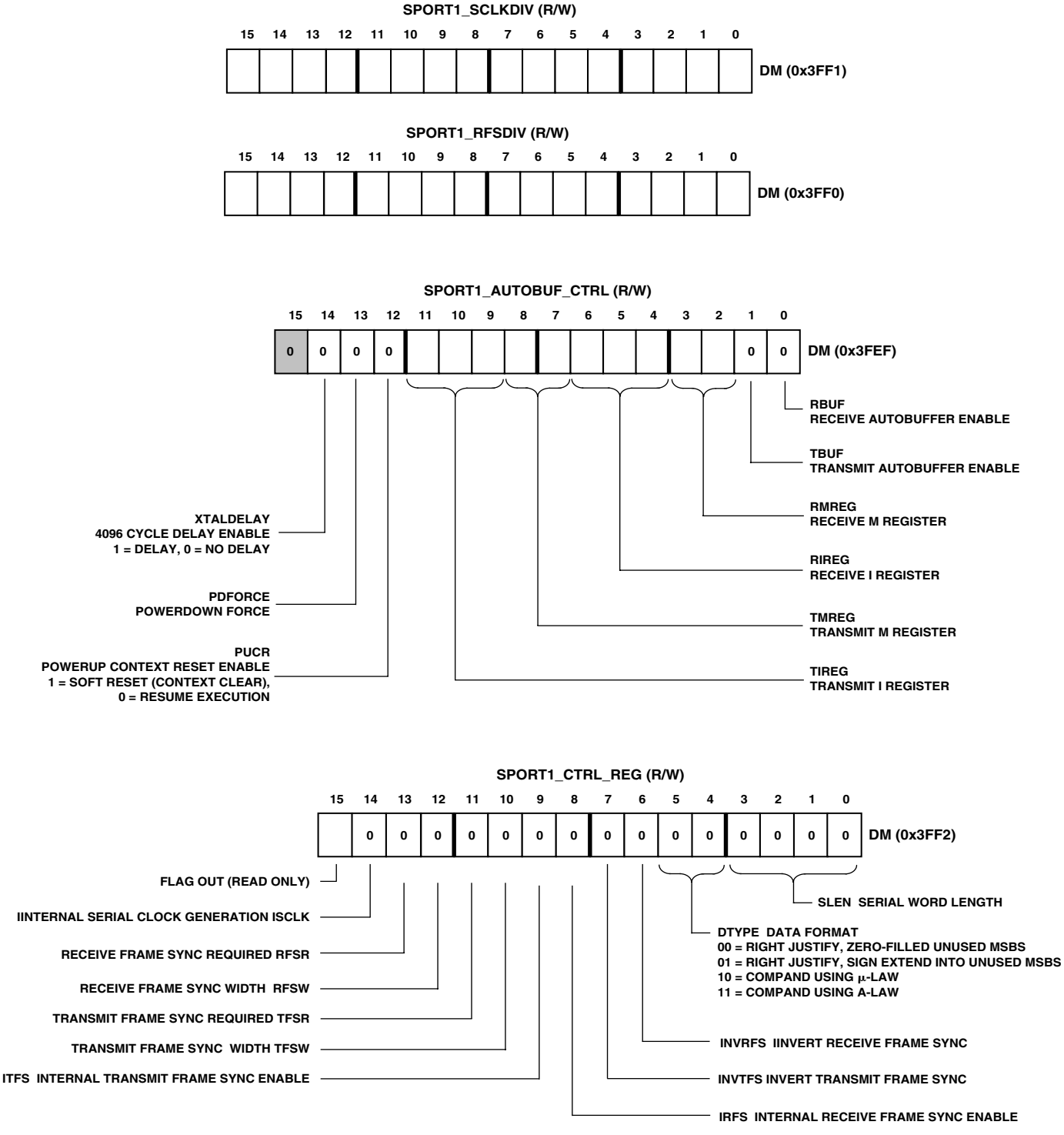

Figure 47. Structure of Registers of ADMC401

Default bit values are shown; if no value is shown, the bit field is undefined at reset. Reserved bits are shown on a gray field—these bits should always be written as shown.

OUTLINE DIMENSIONS

Dimensions shown in inches and (mm).

144-Lead Plastic Thin Quad Flatpack (LQFP)
ST-144

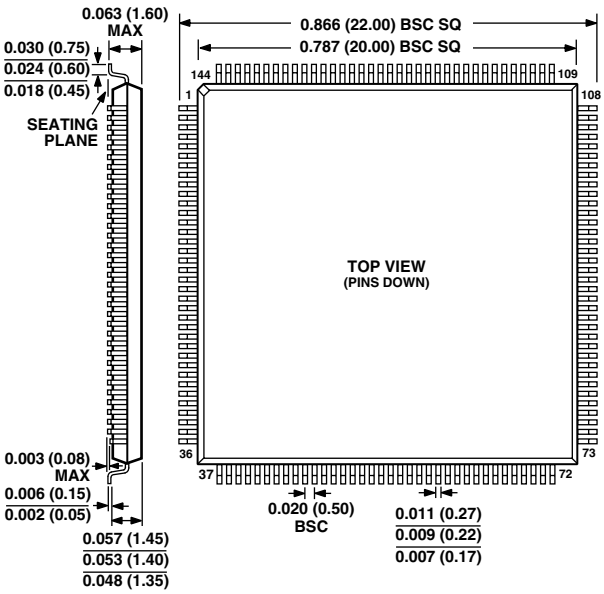

Only dimensions in mm are accurate. The inch equivalents are approximations rounded to three decimal places.
Only the mm values are recommended for use in PCB layout.

C3491b–1.5–6/00 (rev. B) 00108

PRINTED IN U.S.A.

Компания «ЭлектроПласт» предлагает заключение долгосрочных отношений при поставках импортных электронных компонентов на взаимовыгодных условиях!

Наши преимущества:

- Оперативные поставки широкого спектра электронных компонентов отечественного и импортного производства напрямую от производителей и с крупнейших мировых складов;
- Поставка более 17-ти миллионов наименований электронных компонентов;
- Поставка сложных, дефицитных, либо снятых с производства позиций;
- Оперативные сроки поставки под заказ (от 5 рабочих дней);
- Экспресс доставка в любую точку России;
- Техническая поддержка проекта, помощь в подборе аналогов, поставка прототипов;
- Система менеджмента качества сертифицирована по Международному стандарту ISO 9001;
- Лицензия ФСБ на осуществление работ с использованием сведений, составляющих государственную тайну;
- Поставка специализированных компонентов (Xilinx, Altera, Analog Devices, Intersil, Interpoint, Microsemi, Aeroflex, Peregrine, Syfer, Eurofarad, Texas Instrument, Miteq, Cobham, E2V, MA-COM, Hittite, Mini-Circuits,General Dynamics и др.);

Помимо этого, одним из направлений компании «ЭлектроПласт» является направление «Источники питания». Мы предлагаем Вам помощь Конструкторского отдела:

- Подбор оптимального решения, техническое обоснование при выборе компонента;
- Подбор аналогов;
- Консультации по применению компонента;
- Поставка образцов и прототипов;
- Техническая поддержка проекта;
- Защита от снятия компонента с производства.

Как с нами связаться

Телефон: 8 (812) 309 58 32 (многоканальный)
Факс: 8 (812) 320-02-42
Электронная почта: org@eplast1.ru
Адрес: 198099, г. Санкт-Петербург, ул. Калинина, дом 2, корпус 4, литера А.