USB Enclosure Series

Including ELK204-7T-USB-MT, ELK204-7T -USB-PL,
EGLK19264A-7T -USB-MT, and EGLK19264A-7T -USB-PL

Technical Datasheet

Revision 1.1

Revision History

Revision	Date	Description	Author
1.1	March 5, 2014	Correction to Current Draw of Backlights	Martino
1.0	April 27, 2012	Initial Release	Clark

Contents

Introduction 1

Hardware 2

- Drawing 2
- Features 4
  - USB Connector 4
  - LED Indicators 4
  - Keypad Input 4
  - Manual Override 4
  - Commands 4

Quick Connect 5

- USB Connections 5

Troubleshooting 5

- Display 5
- Communication 5

Specifications 6

- Block Diagram 6
- Environmental 7
- Electrical 7
- Optical 7

Ordering 8

- Part Numbering Scheme 8
- Options 8

Contact 8

Introduction

The Enclosure Series is complete display solution designed to decrease development time by integrating simple input, output, and display interfaces into a robust external enclosure. With USB communication speeds of up to 115.2kbps and a convenient rear mounting point, the Enclosure Series provides the perfect interface solution for any project.

The simple command structure permits easy software control of many settings including backlight brightness, screen contrast, and baud rate. User input on is available through a built-in, backlit seven key tactile keypad. Three bi-colour LEDs provide visual outputs on each model, a buzzer on the GLK model provides audio feedback, and the built-in USB cable provides a multi-platform interface.

For the LK model, on board memory provides up to forty custom characters which can be saved within the unit and recalled for start screens, bar graphs or larger numbers. And the GLK provides a whopping 256KB for customizable fonts and bitmaps to enhance the graphical user experience.

The versatile Enclosure Series, with all the features mentioned above, is available in a variety of colour and material options to suit almost any application.

Figure 1: ELK204-7T-1U-MT

Figure 2: ELK204-7T-1U-PL

Hardware

Drawing

Metal Enclosure (-MT)

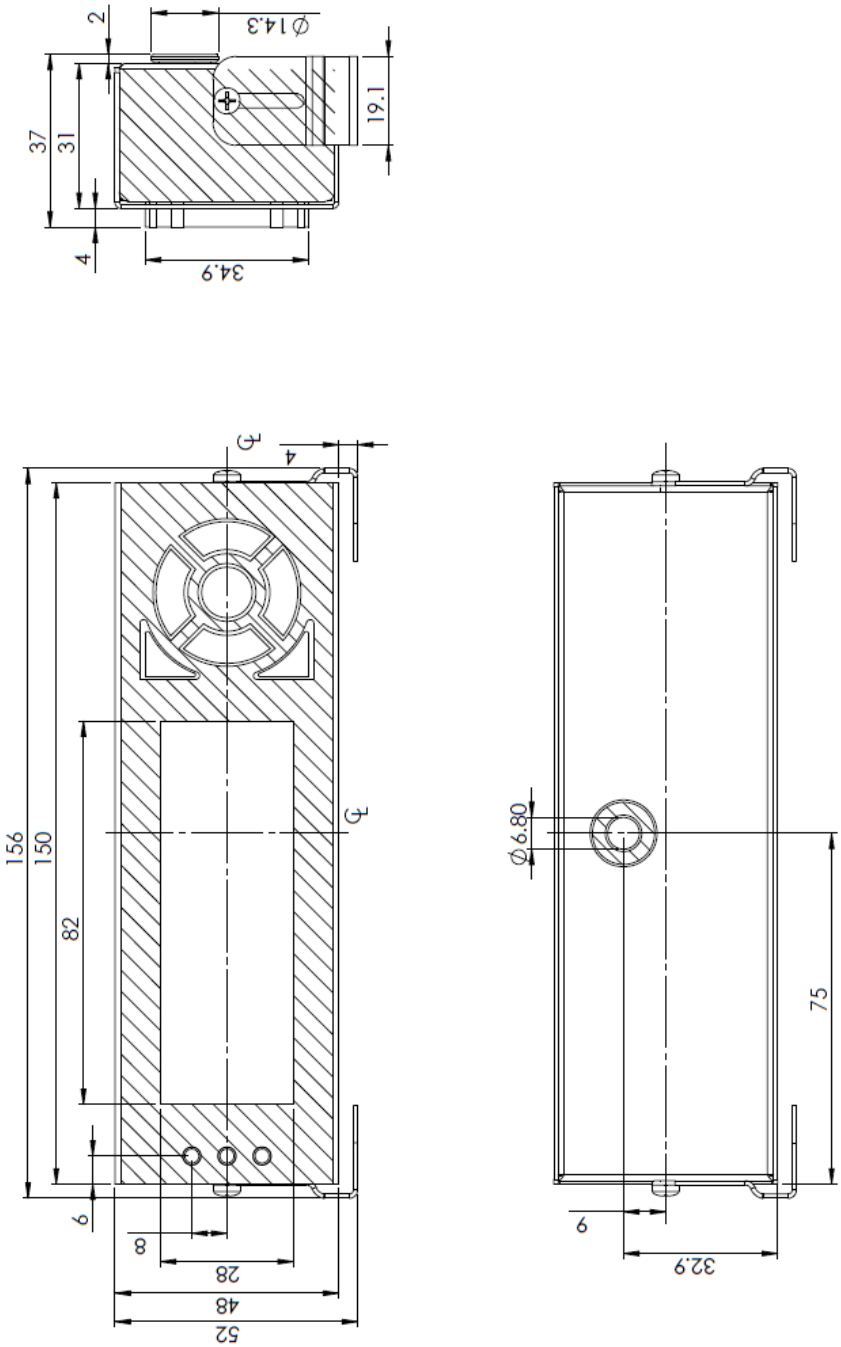

Figure 3: -MT Drawing

Plastic Enclosure (-PL)

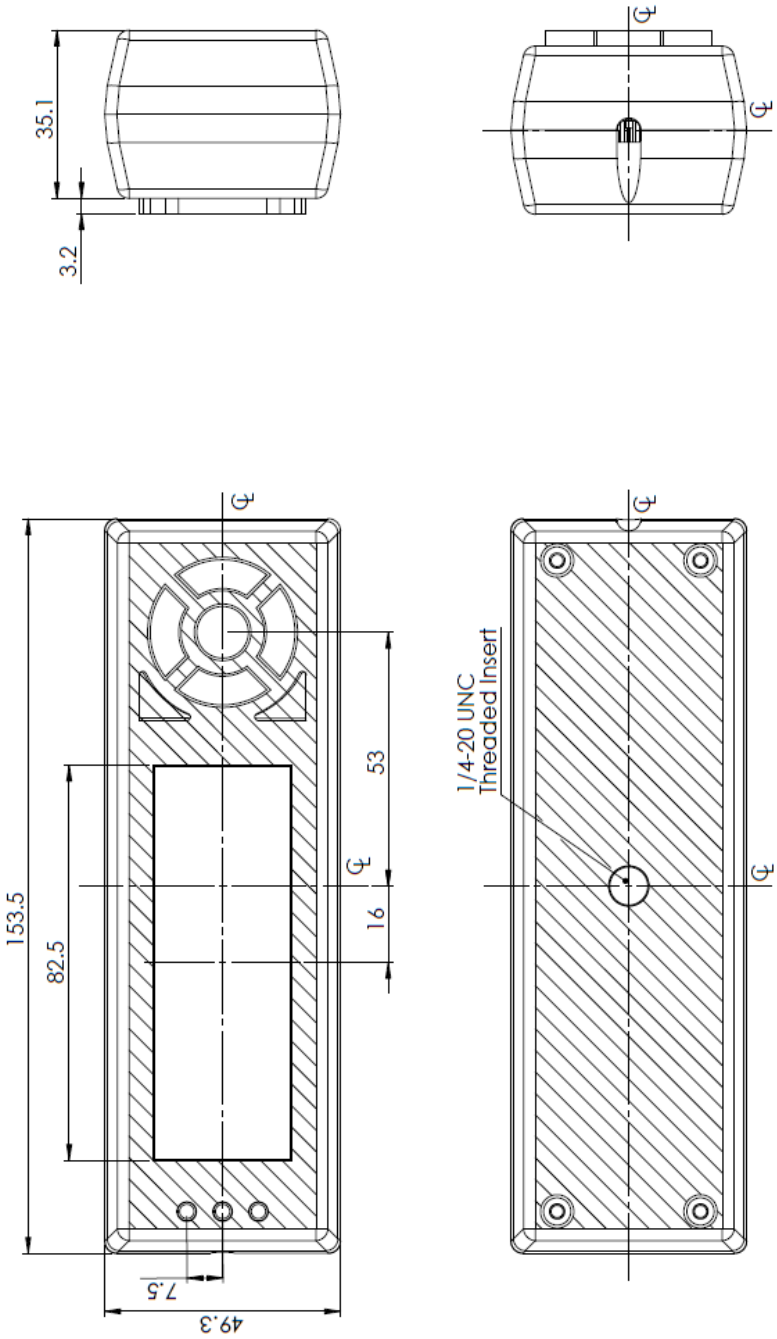

Figure 4: -PL Drawing

Features

USB Connector

The Enclosure Series comes with a familiar USB Connector to fulfill both communication and power needs. The standard A-style connector can be mated to any device with a USB-A header. Most commonly used with a PC, this connection creates a virtual com port that offers a simple power solution with a familiar communication scheme.

Figure 5: USB Connector

Table 1: USB Pinout

Pin	Function
1	Vcc
2	D-
3	D+
5	Gnd

LED Indicators

The Enclosure Series has 6 General Purpose Outputs which control 3 bi-colour LEDs. Red, green, and orange-yellow colours can be created using these software controlled GPOs. Odd numbered GPOs control red while even numbers switch the green aspects of the LEDs, as shown in the table to the right.

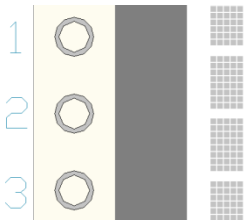

Figure 6: LED Location

Table 2: LED Output

Colour	GPO_O	GPO_E
Yellow	0	0
Green	0	1
Red	1	0
Off	1	1

Keypad Input

The Enclosure Series includes a 7 key, matrix style, embedded keypad and may be configured to allow key presses to be automatically transmitted or polled. The keypad can also be configured for typematic or auto-repeating key presses. The keypad is scanned only when pressed to reduce electrical noise and decrease latency to ensure key input is received quickly and correctly every time.

		Key Down		
		Columns		
		1	2	3
Rows	1	A	B	C
	2	D	E	N/A*
	3	G	H	N/A*

Figure 7: Key Down Values

		Key Up		
		Columns		
		1	2	3
Rows	1	a	b	c
	2	d	e	N/A*
	3	g	h	N/A*

Figure 8: Key Up Values

Manual Override

The Manual Override is provided to allow the Enclosure Series to be temporarily reset to factory defaults.

1. Disconnect power from your display.
2. Hold down the bottom left button.
3. Reconnect power to your unit, and wait for the start screen before releasing the button.
4. Set and save all pertinent settings.

Parameter	Value
Backlight	255
Contrast	128
Baud Rate	19200

Table 3: Manual Override Settings

Commands

An extensive list of commands and additional display information can be found in the LK204-7T-1U and GLK19264A-7T-1U display manuals at www.matrixorbital.ca/manuals.

Quick Connect

USB Connections

The USB connection provides a quick, easy solution for PC development. After driver installation, the Enclosure Series will be accessible through a virtual serial port.

1. Make the connections.
   - Plug the regular, A-style USB header into your computer USB jack.
2. Install the drivers.
   a. Download the latest drivers at www.matrixorbital.ca/drivers, and save them to a known location.
   b. When prompted, install the USB bus controller driver automatically
   c. If asked, continue anyway, even though the driver is not signed
   d. When the driver install is complete, your display will turn on, but communication will not yet be possible.
   e. At the second driver prompt, install the serial port driver automatically
   f. Again, if asked, continue anyway
3. Create.
   - Use uProject or a terminal program to get started, and then move on with your own development. A number of application notes are available at www.matrixorbital.ca/appnotes.

Troubleshooting

Display

If your display is powered successfully, the Matrix Orbital logo, or user created screen should display on start up. If this is not the case, check out these tips.

- Check that your device drivers are installed correctly. In the device manager you should see a USB Serial Port object in the USB controllers section as well as an entry in the Ports section.
- Ensure the contrast is not too high or too low and that the backlight is on. See the Manual Override section to reset these values to default.
- It is possible to overwrite the Matrix Orbital logo start screen, if this happens the screen may be blank. Try writing to the display to ensure it is functional, after checking the contrast above.

Communication

When communication of either text or commands is interrupted, try the steps below.

- Try using a different USB port or utilize a USB hub.
- Ensure that the host system and display module are both communicating on the same baud rate. The default rate for the display module is 19200 bps.
- Unlock the display. See the Set and Save Data Lock command for more info.
- Finally, the display can be reset to defaults using the Manual Override procedure above.

Specifications

Block Diagram

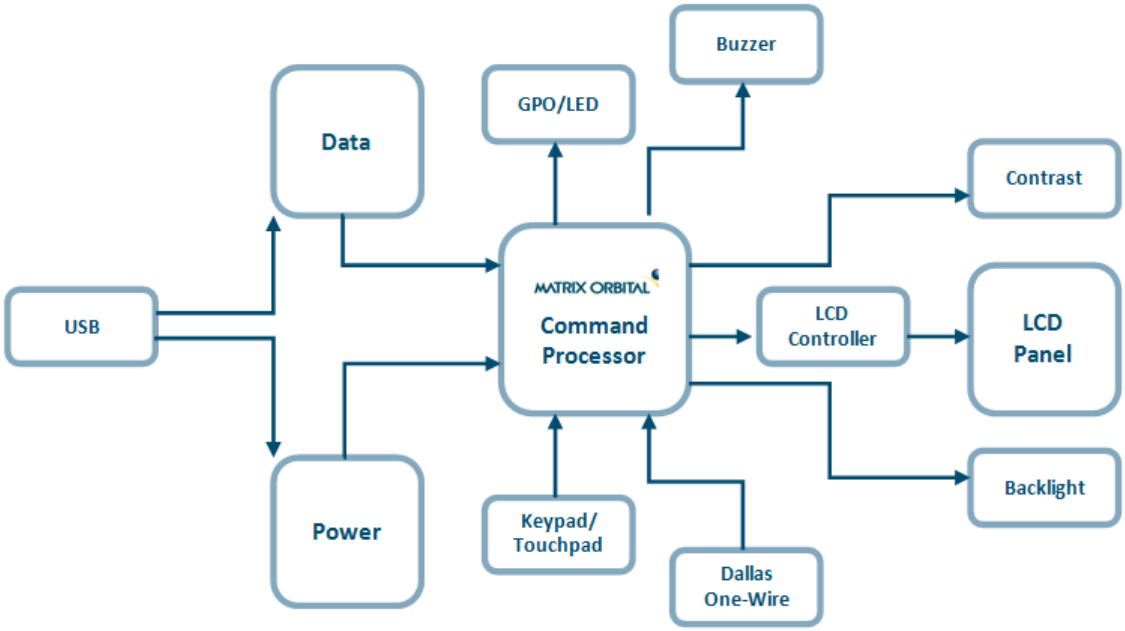

Figure 9: Communication Diagram

Environmental

Table 4: Environmental Specifications

Operating Temperature	0°C to +50°C
Storage Temperature	-10°C to +60°C
Operating Relative Humidity	Maximum 90% non-condensing

Electrical

Table 5: Voltage Specifications

ELK204-7T-1U		
Min	**Typical**	**Max**
4.75V	5.00V	5.25V
EGLK19264A-7T-1U		
Min	**Typical**	**Max**
4.75V	5.00V	5.25V
EGLK19264A-7T-VPT		
Min	**Typical**	**Max**
9.0V	12.0V	35.0V

Table 6: Current Consumption

Daughter Board		Backlight				GPOs
Typical	+	**YG**	**GW & WB**	**TCI**	+	**Max**
60mA		100mA	50mA	200mA		20mA each
Daughter Board		**Backlight**				**GPOs**
Typical	+	**YG**	**FGW & WB**	**TCI**	+	**Max**
165mA		50mA	45mA	65mA		20mA each
Daughter Board	+	**Backlight**				**GPOs**
Typical		**YG**	**FGW & WB**	**TCI**	+	**Max**
165mA		50mA	45mA	65mA		20mA each

Optical

Table 7: Optical Characteristics

Module Size	142.00 x 38.00 x 36.0	mm
Viewing Area (-MT)	82.0 x 28.0	mm
Viewing Area (-PL)	82.5 x 28.9	mm
Character Size (LK)	3.20 x 5.15	mm
Character Pitch (LK)	3.90 x 6.15	mm
Pixel Size (GLK)	0..36 x 0..36	mm
Pixel Pitch (GLK)	0..39 x 0.39	mm
Viewing Direction	12	O'clock
Viewing Angle	-30 to +30	°
Contrast Ratio	3	
Backlight Half-Life (YG)	50,000	Hours
Backlight Half-Life (GW & WB)	20,000	Hours
Backlight Half-Life (TCI)	10,000	Hours

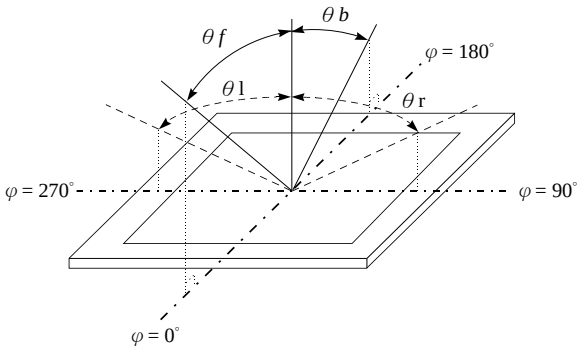

Figure 10: Viewing Angle Definition

Ordering

Part Numbering Scheme

Table 8: Part Numbering Scheme

ELK	-204	-7T	-1U	-TCI		-MT
1	2	3	4	5	6	7

Options

Table 9: Display Options

#	Designator	Options
1	Product Type	ELK: External Liquid Crystal Display with Keypad Input EGLK: External Graphic Liquid Crystal Display with Keypad Input
2	Display Size	-204: 20 Character Columns by 4 Rows -19264A: 192 Pixel Columns by 64 Rows
3	Keypad Size	-7T: Seven Integrated Tactile Keys
4	Form Factor	-1U: Fits a 1U Opening
5	Colour	-YG: Grey Text with Yellow-Green Background -GW: Grey Text with White Background -WB: White Text with Blue Background -TCI: Tricolour Text with Black Background
6	Voltage	*NP: Standard Voltage **-VPT: Wide Voltage with Efficient Switching Power Supply
7	Enclosure Type	-MT: Metal Enclosure -PL: Plastic Enclosure

***Note:** NP means No Populate; skip this designator in the part number and move to the next option.

****Note:** The –VPT voltage option is only available for the -19264A display size.

Contact

Sales
Phone: 403.229.2737
Email: sales@matrixorbital.ca

Support
Phone: 403.204.3750
Email: support@matrixorbital.ca

Online
Purchasing: www.matrixorbital.com
Support: www.matrixorbital.ca

Компания «ЭлектроПласт» предлагает заключение долгосрочных отношений при поставках импортных электронных компонентов на взаимовыгодных условиях!

Наши преимущества:

- Оперативные поставки широкого спектра электронных компонентов отечественного и импортного производства напрямую от производителей и с крупнейших мировых складов;
- Поставка более 17-ти миллионов наименований электронных компонентов;
- Поставка сложных, дефицитных, либо снятых с производства позиций;
- Оперативные сроки поставки под заказ (от 5 рабочих дней);
- Экспресс доставка в любую точку России;
- Техническая поддержка проекта, помощь в подборе аналогов, поставка прототипов;
- Система менеджмента качества сертифицирована по Международному стандарту ISO 9001;
- Лицензия ФСБ на осуществление работ с использованием сведений, составляющих государственную тайну;
- Поставка специализированных компонентов (Xilinx, Altera, Analog Devices, Intersil, Interpoint, Microsemi, Aeroflex, Peregrine, Syfer, Eurofarad, Texas Instrument, Miteq, Cobham, E2V, MA-COM, Hittite, Mini-Circuits,General Dynamics и др.);

Помимо этого, одним из направлений компании «ЭлектроПласт» является направление «Источники питания». Мы предлагаем Вам помощь Конструкторского отдела:

- Подбор оптимального решения, техническое обоснование при выборе компонента;
- Подбор аналогов;
- Консультации по применению компонента;
- Поставка образцов и прототипов;
- Техническая поддержка проекта;
- Защита от снятия компонента с производства.

Как с нами связаться

Телефон: 8 (812) 309 58 32 (многоканальный)
Факс: 8 (812) 320-02-42
Электронная почта: org@eplast1.ru
Адрес: 198099, г. Санкт-Петербург, ул. Калинина, дом 2, корпус 4, литера А.