# TNY174-180
# TinySwitch-LT Family

## Energy Efficient, Offline Switcher with Enhanced Flexibility and Extended Power Range

## Product Highlights

### Lowest System Cost with Enhanced Flexibility

- 650 V rating optimized for non-active PFC applications
- Simple ON/OFF control, no loop compensation needed
- Selectable current limit through BP/M capacitor value
  - Higher current limit extends peak power or, in open frame applications, maximum continuous power
  - Lower current limit improves efficiency in enclosed adapters/ chargers
  - Allows optimum TinySwitch-LT choice by swapping devices with no other circuit redesign
- Tight $I^2f$ parameter tolerance reduces system cost
  - Maximizes MOSFET and magnetics power delivery
  - Minimizes max overload power, reducing cost of transformer, primary clamp & secondary components
- ON-time extension – extends low-line regulation range/hold-up time to reduce input bulk capacitance
- Self-biased: no bias winding or bias components
- Frequency jittering reduces EMI filter costs
- Pin-out simplifies heat sinking to the PCB
- SOURCE pins are electrically quiet for low EMI

### Enhanced Safety and Reliability Features

- Accurate hysteretic thermal shutdown protection with automatic recovery eliminates need for manual reset
- Auto-restart delivers <3% of maximum power in short-circuit and open loop fault conditions
- Output overvoltage shutdown with optional Zener
- Very low component count enhances reliability and enables single-sided printed circuit board layout
- High bandwidth provides fast turn on with no overshoot and excellent transient load response
- Extended creepage between DRAIN and all other pins improves field reliability

### EcoSmart™– Extremely Energy Efficient

- Easily meets all global energy efficiency regulations
- No-load <150 mW at 265 VAC without bias winding, <50 mW with bias winding
- ON/OFF control provides constant efficiency down to very light loads – ideal for mandatory CEC regulations

### Applications

- Chargers/adapters for cell/cordless phones, PDAs, digital cameras, MP3/portable audio, shavers, etc.
- DVD/PVR and other low power set top decoders
- Supplies for appliances, industrial systems, metering, etc.

## Description

TinySwitch™-LT incorporates a 650 V power MOSFET, oscillator, high-voltage switched current source, current limit (user selectable) and thermal shutdown circuitry. The IC family uses an ON/OFF control scheme and offers a design flexible solution with a low system cost and extended power capability.

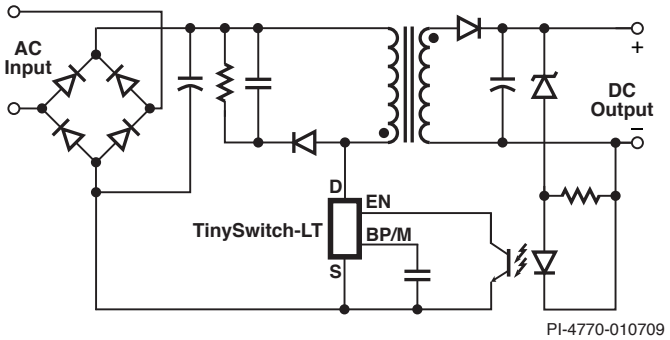


*Figure 1. Typical Application.*

### Output Power Table

| Product[3] | 230 VAC ± 15% | | 85-265 VAC | |
|---|---|---|---|---|
| | Adapter[1] | Peak or Open Frame[2] | Adapter[1] | Peak or Open Frame[2] |
| **TNY174P/D[4]** | 6 W | 11 W | 5 W | 8.5 W |
| **TNY175P/D[4]** | 8.5 W | 15 W | 6 W | 11.5 W |
| **TNY176P/D[4]** | 10 W | 19 W | 7 W | 15 W |
| **TNY177P[4]** | 13 W | 23.5 W | 8 W | 18 W |
| **TNY177D** | 11.5 W | 23.5 W | 7 W | 18 W |
| **TNY178P** | 16 W | 28 W | 10 W | 21.5 W |
| **TNY178D** | 14.5 W | 26 W | 9 W | 19.5 W |
| **TNY179P** | 18 W | 32 W | 12 W | 25 W |
| **TNY180P** | 20 W | 36.5 W | 14 W | 28.5 W |

*Table 1. Output Power Table.*

Notes:
1. Minimum continuous power in a typical non-ventilated enclosed adapter measured at +50 °C ambient. Use of an external heat sink will increase power capability.
2. Minimum peak power capability in any design or minimum continuous power in an open frame design (see Key Applications Considerations).
3. Packages: P: DIP-8C, D: SO-8C. See Part Ordering Information.
4. See Key Application Considerations.

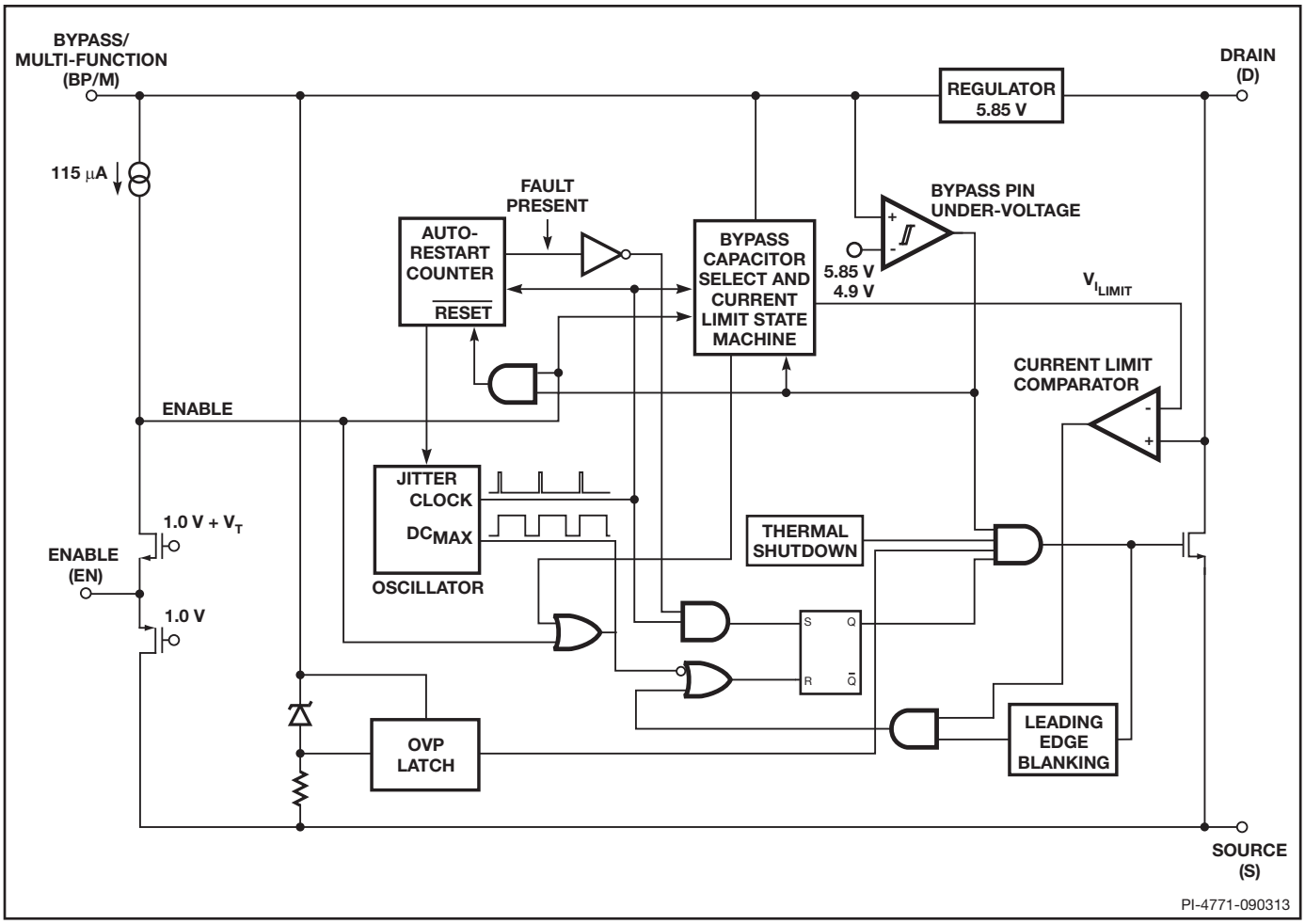


*Figure 2. Functional Block Diagram.*

## Pin Functional Description

**DRAIN (D) Pin:**
This pin is the power MOSFET drain connection. It provides internal operating current for both start-up and steady-state operation.

**BYPASS/MULTI-FUNCTION (BP/M) Pin:**
This pin has multiple functions:

1. It is the connection point for an external bypass capacitor for the internally generated 5.85 V supply.
2. It is a mode selector for the current limit value, depending on the value of the capacitance added. Use of a 0.1 µF capacitor results in the standard current limit value. Use of a 1 µF capacitor results in the current limit being reduced to that of the next smaller device size. Use of a 10 µF capacitor results in the current limit being increased to that of the next larger device size for TNY175-180.
3. It provides a shutdown function. When the current into the bypass pin exceeds $I_{SD}$, the device latches off until the BP/M voltage drops below 4.9 V, during a power-down. This can be used to provide an output overvoltage function with a Zener connected from the BP/M pin to a bias winding supply.

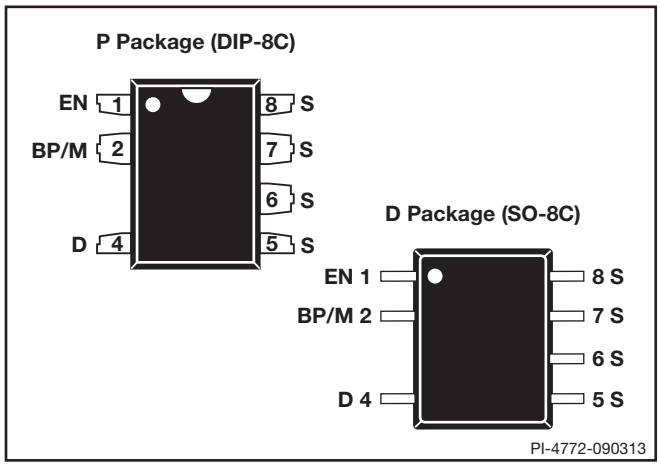


*Figure 3. Pin Configuration.*

**ENABLE (EN) Pin:**
The switching of the power MOSFET is controlled by this pin. MOSFET switching is terminated when a current greater than a threshold current is drawn from this pin. Switching resumes when the current being pulled from the pin drops to less than a threshold current. A modulation of the threshold current reduces group pulsing. The threshold current is between 75 μA and 115 μA.

### SOURCE (S) Pin:
This pin is internally connected to the output MOSFET source for high-voltage power return and control circuit common.

## TinySwitch-LT Functional Description

TinySwitch-LT combines a high-voltage power MOSFET switch with a power supply controller in one device. Unlike conventional PWM (pulse width modulator) controllers, it uses a simple ON/OFF control to regulate the output voltage.

The controller consists of an oscillator, enable circuit (sense and logic), current limit state machine, 5.85 V regulator, BYPASS/MULTI-FUNCTION pin , overvoltage circuit, and current limit selection circuitry, over-temperature protection, current limit circuit, leading edge blanking, and a 650 V power MOSFET. TinySwitch-LT incorporates additional circuitry for auto-restart, adaptive switching cycle on-time extension, and frequency jitter. Figure 2 shows the functional block diagram with the most important features.

**Oscillator**
The typical oscillator frequency is internally set to an average of 132 kHz. Two signals are generated from the oscillator: the maximum duty cycle signal ($DC_{MAX}$) and the clock signal that indicates the beginning of each cycle.

The oscillator incorporates circuitry that introduces a small amount of frequency jitter, typically 8 kHz peak-to-peak, to minimize EMI emission. The modulation rate of the frequency jitter is set to 1 kHz to optimize EMI reduction for both average and quasi-peak emissions. The frequency jitter should be measured with the oscilloscope triggered at the falling edge of the DRAIN waveform. The waveform in Figure 4 illustrates the frequency jitter.

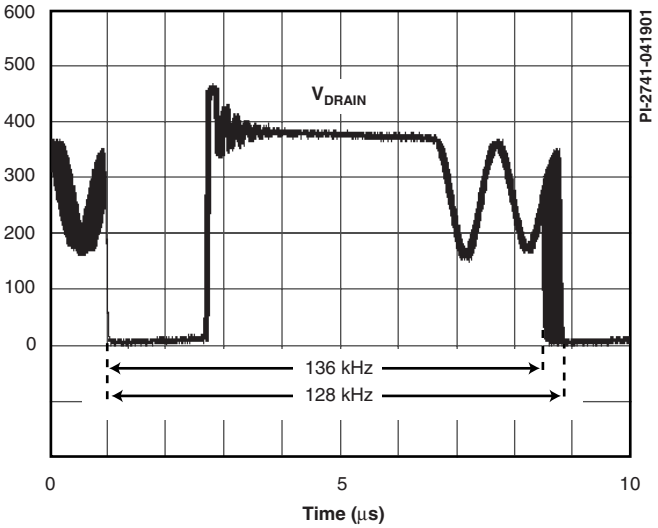


*Figure 4. Frequency Jitter.*

**Enable Input and Current Limit State Machine**
The enable input circuit at the ENABLE pin consists of a low impedance source follower output set at 1.2 V. The current through the source follower is limited to 115 μA. When the current out of this pin exceeds the threshold current, a low logic level (disable) is generated at the output of the enable circuit, until the current out of this pin is reduced to less than the threshold current. This enable circuit output is sampled at the beginning of each cycle on the rising edge of the clock signal. If high, the power MOSFET is turned on for that cycle (enabled). If low, the power MOSFET remains off (disabled). Since the sampling is done only at the beginning of each cycle, subsequent changes in the ENABLE pin voltage or current during the remainder of the cycle are ignored.

The current limit state machine reduces the current limit by discrete amounts at light loads when TinySwitch-LT is likely to switch in the audible frequency range. The lower current limit raises the effective switching frequency above the audio range and reduces the transformer flux density, including the associated audible noise. The state machine monitors the sequence of enable events to determine the load condition and adjusts the current limit level accordingly in discrete amounts.

Under most operating conditions (except when close to no-load), the low impedance of the source follower keeps the voltage on the ENABLE pin from going much below 1.2 V in the disabled state. This improves the response time of the optocoupler that is usually connected to this pin.

**5.85 V Regulator and 6.4 V Shunt Voltage Clamp**
The 5.85 V regulator charges the bypass capacitor connected to the BYPASS pin to 5.85 V by drawing a current from the voltage on the DRAIN pin whenever the MOSFET is off. The BYPASS/MULTI-FUNCTION pin is the internal supply voltage node. When the MOSFET is on, the device operates from the energy stored in the bypass capacitor. Extremely low power consumption of the internal circuitry allows TinySwitch-LT to operate continuously from current it takes from the DRAIN pin. A bypass capacitor value of 0.1 μF is sufficient for both high frequency decoupling and energy storage.

In addition, there is a 6.4 V shunt regulator clamping the BYPASS/MULTI-FUNCTION pin at 6.4 V when current is provided to the BYPASS/MULTI-FUNCTION pin through an external resistor. This facilitates powering of TinySwitch-LT externally through a bias winding to decrease the no-load consumption to well below 50 mW.

**BYPASS/MULTI-FUNCTION Pin**
The BYPASS/MULTI-FUNCTION pin circuitry disables the power MOSFET when the BYPASS/MULTI-FUNCTION pin voltage drops below 4.9 V in steady state operation. Once the BYPASS/MULTI-FUNCTION pin voltage drops below 4.9 V in steady state operation, it must rise back to 5.85 V to enable (turn-on) the power MOSFET.

**Over-Temperature Protection**
The thermal shutdown circuitry senses the die temperature. The threshold is typically set at 142 °C with 75 °C hysteresis. When the die temperature rises above this threshold the power MOSFET is disabled and remains disabled until the die temperature falls by 75 °C, at which point it is re-enabled. A large hysteresis of 75 °C (typical) is provided to prevent over-heating of the PC board due to a continuous fault condition.

**Current Limit**
The current limit circuit senses the current in the power MOSFET. When this current exceeds the internal threshold ($I_{LIMIT}$), the power MOSFET is turned off for the remainder of that cycle. The current limit state machine reduces the current limit threshold by discrete amounts under medium and light loads.

The leading edge blanking circuit inhibits the current limit comparator for a short time ($t_{LEB}$) after the power MOSFET is turned on. This leading edge blanking time has been set so that current spikes caused by capacitance and secondary-side rectifier reverse recovery time will not cause premature termination of the switching pulse.

**Auto-Restart**
In the event of a fault condition such as output overload, output short-circuit, or an open loop condition, TinySwitch-LT enters into auto-restart operation. An internal counter clocked by the oscillator is reset every time the ENABLE pin is pulled low. If the ENABLE pin is not pulled low for 64 ms, the power MOSFET switching is normally disabled for 2.5 seconds. The auto-restart alternately enables and disables the switching of the power MOSFET until the fault condition is removed. Figure 5 illustrates auto-restart circuit operation in the presence of an output short-circuit.

**Adaptive Switching Cycle On-Time Extension**
Adaptive switching cycle on-time extension keeps the cycle on until current limit is reached, instead of prematurely terminating after the $DC_{MAX}$ signal goes low. This feature reduces the minimum input voltage required to maintain regulation, extending hold-up time and minimizing the size of bulk capacitor required. The on-time extension is disabled during the start-up of the power supply, until the power supply output reaches regulation.

## TinySwitch-LT Operation

TinySwitch-LT devices operate in the current limit mode. When enabled, the oscillator turns the power MOSFET on at the beginning of each cycle. The MOSFET is turned off when the current ramps up to the current limit or when the $DC_{MAX}$ limit is reached. Since the highest current limit level and frequency of a TinySwitch-LT design are constant, the power delivered to the load is proportional to the primary inductance of the transformer and peak primary current squared. Hence, designing the supply involves calculating the primary inductance of the transformer for the maximum output power required. If the TinySwitch-LT is appropriately chosen for the power level, the current in the calculated inductance will ramp up to current limit before the $DC_{MAX}$ limit is reached.

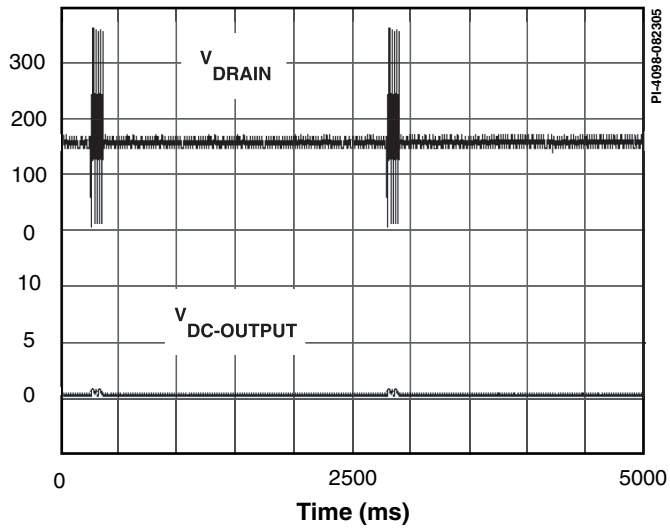


*Figure 5. Auto-Restart Operation.*

**Enable Function**
TinySwitch-LT senses the ENABLE pin to determine whether or not to proceed with the next switching cycle. The sequence of cycles is used to determine the current limit. Once a cycle is started, it always completes the cycle (even when the ENABLE pin changes state half way through the cycle). This operation results in a power supply in which the output voltage ripple is determined by the output capacitor, amount of energy per switch cycle and the delay of the feedback.

The ENABLE pin signal is generated on the secondary by comparing the power supply output voltage with a reference voltage. The ENABLE pin signal is high when the power supply output voltage is less than the reference voltage.

In a typical implementation, the ENABLE pin is driven by an optocoupler. The collector of the optocoupler transistor is connected to the ENABLE pin and the emitter is connected to the SOURCE pin. The optocoupler LED is connected in series with a Zener diode across the DC output voltage to be regulated. When the output voltage exceeds the target regulation voltage level (optocoupler LED voltage drop plus Zener voltage), the optocoupler LED will start to conduct, pulling the ENABLE pin low. The Zener diode can be replaced by a TL431 reference circuit for improved accuracy.

**ON/OFF Operation with Current Limit State Machine**
The internal clock of the TinySwitch-LT runs all the time. At the beginning of each clock cycle, it samples the ENABLE pin to decide whether or not to implement a switch cycle, and based on the sequence of samples over multiple cycles, it determines the appropriate current limit. At high loads, the state machine sets the current limit to its highest value. At lighter loads, the state machine sets the current limit to reduced values.

At near maximum load, TinySwitch-LT will conduct during nearly all of its clock cycles (Figure 6). At slightly lower load, it will "skip" additional cycles in order to maintain voltage regulation at the power supply output (Figure 7). At medium loads, cycles will be skipped and the current limit will be reduced (Figure 8). At very light loads, the current limit will be reduced even further (Figure 9). Only a small percentage of cycles will occur to satisfy the power consumption of the power supply.

The response time of the ON/OFF control scheme is very fast compared to PWM control. This provides tight regulation and excellent transient response.

**Power-Up/Down**
The TinySwitch-LT requires only a 0.1 μF capacitor on the BYPASS/MULTI-FUNCTION pin to operate with standard current limit. Because of its small size, the time to charge this capacitor is kept to an absolute minimum, typically 0.6 ms. The time to charge will vary in proportion to the BYPASS/MULTI-FUNCTION pin capacitor value when selecting different current limits. Due to the high bandwidth of the ON/OFF feedback, there is no overshoot at the power supply output.

Figure 10 shows typical power-up timing waveforms.

Under start-up and overload conditions, when the conduction time is less than 400 ns, the device reduces the switching frequency to maintain control of the peak drain current.

During power-down, the power MOSFET will switch for 64 ms after the output loses regulation.

Figure 11 illustrates a typical power-down timing waveform.

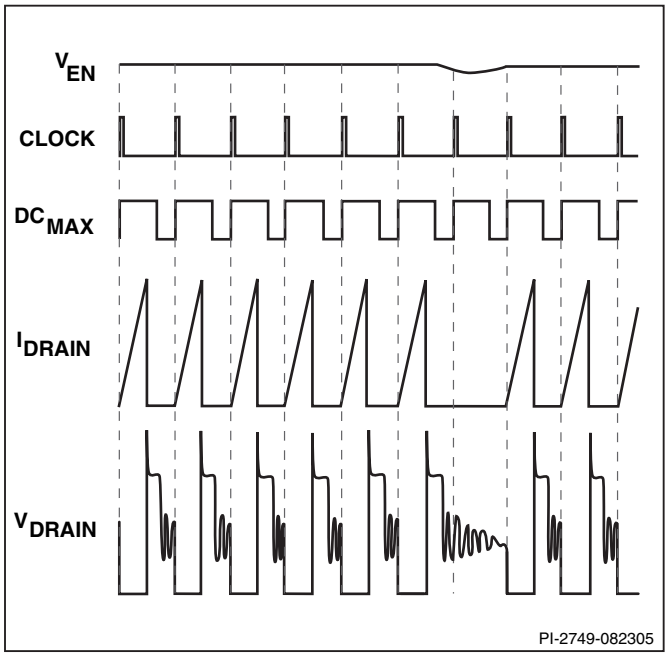


*Figure 6. Operation at Near Maximum Loading.*

No bias winding is needed to provide power to the chip because it draws the power directly from the DRAIN pin (see Functional Description above). This has two main benefits. First, for a nominal application, this eliminates the cost of a bias winding and associated components. Secondly, for battery charger applications, the current-voltage characteristic often allows the output voltage to fall close to zero volts while still delivering power. TinySwitch-LT accomplishes this without a forward bias winding and its many associated components. For applications that require very low no-load power consumption (50 mW), a resistor from a bias winding to the BYPASS/MULTI-FUNCTION pin can provide the power to the chip. The minimum recommended current supplied is 1 mA. The BYPASS/MULTI-FUNCTION pin in this case will be clamped at 6.4 V. This method will eliminate the power draw from the DRAIN pin, thereby reducing the no-load power consumption and improving full-load efficiency.

**Current Limit Operation**

Each switching cycle is terminated when the DRAIN current reaches the current limit of the device. Current limit operation provides good line ripple rejection and relatively constant power delivery independent of input voltage.

**BYPASS/MULTI-FUNCTION Pin Capacitor**

The BYPASS/MULTI-FUNCTION pin can use a ceramic capacitor as small as 0.1 μF for decoupling the internal power supply of the device. A larger capacitor size can be used to adjust the current limit. For TNY175-180, a 1 μF BP/M pin capacitor will select a lower current limit equal to the standard current limit of the next smaller device and a 10 μF BP/M pin capacitor will select a higher current limit equal to the standard current limit of the next larger device. The higher current limit level of the TNY180 is set to 850 mA typical. The TNY174 MOSFET does not have the capability for increased current limit so this feature is not available in this device.

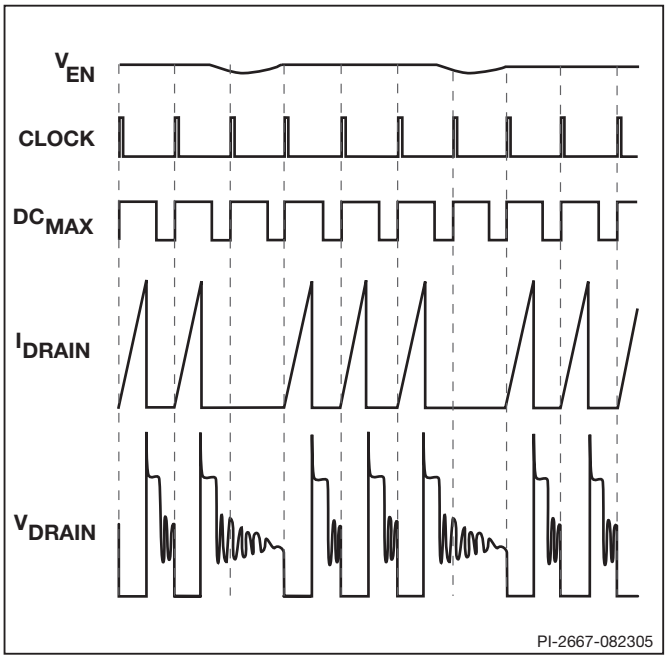


*Figure 7. Operation at Moderately Heavy Loading.*

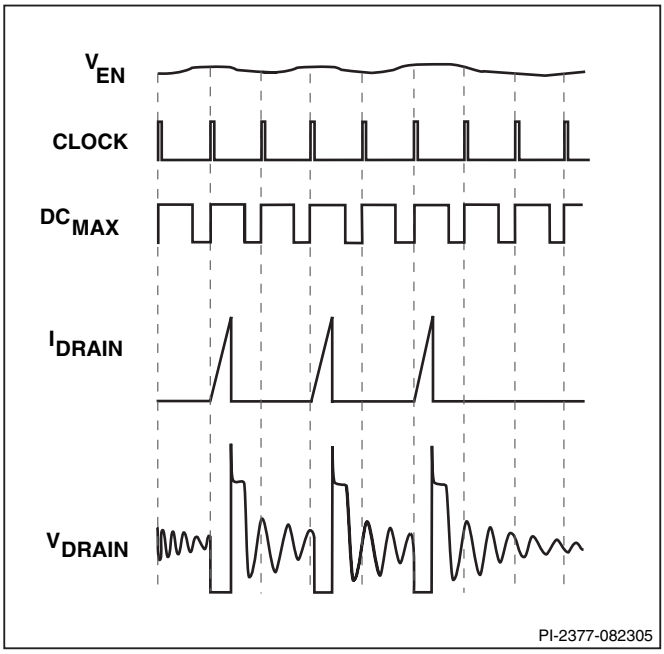


*Figure 8. Operation at Medium Loading.*

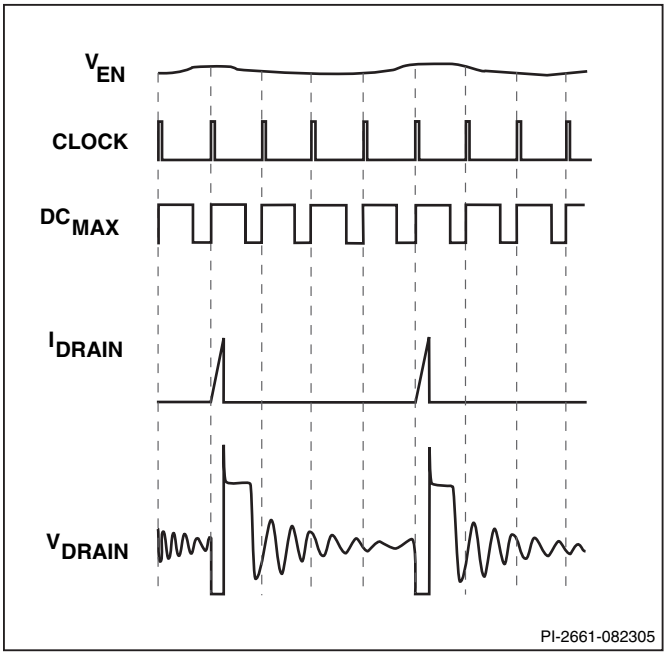


*Figure 9. Operation at Very Light Load.*

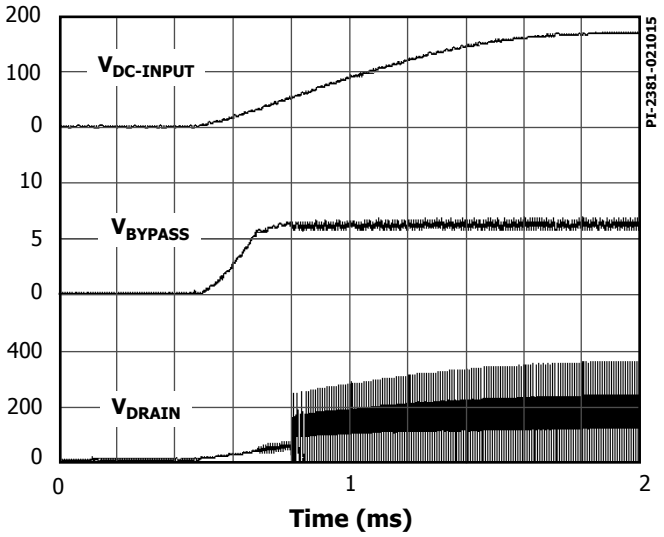


*Figure 10. Power-Up.*

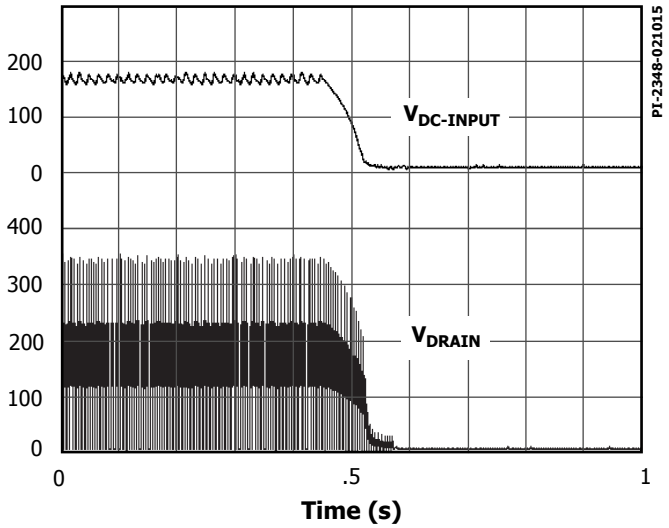


*Figure 11. Normal Power-Down Timing.*

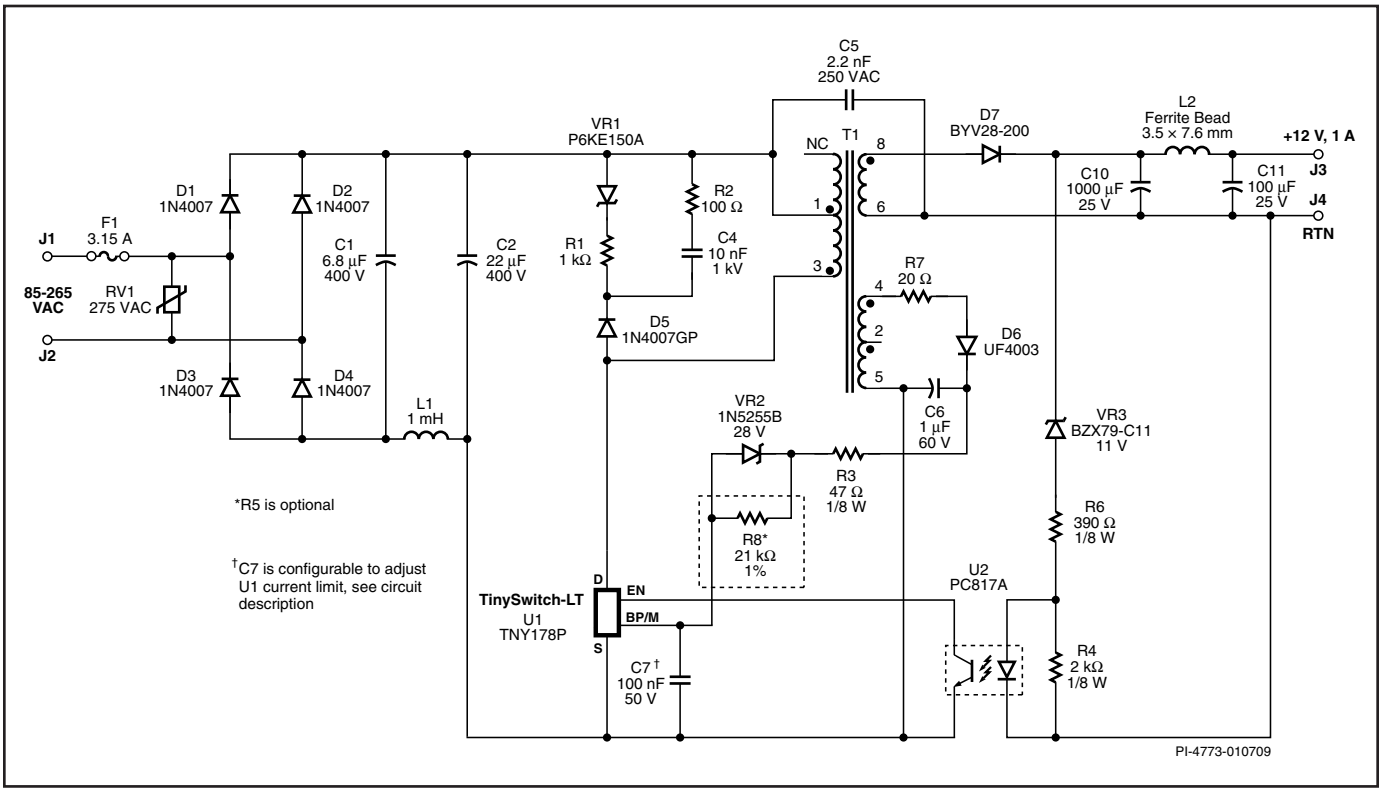


*Figure 12. TNY178P, 12 V, 1 A Universal Input Power Supply.*

## Applications Example

The circuit shown in Figure 12 is a low cost, high efficiency, flyback power supply designed for 12 V, 1 A output from universal input using the TNY178.

The supply features primary sensed output overvoltage latching shutdown protection, high efficiency (>80%), and very low no-load consumption (<50 mW at 265 VAC). Output regulation is accomplished using a simple Zener reference and optocoupler feedback.

The rectified and filtered input voltage is applied to the primary winding of T1. The other side of the transformer primary is driven by the integrated MOSFET in U1. Diode D5, C2, R1, R2, and VR1 comprise the clamp circuit, limiting the leakage inductance turn-off voltage spike on the DRAIN pin to a safe value. The use of a combination a Zener clamp and parallel RC optimizes both EMI and energy efficiency. Resistor R2 allows the use of a slow recovery, low cost, rectifier diode by limiting the reverse current through D5. The selection of a slow diode also improves efficiency and conducted EMI but should be a glass passivated type, with a specified recovery time of ≤ 2 µs.

The output voltage is regulated by the Zener diode VR3. When the output voltage exceeds the sum of the Zener and optocoupler LED forward drop, current will flow in the optocoupler LED. This will cause the transistor of the optocoupler to sink current. When this current exceeds the ENABLE pin threshold current the next switching cycle is inhibited. When the output voltage falls below the feedback threshold, a conduction cycle is allowed to occur and, by adjusting the number of enabled cycles, output regulation is maintained. As the load reduces, the number of enabled cycles decreases, lowering the effective switching frequency and scaling switching losses with load. This provides almost constant efficiency down to very light loads, ideal for meeting energy efficiency requirements.

As the TinySwitch-LT devices are completely self-powered, there is no requirement for an auxiliary or bias winding on the transformer. However by adding a bias winding, the output overvoltage protection feature can be configured, protecting the load against open feedback loop faults.

When an overvoltage condition occurs, such that bias voltage exceeds the sum of VR2 and the BYPASS/MULTIFUNCTION (BP/M) pin voltage (28 V+5.85 V), current begins to flow into the BP/M pin. When this current exceeds $I_{SD}$ the internal latching shutdown circuit in TinySwitch-LT is activated. This condition is reset when the BP/M pin voltage drops below 2.6 V after removal of the AC input. In the example shown, on opening the loop, the OVP trips at an output of 17 V.

For lower no-load input power consumption, the bias winding may also be used to supply the TinySwitch-LT device. Resistor R8 feeds current into the BP/M pin, inhibiting the internal high-voltage current source that normally maintains the BP/M pin capacitor voltage (C7) during the internal MOSFET off time. This reduces the no-load consumption of this design from 140 mW to 40 mW at 265 VAC.

In addition to the simple input pi filter (C1, L1, C2) for differential mode EMI, this design makes use of E-Shield™ shielding techniques in the transformer to reduce common mode EMI displacement currents, and R2 and C4 as a damping network to reduce high frequency transformer ringing. These techniques, combined with the frequency jitter of TNY178, give excellent conducted and radiated EMI performance with this design achieving >12 dBμV of margin to EN55022 Class B conducted EMI limits.

For design flexibility the value of C7 can be selected to pick one of the 3 current limits options in U1. This allows the designer to select the current limit appropriate for the application:

- Standard current limit ($I_{LIMIT}$) is selected with a 0.1 μF BP/M pin capacitor and is the normal choice for typical enclosed adapter applications.
- When a 1 μF BP/M pin capacitor is used, the current limit is reduced ($I_{LIMITred}$ or $I_{LIMIT}$-1) offering reduced RMS device currents and therefore improved efficiency, but at the expense of maximum power capability. This is ideal for thermally challenging designs where dissipation must be minimized.
- When a 10 μF BP/M pin capacitor is used, the current limit is increased ($I_{LIMITinc}$ or $I_{LIMIT}$+1), extending the power capability for applications requiring higher peak power or continuous power where the thermal conditions allow.

Further flexibility comes from the current limits between adjacent TinySwitch-LT family members being compatible. The reduced current limit of a given device is equal to the standard current limit of the next smaller device and the increased current limit is equal to the standard current limit of the next larger device.

## Key Application Considerations

### TinySwitch-LT Design Considerations

**Output Power Table**

The data sheet output power table (Table 1) represents the minimum practical continuous output power level that can be obtained under the following assumed conditions:

1. The minimum DC input voltage is 100 V or higher for 85 VAC input, or 220 V or higher for 230 VAC input or 115 VAC with a voltage doubler. The value of the input capacitance should be sized to meet these criteria for AC input designs.
2. Efficiency of 75%.
3. Minimum data sheet value of $I^2f$.
4. Transformer primary inductance tolerance of ±10%.
5. Reflected output voltage ($V_{OR}$) of 135 V.
6. Voltage only output of 12 V with a fast PN rectifier diode.
7. Continuous conduction mode operation with transient $K_p$* value of 0.25.
8. Increased current limit is selected for peak and open frame power columns and standard current limit for adapter columns.
9. The part is board mounted with SOURCE pins soldered to sufficient area of copper and/or a heat sink is used to keep the SOURCE pin temperature at or below 110 °C for P and G package and 100 °C for D packaged devices.
10. Ambient temperature of 50 °C for open frame designs and 40 °C for sealed adapters.

*Below a value of 1, $K_p$ is the ratio of ripple to peak primary current. To prevent reduced power capability due to premature termination of switching cycles a transient $K_p$ limit of ≥0.25 is recommended. This prevents the initial current limit ($I_{INIT}$) from being exceeded at MOSFET turn-on.

For reference, Table 2 provides the minimum practical power delivered from each family member at the three selectable current limit values. This assumes open frame operation (not thermally limited) and otherwise the same conditions as listed above. These numbers are useful to identify the correct current limit to select for a given device and output power requirement.

**Overvoltage Protection**

The output overvoltage protection provided by TinySwitch-LT uses an internal latch that is triggered by a threshold current of approximately 5.5 mA into the BP/M pin. In addition to an internal filter, the BP/M pin capacitor forms an external filter providing noise immunity from inadvertent triggering. For the bypass capacitor to be effective as a high frequency filter, the capacitor should be located as close as possible to the SOURCE and BP/M pins of the device.

For best performance of the OVP function, it is recommended that a relatively high bias winding voltage is used, in the range of 15 V-30 V. This minimizes the error voltage on the bias winding due to leakage inductance and also ensures adequate voltage during no-load operation from which to supply the BP/M pin for reduced no-load consumption.

Selecting the Zener diode voltage to be approximately 6 V above the bias winding voltage (28 V for 22 V bias winding) gives good OVP performance for most designs, but can be adjusted to compensate for variations in leakage inductance. Adding additional filtering can be achieved by inserting a low value (10 Ω to 47 Ω) resistor in series with the bias winding diode and/or the OVP Zener as shown by R7 and R3 in Figure 12. The resistor in series with the OVP Zener also limits the maximum current into the BP/M pin.

**Reducing No-load Consumption**

As TinySwitch-LT is self-powered from the BP/M pin capacitor, there is no need for an auxiliary or bias winding to be provided on the transformer for this purpose. Typical no-load consumption when self-powered is <150 mW at 265 VAC input. The addition of a bias winding can reduce this down to <50 mW by supplying the TinySwitch-LT from the lower bias voltage and inhibiting the internal high-voltage current source. To achieve this, select the value of the resistor (R8 in Figure 12) to provide the data sheet DRAIN supply current. In practice, due to the reduction of the bias voltage at low load, start with a value equal to 40% greater than the data sheet maximum current, and then increase the value of the resistor to give the lowest no-load consumption.

## Peak Output Power Table

| Output Power Table | | | | | | |
|---|---|---|---|---|---|---|
| Product | 230 VAC ± 15% | | | 85-265 VAC | | |
| | $I_{LIMIT}$-1 | $I_{LIMIT}$ | $I_{LIMIT}$+1 | $I_{LIMIT}$-1 | $I_{LIMIT}$ | $I_{LIMIT}$+1 |
| **TNY174P** | 9.1 W | 10.9 W | 9.1 W | 7.1 W | 8.5 W | 7.1 W |
| **TNY175P** | 10.8 W | 12 W | 15.1 W | 8.4 W | 9.3 W | 11.8 W |
| **TNY176P** | 11.8 W | 15.3 W | 19.4 W | 9.2 W | 11.9 W | 15.1 W |
| **TNY177P** | 15.1 W | 19.6 W | 23.7 W | 11.8 W | 15.3 W | 18.5 W |
| **TNY178P** | 19.4 W | 24 W | 28 W | 15.1 W | 18.6 W | 21.8 W |
| **TNY179P** | 23.7 W | 28.4 W | 32.2 W | 18.5 W | 22 W | 25.2 W |
| **TNY180P** | 28 W | 32.7 W | 36.6 W | 21.8 W | 25.4 W | 28.5 W |

*Table 2. Minimum Practical Power at Three Selectable Current Limit Levels.*

### Audible Noise

The cycle skipping mode of operation used in TinySwitch-LT can generate audio frequency components in the transformer. To limit this audible noise generation the transformer should be designed such that the peak core flux density is below 3000 Gauss (300 mT). Following this guideline and using the standard transformer production technique of dip varnishing practically eliminates audible noise. Vacuum impregnation of the transformer should not be used due to the high primary capacitance and increased losses that result. Higher flux densities are possible, however careful evaluation of the audible noise performance should be made using production transformer samples before approving the design.

Ceramic capacitors that use dielectrics such as Z5U, when used in clamp circuits, may also generate audio noise. If this is the case, try replacing them with a capacitor having a different dielectric or construction, for example a film type.

## TinySwitch-LT Layout Considerations

### Layout

See Figure 13 for a recommended circuit board layout for TinySwitch-LT.

### Single Point Grounding

Use a single point ground connection from the input filter capacitor to the area of copper connected to the SOURCE pins.

### Bypass Capacitor ($C_{BP}$)

The BP/M pin capacitor should be located as near as possible to the BP/M and SOURCE pins.

### ENABLE Pin

Keep traces connected to the EN pin short and, as far as is practical, away from all other traces and nodes above source potential including, but not limited to, the BYPASS and DRAIN pins.

### Primary Loop Area

The area of the primary loop that connects the input filter capacitor, transformer primary and TinySwitch-LT together should be kept as small as possible.

### Primary Clamp Circuit

A clamp is used to limit peak voltage on the DRAIN pin at turn off. This can be achieved by using an RCD clamp or a Zener (~200 V) and diode clamp across the primary winding. In all cases, to minimize EMI, care should be taken to minimize the circuit path from the clamp components to the transformer and TinySwitch-LT.

### Thermal Considerations

The four SOURCE pins are internally connected to the IC lead frame and provide the main path to remove heat from the device. Therefore all the SOURCE pins should be connected to a copper area underneath the TinySwitch-LT to act not only as a single point ground, but also as a heat sink. As this area is connected to the quiet source node, this area should be maximized for good heat sinking. Similarly for axial output diodes, maximize the PCB area connected to the cathode.

### Y Capacitor

The placement of the Y capacitor should be directly from the primary input filter capacitor positive terminal to the common/return terminal of the transformer secondary. Such a placement will route high magnitude common mode surge currents away from the TinySwitch-LT device. Note – if an input π (C, L, C) EMI filter is used then the inductor in the filter should be placed between the negative terminals of the input filter capacitors.

### Optocoupler

Place the optocoupler physically close to the TinySwitch-LT to minimizing the primary-side trace lengths. Keep the high current, high-voltage drain and clamp traces away from the optocoupler to prevent noise pick up.

### Output Diode

For best performance, the area of the loop connecting the secondary winding, the output diode and the output filter capacitor, should be minimized. In addition, sufficient copper area should be provided at the anode and cathode terminals of the diode for heat sinking. A larger area is preferred at the quiet cathode terminal. A large anode area can increase high frequency radiated EMI.

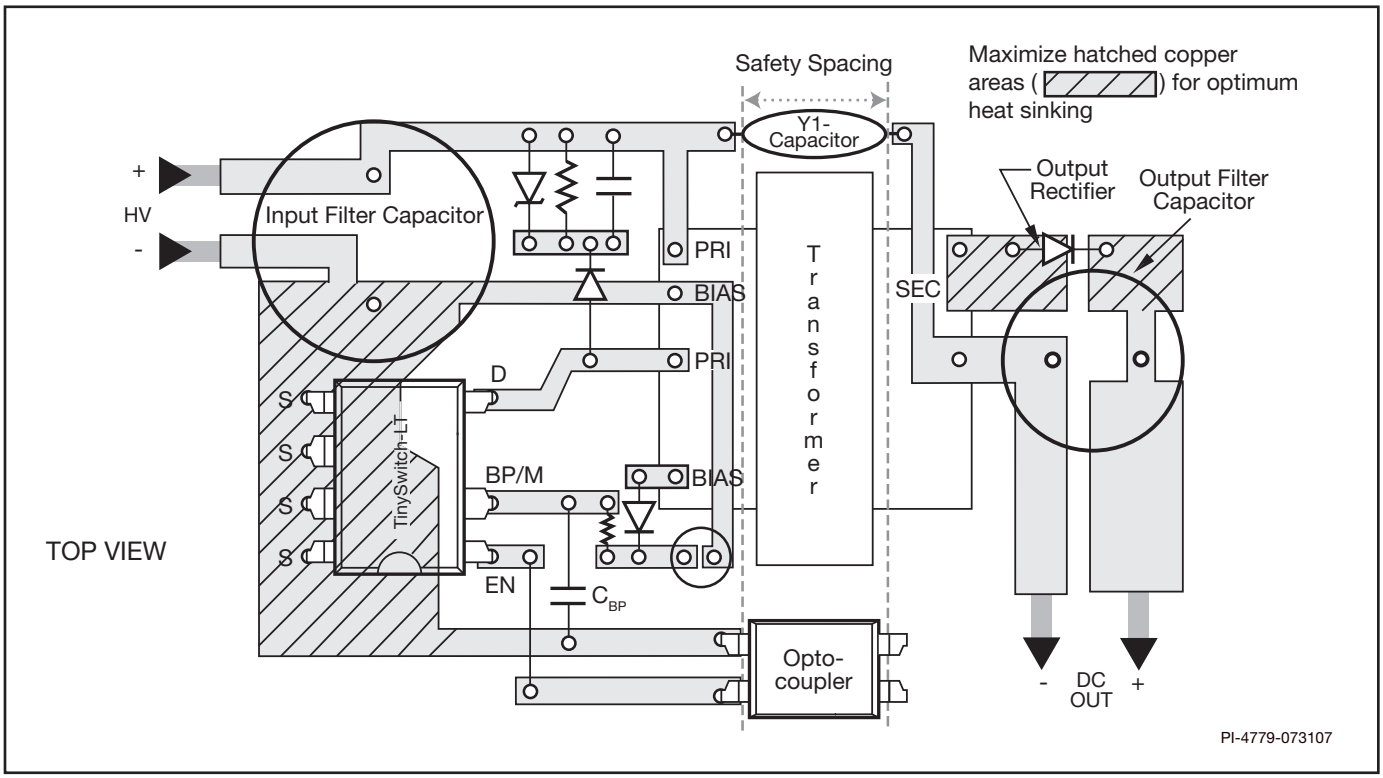


*Figure 13. Recommended Circuit Board Layout for TinySwitch-LT.*

**PC Board Leakage Currents**

TinySwitch-LT is designed to optimize energy efficiency across the power range and particularly in standby/no-load conditions. Current consumption has therefore been minimized to achieve this performance. The EN pin for example operates with very low threshold current levels and it is therefore recommended to limit parasitic currents into and out of the EN pin to levels below 1 μA.

Parasitic leakage currents into the EN pin are normally well below this 1μA level when PC board assembly is in a well controlled production facility. However, high humidity conditions together with board and/or package contamination, either from no-clean flux or other contaminants, can reduce the surface resistivity enough to allow parasitic currents >1 μA to flow into the EN pin. These currents can flow from higher voltage exposed solder pads close to the EN pin such as the BP/M pin solder pad.

If the contamination levels in the PC board assembly facility are unknown, the application is open frame or operates in a high pollution degree environment, then an optional 390 kΩ resistor should be added from EN pin to SOURCE pin to ensure that the parasitic leakage current into the EN pin is low.

Note that typical values for surface insulation resistance (SIR) where no-clean flux has been applied according to the suppliers' guidelines are >>10 MΩ and do not cause this issue.

## Quick Design Checklist

As with any power supply design, all TinySwitch-LT designs should be verified on the bench to make sure that component specifications are not exceeded under worst case conditions. The following minimum set of tests is strongly recommended:

1. Maximum drain voltage – Verify that the worst case $V_{DS}$ does not exceed 650 V at highest input voltage and peak (overload) output power.
2. Maximum drain current – At maximum ambient temperature, maximum input voltage and peak output (overload) power, verify drain current waveforms for any signs of transformer saturation and excessive leading edge current spikes at start-up. Repeat under steady state conditions and verify that the leading edge current spike event is below $I_{LIMIT(Min)}$ at the end of the $t_{LEB(Min)}$. Under all conditions, the maximum drain current should be below the specified absolute maximum ratings.
3. Thermal Check – At specified maximum output power, minimum input voltage and maximum ambient temperature, verify that the temperature specifications are not exceeded for TinySwitch-LT, transformer, output diode, and output capacitors. Enough thermal margin should be allowed for part-to-part variation of the $R_{DS(ON)}$ of TinySwitch-LT as specified in the data sheet. Under low-line, maximum power, a maximum TinySwitch-LT SOURCE pin temperature of 110 °C is recommended to allow for these variations.

## Absolute Maximum Ratings[1,5]

DRAIN Voltage .....-0.3 V to 650 V
DRAIN Peak Current: TNY174 ..... 400 (750) mA[2]
TNY175 ..... 560 (1050) mA[2]
TNY176 ..... 720 (1350) mA[2]
TNY177 ..... 880 (1650) mA[2]
TNY178 .....1040 (1950) mA[2]
TNY179 .....1200 (2250) mA[2]
TNY180 .....1360 (2550) mA[2]
ENABLE Voltage ..... -0.3 V to 9 V
ENABLE Current .....100 mA
BP/M Voltage .....-0.3 V to 9 V
Storage Temperature.....-65 °C to 150 °C
Operating Junction Temperature[3] .....-40 °C to 150 °C
Lead Temperature[4] .....260 °C

Notes:
1. All voltages referenced to SOURCE, $T_A$ = 25 °C.
2. The higher peak DRAIN current is allowed while the DRAIN voltage is simultaneously less than 400 V.
3. Normally limited by internal circuitry.
4. 1/16 in. from case for 5 seconds.
5. Maximum ratings specified may be applied one at a time, without causing permanent damage to the product. Exposure to Absolute Maximum Rating conditions for extended periods of time may affect product reliability.

## Thermal Impedance

Thermal Impedance: P Package:
($\theta_{JA}$) ..... 70 °C/W[2]; 60 °C/W[3]
($\theta_{JC}$)[1] .....11 °C/W
D Package:
($\theta_{JA}$) ..... 100 °C/W[2]; 80 °C/W[3]
($\theta_{JC}$)[2] .....30 °C/W

Notes:
1. Measured on the SOURCE pin close to plastic interface.
2. Soldered to 0.36 sq. in. (232 mm$^2$), 2 oz. (610 g/m$^2$) copper clad.
3. Soldered to 1 sq. in. (645 mm$^2$), 2 oz. (610 g/m$^2$) copper clad.

| Parameter | Symbol | Conditions SOURCE = 0 V; $T_J$ = -40 to 125 °C See Figure 14 (Unless Otherwise Specified) | | Min | Typ | Max | Units |
|---|---|---|---|---|---|---|---|
| **Control Functions** | | | | | | | |
| **Output Frequency in Standard Mode** | $f_{OSC}$ | $T_J$ = 25 °C See Figure 4 | Average | 124 | 132 | 140 | kHz |
| | | | Peak-to-peak Jitter | | 8 | | |
| **Maximum Duty Cycle** | $DC_{MAX}$ | S1 Open | | 62 | 65 | | % |
| **ENABLE Pin Upper Turn-Off Threshold Current** | $I_{DIS}$ | | | -150 | -115 | -90 | µA |
| **ENABLE Pin Voltage** | $V_{EN}$ | $I_{EN}$ = 25 µA | | 1.8 | 2.2 | 2.6 | V |
| | | $I_{EN}$ = -25 µA | | 0.8 | 1.2 | 1.6 | |
| **DRAIN Supply Current** | $I_{S1}$ | EN Current > $I_{DIS}$ (MOSFET Not Switching) See Note A | | | 290 | | µA |
| | $I_{S2}$ | EN Open (MOSFET Switching at $f_{OSC}$) See Note B | TNY174P/D | | 275 | 360 | µA |
| | | | TNY175P/D | | 295 | 400 | |
| | | | TNY176P/D | | 310 | 430 | |
| | | | TNY177P/D | | 365 | 460 | |
| | | | TNY178P/D | | 445 | 595 | |
| | | | TNY179P | | 510 | 640 | |
| | | | TNY180P | | 630 | 760 | |

| Parameter | Symbol | Conditions<br>SOURCE = 0 V; $T_J$ = -40 to 125 °C<br>See Figure 14<br>(Unless Otherwise Specified) | | Min | Typ | Max | Units |
|---|---|---|---|---|---|---|---|
| **Control Functions (cont.)** | | | | | | | |
| **BP/M Pin Charge Current** | $I_{CH1}$ | $V_{BP/M}$ = 0 V,<br>$T_J$ = 25 °C<br>See Note C, D | TNY174 | -6 | -3.8 | -1.8 | mA |
| | | | TNY175-179 | -8.3 | -5.4 | -2.5 | |
| | | | TNY180 | -9.7 | -6.8 | -3.9 | |
| | $I_{CH2}$ | $V_{BP/M}$ = 4 V,<br>$T_J$ = 25 °C<br>See Note C, D | TNY174 | -4.1 | -2.3 | -1 | |
| | | | TNY175-179 | -5 | -3.5 | -1.5 | |
| | | | TNY180 | -6.6 | -4.6 | -2.1 | |
| **BP/M Pin Voltage** | $V_{BP/M}$ | See Note C | | 5.6 | 5.85 | 6.15 | V |
| **BP/M Pin Voltage Hysteresis** | $V_{BP/MH}$ | | | 0.80 | 0.95 | 1.20 | V |
| **BP/M Pin Shunt Voltage** | $V_{SHUNT}$ | $I_{BP}$ = 2 mA | | 6.0 | 6.4 | 6.7 | V |
| **Circuit Protection** | | | | | | | |
| **Standard Current Limit (BP/M Capacitor = 0.1 μF) See Note D** | $I_{LIMIT}$ | di/dt = 50 mA/μs<br>$T_J$ = 25 °C<br>See Note E | TNY174P | 233 | 250 | 267 | mA |
| | | | TNY174D | 233 | 250 | 273 | |
| | | di/dt = 55 mA/μs<br>$T_J$ = 25 °C<br>See Note E | TNY175P | 256 | 275 | 294 | |
| | | | TNY175D | 256 | 275 | 300 | |
| | | di/dt = 70 mA/μs<br>$T_J$ = 25 °C<br>See Note E | TNY176P | 326 | 350 | 374 | |
| | | | TNY176D | 326 | 350 | 382 | |
| | | di/dt = 90 mA/μs<br>$T_J$ = 25 °C<br>See Note E | TNY177P | 419 | 450 | 481 | |
| | | | TNY177D | 419 | 450 | 491 | |
| | | di/dt = 110 mA/μs<br>$T_J$ = 25 °C<br>See Note E | TNY178P | 512 | 550 | 588 | |
| | | | TNY178D | 512 | 550 | 599 | |
| | | di/dt = 130 mA/μs<br>$T_J$ = 25 °C<br>See Note E | TNY179P | 605 | 650 | 695 | |
| | | di/dt = 150 mA/μs<br>$T_J$ = 25 °C<br>See Note E | TNY180P | 698 | 750 | 802 | |

| Parameter | Symbol | Conditions<br>SOURCE = 0 V; $T_J$ = -40 to 125 °C<br>See Figure 14<br>(Unless Otherwise Specified) | | Min | Typ | Max | Units |
|---|---|---|---|---|---|---|---|
| **Circuit Protection (cont.)** | | | | | | | |
| **Reduced Current Limit (BP/M Capacitor = 1 μF) See Note D** | $I_{LIMITred}$ | di/dt = 50 mA/μs<br>$T_J$ = 25 °C<br>See Note E | TNY174P | 196 | 210 | 233 | mA |
| | | | TNY174D | 196 | 210 | 237 | |
| | | di/dt = 55 mA/μs<br>$T_J$ = 25 °C<br>See Note E | TNY175P | 233 | 250 | 277 | |
| | | | TNY175D | 233 | 250 | 283 | |
| | | di/dt = 70 mA/μs<br>$T_J$ = 25 °C<br>See Notes E | TNY176P | 256 | 275 | 305 | |
| | | | TNY176D | 256 | 275 | 311 | |
| | | di/dt = 90 mA/μs<br>$T_J$ = 25 °C<br>See Notes E | TNY177P | 326 | 350 | 388 | |
| | | | TNY177D | 326 | 350 | 396 | |
| | | di/dt = 110 mA/μs<br>$T_J$ = 25 °C<br>See Notes E | TNY178P | 419 | 450 | 499 | |
| | | | TNY178D | 419 | 450 | 508 | |
| | | di/dt = 130 mA/μs<br>$T_J$ = 25 °C<br>See Notes E | TNY179P | 512 | 550 | 610 | |
| | | di/dt = 150 mA/μs<br>$T_J$ = 25 °C<br>See Notes E | TNY180P | 605 | 650 | 721 | |
| **Increased Current Limit (BP/M Capacitor = 10 μF) See Note D** | $I_{LIMITinc}$ | di/dt = 50 mA/μs<br>$T_J$ = 25 °C<br>See Notes E, F | TNY174P | 196 | 210 | 233 | mA |
| | | | TNY174D | 196 | 210 | 237 | |
| | | di/dt = 55 mA/μs<br>$T_J$ = 25 °C<br>See Notes E | TNY175P | 326 | 350 | 388 | |
| | | | TNY175D | 326 | 350 | 396 | |
| | | di/dt = 70 mA/μs<br>$T_J$ = 25 °C<br>See Notes E | TNY176P | 419 | 450 | 499 | |
| | | | TNY176D | 419 | 450 | 509 | |
| | | di/dt = 90 mA/μs<br>$T_J$ = 25 °C<br>See Notes E | TNY177P | 512 | 550 | 610 | |
| | | | TNY177D | 512 | 550 | 622 | |
| | | di/dt = 110 mA/μs<br>$T_J$ = 25 °C<br>See Notes E | TNY178P | 605 | 650 | 721 | |
| | | | TNY178D | 605 | 650 | 734 | |
| | | di/dt = 130 mA/μs<br>$T_J$ = 25 °C<br>See Notes E | TNY179P | 698 | 750 | 833 | |
| | | di/dt = 150 mA/μs<br>$T_J$ = 25 °C<br>See Notes E | TNY180P | 791 | 850 | 943 | |

| Parameter | Symbol | Conditions<br>SOURCE = 0 V; $T_J$ = -40 to 125 °C<br>See Figure 14<br>(Unless Otherwise Specified) | | Min | Typ | Max | Units |
|---|---|---|---|---|---|---|---|
| **Circuit Protection (cont.)** | | | | | | | |
| **Power Coefficient** | $I^2f$ | Standard Current Limit, $I^2f = I_{LIMIT(TYP)}^2 \times f_{OSC(TYP)}$ | TNY174-180P | 0.9 × $I^2f$ | $I^2f$ | 1.12 × $I^2f$ | $A^2Hz$ |
| | | | TNY174-178D | 0.9 × $I^2f$ | $I^2f$ | 1.16 × $I^2f$ | |
| | | Reduced Current Limit, $I^2f = I_{LIMITred(TYP)}^2 \times f_{OSC(TYP)}$ | TNY174-180P | 0.9 × $I^2f$ | $I^2f$ | 1.16 × $I^2f$ | |
| | | | TNY174-178D | 0.9 × $I^2f$ | $I^2f$ | 1.20 × $I^2f$ | |
| | | Increased Current Limit, $I^2f = I_{LIMITinc(TYP)}^2 \times f_{OSC(TYP)}$ | TNY174-180P | 0.9 × $I^2f$ | $I^2f$ | 1.16 × $I^2f$ | |
| | | | TNY174-178D | 0.9 × $I^2f$ | $I^2f$ | 1.20 × $I^2f$ | |
| **Initial Current Limit** | $I_{INIT}$ | See Figure 19<br>$T_J$ = 25 °C, See Note G | | 0.75 × $I_{LIMIT(MIN)}$ | | | mA |
| **Leading Edge Blanking Time** | $t_{LEB}$ | $T_J$ = 25 °C<br>See Note G | | 170 | 215 | | ns |
| **Current Limit Delay** | $t_{ILD}$ | $T_J$ = 25 °C<br>See Note G, H | | | 150 | | ns |
| **Thermal Shutdown Temperature** | $T_{SD}$ | | | 135 | 142 | 150 | °C |
| **Thermal Shutdown Hysteresis** | $T_{SDH}$ | | | | 75 | | °C |
| **BP/M Pin Shutdown Threshold Current** | $I_{SD}$ | | | 4 | 6.5 | 9 | mA |
| **BP/M Pin Power-Up Reset Threshold Voltage** | $V_{BP/M(RESET)}$ | | | 1.6 | 2.6 | 3.6 | V |
| **Output** | | | | | | | |
| **ON-State Resistance** | $R_{DS(ON)}$ | TNY174P/D<br>$I_D$ = 25 mA | $T_J$ = 25 °C | | 28 | 32 | Ω |
| | | | $T_J$ = 100 °C | | 42 | 48 | |
| | | TNY175P/D<br>$I_D$ = 28 mA | $T_J$ = 25 °C | | 19 | 22 | |
| | | | $T_J$ = 100 °C | | 29 | 33 | |
| | | TNY176P/D<br>$I_D$ = 35 mA | $T_J$ = 25 °C | | 14 | 16 | |
| | | | $T_J$ = 100 °C | | 21 | 24 | |

| Parameter | Symbol | Conditions<br>SOURCE = 0 V; $T_J$ = -40 to 125 °C<br>See Figure 14<br>(Unless Otherwise Specified) | | Min | Typ | Max | Units |
|---|---|---|---|---|---|---|---|
| **Output (cont.)** | | | | | | | |
| **ON-State Resistance** | $R_{DS(ON)}$ | TNY177P/D<br>$I_D$ = 45 mA | $T_J$ = 25 °C | | 7.8 | 9.0 | Ω |
| | | | $T_J$ = 100 °C | | 11.7 | 13.5 | |
| | | TNY178P/D<br>$I_D$ = 55 mA | $T_J$ = 25 °C | | 5.2 | 6.0 | |
| | | | $T_J$ = 100 °C | | 7.8 | 9.0 | |
| | | TNY179P<br>$I_D$ = 65 mA | $T_J$ = 25 °C | | 3.9 | 4.5 | |
| | | | $T_J$ = 100 °C | | 5.8 | 6.7 | |
| | | TNY180P<br>$I_D$ = 75 mA | $T_J$ = 25 °C | | 2.6 | 3.0 | |
| | | | $T_J$ = 100 °C | | 3.9 | 4.5 | |
| **OFF-State Drain Leakage Current** | $I_{DSS1}$ | $V_{BP/M}$ = 6.2 V<br>$V_{EN}$ = 0 V<br>$V_{DS}$ = 520 V<br>$T_J$ = 125 °C<br>See Note I | TNY174-176 | | | 50 | μA |
| | | | TNY177-178 | | | 100 | |
| | | | TNY179-180 | | | 200 | |
| | $I_{DSS2}$ | $V_{BP/M}$ = 6.2 V<br>$V_{EN}$ = 0 V | $V_{DS}$ = 375 V,<br>$T_J$ = 50 °C<br>See Note G, I | | 15 | | |
| **Breakdown Voltage** | $BV_{DSS}$ | $V_{BP}$ = 6.2 V, $V_{EN}$ = 0 V,<br>See Note J, $T_J$ = 25 °C | | 650 | | | V |
| **DRAIN Supply Voltage** | | | | 50 | | | V |
| **Auto-Restart ON-Time at $f_{osc}$** | $t_{AR}$ | $T_J$ = 25 °C<br>See Note K | | | 64 | | ms |
| **Auto-Restart Duty Cycle** | $DC_{AR}$ | $T_J$ = 25 °C | | | 3 | | % |

NOTES:

A. $I_{S1}$ is an accurate estimate of device controller current consumption at no-load, since operating frequency is so low under these conditions. Total device consumption at no-load is the sum of $I_{S1}$ and $I_{DSS2}$.

B. Since the output MOSFET is switching, it is difficult to isolate the switching current from the supply current at the DRAIN. An alternative is to measure the BP/M pin current at 6.1 V.

C. BP/M pin is not intended for sourcing supply current to external circuitry.

D. To ensure correct current limit it is recommended that nominal 0.1 mF / 1 mF / 10 mF capacitors are used. In addition, the BP/M capacitor value tolerance should be equal or better than indicated below across the ambient temperature range of the target application. The minimum and maximum capacitor values are guaranteed by characterization.

| Nominal BP/M Pin Cap Value | Tolerance Relative to Nominal Capacitor Value | |
|---|---|---|
| | Min | MAX |
| 0.1 μF | -60% | +100% |
| 1 μF | -50% | +100% |
| 10 μF | -50% | NA |

E. For current limit at other di/dt values, refer to Figure 21.

F. TNY174 does not set an increased current limit value, but with a 10 mF BP/M pin capacitor the current limit is the same as with a 1 mF BP/M pin capacitor (reduced current limit value).

G. This parameter is derived from characterization.

H. This parameter is derived from the change in current limit measured at 1X and 4X of the di/dt shown in the $I_{LIMIT}$ specification.

I. $I_{DSS1}$ is the worst-case OFF-state leakage specification at 80% of $BV_{DSS}$ and maximum operating junction temperature. $I_{DSS2}$ is a typical specification under worst-case application conditions (rectified 265 VAC) for no-load consumption calculations.

J. Breakdown voltage may be checked against minimum $BV_{DSS}$ specification by ramping the DRAIN pin voltage up to but not exceeding minimum $BV_{DSS}$.

K. Auto-restart on time has the same temperature characteristics as the oscillator (inversely proportional to frequency).

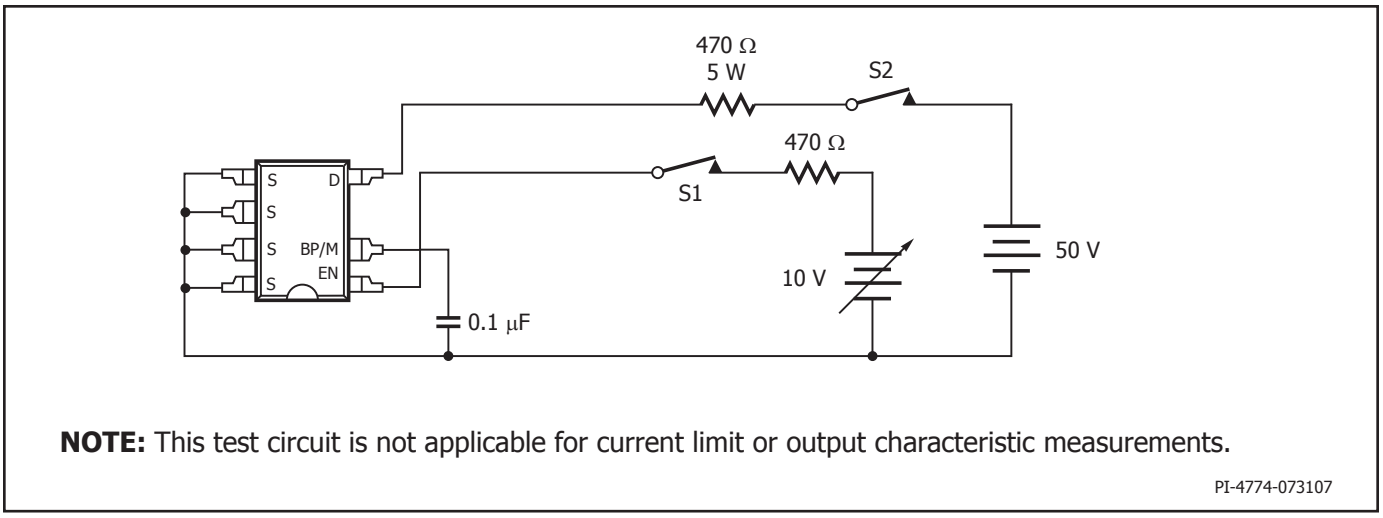


*Figure 14. General Test Circuit.*

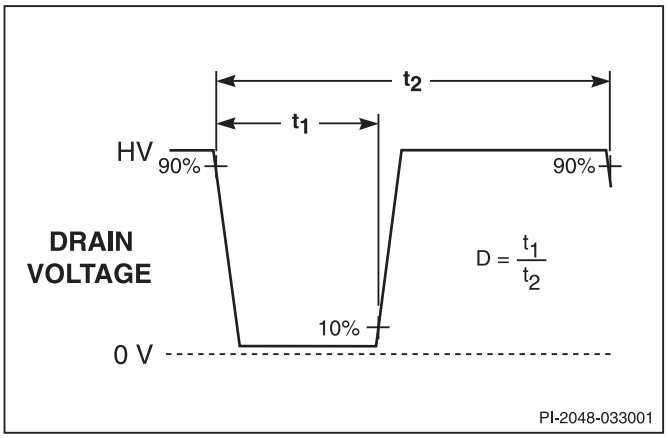


*Figure 15. Duty Cycle Measurement.*

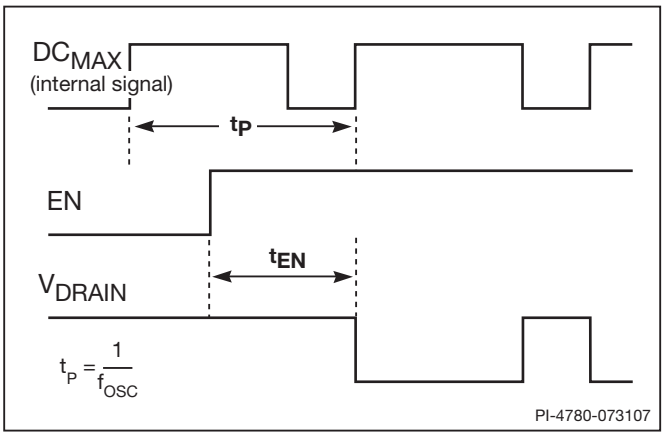


*Figure 16. Output Enable Timing.*

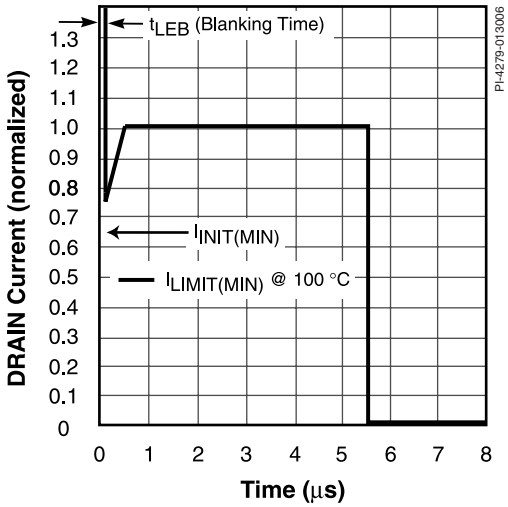


*Figure 17. Current Limit Envelope.*

## Typical Performance Characteristics

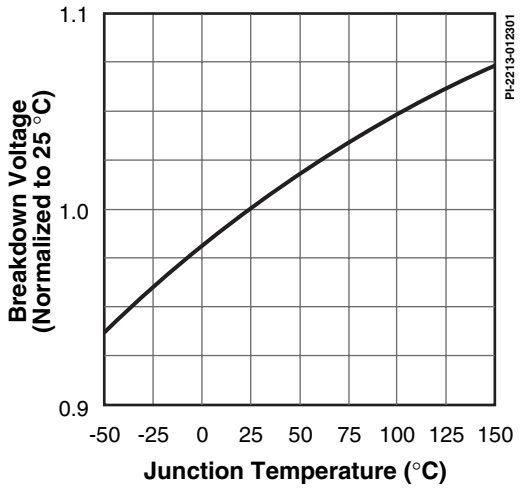


*Figure 18. Breakdown vs. Temperature.*

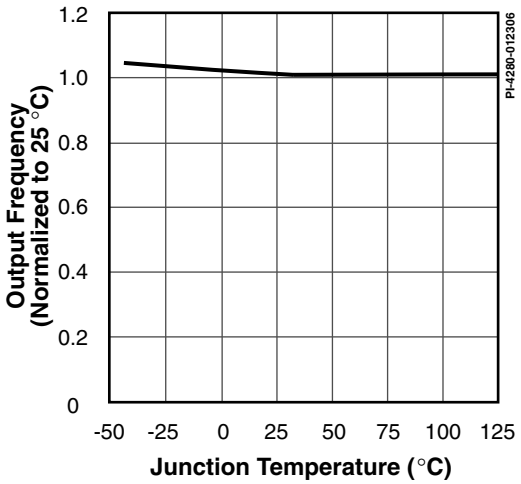


*Figure 19. Frequency vs. Temperature.*

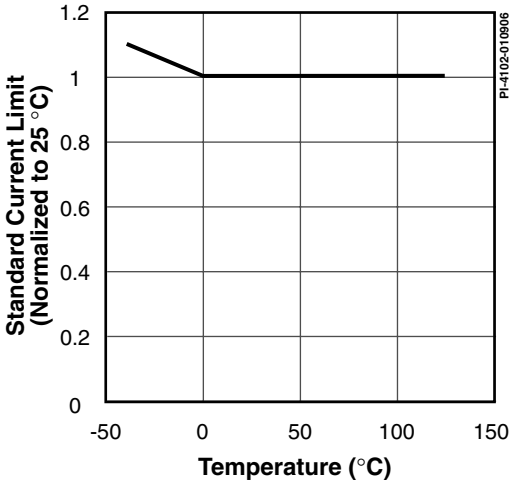


*Figure 20. Standard Current Limit vs. Temperature.*

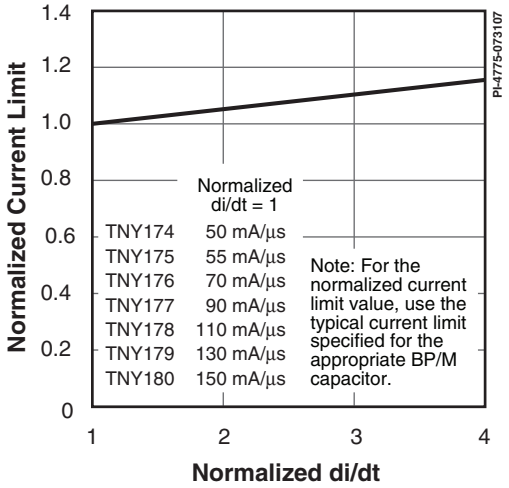


*Figure 21. Current Limit vs. di/dt.*

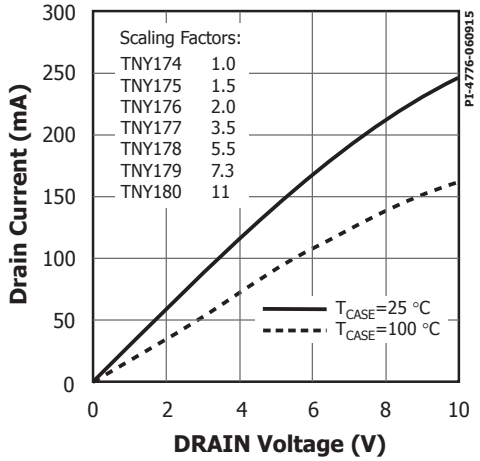


*Figure 22. Output Characteristic.*

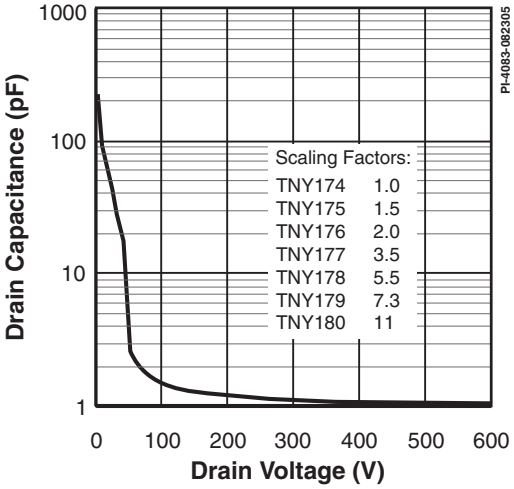


*Figure 23. $C_{OSS}$ vs. Drain Voltage.*

## Typical Performance Characteristics (cont.)

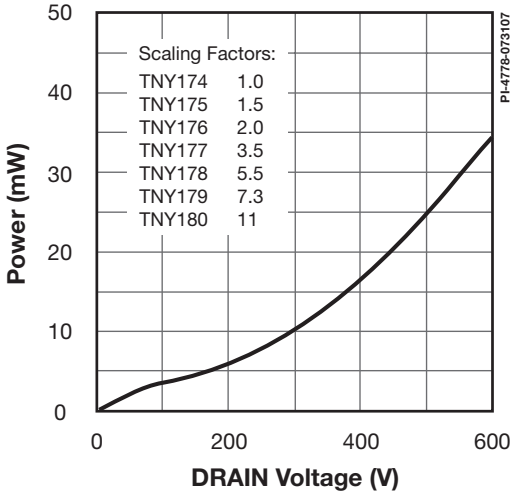


*Figure 24. Drain Capacitance Power.*

## PDIP-8C (P Package)

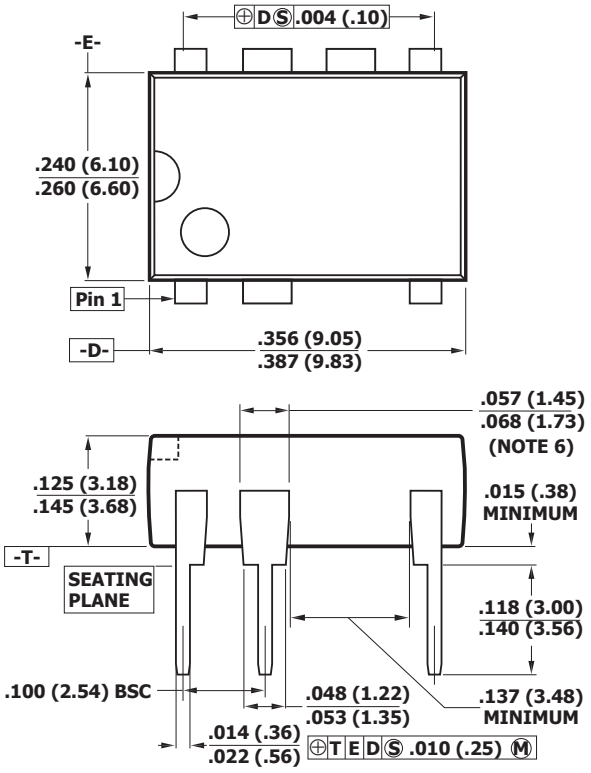


**Notes:**

1. Package dimensions conform to JEDEC specification MS-001-AB (Issue B 7/85) for standard dual-in-line (DIP) package with .300 inch row spacing.
2. Controlling dimensions are inches. Millimeter sizes are shown in parentheses.
3. Dimensions shown do not include mold flash or other protrusions. Mold flash or protrusions shall not exceed .006 (.15) on any side.
4. Pin locations start with Pin 1, and continue counter-clockwise to Pin 8 when viewed from the top. The notch and/or dimple are aids in locating Pin 1. Pin 3 is omitted.
5. Minimum metal to metal spacing at the package body for the omitted lead location is .137 inch (3.48 mm).
6. Lead width measured at package body.
7. Lead spacing measured with the leads constrained to be perpendicular to plane T.

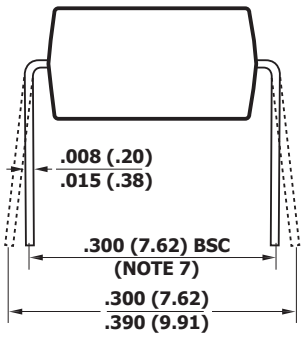


**P08C**

PI-3933-081716

## SO-8C (D Package)

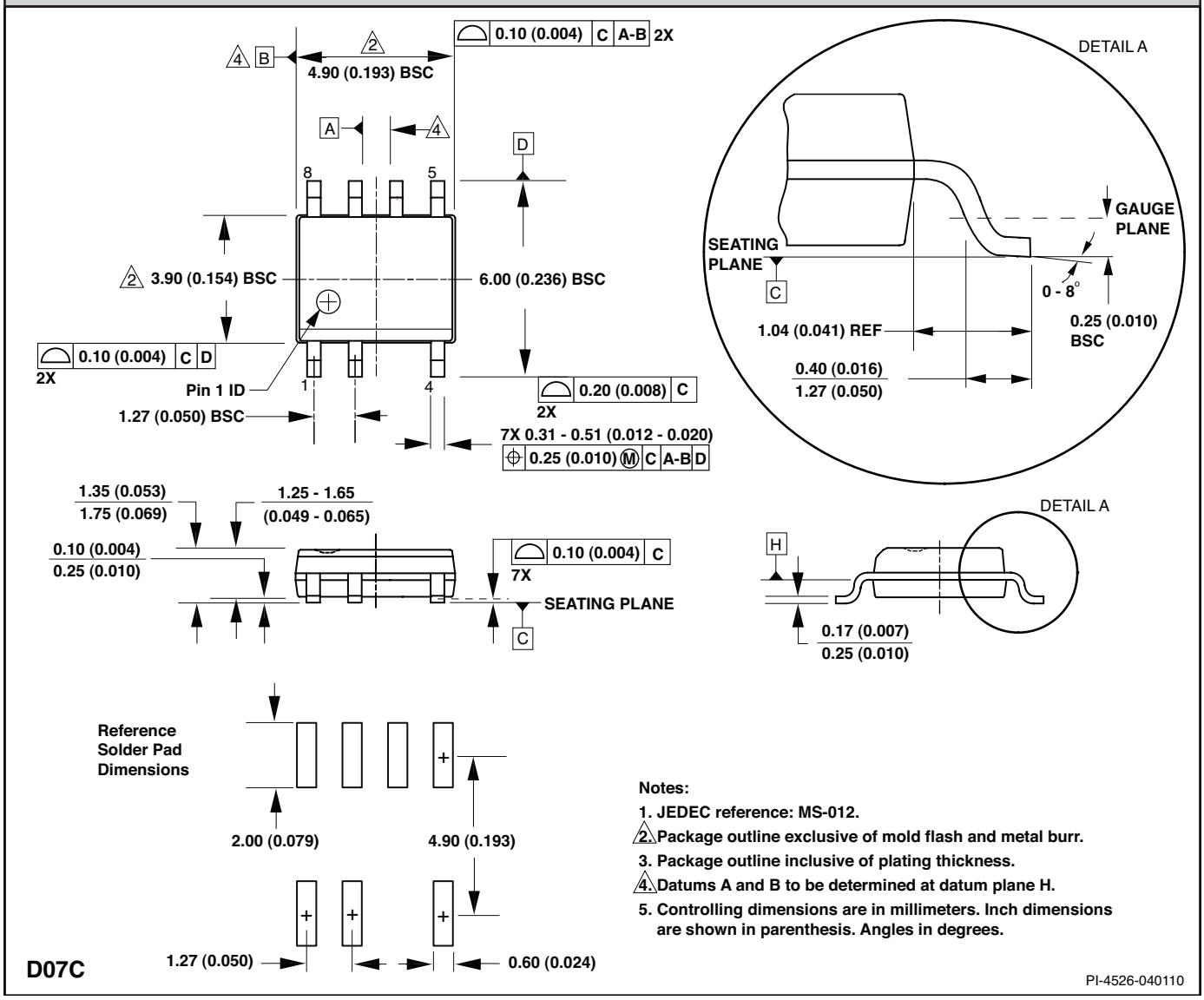


**Notes:**

1. JEDEC reference: MS-012.
2. Package outline exclusive of mold flash and metal burr.
3. Package outline inclusive of plating thickness.
4. Datums A and B to be determined at datum plane H.
5. Controlling dimensions are in millimeters. Inch dimensions are shown in parenthesis. Angles in degrees.

## Part Ordering Information

- **TinySwitch Product Family**
- **Series Number**
- **Package Identifier**

| | |
|---|---|
| P | Plastic DIP-8C |
| D | Plastic Surface Mount SO-8C |

- **Lead Finish**

| | |
|---|---|
| N | Pure Matte Tin (Pb-Free) (Not available in D Package) |
| G | RoHS Compliant and Halogen Free (D Package only) |

- **Tape & Reel and Other Options**

| | |
|---|---|
| Blank | Standard Configuration |
| TL | Tape & Reel, 2.5 k pcs for D Package. Not available for P Package. |

**TNY 178 P N - TL**

| Revision | Notes | Date |
|---|---|---|
| A | Initial Release | 08/07 |
| B | Minor text change | 08/10/07 |
| C | Updated Part Ordering Information section with Halogen Free and added D package part.<br>Corrected electrical symbol μF in three locations under Circuit Protection in Parameter Table. | 07/09<br>03/10 |
| D | Added TNY177D. | 08/12 |
| E | Added TNY178D. | 09/13 |
| F | Updated with new Brand Style. | 12/15 |
| G | Updated PDIP-8C (P Package) per PCN-16232. | 08/16 |

**For the latest updates, visit our website: www.power.com**

Power Integrations reserves the right to make changes to its products at any time to improve reliability or manufacturability. Power Integrations does not assume any liability arising from the use of any device or circuit described herein. POWER INTEGRATIONS MAKES NO WARRANTY HEREIN AND SPECIFICALLY DISCLAIMS ALL WARRANTIES INCLUDING, WITHOUT LIMITATION, THE IMPLIED WARRANTIES OF MERCHANTABILITY, FITNESS FOR A PARTICULAR PURPOSE, AND NON-INFRINGEMENT OF THIRD PARTY RIGHTS.

**Patent Information**

The products and applications illustrated herein (including transformer construction and circuits external to the products) may be covered by one or more U.S. and foreign patents, or potentially by pending U.S. and foreign patent applications assigned to Power Integrations. A complete list of Power Integrations patents may be found at www.power.com. Power Integrations grants its customers a license under certain patent rights as set forth at http://www.power.com/ip.htm.

**Life Support Policy**

POWER INTEGRATIONS PRODUCTS ARE NOT AUTHORIZED FOR USE AS CRITICAL COMPONENTS IN LIFE SUPPORT DEVICES OR SYSTEMS WITHOUT THE EXPRESS WRITTEN APPROVAL OF THE PRESIDENT OF POWER INTEGRATIONS. As used herein:

1. A Life support device or system is one which, (i) is intended for surgical implant into the body, or (ii) supports or sustains life, and (iii) whose failure to perform, when properly used in accordance with instructions for use, can be reasonably expected to result in significant injury or death to the user.
2. A critical component is any component of a life support device or system whose failure to perform can be reasonably expected to cause the failure of the life support device or system, or to affect its safety or effectiveness.

The PI logo, TOPSwitch, TinySwitch, SENZero, SCALE-iDriver, Qspeed, PeakSwitch, LYTSwitch, LinkZero, LinkSwitch, InnoSwitch, HiperTFS, HiperPFS, HiperLCS, DPA-Switch, CAPZero, Clampless, EcoSmart, E-Shield, Filterfuse, FluxLink, StakFET, PI Expert and PI FACTS are trademarks of Power Integrations, Inc. Other trademarks are property of their respective companies. ©2016, Power Integrations, Inc.

## Power Integrations Worldwide Sales Support Locations

**World Headquarters**
5245 Hellyer Avenue
San Jose, CA 95138, USA.
Main: +1-408-414-9200
Customer Service:
Phone: +1-408-414-9665
Fax: +1-408-414-9765
e-mail: usasales@power.com

**China (Shanghai)**
Rm 2410, Charity Plaza, No. 88
North Caoxi Road
Shanghai, PRC 200030
Phone: +86-21-6354-6323
Fax: +86-21-6354-6325
e-mail: chinasales@power.com

**China (Shenzhen)**
17/F, Hivac Building, No. 2, Keji Nan
8th Road, Nanshan District,
Shenzhen, China, 518057
Phone: +86-755-8672-8689
Fax: +86-755-8672-8690
e-mail: chinasales@power.com

**Germany**
Lindwurmstrasse 114
80337 Munich
Germany
Phone: +49-895-527-39110
Fax: +49-895-527-39200
e-mail: eurosales@power.com

**Germany**
HellwegForum 1
59469 Ense
Germany
Tel: +49-2938-64-39990
e-mail: igbt-driver.sales@
power.com

**India**
#1, 14th Main Road
Vasanthanagar
Bangalore-560052 India
Phone: +91-80-4113-8020
Fax: +91-80-4113-8023
e-mail: indiasales@power.com

**Italy**
Via Milanese 20, 3rd. Fl.
20099 Sesto San Giovanni (MI) Italy
Phone: +39-024-550-8701
Fax: +39-028-928-6009
e-mail: eurosales@power.com

**Japan**
Kosei Dai-3 Bldg.
2-12-11, Shin-Yokohama,
Kohoku-ku
Yokohama-shi, Kanagawa
222-0033 Japan
Phone: +81-45-471-1021
Fax: +81-45-471-3717
e-mail: japansales@power.com

**Korea**
RM 602, 6FL
Korea City Air Terminal B/D, 159-6
Samsung-Dong, Kangnam-Gu,
Seoul, 135-728, Korea
Phone: +82-2-2016-6610
Fax: +82-2-2016-6630
e-mail: koreasales@power.com

**Singapore**
51 Newton Road
#19-01/05 Goldhill Plaza
Singapore, 308900
Phone: +65-6358-2160
Fax: +65-6358-2015
e-mail: singaporesales@power.com

**Taiwan**
5F, No. 318, Nei Hu Rd., Sec. 1
Nei Hu Dist.
Taipei 11493, Taiwan R.O.C.
Phone: +886-2-2659-4570
Fax: +886-2-2659-4550
e-mail: taiwansales@power.com

**UK**
Cambridge Semiconductor,
a Power Integrations company
Westbrook Centre, Block 5, 2nd Floor
Milton Road
Cambridge CB4 1YG
Phone: +44 (0) 1223-446483
e-mail: eurosales@power.com

Компания «ЭлектроПласт» предлагает заключение долгосрочных отношений при поставках импортных электронных компонентов на взаимовыгодных условиях!

Наши преимущества:

- Оперативные поставки широкого спектра электронных компонентов отечественного и импортного производства напрямую от производителей и с крупнейших мировых складов;
- Поставка более 17-ти миллионов наименований электронных компонентов;
- Поставка сложных, дефицитных, либо снятых с производства позиций;
- Оперативные сроки поставки под заказ (от 5 рабочих дней);
- Экспресс доставка в любую точку России;
- Техническая поддержка проекта, помощь в подборе аналогов, поставка прототипов;
- Система менеджмента качества сертифицирована по Международному стандарту ISO 9001;
- Лицензия ФСБ на осуществление работ с использованием сведений, составляющих государственную тайну;
- Поставка специализированных компонентов (Xilinx, Altera, Analog Devices, Intersil, Interpoint, Microsemi, Aeroflex, Peregrine, Syfer, Eurofarad, Texas Instrument, Miteq, Cobham, E2V, MA-COM, Hittite, Mini-Circuits,General Dynamics и др.);

Помимо этого, одним из направлений компании «ЭлектроПласт» является направление «Источники питания». Мы предлагаем Вам помощь Конструкторского отдела:

- Подбор оптимального решения, техническое обоснование при выборе компонента;
- Подбор аналогов;
- Консультации по применению компонента;
- Поставка образцов и прототипов;
- Техническая поддержка проекта;
- Защита от снятия компонента с производства.

**Как с нами связаться**

**Телефон:** 8 (812) 309 58 32 (многоканальный)
**Факс:** 8 (812) 320-02-42
**Электронная почта:** org@eplast1.ru
**Адрес:** 198099, г. Санкт-Петербург, ул. Калинина, дом 2, корпус 4, литера А.