MC10EL07, MC100EL07

5.0 V ECL 2-Input XOR/XNOR

The MC10EL/100EL07 is a 2-input XOR/XNOR gate. The device is functionally equivalent to the E107 device with higher performance capabilities. With propagation delays and output transition times significantly faster than the E107, the EL07 is ideally suited for those applications which require the ultimate in AC performance.

The 100 Series contains temperature compensation.

Features

- 260 ps Propagation Delay
- ESD Protection: Human Body Model; > 1.0 KV
  Machine Model; > 100 V
- PECL Mode Operating Range: V_{CC} = 4.2 V to 5.7 V with V_{EE} = 0 V
- NECL Mode Operating Range: V_{CC} = 0 V with V_{EE} = −4.2 V to −5.7 V
- Internal Input Pulldown Resistors
- Meets or Exceeds JEDEC Spec EIA/JESD78 IC Latchup Test
- Moisture Sensitivity Level 1
  For Additional Information, see Application Note AND8003/D
- Flammability Rating: UL 94 V−0 @ 0.125 in, Oxygen Index: 28 to 34
- Transistor Count = 47 devices
- Pb−Free Packages are Available

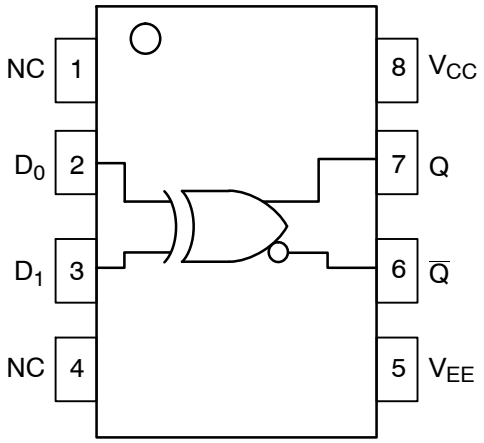

Figure 1. Logic Diagram and Pinout Assignment

ON Semiconductor®

http://onsemi.com

MARKING DIAGRAMS*

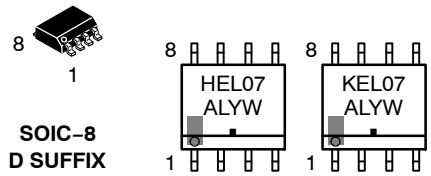

SOIC−8
D SUFFIX
CASE 751

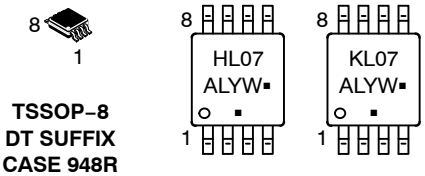

TSSOP−8
DT SUFFIX
CASE 948R

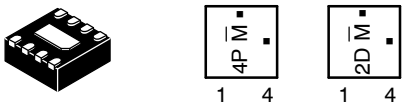

DFN8
MN SUFFIX
CASE 506AA

H = MC10	L = Wafer Lot
K = MC100	Y = Year
4P = MC10	W = Work Week
2D = MC100	M̄ = Date Code
A = Assembly Location	▪ = Pb−Free Package

(Note: Microdot may be in either location)

*For additional marking information, refer to Application Note AND8002/D.

ORDERING INFORMATION

See detailed ordering and shipping information in the package dimensions section on page 6 of this data sheet.

© Semiconductor Components Industries, LLC, 2008

Table 1. PIN DESCRIPTION

PIN	FUNCTION
D0, D1	ECL Data Inputs
Q, $\overline{Q}$	ECL Data Outputs
V_{CC}	Positive Supply
V_{EE}	Negative Supply
NC	No Connect
EP	(DFN8 only) Thermal exposed pad must be connected to a sufficient thermal conduit. Electrically connect to the most negative supply (GND) or leave unconnected, floating open.

Table 2. MAXIMUM RATINGS

Symbol	Parameter	Condition 1	Condition 2	Rating	Unit
V_{CC}	PECL Mode Power Supply	V_{EE} = 0 V		8	V
V_{EE}	NECL Mode Power Supply	V_{CC} = 0 V		−8	V
V_I	PECL Mode Input Voltage NECL Mode Input Voltage	V_{EE} = 0 V V_{CC} = 0 V	$V_I \leq V_{CC}$ $V_I \geq V_{EE}$	6 −6	V V
I_{out}	Output Current	Continuous Surge		50 100	mA mA
T_A	Operating Temperature Range			−40 to +85	°C
T_{stg}	Storage Temperature Range			−65 to +150	°C
θ_{JA}	Thermal Resistance (Junction−to−Ambient)	0 lfpm 500 lfpm	SOIC−8 SOIC−8	190 130	°C/W °C/W
θ_{JC}	Thermal Resistance (Junction−to−Case)	Standard Board	SOIC−8	41 to 44	°C/W
θ_{JA}	Thermal Resistance (Junction−to−Ambient)	0 lfpm 500 lfpm	TSSOP−8 TSSOP−8	185 140	°C/W °C/W
θ_{JC}	Thermal Resistance (Junction−to−Case)	Standard Board	TSSOP−8	41 to 44 ± 5%	°C/W
θ_{JA}	Thermal Resistance (Junction−to−Ambient)	0 lfpm 500 lfpm	DFN8 DFN8	129 84	°C/W °C/W
T_{sol}	Wave Solder Pb Pb−Free	<2 to 3 sec @ 248°C <2 to 3 sec @ 260°C		265 265	°C
θ_{JC}	Thermal Resistance (Junction−to−Case)	(Note 1)	DFN8	35 to 40	°C/W

Stresses exceeding Maximum Ratings may damage the device. Maximum Ratings are stress ratings only. Functional operation above the Recommended Operating Conditions is not implied. Extended exposure to stresses above the Recommended Operating Conditions may affect device reliability.

1. JEDEC standard multilayer board − 2S2P (2 signal, 2 power)

Table 3. 10EL SERIES PECL DC CHARACTERISTICS V_{CC}= 5.0 V; V_{EE}= 0.0 V (Note 2)

Symbol	Characteristic	−40°C			25°C			85°C			Unit
		Min	Typ	Max	Min	Typ	Max	Min	Typ	Max	
I_{EE}	Power Supply Current		14	17		14	17		14	17	mA
V_{OH}	Output HIGH Voltage (Note 5)	3920	4010	4110	4020	4105	4190	4090	4185	4280	mV
V_{OL}	Output LOW Voltage (Note 3)	3050	3200	3350	3050	3210	3370	3050	3227	3405	mV
V_{IH}	Input HIGH Voltage	3770		4110	3870		4190	3940		4280	mV
V_{IL}	Input LOW Voltage	3050		3500	3050		3520	3050		3555	mV
I_{IH}	Input HIGH Current D0 D1			 250 150			 250 150			 250 150	μA
I_{IL}	Input LOW Current	0.5			0.5			0.3			μA

NOTE: Device will meet the specifications after thermal equilibrium has been established when mounted in a test socket or printed circuit board with maintained transverse airflow greater than 500 lfpm. Electrical parameters are guaranteed only over the declared operating temperature range. Functional operation of the device exceeding these conditions is not implied. Device specification limit values are applied individually under normal operating conditions and not valid simultaneously.

2. Input and output parameters vary 1:1 with V_{CC}.
   V_{EE} can vary +0.25 V / −0.5 V for +25°C and +85°C or V_{EE} can vary +0.06 V / −0.5 V for −40°C.
3. Outputs are terminated through a 50 Ω resistor to V_{CC} − 2.0 V.

Table 4. 10EL SERIES NECL DC CHARACTERISTICS V_{CC}= 0.0 V; V_{EE}= −5.0 V (Note 4)

Symbol	Characteristic	−40°C			25°C			85°C			Unit
		Min	Typ	Max	Min	Typ	Max	Min	Typ	Max	
I_{EE}	Power Supply Current		14	17		14	17		14	17	mA
V_{OH}	Output HIGH Voltage (Note 5)	−1080	−990	−890	−980	−895	−810	−910	−815	−720	mV
V_{OL}	Output LOW Voltage (Note 5)	−1950	−1800	−1650	−1950	−1790	−1630	−1950	−1773	−1595	mV
V_{IH}	Input HIGH Voltage	−1230		−890	−1130		−810	−1060		−720	mV
V_{IL}	Input LOW Voltage	−1950		−1500	−1950		−1480	−1950		−1445	mV
I_{IH}	Input HIGH Current D0 D1			 250 150			 250 150			 250 150	μA
I_{IL}	Input LOW Current	0.5			0.5			0.3			μA

NOTE: Device will meet the specifications after thermal equilibrium has been established when mounted in a test socket or printed circuit board with maintained transverse airflow greater than 500 lfpm. Electrical parameters are guaranteed only over the declared operating temperature range. Functional operation of the device exceeding these conditions is not implied. Device specification limit values are applied individually under normal operating conditions and not valid simultaneously.

4. Input and output parameters vary 1:1 with V_{CC}.
   V_{EE} can vary +0.25 V / −0.5 V for +25°C and +85°C. or V_{EE} can vary +0.06 V / −0.5 V for −40°C.
5. Outputs are terminated through a 50 Ω resistor to V_{CC} − 2.0 V.

Table 5. 100EL SERIES PECL DC CHARACTERISTICS V_{CC}= 5.0 V; V_{EE}= 0.0 V (Note 6)

Symbol	Characteristic	−40°C			25°C			85°C			Unit
		Min	Typ	Max	Min	Typ	Max	Min	Typ	Max	
I_{EE}	Power Supply Current		14	17		14	17		16	20	mA
V_{OH}	Output HIGH Voltage (Note 7)	3915	3995	4120	3975	4045	4120	3975	4050	4120	mV
V_{OL}	Output LOW Voltage (Note 7)	3170	3305	3445	3190	3295	3380	3190	3295	3380	mV
V_{IH}	Input HIGH Voltage	3835		4120	3835		4120	3835		4120	mV
V_{IL}	Input LOW Voltage	3190		3525	3190		3525	3190		3525	mV
I_{IH}	Input HIGH Current D0 D1			 250 150			 250 150			 250 150	μA
I_{IL}	Input LOW Current	0.5			0.5			0.5			μA

NOTE: Device will meet the specifications after thermal equilibrium has been established when mounted in a test socket or printed circuit board with maintained transverse airflow greater than 500 lfpm. Electrical parameters are guaranteed only over the declared operating temperature range. Functional operation of the device exceeding these conditions is not implied. Device specification limit values are applied individually under normal operating conditions and not valid simultaneously.

6. Input and output parameters vary 1:1 with V_{CC}. V_{EE} can vary +0.8 V / −0.5 V.
7. Outputs are terminated through a 50 Ω resistor to V_{CC} − 2.0 V.

Table 6. 100EL SERIES NECL DC CHARACTERISTICS V_{CC}= 0.0 V; V_{EE}= −5.0 V (Note 8)

Symbol	Characteristic	−40°C			25°C			85°C			Unit
		Min	Typ	Max	Min	Typ	Max	Min	Typ	Max	
I_{EE}	Power Supply Current		14	17		14	17		16	20	mA
V_{OH}	Output HIGH Voltage (Note 9)	−1085	−1005	−880	−1025	−955	−880	−1025	−955	−880	mV
V_{OL}	Output LOW Voltage (Note 9)	−1830	−1695	−1555	−1810	−1705	−1620	−1810	−1705	−1620	mV
V_{IH}	Input HIGH Voltage	−1165		−880	−1165		−880	−1165		−880	mV
V_{IL}	Input LOW Voltage	−1810		−1475	−1810		−1475	−1810		−1475	mV
I_{IH}	Input HIGH Current D0 D1			 250 150			 250 150			 250 150	μA
I_{IL}	Input LOW Current	0.5			0.5			0.5			μA

NOTE: Device will meet the specifications after thermal equilibrium has been established when mounted in a test socket or printed circuit board with maintained transverse airflow greater than 500 lfpm. Electrical parameters are guaranteed only over the declared operating temperature range. Functional operation of the device exceeding these conditions is not implied. Device specification limit values are applied individually under normal operating conditions and not valid simultaneously.

8. Input and output parameters vary 1:1 with V_{CC}. V_{EE} can vary +0.8 V / −0.5 V.
9. Outputs are terminated through a 50 Ω resistor to V_{CC} − 2.0 V.

Table 7. AC CHARACTERISTICS V_{CC}= 5.0 V; V_{EE}= 0.0 V or V_{CC}= 0.0 V; V_{EE}= −5.0 V (Note 10)

Symbol	Characteristic	−40°C			25°C			85°C			Unit
		Min	Typ	Max	Min	Typ	Max	Min	Typ	Max	
f_{max}	Maximum Toggle Frequency					> 2					GHz
t_{PLH} t_{PHL}	Propagation Delay to Output	90	250	435	150	260	395	170	280	415	ps
t_{JITTER}	Random Clock Jitter		0.5			0.5			0.5		ps
t_r t_f	Output Rise/Fall Times Q (20% − 80%)	100	225	350	100	225	350	100	225	350	ps

NOTE: Device will meet the specifications after thermal equilibrium has been established when mounted in a test socket or printed circuit board with maintained transverse airflow greater than 500 lfpm. Electrical parameters are guaranteed only over the declared operating temperature range. Functional operation of the device exceeding these conditions is not implied. Device specification limit values are applied individually under normal operating conditions and not valid simultaneously.

10. 10 Series: V_{EE} can vary +0.25 V / −0.5 V for +25°C and +85°C. or V_{EE} can vary +0.06 V / −0.5 V for −40°C.
100 Series: V_{EE} can vary +0.8 V / −0.5 V.

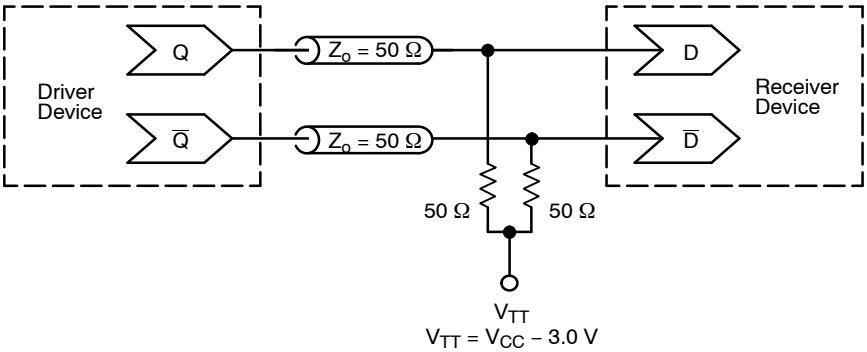

Figure 2. Typical Termination for Output Driver and Device Evaluation (See Application Note AND8020/D − Termination of ECL Logic Devices.)

ORDERING INFORMATION

Device	Package	Shipping†
MC10EL07D	SOIC−8	98 Units / Rail
MC10EL07DG	SOIC−8 (Pb−Free)	98 Units / Rail
MC10EL07DR2	SOIC−8	2500 / Tape & Reel
MC10EL07DR2G	SOIC−8 (Pb−Free)	2500 / Tape & Reel
MC10EL07DT	TSSOP−8	100 Units / Rail
MC10EL07DTG	TSSOP−8 (Pb−Free)	100 Units / Rail
MC10EL07DTR2	TSSOP−8	2500 / Tape & Reel
MC10EL07DTR2G	TSSOP−8 (Pb−Free)	2500 / Tape & Reel
MC10EL07MNR4	DFN8	1000 / Tape & Reel
MC10EL07MNR4G	DFN8 (Pb−Free)	1000 / Tape & Reel
MC100EL07D	SOIC−8	98 Units / Rail
MC100EL07DG	SOIC−8 (Pb−Free)	98 Units / Rail
MC100EL07DR2	SOIC−8	2500 / Tape & Reel
MC100EL07DR2G	SOIC−8 (Pb−Free)	2500 / Tape & Reel
MC100EL07DT	TSSOP−8	100 Units / Rail
MC100EL07DTG	TSSOP−8 (Pb−Free)	100 Units / Rail
MC100EL07DTR2	TSSOP−8	2500 / Tape & Reel
MC100EL07DTR2G	TSSOP−8 (Pb−Free)	2500 / Tape & Reel
MC100EL07MNR4	DFN8	1000 / Tape & Reel
MC100EL07MNR4G	DFN8 (Pb−Free)	1000 / Tape & Reel

†For information on tape and reel specifications, including part orientation and tape sizes, please refer to our Tape and Reel Packaging Specifications Brochure, BRD8011/D.

Resource Reference of Application Notes

AN1405/D – ECL Clock Distribution Techniques

AN1406/D – Designing with PECL (ECL at +5.0 V)

AN1503/D – ECLinPS™ I/O SPiCE Modeling Kit

AN1504/D – Metastability and the ECLinPS Family

AN1568/D – Interfacing Between LVDS and ECL

AN1672/D – The ECL Translator Guide

AND8001/D – Odd Number Counters Design

AND8002/D – Marking and Date Codes

AND8020/D – Termination of ECL Logic Devices

AND8066/D – Interfacing with ECLinPS

AND8090/D – AC Characteristics of ECL Devices

PACKAGE DIMENSIONS

SOIC−8 NB
CASE 751−07
ISSUE AH

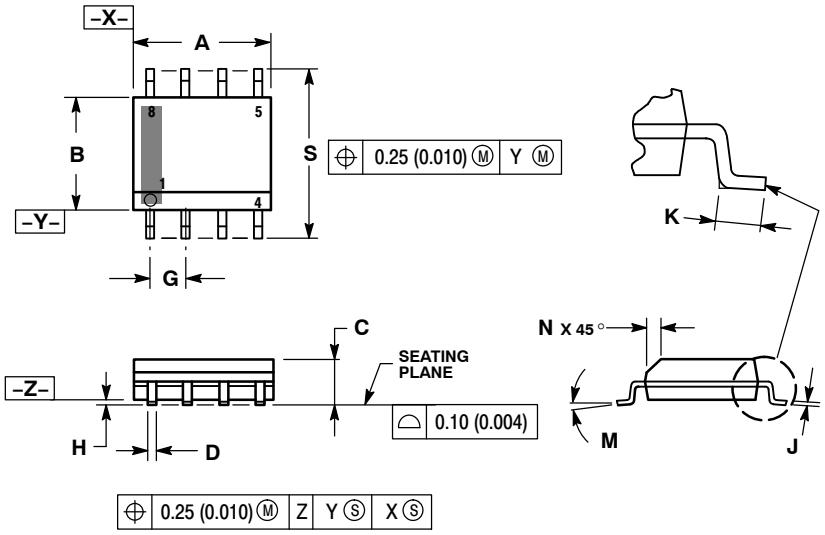

NOTES:
1. DIMENSIONING AND TOLERANCING PER ANSI Y14.5M, 1982.
2. CONTROLLING DIMENSION: MILLIMETER.
3. DIMENSION A AND B DO NOT INCLUDE MOLD PROTRUSION.
4. MAXIMUM MOLD PROTRUSION 0.15 (0.006) PER SIDE.
5. DIMENSION D DOES NOT INCLUDE DAMBAR PROTRUSION. ALLOWABLE DAMBAR PROTRUSION SHALL BE 0.127 (0.005) TOTAL IN EXCESS OF THE D DIMENSION AT MAXIMUM MATERIAL CONDITION.
6. 751−01 THRU 751−06 ARE OBSOLETE. NEW STANDARD IS 751−07.

	MILLIMETERS		INCHES	
DIM	MIN	MAX	MIN	MAX
A	4.80	5.00	0.189	0.197
B	3.80	4.00	0.150	0.157
C	1.35	1.75	0.053	0.069
D	0.33	0.51	0.013	0.020
G	1.27 BSC		0.050 BSC	
H	0.10	0.25	0.004	0.010
J	0.19	0.25	0.007	0.010
K	0.40	1.27	0.016	0.050
M	0 °	8 °	0 °	8 °
N	0.25	0.50	0.010	0.020
S	5.80	6.20	0.228	0.244

SOLDERING FOOTPRINT*

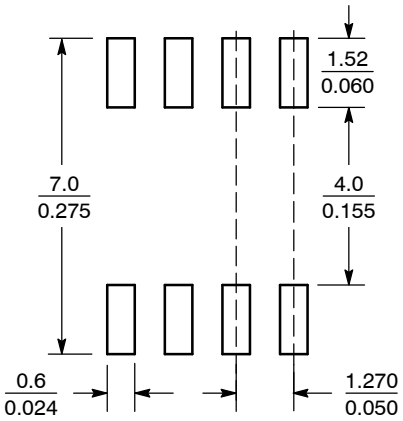

SCALE 6:1 $\left(\frac{\text{mm}}{\text{inches}}\right)$

*For additional information on our Pb−Free strategy and soldering details, please download the ON Semiconductor Soldering and Mounting Techniques Reference Manual, SOLDERRM/D.

PACKAGE DIMENSIONS

TSSOP−8
DT SUFFIX
PLASTIC TSSOP PACKAGE
CASE 948R−02
ISSUE A

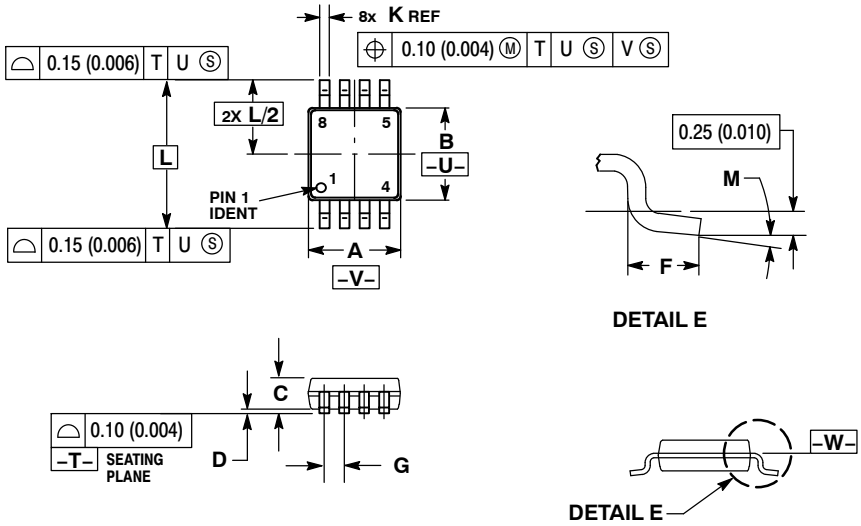

NOTES:
1. DIMENSIONING AND TOLERANCING PER ANSI Y14.5M, 1982.
2. CONTROLLING DIMENSION: MILLIMETER.
3. DIMENSION A DOES NOT INCLUDE MOLD FLASH. PROTRUSIONS OR GATE BURRS. MOLD FLASH OR GATE BURRS SHALL NOT EXCEED 0.15 (0.006) PER SIDE.
4. DIMENSION B DOES NOT INCLUDE INTERLEAD FLASH OR PROTRUSION. INTERLEAD FLASH OR PROTRUSION SHALL NOT EXCEED 0.25 (0.010) PER SIDE.
5. TERMINAL NUMBERS ARE SHOWN FOR REFERENCE ONLY.
6. DIMENSION A AND B ARE TO BE DETERMINED AT DATUM PLANE −W−.

	MILLIMETERS		INCHES	
DIM	MIN	MAX	MIN	MAX
A	2.90	3.10	0.114	0.122
B	2.90	3.10	0.114	0.122
C	0.80	1.10	0.031	0.043
D	0.05	0.15	0.002	0.006
F	0.40	0.70	0.016	0.028
G	0.65 BSC		0.026 BSC	
K	0.25	0.40	0.010	0.016
L	4.90 BSC		0.193 BSC	
M	0°	6°	0°	6°

PACKAGE DIMENSIONS

DFN8
CASE 506AA−01
ISSUE D

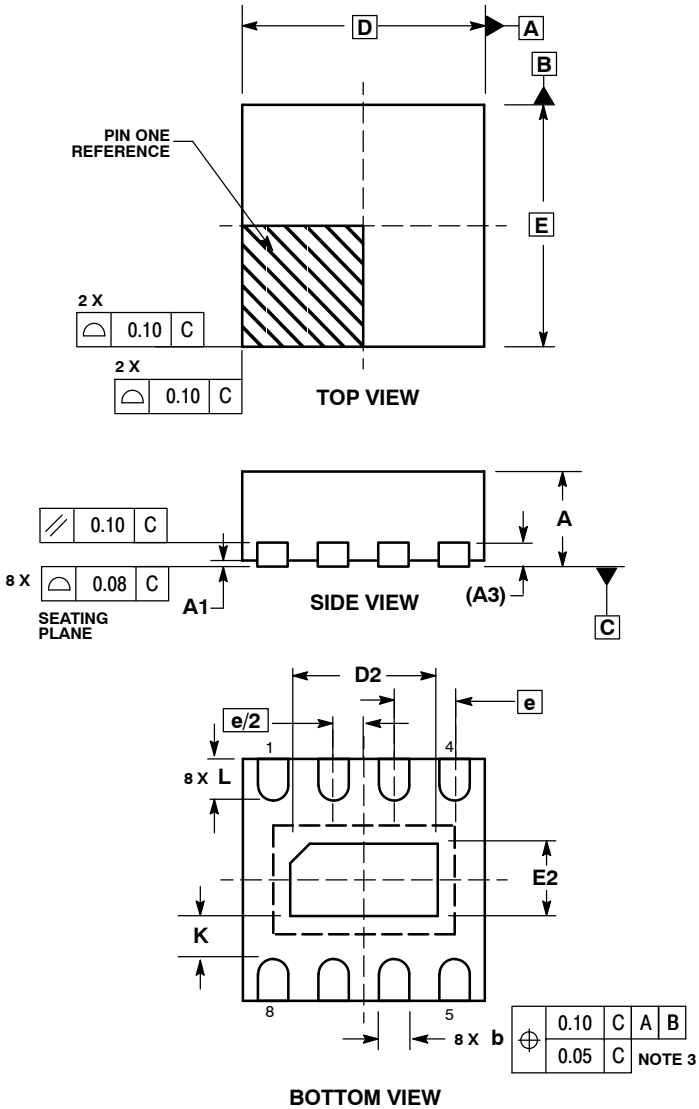

NOTES:
1. DIMENSIONING AND TOLERANCING PER ASME Y14.5M, 1994 .
2. CONTROLLING DIMENSION: MILLIMETERS.
3. DIMENSION b APPLIES TO PLATED TERMINAL AND IS MEASURED BETWEEN 0.25 AND 0.30 MM FROM TERMINAL.
4. COPLANARITY APPLIES TO THE EXPOSED PAD AS WELL AS THE TERMINALS.

	MILLIMETERS	
DIM	MIN	MAX
A	0.80	1.00
A1	0.00	0.05
A3	0.20 REF	
b	0.20	0.30
D	2.00 BSC	
D2	1.10	1.30
E	2.00 BSC	
E2	0.70	0.90
e	0.50 BSC	
K	0.20	−−−
L	0.25	0.35

ECLinPS is a trademark of Semiconductor Components INdustries, LLC (SCILLC).

ON Semiconductor and ON are registered trademarks of Semiconductor Components Industries, LLC (SCILLC). SCILLC reserves the right to make changes without further notice to any products herein. SCILLC makes no warranty, representation or guarantee regarding the suitability of its products for any particular purpose, nor does SCILLC assume any liability arising out of the application or use of any product or circuit, and specifically disclaims any and all liability, including without limitation special, consequential or incidental damages. “Typical” parameters which may be provided in SCILLC data sheets and/or specifications can and do vary in different applications and actual performance may vary over time. All operating parameters, including “Typicals” must be validated for each customer application by customer’s technical experts. SCILLC does not convey any license under its patent rights nor the rights of others. SCILLC products are not designed, intended, or authorized for use as components in systems intended for surgical implant into the body, or other applications intended to support or sustain life, or for any other application in which the failure of the SCILLC product could create a situation where personal injury or death may occur. Should Buyer purchase or use SCILLC products for any such unintended or unauthorized application, Buyer shall indemnify and hold SCILLC and its officers, employees, subsidiaries, affiliates, and distributors harmless against all claims, costs, damages, and expenses, and reasonable attorney fees arising out of, directly or indirectly, any claim of personal injury or death associated with such unintended or unauthorized use, even if such claim alleges that SCILLC was negligent regarding the design or manufacture of the part. SCILLC is an Equal Opportunity/Affirmative Action Employer. This literature is subject to all applicable copyright laws and is not for resale in any manner.

PUBLICATION ORDERING INFORMATION

LITERATURE FULFILLMENT:
Literature Distribution Center for ON Semiconductor
P.O. Box 5163, Denver, Colorado 80217 USA
Phone: 303−675−2175 or 800−344−3860 Toll Free USA/Canada
Fax: 303−675−2176 or 800−344−3867 Toll Free USA/Canada
Email: orderlit@onsemi.com

N. American Technical Support: 800−282−9855 Toll Free USA/Canada
Europe, Middle East and Africa Technical Support:
Phone: 421 33 790 2910
Japan Customer Focus Center
Phone: 81−3−5773−3850

ON Semiconductor Website: **www.onsemi.com**

Order Literature: http://www.onsemi.com/orderlit

For additional information, please contact your local Sales Representative

Компания «ЭлектроПласт» предлагает заключение долгосрочных отношений при поставках импортных электронных компонентов на взаимовыгодных условиях!

Наши преимущества:

- Оперативные поставки широкого спектра электронных компонентов отечественного и импортного производства напрямую от производителей и с крупнейших мировых складов;
- Поставка более 17-ти миллионов наименований электронных компонентов;
- Поставка сложных, дефицитных, либо снятых с производства позиций;
- Оперативные сроки поставки под заказ (от 5 рабочих дней);
- Экспресс доставка в любую точку России;
- Техническая поддержка проекта, помощь в подборе аналогов, поставка прототипов;
- Система менеджмента качества сертифицирована по Международному стандарту ISO 9001;
- Лицензия ФСБ на осуществление работ с использованием сведений, составляющих государственную тайну;
- Поставка специализированных компонентов (Xilinx, Altera, Analog Devices, Intersil, Interpoint, Microsemi, Aeroflex, Peregrine, Syfer, Eurofarad, Texas Instrument, Miteq, Cobham, E2V, MA-COM, Hittite, Mini-Circuits,General Dynamics и др.);

Помимо этого, одним из направлений компании «ЭлектроПласт» является направление «Источники питания». Мы предлагаем Вам помощь Конструкторского отдела:

- Подбор оптимального решения, техническое обоснование при выборе компонента;
- Подбор аналогов;
- Консультации по применению компонента;
- Поставка образцов и прототипов;
- Техническая поддержка проекта;
- Защита от снятия компонента с производства.

Как с нами связаться

Телефон: 8 (812) 309 58 32 (многоканальный)
Факс: 8 (812) 320-02-42
Электронная почта: org@eplast1.ru
Адрес: 198099, г. Санкт-Петербург, ул. Калинина, дом 2, корпус 4, литера А.