74HC153; 74HCT153

Dual 4-input multiplexer

Rev. 8 — 13 August 2019 Product data sheet

1. General description

The 74HC153; 74HCT153 is a dual 4-input multiplexer. The device features independent enable inputs (n$\overline{E}$) and common data select inputs (S0 and S1). For each multiplexer, the select inputs select one of the four binary inputs and routes it to the multiplexer output (nY). A HIGH on $\overline{E}$ forces the corresponding multiplexer outputs LOW. Inputs include clamp diodes. This enables the use of current limiting resistors to interface inputs to voltages in excess of V_{CC}.

2. Features and benefits

- Input levels:
  - For 74HC153: CMOS level
  - For 74HCT153: TTL level
- Non-inverting outputs
- Separate enable input for each output
- Common select inputs
- Complies with JEDEC standard no. 7A
- Permits multiplexing from n lines to 1 line
- Enable line provided for cascading (n lines to 1 line)
- ESD protection:
  - HBM JESD22-A114F exceeds 2000 V
  - MM JESD22-A115-A exceeds 200 V
- Multiple package options
- Specified from -40 °C to +85 °C and -40 °C to +125 °C.

3. Ordering information

Table 1. Ordering information

Type number	Package			
	Temperature range	Name	Description	Version
74HC153D	-40 °C to +125 °C	SO16	plastic small outline package; 16 leads; body width 3.9 mm	SOT109-1
74HCT153D				
74HC153DB	-40 °C to +125 °C	SSOP16	plastic shrink small outline package; 16 leads; body width 5.3 mm	SOT338-1
74HCT153DB				
74HC153PW	-40 °C to +125 °C	TSSOP16	plastic thin shrink small outline package; 16 leads; body width 4.4 mm	SOT403-1
74HCT153PW				

nexperia

4. Functional diagram

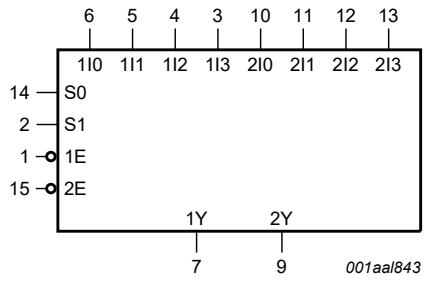

Fig. 1. Logic symbol

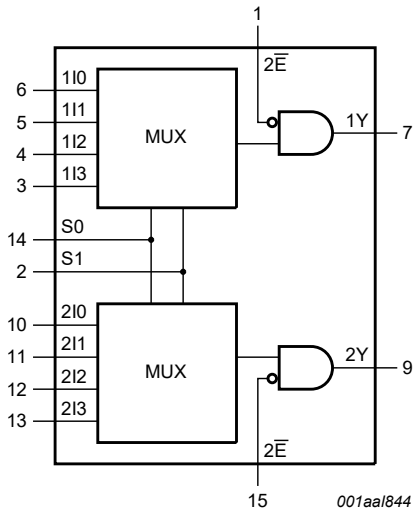

Fig. 2. Functional diagram

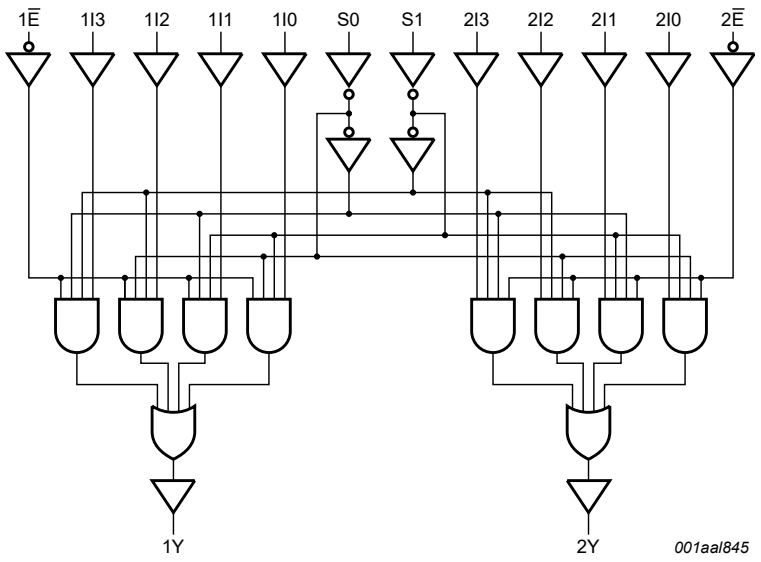

Fig. 3. Logic diagram

All information provided in this document is subject to legal disclaimers.

© Nexperia B.V. 2019. All rights reserved

5. Pinning information

5.1. Pinning

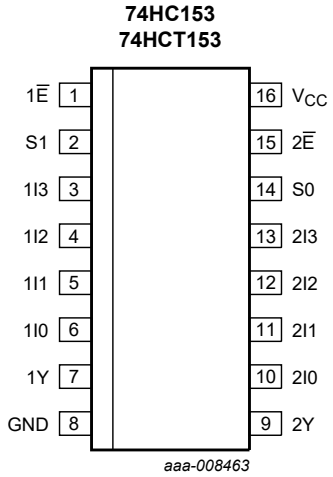

Fig. 4. Pin configuration SOT109-1 (SO16)

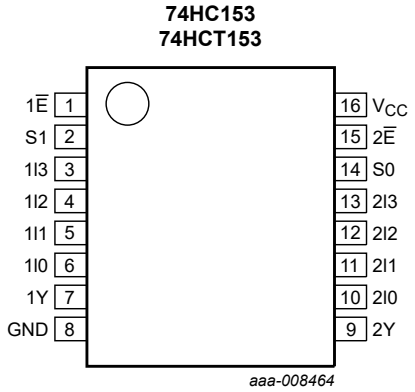

Fig. 5. Pin configuration SOT338-1 (SSOP16) and SOT403-1 (TSSOP16)

5.2. Pin description

Table 2. Pin description

Symbol	Pin	Description
$1\overline{E}$, $2\overline{E}$	1, 15	output enable inputs (active LOW)
S0, S1	14, 2	data select inputs
1I0, 1I1, 1I2, 1I3	6, 5, 4, 3	data inputs source 1
1Y	7	multiplexer output source 1
GND	8	ground (0 V)
2Y	9	multiplexer output source 2
2I0, 2I1, 2I2, 2I3	10, 11, 12, 13	data inputs source 2
V_{CC}	16	supply voltage

All information provided in this document is subject to legal disclaimers.

© Nexperia B.V. 2019. All rights reserved

6. Functional description

Table 3. Function table

H = HIGH voltage level; L = LOW voltage level; X = don't care.

select Inputs		data inputs				output enable	output
S0	**S1**	**nI0**	**nI1**	**nI2**	**nI3**	**n$\overline{E}$**	**nY**
X	X	X	X	X	X	H	L
L	L	L	X	X	X	L	L
L	L	H	X	X	X	L	H
H	L	X	L	X	X	L	L
H	L	X	H	X	X	L	H
L	H	X	X	L	X	L	L
L	H	X	X	H	X	L	H
H	H	X	X	X	L	L	L
H	H	X	X	X	H	L	H

7. Limiting values

Table 4. Limiting values

In accordance with the Absolute Maximum Rating System (IEC 60134). Voltages are referenced to GND (ground = 0 V).

Symbol	Parameter	Conditions		Min	Max	Unit
V_{CC}	supply voltage			-0.5	+7	V
I_{IK}	input clamping current	V_I < -0.5 V or V_I > V_{CC} + 0.5 V	[1]	-	±20	mA
I_{OK}	output clamping current	V_O < -0.5 V or V_O > V_{CC} + 0.5 V	[1]	-	±20	mA
I_O	output current	-0.5 V < V_O < V_{CC} + 0.5 V		-	±25	mA
I_{CC}	supply current			-	50	mA
I_{GND}	ground current			-50	-	mA
T_{stg}	storage temperature			-65	+150	°C
P_{tot}	total power dissipation		[2]	-	500	mW

[1] The input and output voltage ratings may be exceeded if the input and output current ratings are observed.

[2] For SOT109-1 (SO16) packages: P_{tot} derates linearly with 12.4 mW/K above 110 °C.
For SOT338-1 (SSOP16) packages: P_{tot} derates linearly with 8.5 mW/K above 91 °C.
For SOT403-1 (TSSOP16) packages: P_{tot} derates linearly with 8.5 mW/K above 91 °C.

All information provided in this document is subject to legal disclaimers.

© Nexperia B.V. 2019. All rights reserved

8. Recommended operating conditions

Table 5. Recommended operating conditions

Voltages are referenced to GND (ground = 0 V)

Symbol	Parameter	Conditions	74HC153			74HCT153			Unit
			Min	Typ	Max	Min	Typ	Max	
V_{CC}	supply voltage		2.0	5.0	6.0	4.5	5.0	5.5	V
V_I	input voltage		0	-	V_{CC}	0	-	V_{CC}	V
V_O	output voltage		0	-	V_{CC}	0	-	V_{CC}	V
T_{amb}	ambient temperature		-40	+25	+125	-40	+25	+125	°C
Δt/ΔV	input transition rise and fall rate	V_{CC} = 2.0 V	-	-	625	-	-	-	ns/V
		V_{CC} = 4.5 V	-	1.67	139	-	1.67	139	ns/V
		V_{CC} = 6.0 V	-	-	83	-	-	-	ns/V

9. Static characteristics

Table 6. Static characteristics

At recommended operating conditions; voltages are referenced to GND (ground = 0 V).

Symbol	Parameter	Conditions	25 °C			-40 °C to +85 °C		-40 °C to +125 °C		Unit
			Min	Typ	Max	Min	Max	Min	Max	
74HC153										
V_{IH}	HIGH-level input voltage	V_{CC} = 2.0 V	1.5	1.2	-	1.5	-	1.5	-	V
		V_{CC} = 4.5 V	3.15	2.4	-	3.15	-	3.15	-	V
		V_{CC} = 6.0 V	4.2	3.2	-	4.2	-	4.2	-	V
V_{IL}	LOW-level input voltage	V_{CC} = 2.0 V	-	0.8	0.5	-	0.5	-	0.5	V
		V_{CC} = 4.5 V	-	2.1	1.35	-	1.35	-	1.35	V
		V_{CC} = 6.0 V	-	2.8	1.8	-	1.8	-	1.8	V
V_{OH}	HIGH-level output voltage	$V_I = V_{IH}$ or V_{IL}								
		I_O = -20 μA; V_{CC} = 2.0 V	1.9	2.0	-	1.9	-	1.9	-	V
		I_O = -20 μA; V_{CC} = 4.5 V	4.4	4.5	-	4.4	-	4.4	-	V
		I_O = -20 μA; V_{CC} = 6.0 V	5.9	6.0	-	5.9	-	5.9	-	V
		I_O = -4.0 mA; V_{CC} = 4.5 V	3.98	4.32	-	3.84	-	3.7	-	V
		I_O = -5.2 mA; V_{CC} = 6.0 V	5.48	5.81	-	5.34	-	5.2	-	V
V_{OL}	LOW-level output voltage	$V_I = V_{IH}$ or V_{IL}								
		I_O = 20 μA; V_{CC} = 2.0 V	-	0	0.1	-	0.1	-	0.1	V
		I_O = 20 μA; V_{CC} = 4.5 V	-	0	0.1	-	0.1	-	0.1	V
		I_O = 20 μA; V_{CC} = 6.0 V	-	0	0.1	-	0.1	-	0.1	V
		I_O = 4.0 mA; V_{CC} = 4.5 V	-	0.15	0.26	-	0.33	-	0.4	V
		I_O = 5.2 mA; V_{CC} = 6.0 V	-	0.16	0.26	-	0.33	-	0.4	V
I_I	input leakage current	$V_I = V_{CC}$ or GND; V_{CC} = 6.0 V	-	-	±0.1	-	±1	-	±1	μA
I_{CC}	supply current	$V_I = V_{CC}$ or GND; I_O = 0 A; V_{CC} = 6.0 V	-	-	8.0	-	80	-	160	μA
C_I	input capacitance		-	3.5	-	-	-	-	-	pF

All information provided in this document is subject to legal disclaimers.

© Nexperia B.V. 2019. All rights reserved

Symbol	Parameter	Conditions	25 °C			-40 °C to +85 °C		-40 °C to +125 °C		Unit
			Min	Typ	Max	Min	Max	Min	Max	
74HCT153										
V_{IH}	HIGH-level input voltage	V_{CC} = 4.5 V to 5.5 V	2.0	1.6	-	2.0	-	2.0	-	V
V_{IL}	LOW-level input voltage	V_{CC} = 4.5 V to 5.5 V	-	1.2	0.8	-	0.8	-	0.8	V
V_{OH}	HIGH-level output voltage	$V_I = V_{IH}$ or V_{IL}; V_{CC} = 4.5 V								
		I_O = -20 μA	4.4	4.5	-	4.4	-	4.4	-	V
		I_O = -4.0 mA	3.98	4.32	-	3.84	-	3.7	-	V
V_{OL}	LOW-level output voltage	$V_I = V_{IH}$ or V_{IL}; V_{CC} = 4.5 V								
		I_O = 20 μA; V_{CC} = 4.5 V	-	0	0.1	-	0.1	-	0.1	V
		I_O = 5.2 mA; V_{CC} = 6.0 V	-	0.15	0.26	-	0.33	-	0.4	V
I_I	input leakage current	$V_I = V_{CC}$ or GND; V_{CC} = 5.5 V	-	-	±0.1	-	±1	-	±1	μA
I_{CC}	supply current	$V_I = V_{CC}$ or GND; I_O = 0 A; V_{CC} = 5.5 V	-	-	8	-	80	-	160	μA
ΔI_{CC}	additional supply current	per input pin; $V_I = V_{CC}$ - 2.1 V; I_O = 0 A; other inputs at V_{CC} or GND; V_{CC} = 4.5 V to 5.5 V								
		1In, 2In	-	45	162	-	203	-	221	μA
		$n\overline{E}$	-	60	216	-	270	-	294	μA
		Sn	-	135	486	-	608	-	662	μA
C_I	input capacitance		-	3.5	-	-	-	-	-	pF

All information provided in this document is subject to legal disclaimers.

© Nexperia B.V. 2019. All rights reserved

10. Dynamic characteristics

Table 7. Dynamic characteristics

GND = 0 V; $t_r = t_f = 6$ ns; $C_L = 50$ pF; for test circuit, see Fig. 8; unless otherwise specified

Symbol	Parameter	Conditions		25 °C			-40 °C to +85 °C		-40 °C to +125 °C		Unit
				Min	Typ	Max	Min	Max	Min	Max	
74HC153											
t_{pd}	propagation delay	1In to nY, 2In to nY; see Fig. 6	[1]								
		V_{CC} = 2.0 V		-	47	145	-	180	-	220	ns
		V_{CC} = 4.5 V		-	17	29	-	36	-	44	ns
		V_{CC} = 5.0 V; C_L = 15 pF		-	14	-	-	-	-	-	ns
		V_{CC} = 6.0 V		-	14	25	-	31	-	38	ns
		Sn to nY; see Fig. 7									
		V_{CC} = 2.0 V		-	50	150	-	190	-	225	ns
		V_{CC} = 4.5 V		-	18	30	-	38	-	45	ns
		V_{CC} = 5.0 V; C_L = 15 pF		-	15	-	-	-	-	-	ns
		V_{CC} = 6.0 V		-	14	26	-	33	-	38	ns
		$n\overline{E}$ to nY; see Fig. 7									
		V_{CC} = 2.0 V		-	33	100	-	125	-	150	ns
		V_{CC} = 4.5 V		-	12	20	-	25	-	30	ns
		V_{CC} = 5.0 V; C_L = 15 pF		-	10	-	-	-	-	-	ns
		V_{CC} = 6.0 V		-	10	17	-	21	-	26	ns
t_t	transition time	see Fig. 6	[2]								
		V_{CC} = 2.0 V		-	19	75	-	95	-	110	ns
		V_{CC} = 4.5 V		-	7	15	-	19	-	22	ns
		V_{CC} = 6.0 V		-	6	13	-	16	-	19	ns
C_{PD}	power dissipation capacitance	per package; V_I = GND to V_{CC}	[3]	-	30	-	-	-	-	-	pF

All information provided in this document is subject to legal disclaimers.

© Nexperia B.V. 2019. All rights reserved

Symbol	Parameter	Conditions		25 °C			-40 °C to +85 °C		-40 °C to +125 °C		Unit
				Min	Typ	Max	Min	Max	Min	Max	
74HCT153											
t_{PHL}	HIGH to LOW propagation delay	1In to nY, 2In to nY; see Fig. 6	[1]								
		V_{CC} = 4.5 V		-	19	34	-	43	-	51	ns
		V_{CC} = 5.0 V; C_L = 15 pF		-	16	-	-	-	-	-	ns
t_{PLH}	LOW to HIGH propagation delay	1In to nY, 2In to nY; see Fig. 6	[1]								
		V_{CC} = 4.5 V		-	13	24	-	30	-	36	ns
		V_{CC} = 5.0 V; C_L = 15 pF		-	16	-	-	-	-	-	ns
t_{pd}	propagation delay	Sn to nY; see Fig. 7	[1]								
		V_{CC} = 4.5 V		-	20	34	-	43	-	51	ns
		V_{CC} = 5.0 V; C_L = 15 pF		-	17	-	-	-	-	-	ns
		$n\overline{E}$ to nY; see Fig. 7	[1]								
		V_{CC} = 4.5 V		-	14	27	-	34	-	41	ns
		V_{CC} = 5.0 V; C_L = 15 pF		-	11	-	-	-	-	-	ns
t_t	transition time	see Fig. 6	[2]								
		V_{CC} = 4.5 V		-	7	15	-	19	-	22	ns
C_{PD}	power dissipation capacitance	per package; V_I = GND to V_{CC} - 1.5 V	[3]	-	30	-	-	-	-	-	pF

[1] t_{pd} is the same as t_{PHL} and t_{PLH}.
[2] t_t is the same as t_{THL} and t_{TLH}.
[3] C_{PD} is used to determine the dynamic power dissipation (P_D in μW):
$P_D = C_{PD} \times V_{CC}^2 \times f_i \times N + \sum(C_L \times V_{CC}^2 \times f_o)$ where:
f_i = input frequency in MHz;
f_o = output frequency in MHz;
C_L = output load capacitance in pF;
V_{CC} = supply voltage in V;
N = number of inputs switching;
$\sum(C_L \times V_{CC}^2 \times f_o)$ = sum of outputs.

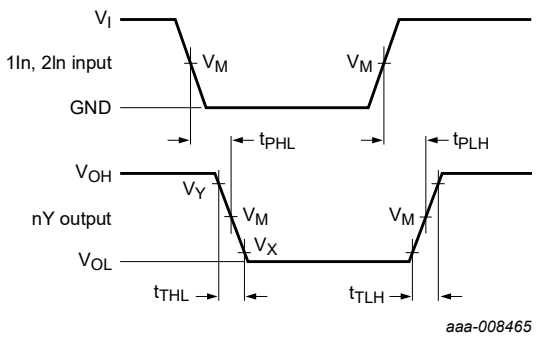

Measurement points are given in Table 8.

V_{OL} and V_{OH} are typical voltage output levels that occur with the output load.

Fig. 6. Waveforms showing the input (1In, 2In) to output (1Y, 2Y) propagation delays and output transition times

All information provided in this document is subject to legal disclaimers.

© Nexperia B.V. 2019. All rights reserved

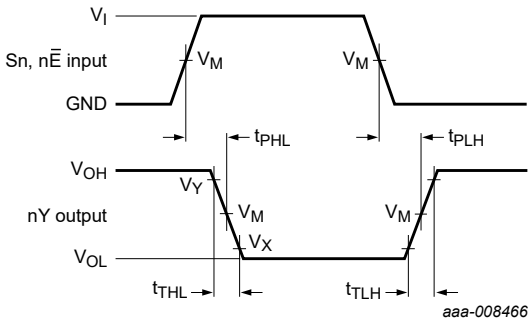

Measurement points are given in Table 8.

V_{OL} and V_{OH} are typical voltage output levels that occur with the output load.

Fig. 7. Waveforms showing the input (Sn, nĒ) to output (nY) propagation delays

Table 8. Measurement points

Type	Input	Output		
	V_M	V_M	V_X	V_Y
74HC153	$0.5V_{CC}$	$0.5V_{CC}$	$0.1V_{CC}$	$0.9V_{CC}$
74HCT153	1.3 V	1.3 V	$0.1V_{CC}$	$0.9V_{CC}$

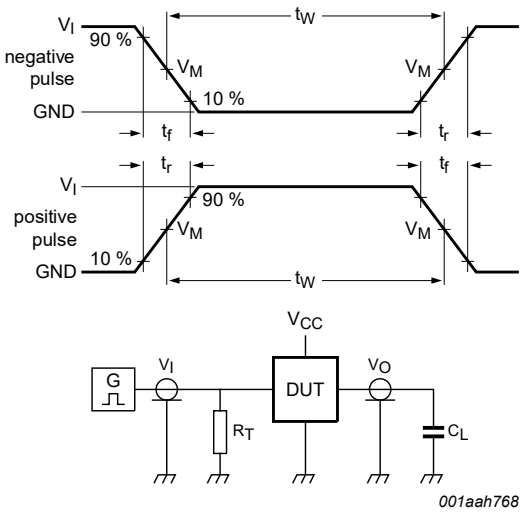

Test data is given in Table 9.

Definitions test circuit:

R_T = termination resistance should be equal to output impedance Z_o of the pulse generator.

C_L = load capacitance including jig and probe capacitance.

Fig. 8. Test circuit for measuring switching times

Table 9. Test data

Type	Input		Load	Test
	V_I	t_r, t_f	C_L	
74HC153	V_{CC}	6.0 ns	15 pF, 50 pF	t_{PLH}, t_{PHL}
74HCT153	3.0 V	6.0 ns	15 pF, 50 pF	t_{PLH}, t_{PHL}

All information provided in this document is subject to legal disclaimers.

© Nexperia B.V. 2019. All rights reserved

11. Package outline

SO16: plastic small outline package; 16 leads; body width 3.9 mm **SOT109-1**

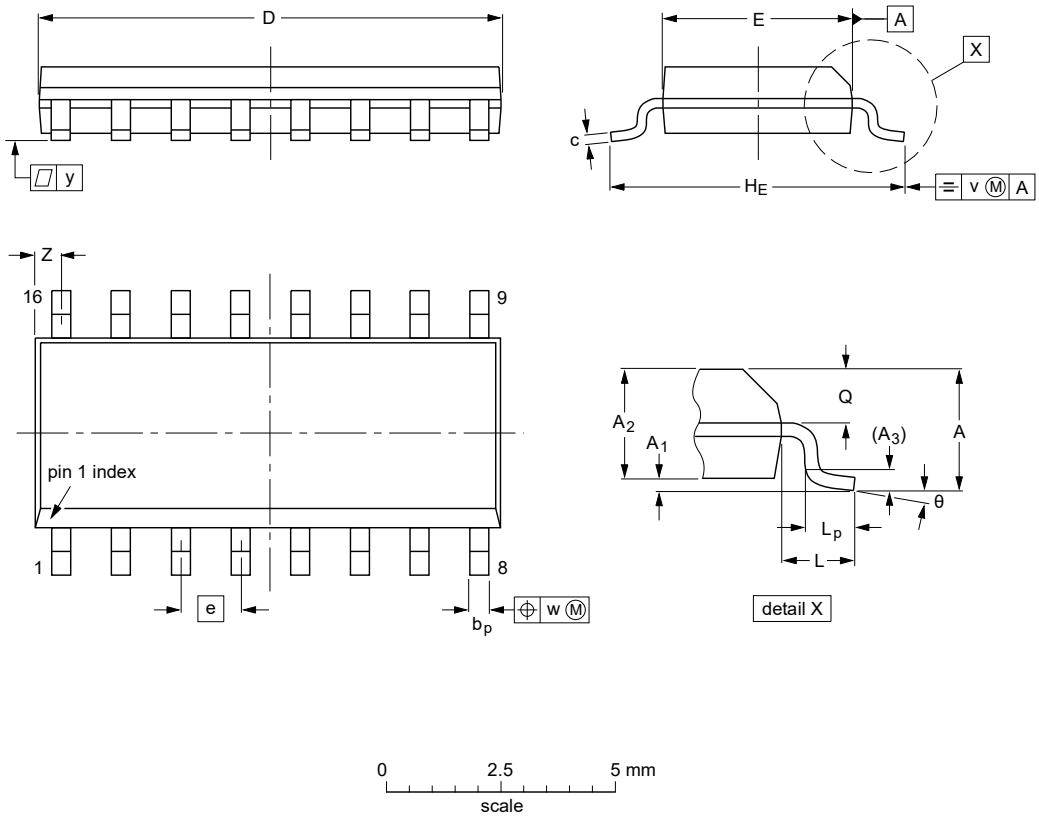

DIMENSIONS (inch dimensions are derived from the original mm dimensions)

UNIT	A max.	A_1	A_2	A_3	b_p	c	D(1)	E(1)	e	H_E	L	L_p	Q	v	w	y	Z(1)	θ
mm	1.75	0.25 0.10	1.45 1.25	0.25	0.49 0.36	0.25 0.19	10.0 9.8	4.0 3.8	1.27	6.2 5.8	1.05	1.0 0.4	0.7 0.6	0.25	0.25	0.1	0.7 0.3	8° 0°
inches	0.069	0.010 0.004	0.057 0.049	0.01	0.019 0.014	0.0100 0.0075	0.39 0.38	0.16 0.15	0.05	0.244 0.228	0.041	0.039 0.016	0.028 0.020	0.01	0.01	0.004	0.028 0.012	

Note

1. Plastic or metal protrusions of 0.15 mm (0.006 inch) maximum per side are not included.

OUTLINE VERSION	REFERENCES				EUROPEAN PROJECTION	ISSUE DATE
	IEC	JEDEC	JEITA			
SOT109-1	076E07	MS-012				~~99-12-27~~ 03-02-19

Fig. 9. Package outline SOT109-1 (SO16)

All information provided in this document is subject to legal disclaimers.

© Nexperia B.V. 2019. All rights reserved

SSOP16: plastic shrink small outline package; 16 leads; body width 5.3 mm **SOT338-1**

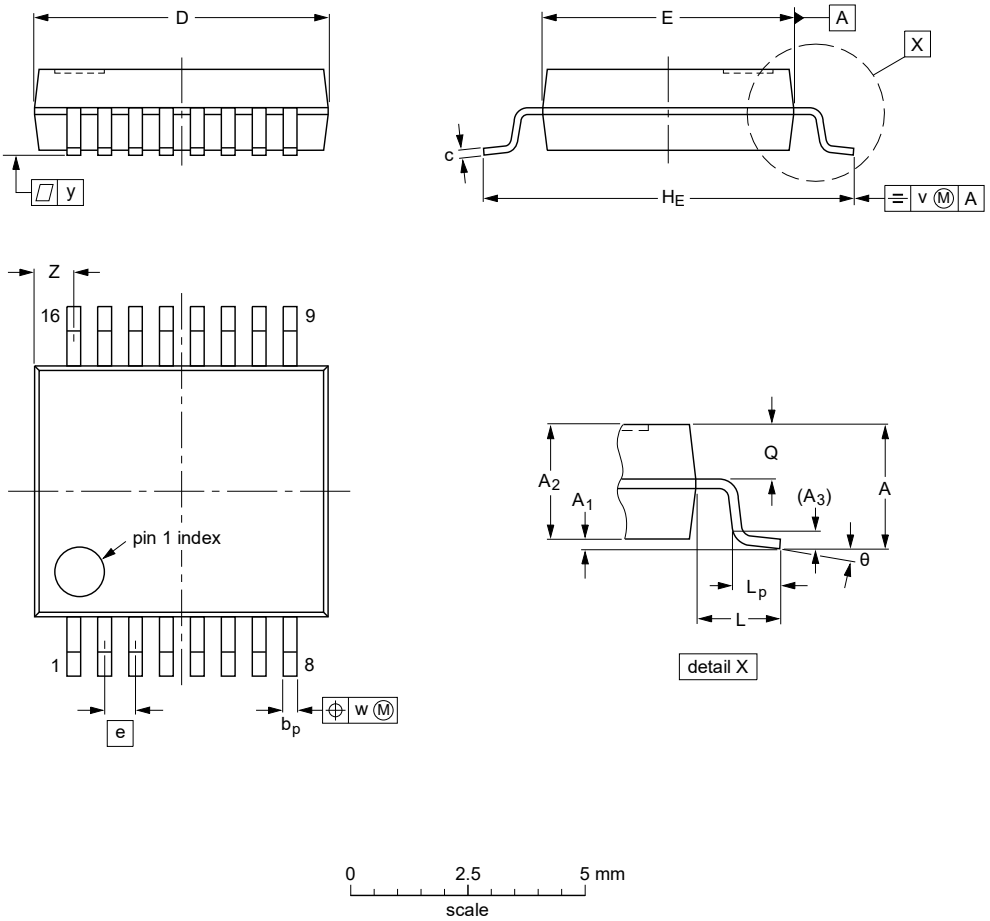

DIMENSIONS (mm are the original dimensions)

UNIT	A max.	A_1	A_2	A_3	b_p	c	D (1)	E (1)	e	H_E	L	L_p	Q	v	w	y	Z (1)	θ
mm	2	0.21 0.05	1.80 1.65	0.25	0.38 0.25	0.20 0.09	6.4 6.0	5.4 5.2	0.65	7.9 7.6	1.25	1.03 0.63	0.9 0.7	0.2	0.13	0.1	1.00 0.55	8° 0°

Note

1. Plastic or metal protrusions of 0.25 mm maximum per side are not included.

OUTLINE VERSION	REFERENCES				EUROPEAN PROJECTION	ISSUE DATE
	IEC	JEDEC	JEITA			
SOT338-1		MO-150				~~99-12-27~~ 03-02-19

Fig. 10. Package outline SOT338-1 (SSOP16)

All information provided in this document is subject to legal disclaimers.

© Nexperia B.V. 2019. All rights reserved

TSSOP16: plastic thin shrink small outline package; 16 leads; body width 4.4 mm **SOT403-1**

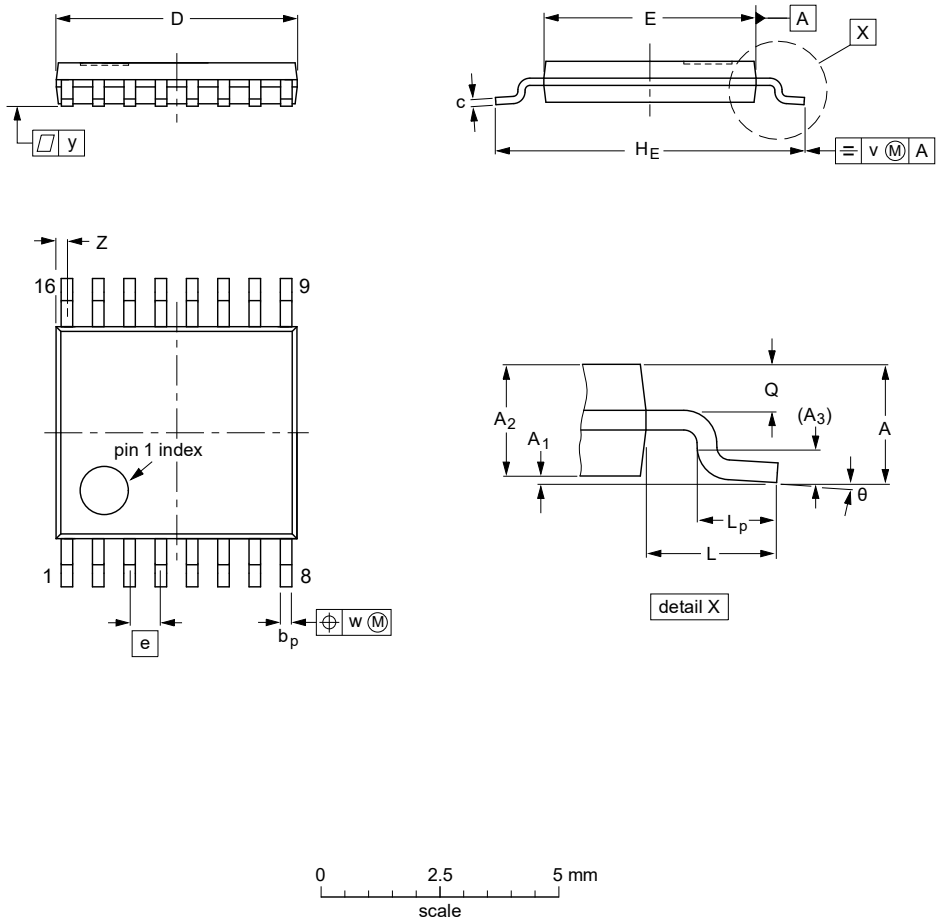

DIMENSIONS (mm are the original dimensions)

UNIT	A max.	A_1	A_2	A_3	b_p	c	D (1)	E (2)	e	H_E	L	L_p	Q	v	w	y	Z (1)	θ
mm	1.1	0.15 0.05	0.95 0.80	0.25	0.30 0.19	0.2 0.1	5.1 4.9	4.5 4.3	0.65	6.6 6.2	1	0.75 0.50	0.4 0.3	0.2	0.13	0.1	0.40 0.06	8° 0°

Notes

1. Plastic or metal protrusions of 0.15 mm maximum per side are not included.
2. Plastic interlead protrusions of 0.25 mm maximum per side are not included.

OUTLINE VERSION	REFERENCES				EUROPEAN PROJECTION	ISSUE DATE
	IEC	JEDEC	JEITA			
SOT403-1		MO-153				~~99-12-27~~ 03-02-18

Fig. 11. Package outline SOT403-1 (TSSOP16)

All information provided in this document is subject to legal disclaimers.

© Nexperia B.V. 2019. All rights reserved

12. Abbreviations

Table 10. Abbreviations

Acronym	Description
CMOS	Complementary Metal-Oxide Semiconductor
DUT	Device Under Test
ESD	ElectroStatic Discharge
HBM	Human Body Model
MM	Machine Model
TTL	Transistor-Transistor Logic

13. Revision history

Table 11. Revision history

Document ID	Release date	Data sheet status	Change notice	Supersedes
74HC_HCT153 v.8	20190813	Product data sheet	-	74HC_HCT153 v.7
Modifications:	• Type numbers 74HC153DB and 74HCT153DB (SOT338-1/SSOP16) added. • Table 4: Derating values for P_{tot} total power dissipation updated.			
74HC_HCT153 v.7	20181010	Product data sheet	-	74HC_HCT153 v.6
Modifications:	• The format of this data sheet has been redesigned to comply with the identity guidelines of Nexperia. • Legal texts have been adapted to the new company name where appropriate. • Type numbers 74HC153DB and 74HCT153DB (SOT338-1/SSOP16) removed.			
74HC_HCT153 v.6	20160511	Product data sheet	-	74HC_HCT153 v.5
Modifications:	• Type numbers 74HC153N and 74HCT153N (SOT38-4) removed.			
74HC_HCT153 v.5	20140123	Product data sheet	-	74HC_HCT153 v.4
Modifications:	• Table 1 and Section 11: all references to 14 pin packages removed.			
74HC_HCT153 v.4	20131128	Product data sheet	-	74HC_HCT153 v.3
74HC_HCT153 v.3	20130722	Product data sheet	-	74HC_HCT153_CNV v.2
74HC_HCT153_CNV v.2	19970827	Product specification	-	-

All information provided in this document is subject to legal disclaimers.

© Nexperia B.V. 2019. All rights reserved

14. Legal information

Data sheet status

Document status [1][2]	Product status [3]	Definition
Objective [short] data sheet	Development	This document contains data from the objective specification for product development.
Preliminary [short] data sheet	Qualification	This document contains data from the preliminary specification.
Product [short] data sheet	Production	This document contains the product specification.

[1] Please consult the most recently issued document before initiating or completing a design.
[2] The term 'short data sheet' is explained in section "Definitions".
[3] The product status of device(s) described in this document may have changed since this document was published and may differ in case of multiple devices. The latest product status information is available on the internet at https://www.nexperia.com.

Definitions

Draft — The document is a draft version only. The content is still under internal review and subject to formal approval, which may result in modifications or additions. Nexperia does not give any representations or warranties as to the accuracy or completeness of information included herein and shall have no liability for the consequences of use of such information.

Short data sheet — A short data sheet is an extract from a full data sheet with the same product type number(s) and title. A short data sheet is intended for quick reference only and should not be relied upon to contain detailed and full information. For detailed and full information see the relevant full data sheet, which is available on request via the local Nexperia sales office. In case of any inconsistency or conflict with the short data sheet, the full data sheet shall prevail.

Product specification — The information and data provided in a Product data sheet shall define the specification of the product as agreed between Nexperia and its customer, unless Nexperia and customer have explicitly agreed otherwise in writing. In no event however, shall an agreement be valid in which the Nexperia product is deemed to offer functions and qualities beyond those described in the Product data sheet.

Disclaimers

Limited warranty and liability — Information in this document is believed to be accurate and reliable. However, Nexperia does not give any representations or warranties, expressed or implied, as to the accuracy or completeness of such information and shall have no liability for the consequences of use of such information. Nexperia takes no responsibility for the content in this document if provided by an information source outside of Nexperia.

In no event shall Nexperia be liable for any indirect, incidental, punitive, special or consequential damages (including - without limitation - lost profits, lost savings, business interruption, costs related to the removal or replacement of any products or rework charges) whether or not such damages are based on tort (including negligence), warranty, breach of contract or any other legal theory.

Notwithstanding any damages that customer might incur for any reason whatsoever, Nexperia's aggregate and cumulative liability towards customer for the products described herein shall be limited in accordance with the Terms and conditions of commercial sale of Nexperia.

Right to make changes — Nexperia reserves the right to make changes to information published in this document, including without limitation specifications and product descriptions, at any time and without notice. This document supersedes and replaces all information supplied prior to the publication hereof.

Suitability for use — Nexperia products are not designed, authorized or warranted to be suitable for use in life support, life-critical or safety-critical systems or equipment, nor in applications where failure or malfunction of an Nexperia product can reasonably be expected to result in personal injury, death or severe property or environmental damage. Nexperia and its suppliers accept no liability for inclusion and/or use of Nexperia products in such equipment or applications and therefore such inclusion and/or use is at the customer's own risk.

Quick reference data — The Quick reference data is an extract of the product data given in the Limiting values and Characteristics sections of this document, and as such is not complete, exhaustive or legally binding.

Applications — Applications that are described herein for any of these products are for illustrative purposes only. Nexperia makes no representation or warranty that such applications will be suitable for the specified use without further testing or modification.

Customers are responsible for the design and operation of their applications and products using Nexperia products, and Nexperia accepts no liability for any assistance with applications or customer product design. It is customer's sole responsibility to determine whether the Nexperia product is suitable and fit for the customer's applications and products planned, as well as for the planned application and use of customer's third party customer(s). Customers should provide appropriate design and operating safeguards to minimize the risks associated with their applications and products.

Nexperia does not accept any liability related to any default, damage, costs or problem which is based on any weakness or default in the customer's applications or products, or the application or use by customer's third party customer(s). Customer is responsible for doing all necessary testing for the customer's applications and products using Nexperia products in order to avoid a default of the applications and the products or of the application or use by customer's third party customer(s). Nexperia does not accept any liability in this respect.

Limiting values — Stress above one or more limiting values (as defined in the Absolute Maximum Ratings System of IEC 60134) will cause permanent damage to the device. Limiting values are stress ratings only and (proper) operation of the device at these or any other conditions above those given in the Recommended operating conditions section (if present) or the Characteristics sections of this document is not warranted. Constant or repeated exposure to limiting values will permanently and irreversibly affect the quality and reliability of the device.

Terms and conditions of commercial sale — Nexperia products are sold subject to the general terms and conditions of commercial sale, as published at http://www.nexperia.com/profile/terms, unless otherwise agreed in a valid written individual agreement. In case an individual agreement is concluded only the terms and conditions of the respective agreement shall apply. Nexperia hereby expressly objects to applying the customer's general terms and conditions with regard to the purchase of Nexperia products by customer.

No offer to sell or license — Nothing in this document may be interpreted or construed as an offer to sell products that is open for acceptance or the grant, conveyance or implication of any license under any copyrights, patents or other industrial or intellectual property rights.

Export control — This document as well as the item(s) described herein may be subject to export control regulations. Export might require a prior authorization from competent authorities.

Non-automotive qualified products — Unless this data sheet expressly states that this specific Nexperia product is automotive qualified, the product is not suitable for automotive use. It is neither qualified nor tested in accordance with automotive testing or application requirements. Nexperia accepts no liability for inclusion and/or use of non-automotive qualified products in automotive equipment or applications.

In the event that customer uses the product for design-in and use in automotive applications to automotive specifications and standards, customer (a) shall use the product without Nexperia's warranty of the product for such automotive applications, use and specifications, and (b) whenever customer uses the product for automotive applications beyond Nexperia's specifications such use shall be solely at customer's own risk, and (c) customer fully indemnifies Nexperia for any liability, damages or failed product claims resulting from customer design and use of the product for automotive applications beyond Nexperia's standard warranty and Nexperia's product specifications.

Translations — A non-English (translated) version of a document is for reference only. The English version shall prevail in case of any discrepancy between the translated and English versions.

Trademarks

Notice: All referenced brands, product names, service names and trademarks are the property of their respective owners.

All information provided in this document is subject to legal disclaimers.

© Nexperia B.V. 2019. All rights reserved

Contents

1. General description.....1
2. Features and benefits.....1
3. Ordering information.....1
4. Functional diagram.....2
5. Pinning information.....3
5.1. Pinning.....3
5.2. Pin description.....3
6. Functional description.....4
7. Limiting values.....4
8. Recommended operating conditions.....5
9. Static characteristics.....5
10. Dynamic characteristics.....7
11. Package outline.....10
12. Abbreviations.....13
13. Revision history.....13
14. Legal information.....14

© Nexperia B.V. 2019. All rights reserved

For more information, please visit: http://www.nexperia.com
For sales office addresses, please send an email to: salesaddresses@nexperia.com
Date of release: 13 August 2019

Компания «ЭлектроПласт» предлагает заключение долгосрочных отношений при поставках импортных электронных компонентов на взаимовыгодных условиях!

Наши преимущества:

- Оперативные поставки широкого спектра электронных компонентов отечественного и импортного производства напрямую от производителей и с крупнейших мировых складов;
- Поставка более 17-ти миллионов наименований электронных компонентов;
- Поставка сложных, дефицитных, либо снятых с производства позиций;
- Оперативные сроки поставки под заказ (от 5 рабочих дней);
- Экспресс доставка в любую точку России;
- Техническая поддержка проекта, помощь в подборе аналогов, поставка прототипов;
- Система менеджмента качества сертифицирована по Международному стандарту ISO 9001;
- Лицензия ФСБ на осуществление работ с использованием сведений, составляющих государственную тайну;
- Поставка специализированных компонентов (Xilinx, Altera, Analog Devices, Intersil, Interpoint, Microsemi, Aeroflex, Peregrine, Syfer, Eurofarad, Texas Instrument, Miteq, Cobham, E2V, MA-COM, Hittite, Mini-Circuits,General Dynamics и др.);

Помимо этого, одним из направлений компании «ЭлектроПласт» является направление «Источники питания». Мы предлагаем Вам помощь Конструкторского отдела:

- Подбор оптимального решения, техническое обоснование при выборе компонента;
- Подбор аналогов;
- Консультации по применению компонента;
- Поставка образцов и прототипов;
- Техническая поддержка проекта;
- Защита от снятия компонента с производства.

Как с нами связаться

Телефон: 8 (812) 309 58 32 (многоканальный)
Факс: 8 (812) 320-02-42
Электронная почта: org@eplast1.ru
Адрес: 198099, г. Санкт-Петербург, ул. Калинина, дом 2, корпус 4, литера А.