MC74AC08, MC74ACT08

Quad 2-Input AND Gate

ON Semiconductor®

http://onsemi.com

Features

- Outputs Source/Sink 24 mA
- ′ACT08 Has TTL Compatible Inputs
- Pb−Free Packages are Available

MAXIMUM RATINGS

Rating	Symbol	Value	Unit
DC Supply Voltage (Referenced to GND)	V_{CC}	−0.5 to +7.0	V
DC Input Voltage (Referenced to GND)	V_{in}	−0.5 to V_{CC} +0.5	V
DC Output Voltage (Referenced to GND)	V_{out}	−0.5 to V_{CC} +0.5	V
DC Input Current, per Pin	I_{in}	±20	mA
DC Output Sink/Source Current, per Pin	I_{out}	±50	mA
DC V_{CC} or GND Current per Output Pin	I_{CC}	±50	mA
Storage Temperature	T_{stg}	−65 to +150	°C

Stresses exceeding Maximum Ratings may damage the device. Maximum Ratings are stress ratings only. Functional operation above the Recommended Operating Conditions is not implied. Extended exposure to stresses above the Recommended Operating Conditions may affect device reliability.

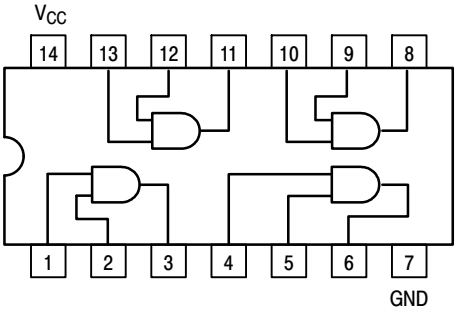

Figure 1. Pinout: 14−Lead Packages Conductors
(Top View)

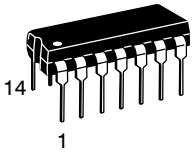

PDIP−14
N SUFFIX
CASE 646

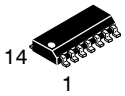

SO−14
D SUFFIX
CASE 751A

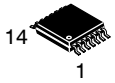

TSSOP−14
DT SUFFIX
CASE 948G

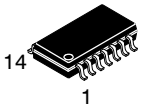

SOEIAJ−14
M SUFFIX
CASE 965

ORDERING INFORMATION

See detailed ordering and shipping information in the package dimensions section on page 5 of this data sheet.

DEVICE MARKING INFORMATION

See general marking information in the device marking section on page 5 of this data sheet.

© Semiconductor Components Industries, LLC, 2010

May, 2010 − Rev. 9

Publication Order Number:
MC74AC08/D

RECOMMENDED OPERATING CONDITIONS

Symbol	Parameter		Min	Typ	Max	Unit
V_{CC}	Supply Voltage	′AC	2.0	5.0	6.0	V
		′ACT	4.5	5.0	5.5	
V_{in}, V_{out}	DC Input Voltage, Output Voltage (Ref. to GND)		0	–	V_{CC}	V
t_r, t_f	Input Rise and Fall Time (Note 1) ′AC Devices except Schmitt Inputs	V_{CC} @ 3.0 V	–	150	–	ns/V
		V_{CC} @ 4.5 V	–	40	–	
		V_{CC} @ 5.5 V	–	25	–	
t_r, t_f	Input Rise and Fall Time (Note 2) ′ACT Devices except Schmitt Inputs	V_{CC} @ 4.5 V	–	10	–	ns/V
		V_{CC} @ 5.5 V	–	8.0	–	
T_J	Junction Temperature (PDIP)		–	–	140	°C
T_A	Operating Ambient Temperature Range		−40	25	85	°C
I_{OH}	Output Current – High		–	–	−24	mA
I_{OL}	Output Current – Low		–	–	24	mA

1. V_{in} from 30% to 70% V_{CC}; see individual Data Sheets for devices that differ from the typical input rise and fall times.
2. V_{in} from 0.8 V to 2.0 V; see individual Data Sheets for devices that differ from the typical input rise and fall times.

DC CHARACTERISTICS

Symbol	Parameter	Conditions	V_{CC} (V)	74AC T_A = +25°C Typ	74AC T_A = +25°C Guaranteed Limits	74AC T_A = −40°C to +85°C Guaranteed Limits	Unit
V_{IH}	Minimum High Level Input Voltage	V_{OUT} = 0.1 V or V_{CC} – 0.1 V	3.0	1.5	2.1	2.1	V
			4.5	2.25	3.15	3.15	
			5.5	2.75	3.85	3.85	
V_{IL}	Maximum Low Level Input Voltage	V_{OUT} = 0.1 V or V_{CC} – 0.1 V	3.0	1.5	0.9	0.9	V
			4.5	2.25	1.35	1.35	
			5.5	2.75	1.65	1.65	
V_{OH}	Minimum High Level Output Voltage	I_{OUT} = −50 μA	3.0	2.99	2.9	2.9	V
			4.5	4.49	4.4	4.4	
			5.5	5.49	5.4	5.4	
		V_{IN} = V_{IL} or V_{IH} (Note 3) I_{OH} −12 mA	3.0	–	2.56	2.46	V
		I_{OH} −24 mA	4.5	–	3.86	3.76	
		I_{OH} −24 mA	5.5	–	4.86	4.76	
V_{OL}	Maximum Low Level Output Voltage	V_{IN} = V_{IL} or V_{IH}(Note 3) I_{OL} 12 mA	3.0	–	0.36	0.44	V
		I_{OL} 24 mA	4.5	–	0.36	0.44	
		I_{OL} 24 mA	5.5	–	0.36	0.44	
I_{IN}	Maximum Input Leakage Current	V_I = V_{CC}, GND	5.5	–	±0.1	±1.0	μA
I_{OLD}	Minimum Dynamic (Note 4) Output Current	V_{OLD} = 1.65 V Max	5.5	–	–	75	mA
I_{OHD}		V_{OHD} = 3.85 V Min	5.5	–	–	−75	mA
I_{CC}	Maximum Quiescent Supply Current	V_{IN} = V_{CC} or GND	5.5	–	4.0	40	μA

NOTE: I_{IN} and I_{CC} @ 3.0 V are guaranteed to be less than or equal to the respective limit @ 5.5 V V_{CC}.

3. All outputs loaded; thresholds on input associated with output under test.
4. Maximum test duration 2.0 ms, one output loaded at a time.

AC CHARACTERISTICS (For Figures and Waveforms – See Section 3 of the ON Semiconductor FACT Data Book, DL138/D)

Symbol	Parameter	V_{CC} (V) (Note5)	74AC T_A = +25°C C_L = 50 pF Min	Typ	Max	74AC T_A = –40°C to +85°C C_L = 50 pF Min	Max	Unit	Fig. No.
t_{PLH}	Propagation Delay	3.3	1.5	7.5	9.5	1.0	10.0	ns	3–5
		5.0	1.5	5.5	7.5	1.0	8.5		
t_{PHL}	Propagation Delay	3.3	1.5	7.0	8.5	1.0	9.0	ns	3–5
		5.0	1.5	5.5	7.0	1.0	7.5		

5. Voltage Range 3.3 V is 3.3 V ±0.3 V.
   Voltage Range 5.0 V is 5.0 V ±0.5 V.

DC CHARACTERISTICS

Symbol	Parameter	Conditions	V_{CC} (V)	74ACT T_A = +25°C Typ	74ACT T_A = –40°C to +85°C Guaranteed Limits		Unit
V_{IH}	Minimum High Level Input Voltage	V_{OUT} = 0.1 V	4.5	1.5	2.0	2.0	V
		or V_{CC} – 0.1 V	5.5	1.5	2.0	2.0	
V_{IL}	Maximum Low Level Input Voltage	V_{OUT} = 0.1 V	4.5	1.5	0.8	0.8	V
		or V_{CC} – 0.1 V	5.5	1.5	0.8	0.8	
V_{OH}	Minimum High Level Output Voltage	I_{OUT} = –50 μA	4.5	4.49	4.4	4.4	V
			5.5	5.49	5.4	5.4	
		V_{IN} = V_{IL} or V_{IH} (Note 6)					V
		–24 mA	4.5	–	3.86	3.76	
		–24 mA	5.5	–	4.86	4.76	
V_{OL}	Maximum Low Level Output Voltage	I_{OUT} = 50 μA	4.5	0.001	0.1	0.1	V
			5.5	0.001	0.1	0.1	
		V_{IN} = V_{IL} or V_{IH} (Note 6)					V
		24 mA	4.5	–	0.36	0.44	
		24 mA	5.5	–	0.36	0.44	
I_{IN}	Maximum Input Leakage Current	V_I = V_{CC}, GND	5.5	–	±0.1	±1.0	μA
ΔI_{CCT}	Additional Max. I_{CC}/Input	V_I = V_{CC} – 2.1 V	5.5	0.6	–	1.5	mA
I_{OLD}	Minimum Dynamic (Note 7) Output Current	V_{OLD} = 1.65 V Max	5.5	–	–	75	mA
I_{OHD}		V_{OHD} = 3.85 V Min	5.5	–	–	–75	mA
I_{CC}	Maximum Quiescent Supply Current	V_{IN} = V_{CC} or GND	5.5	–	4.0	40	μA

6. All outputs loaded; thresholds on input associated with output under test.
7. Maximum test duration 2.0 ms, one output loaded at a time.

AC CHARACTERISTICS (For Figures and Waveforms – See Section 3 of the ON Semiconductor FACT Data Book, DL138/D)

Symbol	Parameter	V_{CC} (V) (Note 8)	74ACT T_A = +25°C C_L = 50 pF			74ACT T_A = –40°C to +85°C C_L = 50 pF		Unit	Fig. No.
			Min	Typ	Max	Min	Max		
t_{PLH}	Propagation Delay	5.0	1.0	–	9.0	1.0	10.0	ns	3–5
t_{PHL}	Propagation Delay	5.0	1.0	–	9.0	1.0	10.0	ns	3–5

8. Voltage Range 5.0 V is 5.0 V ±0.5 V.

CAPACITANCE

Symbol	Parameter	Test Conditions	Value Typ	Unit
C_{IN}	Input Capacitance	V_{CC} = 5.0 V	4.5	pF
C_{PD}	Power Dissipation Capacitance	V_{CC} = 5.0 V	20	pF

MARKING DIAGRAMS

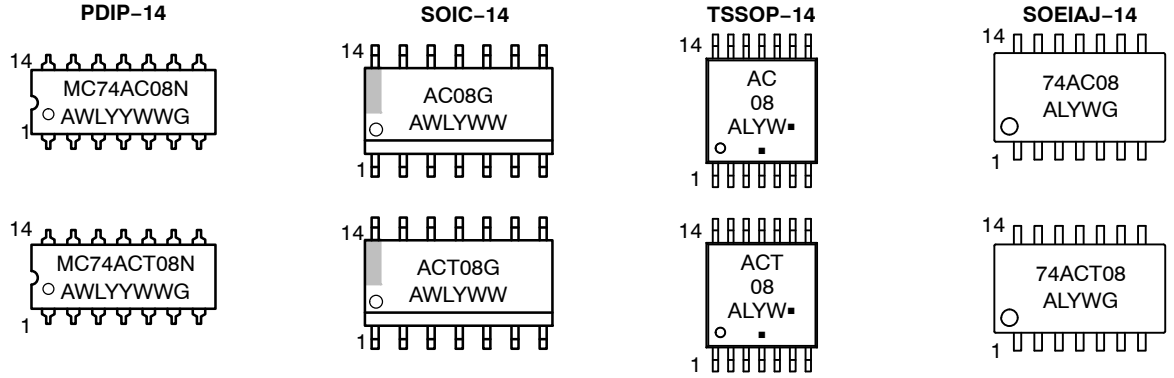

A = Assembly Location
WL, L = Wafer Lot
YY, Y = Year
WW, W = Work Week
G or ▪ = Pb−free Package
(Note: Microdot may be in either location)

ORDERING INFORMATION

Device	Package	Shipping†
MC74AC08NG	PDIP−14 (Pb−Free)	25 Units / Rail
MC74AC08D	SOIC−14	55 Units / Rail
MC74AC08DG	SOIC−14 (Pb−Free)	
MC74AC08DR2	SOIC−14	2500 / Tape & Reel
MC74AC08DR2G	SOIC−14 (Pb−Free)	
MC74AC08DTR2	TSSOP−14*	
MC74AC08DTR2G	TSSOP−14*	
MC74AC08MEL	SOEIAJ−14	2000 / Tape & Reel
MC74AC08MELG	SOEIAJ−14 (Pb−Free)	
MC74ACT08N	PDIP−14	25 Units / Rail
MC74ACT08NG	PDIP−14 (Pb−Free)	
MC74ACT08D	SOIC−14	55 Units / Rail
MC74ACT08DG	SOIC−14 (Pb−Free)	
MC74ACT08DR2	SOIC−14	2500 / Tape & Reel
MC74ACT08DR2G	SOIC−14 (Pb−Free)	
MC74ACT08DR2GH	SOIC−14 (Pb−Free, Halide−Free)	
MC74ACT08DTR2	TSSOP−14*	
MC74ACT08DTR2G	TSSOP−14*	
MC74ACT08MELG	SOEIAJ−14 (Pb−Free)	2000 / Tape & Reel

†For information on tape and reel specifications, including part orientation and tape sizes, please refer to our Tape and Reel Packaging Specifications Brochure, BRD8011/D.
*This package is inherently Pb−Free.

PACKAGE DIMENSIONS

PDIP−14
CASE 646−06
ISSUE P

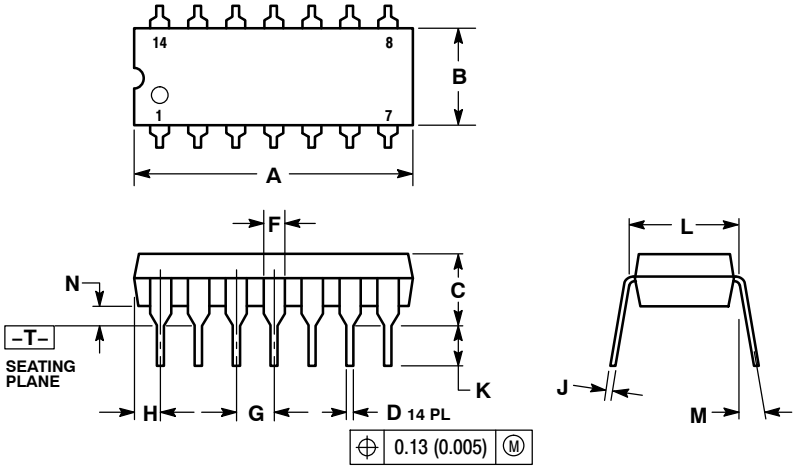

NOTES:
1. DIMENSIONING AND TOLERANCING PER ANSI Y14.5M, 1982.
2. CONTROLLING DIMENSION: INCH.
3. DIMENSION L TO CENTER OF LEADS WHEN FORMED PARALLEL.
4. DIMENSION B DOES NOT INCLUDE MOLD FLASH.
5. ROUNDED CORNERS OPTIONAL.

	INCHES		MILLIMETERS	
DIM	MIN	MAX	MIN	MAX
A	0.715	0.770	18.16	19.56
B	0.240	0.260	6.10	6.60
C	0.145	0.185	3.69	4.69
D	0.015	0.021	0.38	0.53
F	0.040	0.070	1.02	1.78
G	0.100 BSC		2.54 BSC	
H	0.052	0.095	1.32	2.41
J	0.008	0.015	0.20	0.38
K	0.115	0.135	2.92	3.43
L	0.290	0.310	7.37	7.87
M	−−−	10 °	−−−	10 °
N	0.015	0.039	0.38	1.01

PACKAGE DIMENSIONS

SOIC−14
CASE 751A−03
ISSUE J

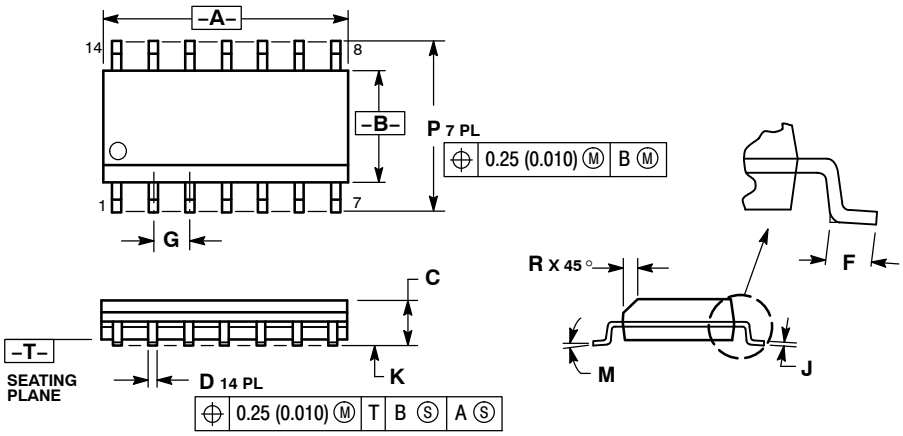

NOTES:
1. DIMENSIONING AND TOLERANCING PER ANSI Y14.5M, 1982.
2. CONTROLLING DIMENSION: MILLIMETER.
3. DIMENSIONS A AND B DO NOT INCLUDE MOLD PROTRUSION.
4. MAXIMUM MOLD PROTRUSION 0.15 (0.006) PER SIDE.
5. DIMENSION D DOES NOT INCLUDE DAMBAR PROTRUSION. ALLOWABLE DAMBAR PROTRUSION SHALL BE 0.127 (0.005) TOTAL IN EXCESS OF THE D DIMENSION AT MAXIMUM MATERIAL CONDITION.

	MILLIMETERS		INCHES	
DIM	MIN	MAX	MIN	MAX
A	8.55	8.75	0.337	0.344
B	3.80	4.00	0.150	0.157
C	1.35	1.75	0.054	0.068
D	0.35	0.49	0.014	0.019
F	0.40	1.25	0.016	0.049
G	1.27 BSC		0.050 BSC	
J	0.19	0.25	0.008	0.009
K	0.10	0.25	0.004	0.009
M	0°	7°	0°	7°
P	5.80	6.20	0.228	0.244
R	0.25	0.50	0.010	0.019

SOLDERING FOOTPRINT*

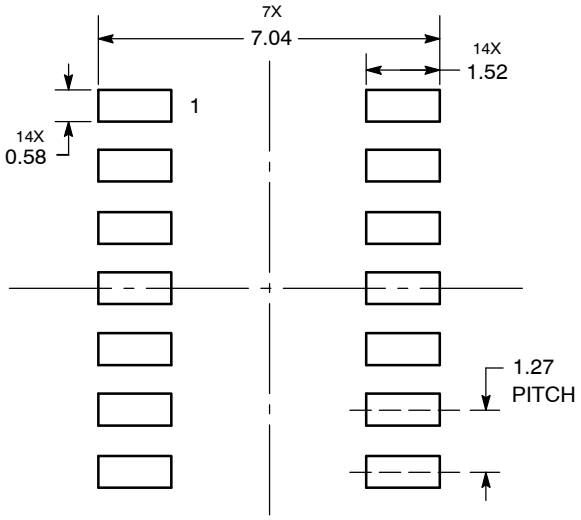

DIMENSIONS: MILLIMETERS

*For additional information on our Pb−Free strategy and soldering details, please download the ON Semiconductor Soldering and Mounting Techniques Reference Manual, SOLDERRM/D.

PACKAGE DIMENSIONS

TSSOP−14
CASE 948G−01
ISSUE B

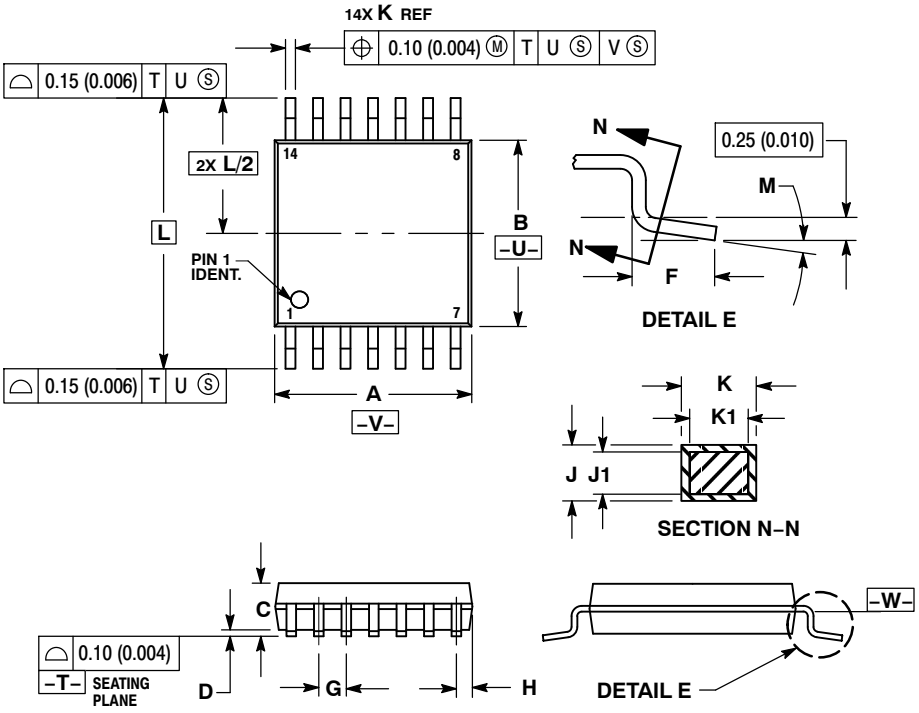

NOTES:
1. DIMENSIONING AND TOLERANCING PER ANSI Y14.5M, 1982.
2. CONTROLLING DIMENSION: MILLIMETER.
3. DIMENSION A DOES NOT INCLUDE MOLD FLASH, PROTRUSIONS OR GATE BURRS. MOLD FLASH OR GATE BURRS SHALL NOT EXCEED 0.15 (0.006) PER SIDE.
4. DIMENSION B DOES NOT INCLUDE INTERLEAD FLASH OR PROTRUSION. INTERLEAD FLASH OR PROTRUSION SHALL NOT EXCEED 0.25 (0.010) PER SIDE.
5. DIMENSION K DOES NOT INCLUDE DAMBAR PROTRUSION. ALLOWABLE DAMBAR PROTRUSION SHALL BE 0.08 (0.003) TOTAL IN EXCESS OF THE K DIMENSION AT MAXIMUM MATERIAL CONDITION.
6. TERMINAL NUMBERS ARE SHOWN FOR REFERENCE ONLY.
7. DIMENSION A AND B ARE TO BE DETERMINED AT DATUM PLANE −W−.

	MILLIMETERS		INCHES	
DIM	MIN	MAX	MIN	MAX
A	4.90	5.10	0.193	0.200
B	4.30	4.50	0.169	0.177
C	−−−	1.20	−−−	0.047
D	0.05	0.15	0.002	0.006
F	0.50	0.75	0.020	0.030
G	0.65 BSC		0.026 BSC	
H	0.50	0.60	0.020	0.024
J	0.09	0.20	0.004	0.008
J1	0.09	0.16	0.004	0.006
K	0.19	0.30	0.007	0.012
K1	0.19	0.25	0.007	0.010
L	6.40 BSC		0.252 BSC	
M	0 °	8 °	0 °	8 °

SOLDERING FOOTPRINT*

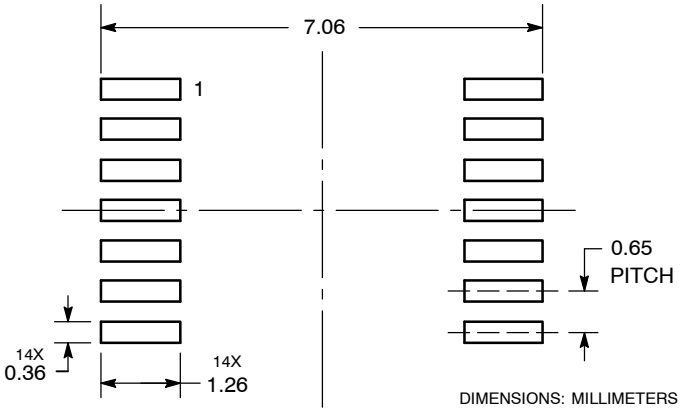

*For additional information on our Pb−Free strategy and soldering details, please download the ON Semiconductor Soldering and Mounting Techniques Reference Manual, SOLDERRM/D.

PACKAGE DIMENSIONS

SOEIAJ−14
CASE 965−01
ISSUE B

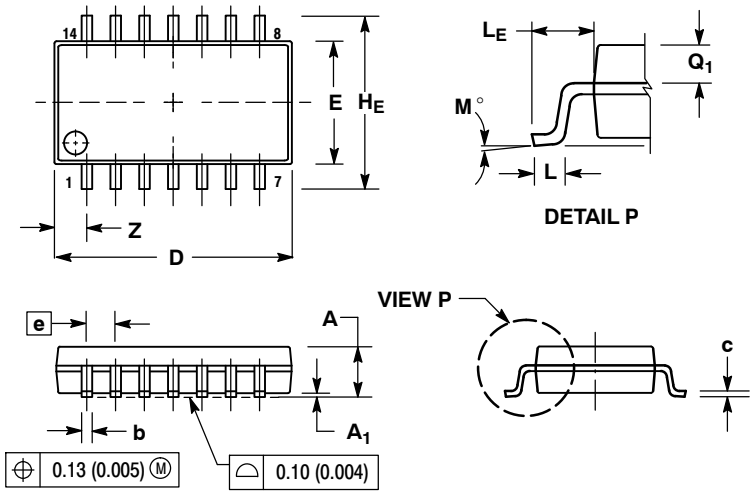

NOTES:
1. DIMENSIONING AND TOLERANCING PER ANSI Y14.5M, 1982.
2. CONTROLLING DIMENSION: MILLIMETER.
3. DIMENSIONS D AND E DO NOT INCLUDE MOLD FLASH OR PROTRUSIONS AND ARE MEASURED AT THE PARTING LINE. MOLD FLASH OR PROTRUSIONS SHALL NOT EXCEED 0.15 (0.006) PER SIDE.
4. TERMINAL NUMBERS ARE SHOWN FOR REFERENCE ONLY.
5. THE LEAD WIDTH DIMENSION (b) DOES NOT INCLUDE DAMBAR PROTRUSION. ALLOWABLE DAMBAR PROTRUSION SHALL BE 0.08 (0.003) TOTAL IN EXCESS OF THE LEAD WIDTH DIMENSION AT MAXIMUM MATERIAL CONDITION. DAMBAR CANNOT BE LOCATED ON THE LOWER RADIUS OR THE FOOT. MINIMUM SPACE BETWEEN PROTRUSIONS AND ADJACENT LEAD TO BE 0.46 (0.018).

	MILLIMETERS		INCHES	
DIM	MIN	MAX	MIN	MAX
A	---	2.05	---	0.081
A_1	0.05	0.20	0.002	0.008
b	0.35	0.50	0.014	0.020
c	0.10	0.20	0.004	0.008
D	9.90	10.50	0.390	0.413
E	5.10	5.45	0.201	0.215
e	1.27 BSC		0.050 BSC	
H_E	7.40	8.20	0.291	0.323
L	0.50	0.85	0.020	0.033
L_E	1.10	1.50	0.043	0.059
M	0 °	10 °	0 °	10 °
Q_1	0.70	0.90	0.028	0.035
Z	---	1.42	---	0.056

ON Semiconductor and ON are registered trademarks of Semiconductor Components Industries, LLC (SCILLC). SCILLC reserves the right to make changes without further notice to any products herein. SCILLC makes no warranty, representation or guarantee regarding the suitability of its products for any particular purpose, nor does SCILLC assume any liability arising out of the application or use of any product or circuit, and specifically disclaims any and all liability, including without limitation special, consequential or incidental damages. “Typical” parameters which may be provided in SCILLC data sheets and/or specifications can and do vary in different applications and actual performance may vary over time. All operating parameters, including “Typicals” must be validated for each customer application by customer’s technical experts. SCILLC does not convey any license under its patent rights nor the rights of others. SCILLC products are not designed, intended, or authorized for use as components in systems intended for surgical implant into the body, or other applications intended to support or sustain life, or for any other application in which the failure of the SCILLC product could create a situation where personal injury or death may occur. Should Buyer purchase or use SCILLC products for any such unintended or unauthorized application, Buyer shall indemnify and hold SCILLC and its officers, employees, subsidiaries, affiliates, and distributors harmless against all claims, costs, damages, and expenses, and reasonable attorney fees arising out of, directly or indirectly, any claim of personal injury or death associated with such unintended or unauthorized use, even if such claim alleges that SCILLC was negligent regarding the design or manufacture of the part. SCILLC is an Equal Opportunity/Affirmative Action Employer. This literature is subject to all applicable copyright laws and is not for resale in any manner.

PUBLICATION ORDERING INFORMATION

LITERATURE FULFILLMENT:
Literature Distribution Center for ON Semiconductor
P.O. Box 5163, Denver, Colorado 80217 USA
Phone: 303−675−2175 or 800−344−3860 Toll Free USA/Canada
Fax: 303−675−2176 or 800−344−3867 Toll Free USA/Canada
Email: orderlit@onsemi.com

N. American Technical Support: 800−282−9855 Toll Free USA/Canada
Europe, Middle East and Africa Technical Support:
Phone: 421 33 790 2910
Japan Customer Focus Center
Phone: 81−3−5773−3850

ON Semiconductor Website: **www.onsemi.com**

Order Literature: http://www.onsemi.com/orderlit

For additional information, please contact your local Sales Representative

Компания «ЭлектроПласт» предлагает заключение долгосрочных отношений при поставках импортных электронных компонентов на взаимовыгодных условиях!

Наши преимущества:

- Оперативные поставки широкого спектра электронных компонентов отечественного и импортного производства напрямую от производителей и с крупнейших мировых складов;
- Поставка более 17-ти миллионов наименований электронных компонентов;
- Поставка сложных, дефицитных, либо снятых с производства позиций;
- Оперативные сроки поставки под заказ (от 5 рабочих дней);
- Экспресс доставка в любую точку России;
- Техническая поддержка проекта, помощь в подборе аналогов, поставка прототипов;
- Система менеджмента качества сертифицирована по Международному стандарту ISO 9001;
- Лицензия ФСБ на осуществление работ с использованием сведений, составляющих государственную тайну;
- Поставка специализированных компонентов (Xilinx, Altera, Analog Devices, Intersil, Interpoint, Microsemi, Aeroflex, Peregrine, Syfer, Eurofarad, Texas Instrument, Miteq, Cobham, E2V, MA-COM, Hittite, Mini-Circuits,General Dynamics и др.);

Помимо этого, одним из направлений компании «ЭлектроПласт» является направление «Источники питания». Мы предлагаем Вам помощь Конструкторского отдела:

- Подбор оптимального решения, техническое обоснование при выборе компонента;
- Подбор аналогов;
- Консультации по применению компонента;
- Поставка образцов и прототипов;
- Техническая поддержка проекта;
- Защита от снятия компонента с производства.

Как с нами связаться

Телефон: 8 (812) 309 58 32 (многоканальный)
Факс: 8 (812) 320-02-42
Электронная почта: org@eplast1.ru
Адрес: 198099, г. Санкт-Петербург, ул. Калинина, дом 2, корпус 4, литера А.