Important notes about Classic Panel Mount Indicator Catalog Pages

SCROLL DOWN TO VIEW CATALOG PAGE

This catalog page is out-of-print and is used with the understanding that the information shown could be out-of-date. In many cases, part numbers shown on this page are discontinued. Most notably, many “Complete Assembly” parts, which consist of a cap and a base, can no longer be ordered by the 14-digit ordering code. To obtain these parts, please order the cap and base part numbers separately. This process provides the components contained with the original “Complete Assembly” part number.

All Dialight Classic Panel Mount Indicators need a leading 3-digit numerical series. In some cases, this catalog will show a 2-digit series. In this case, please add a leading zero. For example, 81-0211-300 becomes **0**81-0211-300.

Part numbers listed on Dialight catalog pages designate parts with Red lenses. For ordering lens colors other than red, consult the chart below. In most cases, the color is dictated by the 7th digit. For example, 095-093**2**-003 for a green cap.

Lens Colors	
1 - Red	5 - White
2 - Green	6 - Light Yellow
3 - Yellow	7 - Clear
4 - Blue	

Click here for a cross reference guide to assembly part numbers.

Click here to view Frequently Asked Questions concerning Panel Mount Indicators.

SCROLL DOWN TO VIEW CATALOG PAGE

Incandescent Indicators

for Translucent Panel Edge Lighting

for use with MIL-P-7788 Plastic Panels

T-1 3/4
MIDGET
FLANGE BASE

See lamp ratings on page J.

FOR FRONT MOUNTING IN 15/32" CLEARANCE HOLE

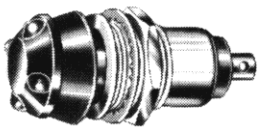

270–1930–0111–702

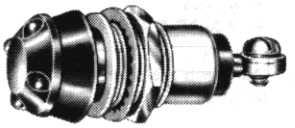

270–1830–0111–702

ONE TERMINAL

These indicators are designed to emit light through a colored filter radially into the plastic plate. A resilient light seal washer (light trap) insures against light loss at the front of the panel.

When it is necessary to insulate the mounting bushing of the one-terminal grounded lights from the metal panel, 2 insulating washers and 1 grounding terminal may be provided. See Insulating Mounting on page 31C.

NOTE: Revision E dated 5 February 1971 made MS25010 inactive. Assemblies with the Type C Indicator Base were superseded by LH92/1 and LC34 Series per MIL–L–3661 /51 and /34. No superseding assemblies were offered for those using the Type A and B Base. However, due to the popularity of these MS assemblies and to facilitate your future procurement, we have continued to list these assemblies, the comparable Military Type designations and the Dialight Part Numbers.

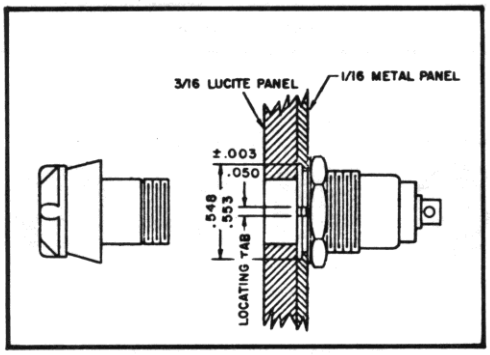

MATERIALS AND FINISHES

- **Mounting Bushing:** Brass, cadmium plated with yellow iridescent chromate finish.
- **Hardware:** Internal-tooth lockwasher and hex mounting nut—steel, cadmium plated with yellow iridescent chromate finish.
- **Terminals:** **Solder** – Brass, hot-tinned.
  Screw – Brass, cadmium plated with yellow iridescent chromate finish.

Note: On all units, the shank of the lens holder is crimped in 3 evenly spaced places to secure the lamp.

MS25010 – REVISION D
QPL LISTED

solder terminal	screw terminal
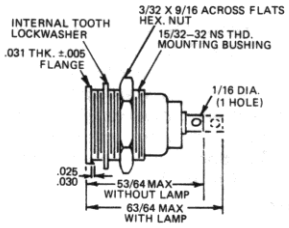	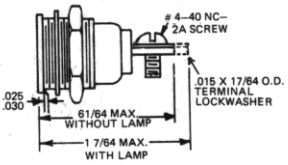
Max. panel thickness 13/64"	Max. panel thickness 13/64"
270-1930-702	270-1830-702

HOLDER (filter cap) ASSEMBLY PART NUMBERS — **BASE PART NUMBERS**

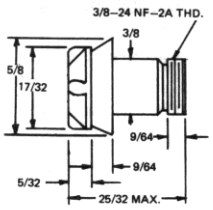

Part number	Top color	Filter color	Light seal washer-opaque	COMPLETE ASSEMBLY PART NUMBERS: Part number	*Mil. Std. Dwg. No.■	Part number	*Mil. Std. Dwg. No.■
270-0111	Black	Red	Black	270-1930-0111-702	MS25010A11A	270-1830-0111-702	MS25010B11A
270-0171	Black	Clear	Black	270-1930-0171-702	MS25010A12A	270-1830-0171-702	MS25010B12A
270-0212	Gray	Red	Gray	270-1930-0212-702	MS25010A15A	270-1830-0212-702	MS25010B15A
270-0272	Gray	Clear	Gray	270-1930-0272-702	MS25010A16A	270-1830-0272-702	MS25010B16A

* To designate an assembly by MS number complete with MS25237–327 or MS25237–328 lamp requires the call out and addition of the lamp number to the MS number suffix.
Examples: MS25010A12A**327**; MS25010B16A**328**. There is no MS designation of the assembly complete with other lamps listed.

■ The complete assembly will be marked with MS part number for Mounting Base only.

Part numbers shown in gray are normally in inventory at your Dialight Distributor.

Компания «ЭлектроПласт» предлагает заключение долгосрочных отношений при поставках импортных электронных компонентов на взаимовыгодных условиях!

Наши преимущества:

- Оперативные поставки широкого спектра электронных компонентов отечественного и импортного производства напрямую от производителей и с крупнейших мировых складов;
- Поставка более 17-ти миллионов наименований электронных компонентов;
- Поставка сложных, дефицитных, либо снятых с производства позиций;
- Оперативные сроки поставки под заказ (от 5 рабочих дней);
- Экспресс доставка в любую точку России;
- Техническая поддержка проекта, помощь в подборе аналогов, поставка прототипов;
- Система менеджмента качества сертифицирована по Международному стандарту ISO 9001;
- Лицензия ФСБ на осуществление работ с использованием сведений, составляющих государственную тайну;
- Поставка специализированных компонентов (Xilinx, Altera, Analog Devices, Intersil, Interpoint, Microsemi, Aeroflex, Peregrine, Syfer, Eurofarad, Texas Instrument, Miteq, Cobham, E2V, MA-COM, Hittite, Mini-Circuits,General Dynamics и др.);

Помимо этого, одним из направлений компании «ЭлектроПласт» является направление «Источники питания». Мы предлагаем Вам помощь Конструкторского отдела:

- Подбор оптимального решения, техническое обоснование при выборе компонента;
- Подбор аналогов;
- Консультации по применению компонента;
- Поставка образцов и прототипов;
- Техническая поддержка проекта;
- Защита от снятия компонента с производства.

Как с нами связаться

Телефон: 8 (812) 309 58 32 (многоканальный)
Факс: 8 (812) 320-02-42
Электронная почта: org@eplast1.ru
Адрес: 198099, г. Санкт-Петербург, ул. Калинина, дом 2, корпус 4, литера А.