DACPORT Low Cost, Complete μP-Compatible 8-Bit DAC

AD558

FEATURES
Complete 8-Bit DAC
Voltage Output–2 Calibrated Ranges
Internal Precision Bandgap Reference
Single-Supply Operation: +5 V to +15 V
Full Microprocessor Interface
Fast: 1 μs Voltage Settling to ±1/2 LSB
Low Power: 75 mW
No User Trims
Guaranteed Monotonic Over Temperature
All Errors Specified T_{MIN} to T_{MAX}
Small 16-Pin DIP and 20-Pin PLCC Packages
Single Laser-Wafer-Trimmed Chip for Hybrids
Low Cost
MIL-STD-883 Compliant Versions Available

FUNCTIONAL BLOCK DIAGRAM

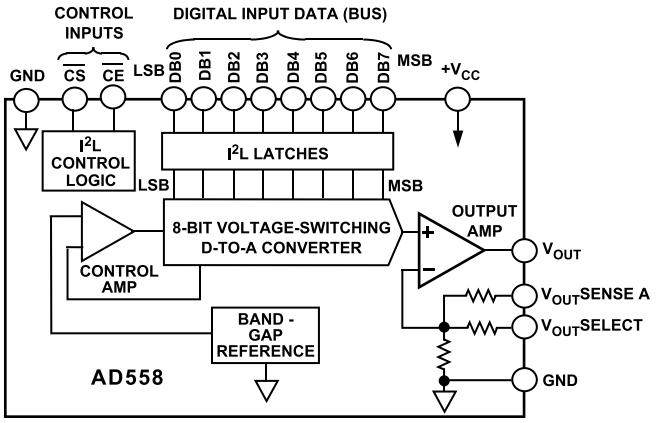

PRODUCT DESCRIPTION

The AD558 DACPORT® is a complete voltage-output 8-bit digital-to-analog converter, including output amplifier, full microprocessor interface and precision voltage reference on a single monolithic chip. No external components or trims are required to interface, with full accuracy, an 8-bit data bus to an analog system.

The performance and versatility of the DACPORT is a result of several recently-developed monolithic bipolar technologies. The complete microprocessor interface and control logic is implemented with integrated injection logic (I^2L), an extremely dense and low power logic structure that is process-compatible with linear bipolar fabrication. The internal precision voltage reference is the patented low voltage bandgap circuit which permits full-accuracy performance on a single +5 V to +15 V power supply. Thin-film silicon-chromium resistors provide the stability required for guaranteed monotonic operation over the entire operating temperature range (all grades), while recent advances in laser-wafer-trimming of these thin-film resistors permit absolute calibration at the factory to within ±1 LSB; thus no user-trims for gain or offset are required. A new circuit design provides voltage settling to ±1/2 LSB for a full-scale step in 800 ns.

The AD558 is available in four performance grades. The AD558J and K are specified for use over the 0°C to +70°C temperature range, while the AD558S and T grades are specified for –55°C to +125°C operation. The "J" and "K" grades are available either in 16-pin plastic (N) or hermetic ceramic (D) DIPS. They are also available in 20-pin JEDEC standard PLCC packages. The "S" and "T" grades are available in the 16-pin hermetic ceramic DIP package.

DACPORT is a registered trademark of Analog Devices, Inc.

REV. A

Information furnished by Analog Devices is believed to be accurate and reliable. However, no responsibility is assumed by Analog Devices for its use, nor for any infringements of patents or other rights of third parties which may result from its use. No license is granted by implication or otherwise under any patent or patent rights of Analog Devices.

PRODUCT HIGHLIGHTS

1. The 8-bit I^2L input register and fully microprocessor-compatible control logic allow the AD558 to be directly connected to 8- or 16-bit data buses and operated with standard control signals. The latch may be disabled for direct DAC interfacing.
2. The laser-trimmed on-chip SiCr thin-film resistors are calibrated for absolute accuracy and linearity at the factory. Therefore, no user trims are necessary for full rated accuracy over the operating temperature range.
3. The inclusion of a precision low voltage bandgap reference eliminates the need to specify and apply a separate reference source.
4. The voltage switching structure of the AD558 DAC section along with a high speed output amplifier and laser trimmed resistors give the user a choice of 0 V to +2.56 V or 0 V to +10 V output ranges, selectable by pin-strapping. Circuitry is internally compensated for minimum settling time on both ranges; typically settling to ±1/2 LSB for a full-scale 2.55 volt step in 800 ns.
5. The AD558 is designed and specified to operate from a single +4.5 V to +16.5 V power supply.
6. Low digital input currents, 100 μA max, minimize bus loading. Input thresholds are TTL/low voltage CMOS compatible over the entire operating V_{CC} range.
7. All AD558 grades are available in chip form with guaranteed specifications from +25°C to T_{MAX}. MIL-STD-883, Class B visual inspection is standard on Analog Devices bipolar chips. Contact the factory for additional chip information.
8. The AD558 is available in versions compliant with MIL-STD-883. Refer to Analog Devices Military Products Databook or current AD558/883B data sheet for detailed specifications.

One Technology Way, P.O. Box 9106, Norwood, MA 02062-9106, U.S.A.
Tel: 617/329-4700 **Fax: 617/326-8703**

AD558—SPECIFICATIONS (@ T_A = +25°C, V_{CC} = +5 V to +15 V unless otherwise noted)

Model	AD558J			AD558K			AD558S[1]			AD558T[1]			
	Min	Typ	Max	Min	Typ	Max	Min	Typ	Max	Min	Typ	Max	Units
RESOLUTION			8			8			8			8	Bits
RELATIVE ACCURACY[2]													
0°C to +70°C			±1/2			±1/4			±1/2			±1/4	LSB
–55°C to +125°C									±3/4			±3/8	LSB
OUTPUT													
Ranges[3]		0 to +2.56			0 to +2.56			0 to +2.56			0 to +2.56		V
		0 to +10			0 to +10			0 to +10			0 to +10		V
Current Source	+5			+5			+5			+5			mA
Sink		Internal Passive Pull-Down to Ground[4]			Internal Passive Pull-Down to Ground			Internal Passive Pull-Down to Ground			Internal Passive Pull-Down to Ground		
OUTPUT SETTLING TIME[5]													
0 to 2.56 Volt Range		0.8	1.5		0.8	1.5		0.8	1.5		0.8	1.5	µs
0 to 10 Volt Range[4]		2.0	3.0		2.0	3.0		2.0	3.0		2.0	3.0	µs
FULL-SCALE ACCURACY[6]													
@ 25°C			**±1.5**			**±0.5**			**±1.5**			**±0.5**	LSB
T_{MIN} to T_{MAX}			**±2.5**			**±1**			**±2.5**			**±1**	LSB
ZERO ERROR													
@ 25°C			**±1**			**±1/2**			**±1**			**±1/2**	LSB
T_{MIN} to T_{MAX}			**±2**			**±1**			**±2**			**±1**	LSB
MONOTONICITY[7]													
T_{MIN} to T_{MAX}		**Guaranteed**			**Guaranteed**			**Guaranteed**			**Guaranteed**		
DIGITAL INPUTS													
T_{MIN} to T_{MAX}													
Input Current			**±100**			**±100**			**±100**			**100**	µA
Data Inputs, Voltage													
Bit On-Logic "1"	2.0			2.0			2.0			2.0			V
Bit On-Logic "0"	0		0.8	0			0			0			V
Control Inputs, Voltage													
On-Logic "1"	2.0			2.0			2.0			2.0			V
On-Logic "0"	0		0.8	0		0.8	0		0.8	0		0.8	V
Input Capacitance		4			4			4			4		pF
TIMING[8]													
t_W, Strobe Pulse Width	200			200			200			200			ns
T_{MIN} to T_{MAX}	**270**			**270**			**270**			**270**			ns
t_{DH} Data Hold Time	10			10			10			10			ns
T_{MIN} to T_{MAX}	**10**			**10**			**10**			**10**			ns
t_{DS} Data Set-Up Time	200			200			200			200			ns
T_{MIN} to T_{MAX}	**270**			**270**			**270**			**270**			ns
POWER SUPPLY													
Operating Voltage Range (V_{CC})													
2.56 Volt Range	**+4.5**		**+16.5**	**+4.5**		**+16.5**	**+4.5**		**+16.5**	**+4.5**		**+16.5**	V
10 Volt Range	**+11.4**		**+16.5**	**+11.4**		**+16.5**	**+11.4**		**+16.5**	**+11.4**		**+16.5**	V
Current (I_{CC})		15	**25**		15	**25**		15	**25**		15	**25**	mA
Rejection Ratio			**0.03**			**0.03**			**0.03**			**0.03**	%/%
POWER DISSIPATION, V_{CC} = 5 V		75	125		75	125		75	125		75	125	mW
V_{CC} = 15 V		225	375		225	375		225	375		225	375	mW
OPERATING TEMPERATURE RANGE	0		+70	0		+70	–55		+125	–55		+125	°C

NOTES

[1]The AD558 S & T grades are available processed and screened lo MIL-STD-883 Class B. Consult Analog Devices' Military Databook for details.

[2]Relative Accuracy is defined as the deviation of the code transition points from the ideal transfer point on a straight line from the offset to the full scale of the device. See "Measuring Offset Error".

[3]Operation of the 0 volt to 10 volt output range requires a minimum supply voltage of +11.4 volts.

[4]Passive pull-down resistance is 2 kΩ for 2.56 volt range, 10 kΩ for 10 volt range.

[5]Settling time is specified for a positive-going full-scale step to ±1/2 LSB. Negative-going steps to zero are slower, but can be improved with an external pull-down.

[6]The full range output voltage for the 2.56 range is 2.55 V and is guaranteed with a +5 V supply, for the 10 V range, it is 9.960 V guaranteed with a +15 V supply.

[7]A monotonic converter has a maximum differential linearity error of ±1 LSB.

[8]See Figure 7.

Specifications shown in **boldface** are tested on all production units at final electrical test.

Specifications subject to change without notice.

ABSOLUTE MAXIMUM RATINGS*

V_{CC} to Ground . . . . . 0 V to +18 V
Digital Inputs (Pins 1–10) . . . . . 0 V to +7.0 V
V_{OUT} . . . . . Indefinite Short to Ground
Momentary Short to V_{CC}
Power Dissipation . . . . . 450 mW
Storage Temperature Range
N/P (Plastic) Packages . . . . . –25°C to +100°C
D (Ceramic) Package . . . . . –55°C to +150°C
Lead Temperature (soldering, 10 sec) . . . . . +300°C
Thermal Resistance
Junction to Ambient/Junction to Case
D (Ceramic) Package . . . . . 100°C/W/30°C/W
N/P (Plastic) Packages . . . . . 140°C/W/55°C/W

*Stresses greater than those listed under "Absolute Maximum Ratings" may cause permanent damage to the device. This is a stress rating only and functional operation of the device at these or any other conditions above those indicated in the operational section of this specification is not implied. Exposure to absolute maximum rating conditions for extended periods may affect device reliability.

AD558 METALIZATION PHOTOGRAPH

Dimensions shown in inches and (mm).

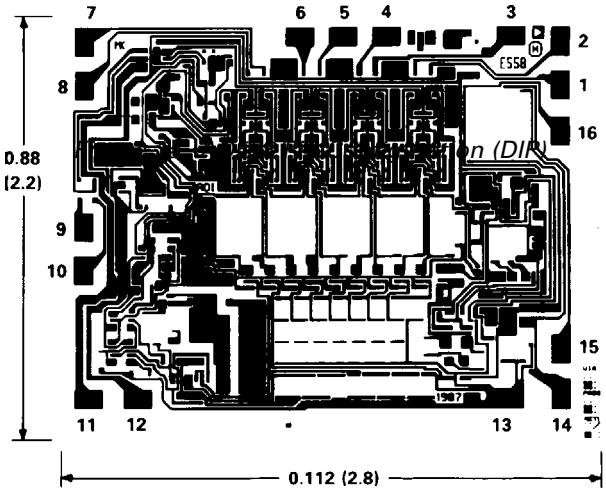

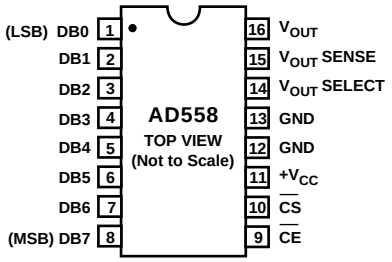

Figure 1a. AD558 Pin Configuration (DIP)

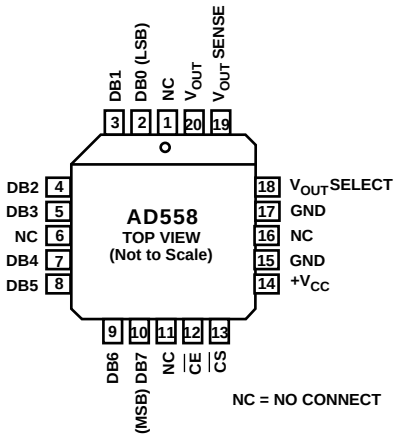

Figure 1b. AD558 Pin Configuration (PLCC and LCC)

ORDERING GUIDE

Model[1]	Temperature	Relative Accuracy Error Max T_{MIN} to T_{MAX}	Full-Scale Error, Max T_{MIN} to T_{MAX}	Package Option[2]
AD558JN	0°C to +70°C	±1/2 LSB	±2.5 LSB	Plastic (N-16)
AD558JP	0°C to +70°C	±1/2 LSB	±2.5 LSB	PLCC (P-20A)
AD558JD	0°C to +70°C	±1/2 LSB	±2.5 LSB	TO-116 (D-16)
AD558KN	0°C to +70°C	±1/4 LSB	±1 LSB	Plastic (N-16)
AD558KP	0°C to +70°C	±1/4 LSB	±1 LSB	PLCC (P-20A)
AD558KD	0°C to +70°C	±1/4 LSB	±1 LSB	TO-116 (D-16)
AD558SD	–55°C to +125°C	±3/4 LSB	±2.5 LSB	TO-116 (D-16)
AD558TD	–55°C to +125°C	±3/8 LSB	±1 LSB	TO-116 (D-16)

NOTES
[1]For details on grade and package offerings screened in accordance with MIL-STD-883, refer to the Analog Devices Military Products Databook or current AD558/883B data sheet.
[2]D = Ceramic DIP; N = Plastic DIP; P = Plastic Leaded Chip Carrier.

CIRCUIT DESCRIPTION

The AD558 consists of four major functional blocks, fabricated on a single monolithic chip (see Figure 2). The main D-to-A converter section uses eight equally-weighted laser-trimmed current sources switched into a silicon-chromium thin-film R/2R resistor ladder network to give a direct but unbuffered 0 mV to 400 mV output range. The transistors that form the DAC switches are PNPs; this allows direct positive-voltage logic interface and a zero-based output range.

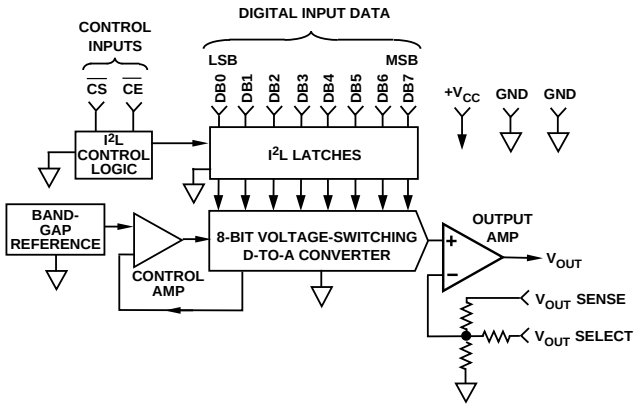

Figure 2. AD558 Functional Block Diagram

The high speed output buffer amplifier is operated in the non-inverting mode with gain determined by the user-connections at the output range select pin. The gain-setting application resistors are thin-film laser-trimmed to match and track the DAC resistors and to assure precise initial calibration of the two output ranges, 0 V to 2.56 V and 0 V to 10 V. The amplifier output stage is an NPN transistor with passive pull-down for zero-based output capability with a single power supply. The internal precision voltage reference is of the patented bandgap type. This design produces a reference voltage of 1.2 volts and thus, unlike 6.3 volt temperature compensated Zeners, may be operated from a single, low voltage logic power supply. The microprocessor interface logic consists of an 8-bit data latch and control circuitry. Low power, small geometry and high speed are advantages of the I^2L design as applied to this section. I^2L is bipolar process compatible so that the performance of the analog sections need not be compromised to provide on-chip logic capabilities. The control logic allows the latches to be operated from a decoded microprocessor address and write signal. If the application does not involve a µP or data bus, wiring CS and CE to ground renders the latches "transparent" for direct DAC access.

MIL-STD-883

The rigors of the military/aerospace environment, temperature extremes, humidity, mechanical stress, etc., demand the utmost in electronic circuits. The AD558, with the inherent reliability of integrated circuit construction, was designed with these applications in mind. The hermetically-sealed, low profile DIP package takes up a fraction of the space required by equivalent modular designs and protects the chip from hazardous environments. To further ensure reliability, military temperature range AD558 grades S and T are available screened to MIL-STD-883. For more complete data sheet information consult the Analog Devices' Military Databook.

CHIP AVAILABILITY

The AD558 is available in laser-trimmed, passivated chip form. AD558J and AD558T chips are available. Consult the factory for details.

Input Logic Coding

Digital Input Code			Output Voltage	
Binary	**Hexadecimal**	**Decimal**	**2.56 V Range**	**10.000 V Range**
0000 0000	00	0	0	0
0000 0001	01	1	0.010 V	0.039 V
0000 0010	02	2	0.020 V	0.078 V
0000 1111	0F	15	0.150 V	0.586 V
0001 0000	10	16	0.160 V	0.625 V
0111 1111	7F	127	1.270 V	4.961 V
1000 0000	80	128	1.280 V	5.000 V
1100 0000	C0	192	1.920 V	7.500 V
1111 1111	FF	255	2.55 V	9.961 V

CONNECTING THE AD558

The AD558 has been configured for ease of application. All reference, output amplifier and logic connections are made internally. In addition, all calibration trims are performed at the factory assuring specified accuracy without user trims. The only connection decision that must be made by the user is a single jumper to select output voltage range. Clean circuit board layout is facilitated by isolating all digital bit inputs on one side of the package; analog outputs are on the opposite side.

Figure 3 shows the two alternative output range connections. The 0 V to 2.56 V range may be selected for use with any power supply between +4.5 V and +16.5 V. The 0 V to 10 V range requires a power supply of +11.4 V to +16.5 V.

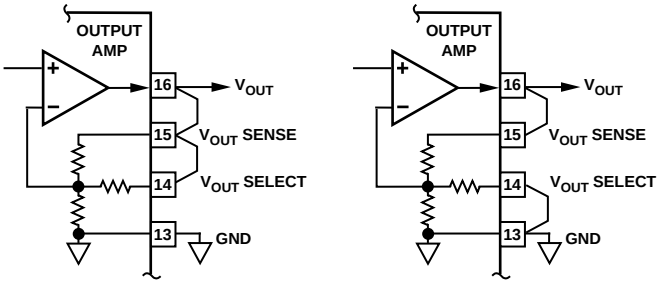

a. 0 V to 2.56 V Output Range b. 0 V to 10 V Output Range
Figure 3. Connection Diagrams

Because of its precise factory calibration, the AD558 is intended to be operated without user trims for gain and offset; therefore no provisions have been made for such user trims. If a small increase in scale is required, however, it may be accomplished by slightly altering the effective gain of the output buffer. A resistor in series with V_{OUT} SENSE will increase the output range.

For example if a 0 V to 10.24 V output range is desired (40 mV = 1 LSB), a nominal resistance of 850 Ω is required. It must be remembered that, although the internal resistors all ratio-match and track, the *absolute* tolerance of these resistors is typically ±20% and the *absolute* TC is typically –50 ppm/°C (0 to –100 ppm/°C). That must be considered when rescaling is performed. Figure 4 shows the recommended circuitry for a full-scale output range of 10.24 volts. Internal resistance values shown are nominal.

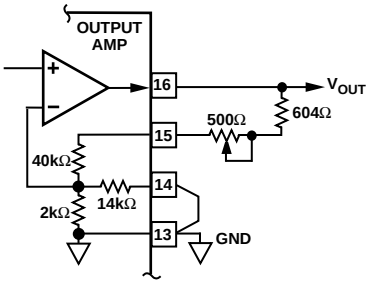

Figure 4. 10.24 V Full-Scale Connection

NOTE: Decreasing the scale by putting a resistor in series with GND will not work properly due to the code-dependent currents in GND. Adjusting offset by injecting dc at GND is not recommended for the same reason.

GROUNDING AND BYPASSING*

All precision converter products require careful application of good grounding practices to maintain full rated performance. Because the AD558 is intended for application in microcomputer systems where digital noise is prevalent, special care must be taken to assure that its inherent precision is realized.

The AD558 has two ground (common) pins; this minimizes ground drops and noise in the analog signal path. Figure 5 shows how the ground connections should be made.

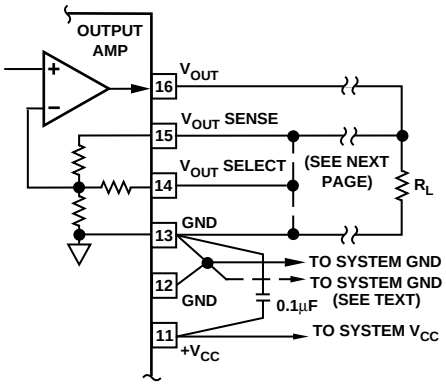

Figure 5. Recommended Grounding and Bypassing

It is often advisable to maintain separate analog and digital grounds throughout a complete system, tying them common in one place only. If the common tie-point is remote and accidental disconnection of that one common tie-point occurs due to card removal with power on, a large differential voltage between the two commons could develop. To protect devices that interface to both digital and analog parts of the system, such as the AD558, it is recommended that common ground tie-points should be provided at *each* such device. If only one system ground can be connected directly to the AD558, it is recommended that analog common be selected.

POWER SUPPLY CONSIDERATIONS

The AD558 is designed to operate from a single positive power supply voltage. Specified performance is achieved for any supply voltage between +4.5 V and +16.5 V. This makes the AD558 ideal for battery-operated, portable, automotive or digital mainframe applications.

*For additional insight, "An IC Amplifier Users' Guide to Decoupling, Grounding and Making Things Go Right For A change," is available at no charge from any Analog Devices Sales Office.

The only consideration in selecting a supply voltage is that, in order to be able to use the 0 V to 10 V output range, the power supply voltage must be between +11.4 V and +16.5 V. If, however, the 0 V to 2.56 V range is to be used, power consumption will be minimized by utilizing the lowest available supply voltage (above +4.5 V).

TIMING AND CONTROL

The AD558 has data input latches that simplify interface to 8- and 16-bit data buses. These latches are controlled by Chip Enable ($\overline{CE}$) and Chip Select ($\overline{CS}$) inputs. $\overline{CE}$ and $\overline{CS}$ are internally "NORed" so that the latches transmit input data to the DAC section when both $\overline{CE}$ and $\overline{CS}$ are at Logic "0". If the application does not involve a data bus, a "00" condition allows for direct operation of the DAC. When either $\overline{CE}$ or $\overline{CS}$ go to Logic "1", the input data is latched into the registers and held until both $\overline{CE}$ and $\overline{CS}$ return to "0". (Unused $\overline{CE}$ or $\overline{CS}$ inputs should be tied to ground.) The truth table is given in Table I. The logic function is also shown in Figure 6.

Table I. AD558 Control Logic Truth Table

Input Data	$\overline{CE}$	$\overline{CS}$	DAC Data	Latch Condition
0	0	0	0	"Transparent"
1	0	0	1	"Transparent"
0	g	0	0	Latching
1	g	0	1	Latching
0	0	g	0	Latching
1	0	g	1	Latching
X	1	X	Previous Data	Latched
X	X	1	Previous Data	Latched

NOTES
X = Does not matter.
g = Logic Threshold at Positive-Going Transition.

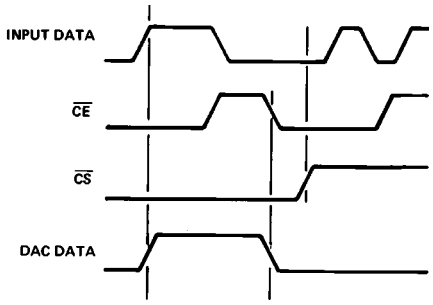

Figure 6. AD558 Control Logic Function

In a level-triggered latch such as that in the AD558 there is an interaction between data setup and hold times and the width of the enable pulse. In an effort to reduce the time required to test all possible combinations in production, the AD558 is tested with $t_{DS} = t_W = 200$ ns at 25°C and 270 ns at T_{MIN} and T_{MAX}, with $t_{DH} = 10$ ns at all temperatures. Failure to comply with these specifications may result in data not being latched properly.

Figure 7 shows the timing for the data and control signals; $\overline{CE}$ and $\overline{CS}$ are identical in timing as well as in function.

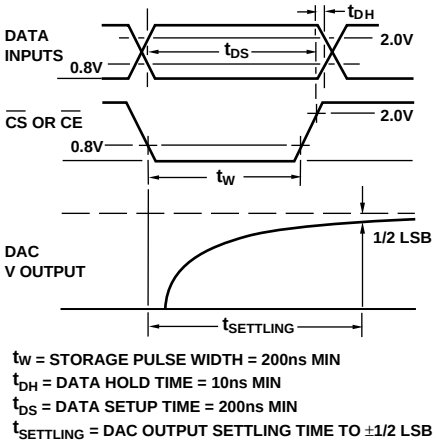

Figure 7. AD558 Timing

USE OF V_{OUT} SENSE

Separate access to the feedback resistor of the output amplifier allows additional application versatility. Figure 8a shows how I × R drops in long lines to remote loads may be cancelled by putting the drops "inside the loop." Figure 8b shows how the separate sense may be used to provide a higher output current by feeding back around a simple current booster.

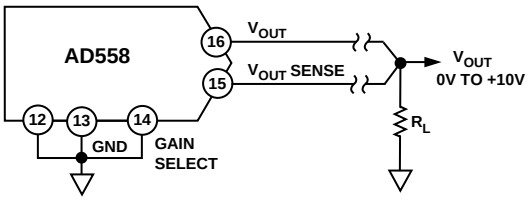

a. Compensation for I × R Drops in Output Lines

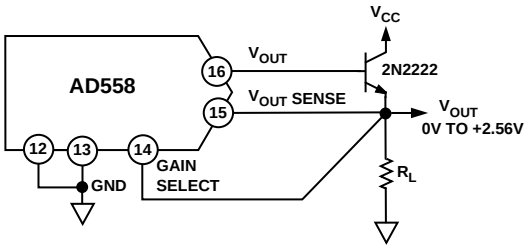

b. Output Current Booster
Figure 8. Use of V_{OUT} Sense

OPTIMIZING SETTLING TIME

In order to provide single-supply operation and zero-based output voltage ranges, the AD558 output stage has a passive "pull-down" to ground. As a result, settling time for negative going output steps may be longer than for positive-going output steps. The relative difference depends on load resistance and capacitance. If a negative power supply is available, the negative-going settling time may be improved by adding a pull-down resistor from the output to the negative supply as shown in Figure 9. The value of the resistor should be such that, at zero voltage out, current through that resistor is 0.5 mA max.

BIPOLAR OUTPUT RANGES

The AD558 was designed for operation from a single power supply and is thus capable of providing only unipolar (0 V to +2.56 V and 0 V to 10 V) output ranges. If a negative supply is

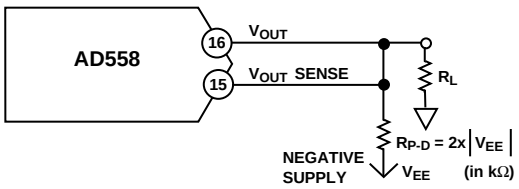

Figure 9. Improved Settling Time

available, bipolar output ranges may be achieved by suitable output offsetting and scaling. Figure 10 shows how a ±1.28 volt output range may be achieved when a –5 volt power supply is available. The offset is provided by the AD589 precision 1.2 volt reference which will operate from a +5 volt supply. The AD544 output amplifier can provide the necessary ±1.28 volt output swing from ±5 volt supplies. Coding is complementary offset binary.

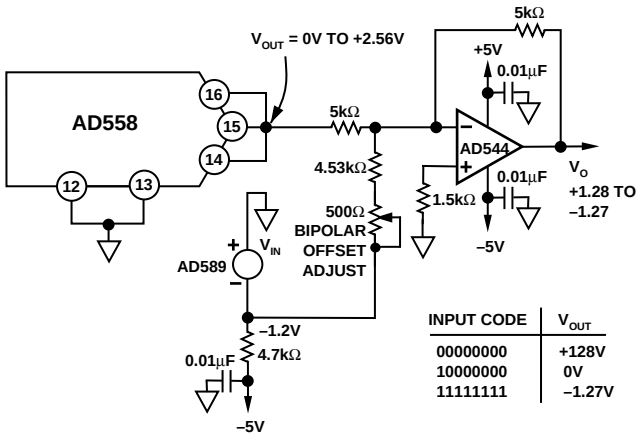

INPUT CODE	V_{OUT}
00000000	+128V
10000000	0V
11111111	–1.27V

Figure 10. Bipolar Operation of AD558 from ±5 V Supplies

MEASURING OFFSET ERROR

One of the most commonly specified endpoint errors associated with real-world nonideal DACs is offset error.

In most DAC testing, the offset error is measured by applying the zero-scale code and measuring the output deviation from 0 volts. There are some DACs, like the AD558 where offset errors may be present but not observable at the zero scale, because of other circuit limitations (such as zero coinciding with single-supply ground) so that a nonzero output at zero code cannot be read as the offset error. Factors like this make testing the AD558 a little more complicated.

By adding a pulldown resistor from the output to a negative supply as shown in Figure 11, we can now read offset errors at zero code that may not have been observable due to circuit limitations. The value of the resistor should be such that, at zero voltage out, current through the resistor is 0.5 mA max.

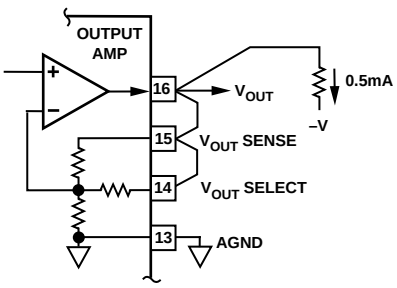

a. 0 V to 2.56 V Output Range

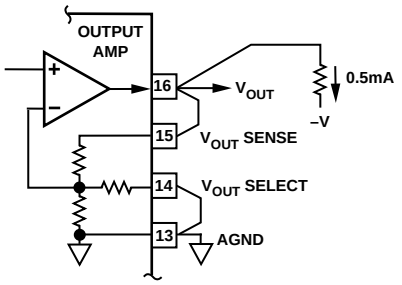

b. 0 V to 10 V Output Range
Figure 11. Offset Connection Diagrams

INTERFACING THE AD558 TO MICROPROCESSOR DATA BUSES

The AD558 is configured to act like a "write only" location in memory that may be made to coincide with a read only memory location or with a RAM location. The latter case allows data previously written into the DAC to be read back later via the RAM. Address decoding is partially complete for either ROM or RAM. Figure 12 shows interfaces for three popular microprocessor systems.

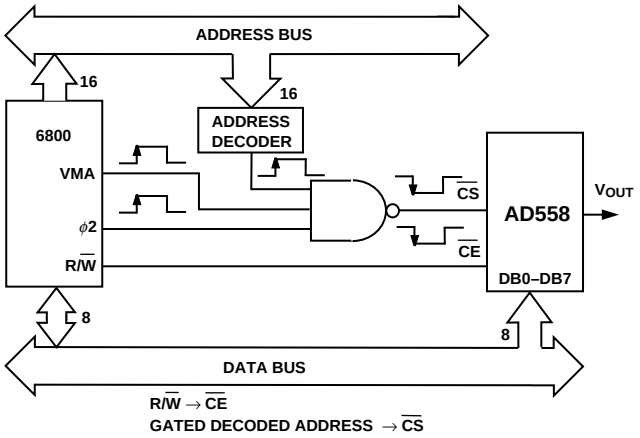

a. 6800/AD558 Interface

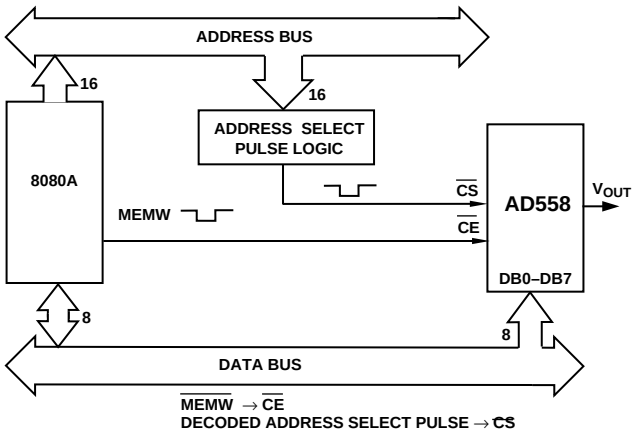

b. 8080A/AD558 Interface

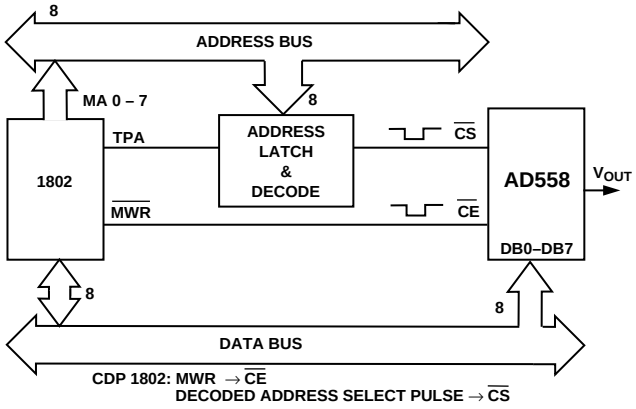

c. 1802/AD558 Interface
Figure 12. Interfacing the AD558 to Microprocessors

Performance (typical @ +25°C, V_{CC} ± +5 V to +15 V unless otherwise noted)

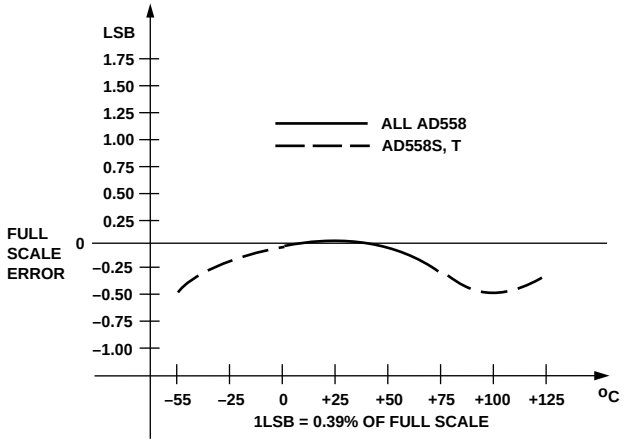

Figure 13. Full-Scale Accuracy vs. Temperature Performance of AD558

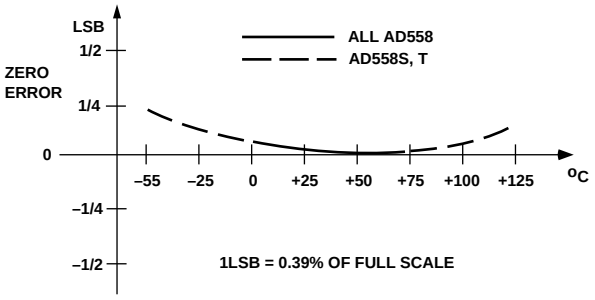

Figure 14. Zero Drift vs. Temperature Performance of AD558

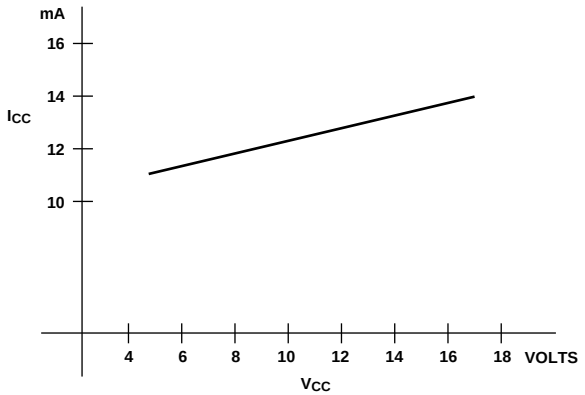

Figure 15. Quiescent Current vs. Power Supply Voltage for AD558

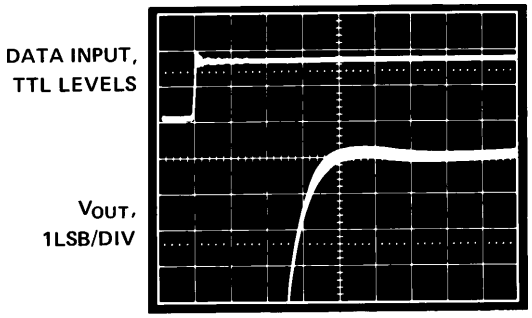

Figure 16. AD558 Settling Characteristics Detail 0 V to 2.56 V Output Range Full-Scale Step

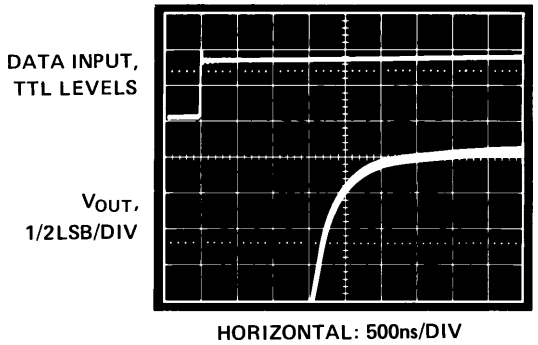

Figure 17. AD558 Settling Characteristic Detail 0 V to 10 V Output Range Full-Scale Step

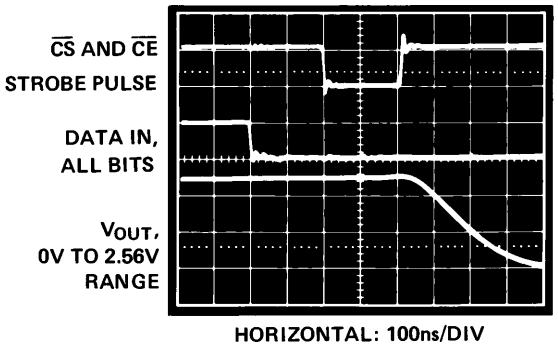

Figure 18. AD558 Logic Timing

OUTLINE DIMENSIONS

Dimensions shown in inches and (mm).

N (Plastic) Package

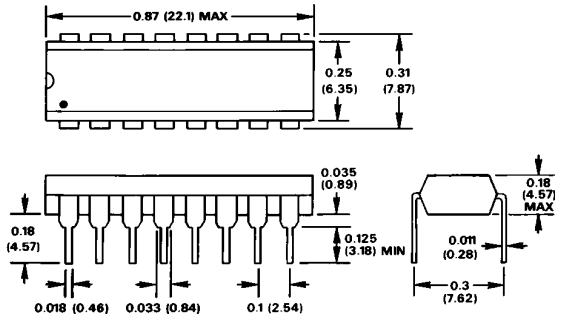

D (Ceramic) Package

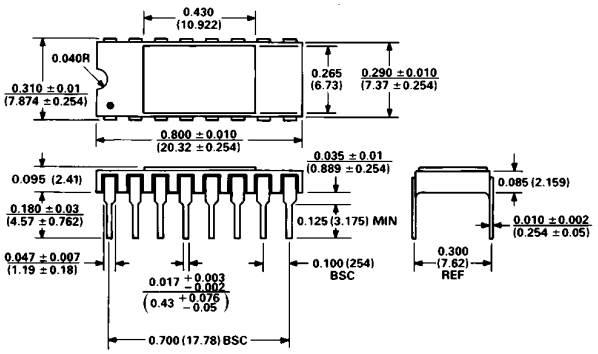

P (PLCC) Package

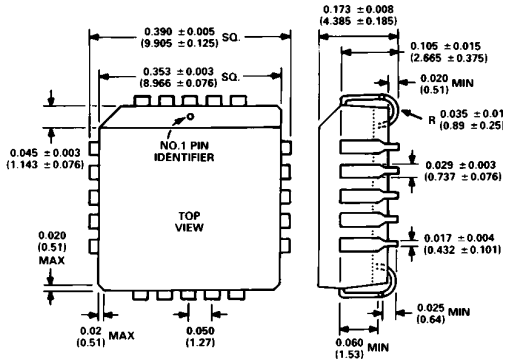

C558f–21–8/87

PRINTED IN U.S.A.

Компания «ЭлектроПласт» предлагает заключение долгосрочных отношений при поставках импортных электронных компонентов на взаимовыгодных условиях!

Наши преимущества:

- Оперативные поставки широкого спектра электронных компонентов отечественного и импортного производства напрямую от производителей и с крупнейших мировых складов;
- Поставка более 17-ти миллионов наименований электронных компонентов;
- Поставка сложных, дефицитных, либо снятых с производства позиций;
- Оперативные сроки поставки под заказ (от 5 рабочих дней);
- Экспресс доставка в любую точку России;
- Техническая поддержка проекта, помощь в подборе аналогов, поставка прототипов;
- Система менеджмента качества сертифицирована по Международному стандарту ISO 9001;
- Лицензия ФСБ на осуществление работ с использованием сведений, составляющих государственную тайну;
- Поставка специализированных компонентов (Xilinx, Altera, Analog Devices, Intersil, Interpoint, Microsemi, Aeroflex, Peregrine, Syfer, Eurofarad, Texas Instrument, Miteq, Cobham, E2V, MA-COM, Hittite, Mini-Circuits,General Dynamics и др.);

Помимо этого, одним из направлений компании «ЭлектроПласт» является направление «Источники питания». Мы предлагаем Вам помощь Конструкторского отдела:

- Подбор оптимального решения, техническое обоснование при выборе компонента;
- Подбор аналогов;
- Консультации по применению компонента;
- Поставка образцов и прототипов;
- Техническая поддержка проекта;
- Защита от снятия компонента с производства.

Как с нами связаться

Телефон: 8 (812) 309 58 32 (многоканальный)
Факс: 8 (812) 320-02-42
Электронная почта: org@eplast1.ru
Адрес: 198099, г. Санкт-Петербург, ул. Калинина, дом 2, корпус 4, литера А.