SCH3227/SCH3226/SCH3224/SCH3222

LPC IO with 8042 KBC, Reset Generation, HWM and Multiple Serial Ports

Product Features

- General Features
  - 3.3 Volt Operation (SIO Block is 5 Volt Tolerant)
  - Programmable Wake-up Event (PME) Interface
  - PC99, PC2001 Compliant
  - ACPI 2.0 Compliant
  - Serial IRQ Interface Compatible with Serialized IRQ Support for PCI Systems
  - ISA Plug-and-Play Compatible Register Set
  - Four Address Options for Power On Configuration Port
  - System Management Interrupt (SMI)
  - General Purpose I/O pins: 23 to 40
  - GPIOs with VID compatible inputs: 0 to 6
  - Support for power button on PS/2 Keyboard
  - Security Key Register (32 byte) for Device Authentication
- Low Pin Count Bus (LPC) Interface
  - Supports Bus frequencies of 19MHz to 33MHz
- Watchdog Timer
- Resume and Main Power Good Generator
- Programmable Clock Output to 16 Hz
- Keyboard Controller
  - 8042 Software Compatible
  - 8 Bit Microcomputer
  - 2k Bytes of Program ROM
  - 256 Bytes of Data RAM
  - Four Open Drain Outputs Dedicated for Keyboard/Mouse Interface
  - Asynchronous Access to Two Data Registers and One Status Register
  - Supports Interrupt and Polling Access
  - 8 Bit Counter Timer
  - Port 92 Support
  - Fast Gate A20 and KRESET Outputs
  - Phoenix Keyboard BIOS ROM
- Multiple Serial Ports
  - 4 Full Function Serial Ports (SCH3227, SCH3226, SCH3222)
  - 2 Full Function Serial Ports (SCH3224)
  - Two additional 4-pin Serial Ports available by strap option (SCH3227, SCH3226)
  - Two additional 4-pin Serial Ports available always (SCH3224, SCH3222)
  - High Speed NS16C550A Compatible UARTs with Send/Receive 16-Byte FIFOs
  - Supports 230k, 460k, 921k and 1.5M Baud
  - Programmable Baud Rate Generator
  - Modem Control Circuitry
  - 480 Address and 15 IRQ Options
  - Support IRQ Sharing among serial ports
  - RS485 Auto Direction Control Mode
- Infrared Port
  - Multiprotocol Infrared Interface
  - IrDA 1.0 Compliant
  - SHARP ASK IR
  - 480 Addresses, Up to 15 IRQ
- Multi-Mode™ Parallel Port with ChiProtect™
  - Available in SCH3227, SCH3224
  - Standard Mode IBM PC/XT®, PC/AT®, and PS/2™ Compatible Bi-directional ParallelPort
  - Enhanced Parallel Port (EPP) Compatible - EPP 1.7 and EPP 1.9 (IEEE 1284 Compliant)
  - IEEE 1284 Compliant Enhanced Capabilities Port (ECP)
  - ChiProtect Circuitry for Protection
  - 960 Address, Up to 15 IRQ and Four DMA Options
- Hardware Monitor
  - Available in SCH3227, SCH3226, SCH3224
  - Monitor Power supplies (+2.5V, +5V, +12V, Vccp (processor voltage), VCC, Vbat and Vtr.
  - Remote Thermal Diode Sensing for Two External Temperature Measurements accurate to 1.5°C
  - Internal Ambient Temperature Measurement
  - Limit Comparison of all Monitored Values
  - Programmable Automatic FAN control based on temperature
  - nHWM_INT Pin for out-of-limit Temperature or Voltage Indication
  - Thermtrip signal for over temperature indication
- IDE Reset Output and 3 PCI Reset Buffers with Software Control Capability (SCH3227 and SCH3226 by strap option)
- Power Button Control and AC Power Failure Recovery (SCH3227 and SCH3226 by strap option)
- Temperature Ranges Available
  - Industrial (-40°C to +85°C)
  - Commercial (0°C to +70°C)
- WFBGA RoHS Compliant Packages
  - 144-ball (SCH3227)
  - 100-ball (SCH3226, SCH3224)
  - 84-ball (SCH3222)

© 2016-2017 Microchip Technology Inc.

TO OUR VALUED CUSTOMERS

It is our intention to provide our valued customers with the best documentation possible to ensure successful use of your Microchip products. To this end, we will continue to improve our publications to better suit your needs. Our publications will be refined and enhanced as new volumes and updates are introduced.

If you have any questions or comments regarding this publication, please contact the Marketing Communications Department via E-mail at **docerrors@microchip.com**. We welcome your feedback.

Most Current Data Sheet

To obtain the most up-to-date version of this data sheet, please register at our Worldwide Web site at:

http://www.microchip.com

You can determine the version of a data sheet by examining its literature number found on the bottom outside corner of any page. The last character of the literature number is the version number, (e.g., DS30000000A is version A of document DS30000000).

Errata

An errata sheet, describing minor operational differences from the data sheet and recommended workarounds, may exist for current devices. As device/documentation issues become known to us, we will publish an errata sheet. The errata will specify the revision of silicon and revision of document to which it applies.

To determine if an errata sheet exists for a particular device, please check with one of the following:

- Microchip's Worldwide Web site; http://www.microchip.com
- Your local Microchip sales office (see last page)

When contacting a sales office, please specify which device, revision of silicon and data sheet (include -literature number) you are using.

Customer Notification System

Register on our web site at **www.microchip.com** to receive the most current information on all of our products.

© 2016-2017 Microchip Technology Inc.

Table of Contents

1.0 General Description 4
2.0 Pin Layouts 7
3.0 Block Diagram 31
4.0 Power Functionality 32
5.0 LPC Interface 35
6.0 Serial Port (UART) 37
7.0 Parallel Port 56
8.0 Power Management 73
9.0 Serial IRQ 74
10.0 8042 Keyboard Controller Description 77
11.0 General Purpose I/O (GPIO) 86
12.0 System Management Interrupt (SMI) 93
13.0 PME Support 94
14.0 Watchdog Timer 99
15.0 Programmable Clock Output 100
16.0 Reset Generation 101
17.0 Buffered PCI Outputs 104
18.0 Power Control Features 106
19.0 Low Battery Detection Logic 119
20.0 Battery Backed Security Key Register 121
21.0 Temperature Monitoring and Fan Control 123
22.0 Hardware Monitoring Register Set 157
23.0 Configuration Registers 194
24.0 Runtime Register 213
25.0 Valid Power Modes 251
26.0 Operational Description 252
27.0 Timing Diagrams 260
28.0 Package Outlines 281
Appendix A: ADC Voltage Conversion 284
Appendix B: Example Fan Circuits 285
Appendix C: Test Mode 288
Appendix D: Data Sheet Revision History 291
Product Identification System 292
The Microchip Web Site 293
Customer Change Notification Service 293
Customer Support 293

1.0 GENERAL DESCRIPTION

The SCH3227/SCH3226/SCH3224/SCH3222 Product Family is a 3.3V (Super I/O Block is 5V tolerant) PC99/PC2001 compliant Super I/O controller with an LPC interface. The Product Family also includes Hardware Monitoring capabilities, enhanced Security features, Power Control logic and Motherboard Glue logic.

1.1 Scope and Definitions

For the purposes of this document, the term “SCH322x Family” refers only to the parts numbered SCH3227, SCH3226, SCH3224 and SCH3222. Similarly-numbered parts may also exist, but they are outside the scope of this document.

1.2 Important New Usage Considerations

The SCH322x Family is the next generation of the SCH311x family components. They mainly differ in the number of pins brought out of the package. In some cases (SCH3227, SCH3226) a new pin called STRAPOPT is brought out, allowing a hard-wired selection between the legacy SCH3114 vs. SCH3116 features of 8 of the pins. This selection also affects the Device ID register, which will display the legacy SCH3114 or SCH3116 code. Other SCH322x members, which do not have a STRAPOPT pin, are hard-wired internally to identify themselves as the legacy SCH3116.

CAUTION: This device contains circuits and registers affecting pin functions which must not be used when they are not brought out of the package. These pins are pulled to known states internally. Any features, especially Logical Devices and GPIOs, that are not listed in this document for a particular family member must not be activated, accessed, or in any way changed from its default reset state. Doing so may cause unpredictable behavior and/or excessive currents, and therefore may damage the device and/or the system. See Table 2-1 SCH3227, Table 2-2 SCH3226, Table 2-3 SCH3224, or Table 2-4 SCH3222, for the pin features that are brought out.

1.3 Feature Sets

See Table 1-1 on page 5 for features available per family member.

The Product Family is ACPI 1.0/2.0 compatible and therefore supports multiple low power-down modes. It incorporates sophisticated power control circuitry (PCC), which includes support for keyboard.

The Product Family supports the ISA Plug-and-Play Standard register set (Version 1.0a). The I/O Address, hardware IRQ and DMA Channel of each Logical Device may be reprogrammed through the internal configuration registers. There are up to 480 I/O address location options (960 for the Parallel Port), a Serialized IRQ interface, and a choice of three Legacy DMA channel assignments.

Super I/O functionality includes an 8042 based keyboard and mouse controller, one IrDA 1.0 infrared port and multiple serial ports. Some family members (Table 1-1) also provide an IEEE 1284 EPP/ECP compatible parallel port.

The serial ports are fully functional NS16550 compatible UARTs that support data rates up to 1.5 Mbps. There are both 8-pin Serial Ports and 4-pin Serial Ports. The reduced-pin serial ports have selectable input and output controls. The Serial Ports contain programmable direction control, which will automatically drive nRTS when the Output Buffer is loaded, then drive nRTS when the Output Buffer is empty.

Hardware Monitoring capability has programmable, automatic fan control. Three fan tachometer inputs and three pulse width modulator (PWM) fan control outputs are available.

Hardware Monitoring capability also includes temperature, voltage and fan speed monitoring. It has the ability to alert the system to out-of-limit conditions and automatically control the speeds of multiple fans in response. There are four analog inputs for monitoring external voltages of +5V, +2.5V, +12V and Vccp (core processor voltage), as well as internal monitoring of the device’s internal VCC, VTR, and VBAT power supplies. Hardware Monitoring includes support for monitoring two external temperatures via thermal diode inputs and an internal sensor for measuring local ambient temperature. The nHWM_INT pin is implemented to indicate out-of-limit temperature, voltage, and fan speed conditions. Hardware Monitoring features are accessible via the LPC bus, and the same interrupt event reported on the nHWM_INT pin also creates PME wakeup events. A separate THERMTRIP output is available, which generates a pulse output on a programmed over-temperature condition. This can be used to generate a reset or shutdown indication to the system.

The Motherboard Glue logic includes various power management and system logic including generation of nRSMRST, a programmable Clock output, and reset generation. The reset generation includes a watchdog timer which can be used to generate a reset pulse. The width of this pulse is selectable via an external strapping option.

System related functionality, which offers flexibility to the system designer, includes General Purpose I/O control functions, and control of two LED's.

© 2016-2017 Microchip Technology Inc.

TABLE 1-1: DEVICE SPECIFIC SUMMARY

Function	SCH3227	SCH3226	SCH3224	SCH3222
LPC Bus Interface	YES	YES	YES	YES
PnP Config w/ 4 Port Addresses	YES	YES	YES	YES
Serial IRQ and SMI	YES	YES	YES	YES
Keyboard Controller	YES	YES	YES	YES
Watchdog Timer	YES	YES	YES	YES
Parallel Port	YES	NO	YES	NO
Reset Generator	YES	YES	YES	YES
Serial Ports, Full	4	4	2	4
Additional Serial Ports, 4-Pin	2 avail. (by strap option)	2 avail. (by strap option)	2	2
Infrared Port	YES	YES	YES	YES
Programmable Clock Output	YES	YES	YES	YES
IDE / PCI Reset Outputs	By strap option (vs. 4-pin Serial Ports).	By strap option (vs. 4-pin Serial Ports).	NO	NO
Power Button / AC Fail Support	By strap option (vs. 4-pin Serial Ports).	By strap option (vs. 4-pin Serial Ports).	NO	NO
GPIOs	40	40	24	23
GPIO with VID Compatible Inputs	6	6	0	6
Hardware Monitor	YES	YES	YES	NO
WFBGA Package	144-ball	100-ball	100-ball	84-ball

© 2016-2017 Microchip Technology Inc.

1.4 Reference Documents

1. Intel Low Pin Count Specification, Revision 1.0, September 29, 1997
2. PCI Local Bus Specification, Revision 2.2, December 18, 1998
3. Advanced Configuration and Power Interface Specification, Revision 1.0b, February 2, 1999
4. IEEE 1284 Extended Capabilities Port Protocol and ISA Standard, Rev. 1.14, July 14, 1993
5. Hardware Description of the 8042, Intel 8 bit Embedded Controller Handbook
6. Application Note (AN 8-8) “Keyboard and Mouse Wakeup Functionality”, dated 03/23/02

© 2016-2017 Microchip Technology Inc.

2.0 PIN LAYOUTS

2.1 SCH322x Pin Layout Summary

FIGURE 2-1: SCH3227 PIN DIAGRAM

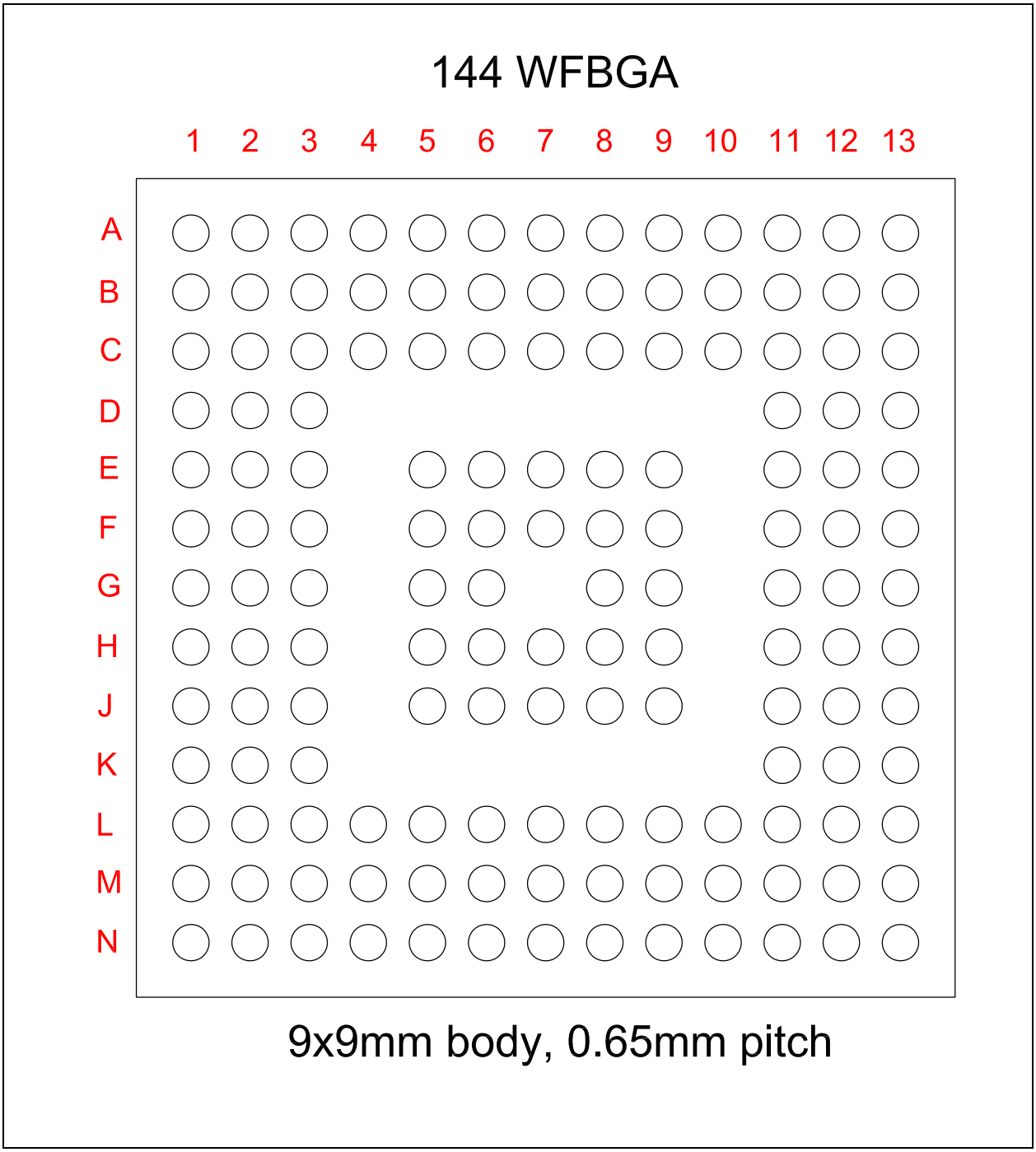

Highlighted rows indicate balls whose function depends on the STRAPOPT strap input.

TABLE 2-1: SCH3227 SUMMARIES BY STRAP OPTION

Ball#	Function: StrapOPT=1	Function: StrapOPT=0
K13	STRAPOPT (=VTR[a])	STRAPOPT (=VSS[a])
M4	RESERVED=VTR[b]	RESERVED=VTR[b]
C3	+12V_IN	+12V_IN
D3	+5V_IN	+5V_IN
E6	GP40	GP40
E3	VTR	VTR
E5	RESERVED=VSS[c]	RESERVED=VSS[c]
F8	TEST=VSS[c]	TEST=VSS[c]
F7	RESERVED=VSS[c]	RESERVED=VSS[c]
F3	VSS	VSS
F6	RESERVED=VSS[c]	RESERVED=VSS[c]
F5	RESERVED=VSS[c]	RESERVED=VSS[c]
G8	RESERVED=VSS[c]	RESERVED=VSS[c]
G6	RESERVED=VSS[c]	RESERVED=VSS[c]
H8	RESERVED=VSS[c]	RESERVED=VSS[c]
G5	RESERVED=VSS[c]	RESERVED=VSS[c]
H7	RESERVED=VSS[c]	RESERVED=VSS[c]
H6	RESERVED=VSS[c]	RESERVED=VSS[c]
H5	RESERVED=VSS[c]	RESERVED=VSS[c]
D2	CLOCKI	CLOCKI
E2	LAD0	LAD0
D1	LAD1	LAD1
E1	LAD2	LAD2
F2	LAD3	LAD3
F1	LFRAME#	LFRAME#
G2	LDRQ#	LDRQ#
H1	PCI_RESET#	PCI_RESET#
G1	PCI_CLK	PCI_CLK
H2	SER_IRQ	SER_IRQ
H3	VSS	VSS
J3	VCC	VCC
J1	GP44 / TXD6	nIDE_RSTDRV / GP44
J2	GP45 / RXD6	nPCIRST1 / GP45
K3	GP46 / nSCIN6	nPCIRST2 / GP46
L3	GP47 / nSCOUT6	nPCIRST3 / GP47
K1	AVSS	AVSS
L1	VBAT	VBAT
K2	GP27 / nIO_SMI / P17	GP27 / nIO_SMI / P17
L2	KDAT / GP21	KDAT / GP21
M1	KCLK / GP22	KCLK / GP22
M2	MDAT / GP32	MDAT / GP32
N1	MCLK / GP33	MCLK / GP33
M3	GP36 / nKBDRST	GP36 / nKBDRST

© 2016-2017 Microchip Technology Inc.

TABLE 2-1: SCH3227 SUMMARIES BY STRAP OPTION (CONTINUED)

Ball#	Function: StrapOPT=1	Function: StrapOPT=0
N2	GP37 / A20M	GP37 / A20M
L5	VSS	VSS
N3	VTR	VTR
N4	nINIT	nINIT
M5	nSLCTIN	nSLCTIN
L6	PD0	PD0
N5	PD1	PD1
M6	PD2	PD2
L7	PD3	PD3
N6	PD4	PD4
M7	PD5	PD5
N7	PD6	PD6
L8	PD7	PD7
L9	VSS	VSS
M8	SLCT	SLCT
N8	PE	PE
N9	BUSY	BUSY
M9	nACK	nACK
N10	nERROR	nERROR
M10	nALF	nALF
N11	nSTROBE	nSTROBE
M11	nRI1	nRI1
N12	nDCD1	nDCD1
L11	RXD1	RXD1
M12	TXD1 / SIOXNOROUT	TXD1 / SIOXNOROUT
N13	nDSR1	nDSR1
L12	nRTS1 / SYSOPT0	nRTS1 / SYSOPT0
M13	nCTS1	nCTS1
J12	nDTR1 / SYSOPT1	nDTR1 / SYSOPT1
K12	GP50 / nRI2	GP50 / nRI2
L13	VTR	VTR
J13	VSS	VSS
H11	GP51 / nDCD2	GP51 / nDCD2
H12	GP52 / RXD2(IRRX2)	GP52 / RXD2(IRRX2)
H13	GP53 / TXD2(IRTX2)	GP53 / TXD2(IRTX2)
G13	GP54 / nDSR2	GP54 / nDSR2
G12	GP55 / nRTS2 / RESGEN	GP55 / nRTS2 / RESGEN
G11	GP56 / nCTS2	GP56 / nCTS2
F13	GP57 / nDTR2	GP57 / nDTR2
F12	RXD5	PB_OUT#
F11	TXD5	PS_ON#
E13	nSCOUT5	PB_IN#
E12	nSCIN5	SLP_SX#
D13	GP10 / RXD3	GP10 / RXD3

© 2016-2017 Microchip Technology Inc.

TABLE 2-1: SCH3227 SUMMARIES BY STRAP OPTION (CONTINUED)

Ball#	Function: StrapOPT=1	Function: StrapOPT=0
D12	GP11 / TXD3	GP11 / TXD3
E11	GP14 / nDSR3	GP14 / nDSR3
C13	GP17 / nRTS3	GP17 / nRTS3
B13	GP16 / nCTS3	GP16 / nCTS3
C12	GP42 / nIO_PME	GP42 / nIO_PME
D11	VTR	VTR
A13	GP15 / nDTR3	GP15 / nDTR3
B12	GP61 / nLED2 / CLKO	GP61 / nLED2 / CLKO
C11	GP60 / nLED1 / WDT	GP60 / nLED1 / WDT
A12	GP13 / nRI3	GP13 / nRI3
B11	GP12 / nDCD3	GP12 / nDCD3
A11	GP31 / nRI4	GP31 / nRI4
C10	GP63 / nDCD4	GP63 / nDCD4
B10	CLKI32	CLKI32
A10	nRSMRST	nRSMRST
B9	VSS	VSS
C9	GP64 / RXD4	GP64 / RXD4
A9	GP65 / TXD4	GP65 / TXD4
A8	GP66 / nDSR4	GP66 / nDSR4
B8	GP67 / nRTS4	GP67 / nRTS4
C8	GP62 / nCTS4	GP62 / nCTS4
A7	GP34 / nDTR4	GP34 / nDTR4
B7	PWRGD_OUT	PWRGD_OUT
A6	PWRGD_PS	PWRGD_PS
C7	nFPRST / GP30	nFPRST / GP30
E8	VTR	VTR
E7	VSS	VSS
B6	nTHERMTRIP	nTHERMTRIP
A5	nHWM_INT	nHWM_INT
C6	PWM3	PWM3
B5	PWM2	PWM2
A4	PWM1	PWM1
B4	FANTACH3	FANTACH3
C5	FANTACH2	FANTACH2
C4	FANTACH1	FANTACH1
A3	HVSS	HVSS
B3	HVTR	HVTR
A2	REMOTE2-	REMOTE2-
A1	REMOTE2+	REMOTE2+
B1	REMOTE1-	REMOTE1-
C1	REMOTE1+	REMOTE1+
C2	VCCP_IN	VCCP_IN

© 2016-2017 Microchip Technology Inc.

TABLE 2-1: SCH3227 SUMMARIES BY STRAP OPTION (CONTINUED)

Ball#	Function: StrapOPT=1	Function: StrapOPT=0
B2	+2.5V_IN	+2.5V_IN
--	RESERVED=N/C[d]: E9, F9, G9, H9, J5, J6, J7, J8, J9, G3, J11, K11, L4, L10	

a. The STRAPOPT connection defines pin functions for this package, and also the contents of the Device ID register at Plug&Play Index 0x20:
When connected to VTR, the table column STRAPOPT=1 applies,
and Device ID = 0x7F.
When connected to VSS, the table column STRAPOPT=0 applies,
and Device ID = 0x7D.

b. For correct operation, this lead must always be connected to VTR.

c. For correct operation and minimal current consumption, this lead must always be connected to VSS.

d. Make No Connection to these leads.

FIGURE 2-2: SCH3226 PIN DIAGRAM

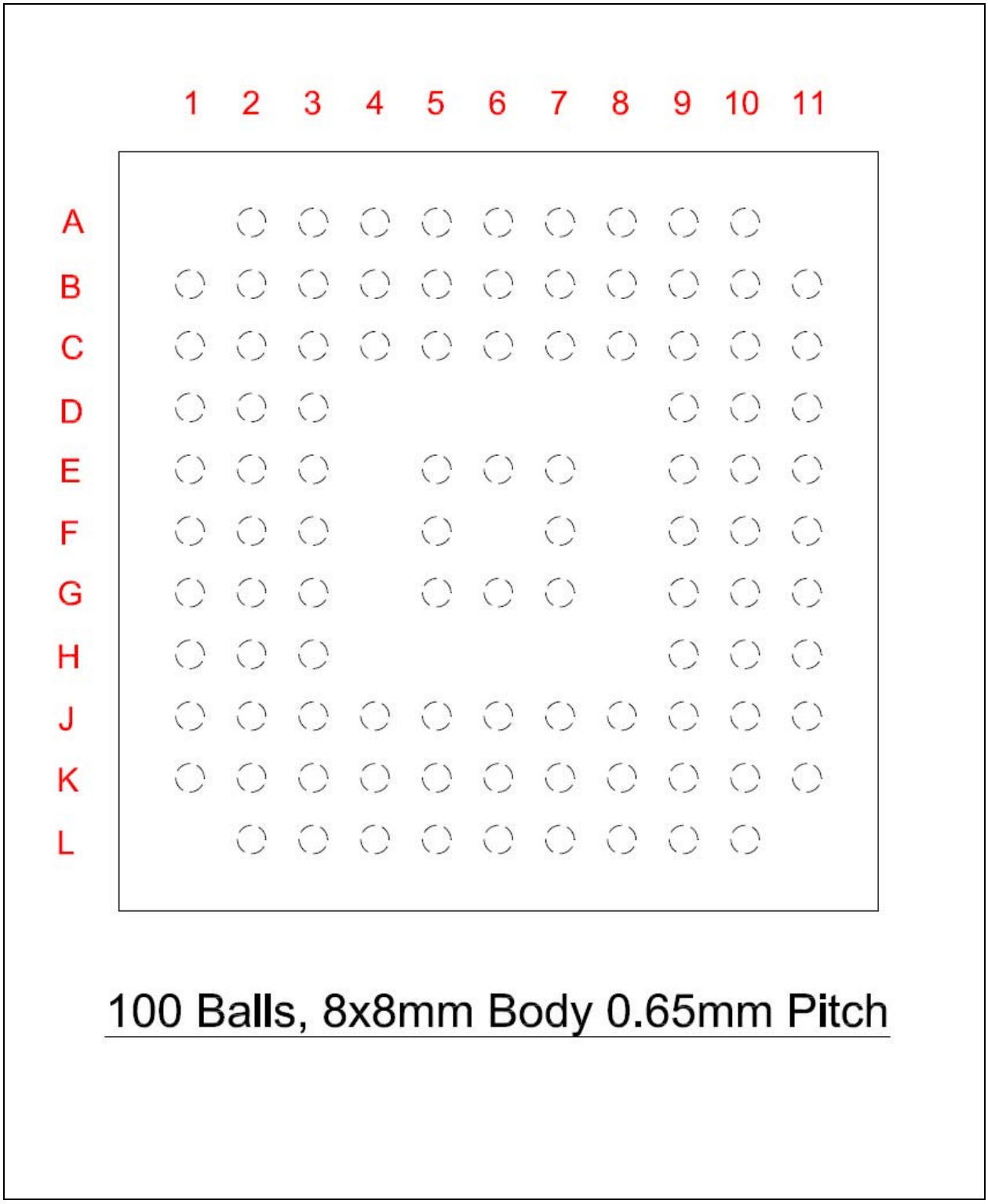

© 2016-2017 Microchip Technology Inc.

Highlighted rows indicate balls whose function depends on the STRAPOPT strap input.

TABLE 2-2: SCH3226 SUMMARIES BY STRAP OPTION

Ball#	Function: StrapOPT=1	Function: StrapOPT=0
L8	STRAPOPT (=VTR[a])	STRAPOPT (=VSS[a])
C2	+12V_IN	+12V_IN
C1	+5V_IN	+5V_IN
C3	GP40 / DRVDEN0(out)	GP40 / DRVDEN0(out)
D3	VTR	VTR
G5	TEST=VSS[b]	TEST=VSS[b]
D2	VSS	VSS
E3	CLOCKI	CLOCKI
F3	LAD0	LAD0
E2	LAD1	LAD1
D1	LAD2	LAD2
F2	LAD3	LAD3
E1	LFRAME#	LFRAME#
G3	LDRQ#	LDRQ#
F1	PCI_RESET#	PCI_RESET#
G1	PCI_CLK	PCI_CLK
G2	SER_IRQ	SER_IRQ
H1	VSS	VSS
H2	VCC	VCC
H3	GP44 / TXD6	nIDE_RSTDRV / GP44
J2	GP45 / RXD6	nPCIRST1 / GP45
K2	GP46 / nSCIN6	nPCIRST2 / GP46
J3	GP47 / nSCOUT6	nPCIRST3 / GP47
J1	AVSS	AVSS
K1	VBAT	VBAT
K3	GP27 / nIO_SMI / P17	GP27 / nIO_SMI / P17
J4	KDAT / GP21	KDAT / GP21
L2	KCLK / GP22	KCLK / GP22
L3	MDAT / GP32	MDAT / GP32
K4	MCLK / GP33	MCLK / GP33
L4	GP36 / nKBDRST	GP36 / nKBDRST
L5	GP37 / A20M	GP37 / A20M
G7	VSS	VSS
G6	VTR	VTR
K7	nRI1	nRI1
L6	nDCD1	nDCD1
K8	RXD1	RXD1
J8	TXD1 / SIOXNOROUT	TXD1 / SIOXNOROUT
K6	nDSR1	nDSR1
K5	nRTS1 / SYSOPT0	nRTS1 / SYSOPT0
J7	nCTS1	nCTS1
J6	nDTR1 / SYSOPT1	nDTR1 / SYSOPT1
J5	GP50 / nRI2	GP50 / nRI2

© 2016-2017 Microchip Technology Inc.

TABLE 2-2: SCH3226 SUMMARIES BY STRAP OPTION (CONTINUED)

Ball#	Function: StrapOPT=1	Function: StrapOPT=0
L9	VTR	VTR
L7	VSS	VSS
K9	GP51 / nDCD2	GP51 / nDCD2
J9	GP52 / RXD2(IRRX2)	GP52 / RXD2(IRRX2)
H9	GP53 / TXD2(IRTX2)	GP53 / TXD2(IRTX2)
G9	GP54 / nDSR2	GP54 / nDSR2
L10	GP55 / nRTS2 / RESGEN	GP55 / nRTS2 / RESGEN
K10	GP56 / nCTS2	GP56 / nCTS2
J10	GP57 / nDTR2	GP57 / nDTR2
H10	RXD5	PB_OUT#
K11	TXD5	PS_ON#
J11	nSCOUT5	PB_IN#
H11	nSCIN5	SLP_SX#
F9	GP10 / RXD3	GP10 / RXD3
G10	GP11 / TXD3	GP11 / TXD3
E9	GP14 / nDSR3	GP14 / nDSR3
F10	GP17 / nRTS3	GP17 / nRTS3
G11	GP16 / nCTS3	GP16 / nCTS3
F11	GP42 / nIO_PME	GP42 / nIO_PME
E10	VTR	VTR
E11	GP15 / nDTR3	GP15 / nDTR3
D9	GP61 / nLED2 / CLKO	GP61 / nLED2 / CLKO
D10	GP60 / nLED1 / WDT	GP60 / nLED1 / WDT
D11	GP13 / nRI3	GP13 / nRI3
C11	GP12 / nDCD3	GP12 / nDCD3
C10	GP31 / nRI4	GP31 / nRI4
C9	GP63 / nDCD4	GP63 / nDCD4
B11	CLKI32	CLKI32
B10	nRSMRST	nRSMRST
A10	VSS	VSS
C8	GP64 / RXD4	GP64 / RXD4
B9	GP65 / TXD4	GP65 / TXD4
A9	GP66 / nDSR4	GP66 / nDSR4
B8	GP67 / nRTS4	GP67 / nRTS4
A8	GP62 / nCTS4	GP62 / nCTS4
C7	GP34 / nDTR4	GP34 / nDTR4
A7	PWRGD_OUT	PWRGD_OUT
B7	PWRGD_PS	PWRGD_PS
E7	nFPRST / GP30	nFPRST / GP30
F7	VTR	VTR
C6	VSS	VSS
B6	nTHERMTRIP	nTHERMTRIP
E6	nHWM_INT	nHWM_INT
A6	PWM3	PWM3

© 2016-2017 Microchip Technology Inc.

TABLE 2-2: SCH3226 SUMMARIES BY STRAP OPTION (CONTINUED)

Ball#	Function: StrapOPT=1	Function: StrapOPT=0
F5	PWM2	PWM2
A5	PWM1	PWM1
E5	FANTACH3	FANTACH3
B5	FANTACH2	FANTACH2
C5	FANTACH1	FANTACH1
B4	HVSS	HVSS
C4	HVTR	HVTR
A4	REMOTE2-	REMOTE2-
A3	REMOTE2+	REMOTE2+
A2	REMOTE1-	REMOTE1-
B1	REMOTE1+	REMOTE1+
B3	VCCP_IN	VCCP_IN
B2	+2.5V_IN	+2.5V_IN

a. The STRAPOPT connection defines pin functions for this package, and also the contents of the Device ID register at Plug&Play Index 0x20:
When connected to VTR, the table column STRAPOPT=1 applies,
and Device ID = 0x7F.
When connected to VSS, the table column STRAPOPT=0 applies,
and Device ID = 0x7D.

b. For correct operation, this lead must always be connected to VSS.

FIGURE 2-3: SCH3224 PIN DIAGRAM

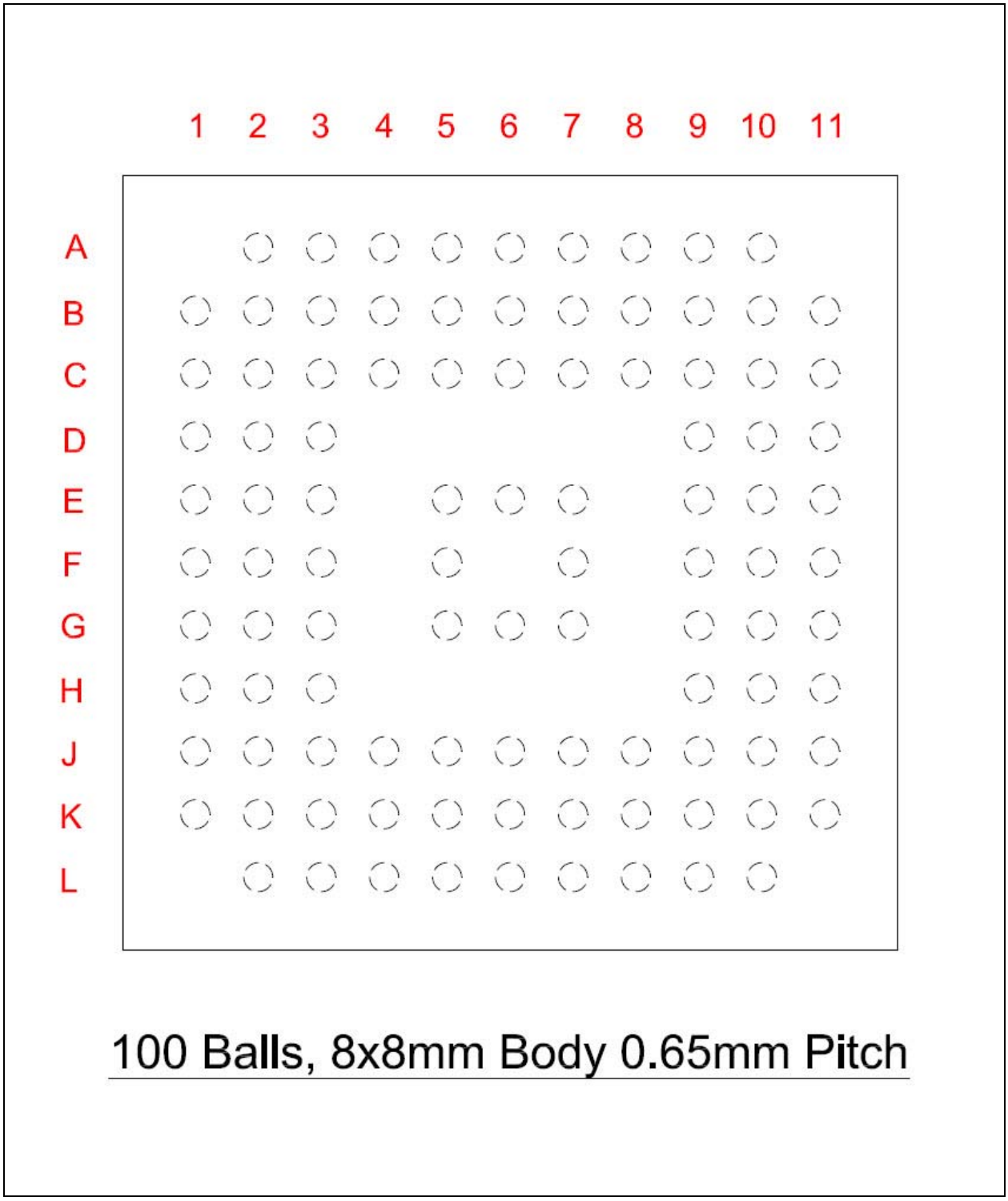

© 2016-2017 Microchip Technology Inc.

Highlighted rows indicate balls whose function depends on the STRAPOPT strap input.

TABLE 2-3: SCH3224 SUMMARY

Ball#	Function[a]
C3	+12V_IN
C2	+5V_IN
D3	VTR
E6	TEST=VSS[b]
D2	VSS
F2	CLOCKI
E2	LAD0
D1	LAD1
E3	LAD2
F3	LAD3
E1	LFRAME#
G3	LDRQ#
F1	PCI_RESET#
G1	PCI_CLK
G2	SER_IRQ
H1	VSS
H2	VCC
H3	GP44 / TXD6
F5	GP45 / RXD6
E5	GP46 / nSCIN6
J2	GP47 / nSCOUT6
J1	AVSS
K1	VBAT
J3	GP27 / nIO_SMI / P17
J4	KDAT / GP21
K3	KCLK / GP22
K2	MDAT / GP32
L2	MCLK / GP33
L3	GP36 / nKBDRST
J5	GP37 / A20M
K4	RESERVED=N/C (Make no connection.)
G6	VTR
K5	nINIT
G5	nSLCTIN
J6	PD0
L5	PD1
K6	PD2
L4	PD3
L6	PD4
C10	PD5
K7	PD6
J7	PD7
G7	VSS

© 2016-2017 Microchip Technology Inc.

TABLE 2-3: SCH3224 SUMMARY (CONTINUED)

Ball#	Function[a]
C7	SLCT
E7	PE
L8	BUSY
K8	nACK
J8	nERROR
G11	nALF
K9	nSTROBE
L10	nRI1
J9	nDCD1
K10	RXD1
K11	TXD1 / SIOXNOROUT
J10	nDSR1
J11	nRTS1 / SYSOPT0
H9	nCTS1
H10	nDTR1 / SYSOPT1
H11	GP50 / nRI2
L9	VTR
L7	VSS
G9	GP51 / nDCD2
G10	GP52 / RXD2(IRRX2)
F11	GP53 / TXD2(IRTX2)
F10	GP54 / nDSR2
E11	GP55 / nRTS2 / RESGEN
D11	GP56 / nCTS2
F9	GP57 / nDTR2
D10	RXD5
B11	TXD5
E9	nSCOUT5
D9	nSCIN5
C11	GP42 / nIO_PME
E10	VTR
B10	GP61 / nLED2 / CLKO
C9	GP60 / nLED1 / WDT
C1	CLKI32
B9	nRSMRST
A10	VSS
C8	PWRGD_OUT
A9	PWRGD_PS
B8	nFPRST / GP30
F7	VTR
C6	VSS
B7	nTHERMTRIP
A8	nHWM_INT
A7	PWM3

© 2016-2017 Microchip Technology Inc.

TABLE 2-3: SCH3224 SUMMARY (CONTINUED)

Ball#	Function[a]
B6	PWM2
A6	PWM1
A5	FANTACH3
B5	FANTACH2
C5	FANTACH1
B4	HVSS
C4	HVTR
A4	REMOTE2-
A3	REMOTE2+
A2	REMOTE1-
B1	REMOTE1+
B3	VCCP_IN
B2	+2.5V_IN

a. Device ID register at Plug&Play Index 0x20 holds 0x7F.

b. For correct operation, this lead must always be connected to VSS.

FIGURE 2-4: SCH3222 PIN DIAGRAM

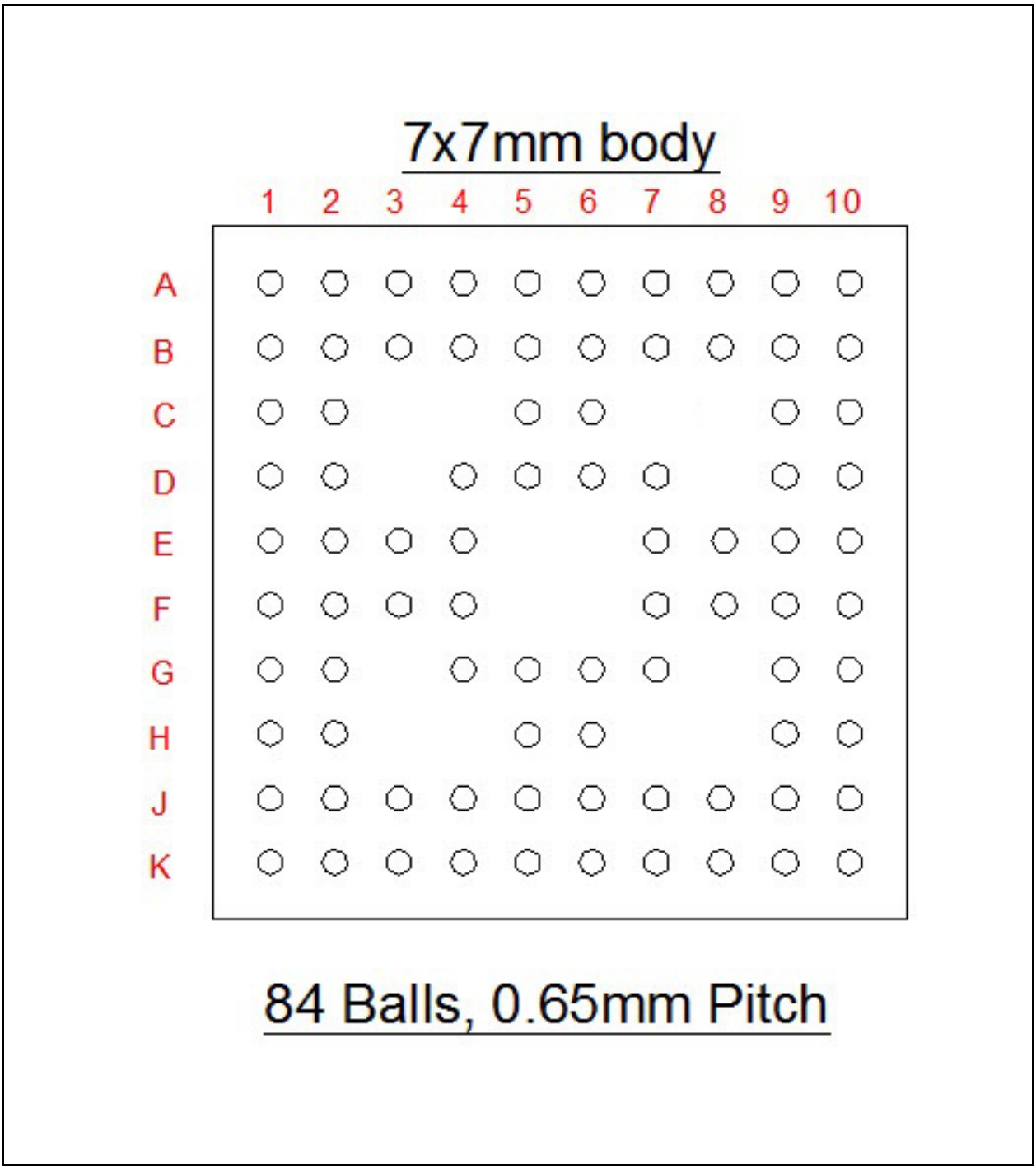

© 2016-2017 Microchip Technology Inc.

TABLE 2-4: SCH3222 SUMMARY

BALL#	FUNCTION[a]
B1	+5V_IN
A1	GP40
C1	VTR
A2	TEST=VSS[b]
D1	VSS
E1	CLOCKI
B2	LAD0
C2	LAD1
B3	LAD2
D2	LAD3
F1	LFRAME#
F2	PCI_RESET#
F3	PCI_CLK
E3	SER_IRQ
G2	VSS
G1	VCC
H1	GP44 / TXD6
J1	GP45 / RXD6
J2	GP46 / nSCIN6
K1	GP47 / nSCOUT6
K2	AVSS
H2	VBAT
K3	GP27 / nIO_SMI / P17
J3	KDAT / GP21
J4	KCLK / GP22
F4	MDAT / GP32
E4	MCLK / GP33
J5	GP36 / nKBDRST
K4	GP37 / A20M
K6	VSS
K5	VTR
K7	VSS
K8	nRI1
H5	nDCD1
K10	RXD1
J10	TXD1 / SIOXNOROUT
K9	nDSR1
J9	nRTS1 / SYSOPT0
H10	nCTS1
H9	nDTR1 / SYSOPT1
J8	GP50 / nRI2
G9	VTR
J7	VSS
G5	GP51 / nDCD2

© 2016-2017 Microchip Technology Inc.

TABLE 2-4: SCH3222 SUMMARY (CONTINUED)

BALL#	FUNCTION[a]
G10	GP52 / RXD2(IRRX2)
F10	GP53 / TXD2(IRTX2)
G7	GP54 / nDSR2
J6	GP55 / nRTS2 / RESGEN
H6	GP56 / nCTS2
F9	GP57 / nDTR2
F8	RXD5
F7	TXD5
G6	nSCOUT5
E9	nSCIN5
E10	GP10 / RXD3
D10	GP11 / TXD3
G4	GP14 / nDSR3
E8	GP17 / nRTS3
E7	GP16 / nCTS3
D7	GP42 / nIO_PME
D4	VTR
C10	GP15 / nDTR3
D9	GP61 / nLED2 / CLKO
C9	GP60 / nLED1 / WDT
B9	GP13 / nRI3
B10	GP12 / nDCD3
A10	GP31 / nRI4
A9	GP63 / nDCD4
D6	CLKI32
B8	nRSMRST
A4	VSS
A8	GP64 / RXD4
A7	GP65 / TXD4
C6	GP66 / nDSR4
B7	GP67 / nRTS4
C5	GP62 / nCTS4
B6	GP34 / nDTR4
B5	PWRGD_OUT
B4	PWRGD_PS
A6	nFPRST / GP30
A3	VTR
D5	VSS
A5	VSS
E2	VSS

a. Device ID register at Plug&Play Index 0x20 holds 0x7F.
b. For correct operation, this lead must always be connected to VSS.

© 2016-2017 Microchip Technology Inc.

2.2 Pin Functions

Table 2-5 lists all possible SCH322x pin functions. See Table 2-1 through Table 2-4 for the pins that apply to specific family members.

These functions are all available only on the SCH3227 device, and then certain functions require specific setting of the STRAPOPT pin, which is new to the SCH322x family. The STRAPOPT pin appears in the SCH3227 (Table 2-1) and SCH3226 (Table 2-2) family members only.

TABLE 2-5: SCH322X PIN FUNCTIONS DESCRIPTION

Note	Name	Description	VCC Power Plane	VTR-POWER Plane	VCC=0 Operation (Note 2-14)	Buffer Modes (Note 2-1)
PACKAGE PINOUT STRAP OPTION PIN (SCH3227 AND SCH3226 ONLY)						
	STRAPOPT	Pinout Strap Option		STRAPOPT	No Gate	I
POWER PINS						
2-3, 2-4	VCC	+3.3 Volt Supply Voltage				
2-3, 2-4	VTR	+3.3 Volt Standby Supply Voltage				
2-8	VBAT	+3.0 Volt Battery Supply)				
	VSS	Ground				
	AVSS	Analog Ground				
2-3	HVTR	Analog Power. +3.3V VTR pin dedicated to the Hardware Monitoring block. HVTR is powered by +3.3V Standby power VTR.				
2-3	HVSS	Analog Ground. Internally connected to all of the Hardware Monitoring Block circuitry.				
CLOCK PINS						
	CLKI32	32.768kHz Trickle Clock Input		CLKI32	No Gate	IS
	CLOCKI	14.318MHz Clock Input	CLOCKI			IS
LPC INTERFACE						
	LAD[3:0]	Multiplexed Command Address and Data	LAD[3:0]		GATE/ Hi-Z	PCI_IO
	LFRAME#	Frame signal. Indicates start of new cycle and termination of broken cycle	LFRAME#		GATE	PCI_I
	LDRQ#	Encoded DMA Request	LDRQ#		GATE/Hi-Z	PCI_O
	PCI_RESET#	PCI Reset	PCI_RESET#		NO GATE	PCI_I
	PCI_CLK	PCI Clock	PCI_CLK		GATE	PCI_ICLK
	SER_IRQ	Serial IRQ	SER_IRQ		GATE / Hi-Z	PCI_IO
SERIAL PORT 1 INTERFACE						
	RXD1	Receive Data 1	RXD1		GATE	IS
	TXD1 /SIO XNOR_OUT	Transmit Data 1 / XNOR-Chain test mode Output for SIO block	TXD1 /SIO XNOR_OUT		HI-Z	O12/O12
	nDSR1	Data Set Ready 1	nDSR1		GATE	I

TABLE 2-5: SCH322X PIN FUNCTIONS DESCRIPTION (CONTINUED)

Note	Name	Description	VCC Power Plane	VTR-POWER Plane	VCC=0 Operation (Note 2-14)	Buffer Modes (Note 2-1)
2-7	nRTS1/ SYSOPT0	Request to Send 1/ SYSOPT (Configuration Port Base Address Control)	nRTS1/ SYSOPT0		GATE/ Hi-Z	OP14 / I
	nCTS1	Clear to Send 1	nCTS1		GATE	I
	nDTR1 / SYSOPT1	Data Terminal Ready 1	nDTR1 / SYSOPT1		GATE/ Hi-Z	O6 / I
2-9	nRI1	Ring Indicator 1		nRI1	GATE	IS
	nDCD1	Data Carrier Detect 1	nDCD1		GATE	I
SERIAL PORT 2 INTERFACE						
2-9	GP50 / nRI2	Ring Indicator 2	GP50	nRI2	NO GATE/ HI-Z	(I/OD8/OD8) / IS
2-9	GP51 / nDCD2	Data Carrier Detect 2	GP51 / nDCD2		NO GATE/ HI-Z	(I/OD8/OD8) / I
2-9	GP52 / RXD2 (IRRX2)	Receive Data 2 (IRRX2)	GP52 / RXD2 (IRRX2)		NO GATE/ HI-Z	(I/OD8OD8) / IS
2-11, 2-9	GP53 / TXD2 (IRTX2)	Transmit Data 2 (IRTX2)	GP53 / TXD2 (IRTX2)		NO GATE/ HI-Z	(I/O12/OD12) / (O12/OD12) / (O12/OD12)
2-9	GP54 / nDSR2	Data Set Ready 2	GP54 / nDSR2		NO GATE/ HI-Z	(I/OD8/OD8) / I
2-9 2-15	GP55 / nRTS2 / RESGEN	Request to Send 2 / Reset Generator Pulse Width Strap Option	GP55 / nRTS2 / RESGEN		NO GATE/ HI-Z	(I/O8/OD8) / I / IOP8
2-9	GP56 / nCTS2	Clear to Send 2	GP56 / nCTS2		NO GATE/ HI-Z	(I/OD8OD8) / I
2-9	GP57 / nDTR2	Data Terminal Ready 2	GP57 / nDTR2		NO GATE/ HI-Z	(I/OD8OD8) / O6
SERIAL PORT 3 INTERFACE						
2-9	GP13 / nRI3	GPIO / Ring Indicator 3		GP13 / nRI3	NO GATE	(I/O8/OD8) / I
2-9	GP12 / nDCD3	GPIO / Data Carrier Detect 3	nDCD3	GP12	NO GATE	(I/O8/OD8) / I
2-9	GP10 / RXD3	GPIO / Receive Data 3	GP10 / RXD3		/ HI-Z	(IS/O8/OD8) / IS
2-11, 2-9	GP11 / TXD3	GPIO / Transmit Data 3	TXD3	GP11	/ HI-Z	(I/O8/OD8) / O8
2-9	GP14 / nDSR3	GPIO / Data Set Ready 3	nDSR3	GP14	NO GATE	(I/O8/OD8) / I
2-9	GP17 / nRTS3/	GPIO / Request to Send 3	GP17 / nRTS3/		/ HI-Z	(I/O8/OD8) / I
2-9	GP16 / nCTS3	GPIO / Clear to Send 3	GP16 / nCTS3		/ HI-Z	(I/O8/OD8) / I
2-9	GP15 / nDTR3	GPIO / Data Terminal Ready 3	GP15 / nDTR3		/ HI-Z	(I/O12/OD12) / O12
SERIAL PORT 4 INTERFACE						
2-9	GP31 / nRI4	GPO (OD Only in Output Mode) / Ring Indicator 4		GP31 / nRI4	NO GATE	(I/OD8) / I

© 2016-2017 Microchip Technology Inc.

TABLE 2-5: SCH322X PIN FUNCTIONS DESCRIPTION (CONTINUED)

Note	Name	Description	VCC Power Plane	VTR-POWER Plane	VCC=0 Operation (Note 2-14)	Buffer Modes (Note 2-1)
2-9	GP63* / nDCD4	GPIO with I_VID buffer Input / Data Carrier Detect 4	nDCD4	GP63*	NO GATE	(I/O8/OD8) / I
2-9	GP64* / RXD4	GPIO with I_VID buffer Input / Receive Data 4	RXD4	GP64*	NO GATE	(IS/O8/OD8) / IS
2-11, 2-9	GP65* / TXD4	GPIO with I_VID buffer Input / Transmit Data 4	TXD4	GP65*	/ HI-Z	(I/O8/OD8) / O8
2-9	GP66* / nDSR4	GPIO with I_VID buffer Input / Data Set Ready 4	nDSR4	GP66*	NO GATE	(I/O8/OD8) / I
2-9	GP67* / nRTS4	GPIO with I_VID buffer Input / Request to Send 4	nRTS4	GP67*	/ HI-Z	(I/O8/OD8) / I
2-9	GP62* / nCTS4	GPIO with I_VID buffer Input / Clear to Send 4	nCTS4	GP62*	NO GATE	(I/O8/OD8) / I
2-9	GP34 / nDTR4	GPIO (OD Only in Output Mode)/ Data Terminal Ready 4	nDTR4	GP34	/ HI-Z	(I/OD12) / O12
SERIAL PORT 5 INTERFACE						
	nSCOUT5	Serial Port 5 out control	nSCOUT5		/ HI-Z	(O8/OD8)
2-9	nSCIN5	Serial Port 5 input Control		nSCIN5	NO GATE	I
	RXD5	Receive 5	RXD5		GATE	IS
	TXD5	Serial Port 5 Transmit	TXD5		NO GATE / HI-Z	(O12.OD12)
SERIAL PORT 6 INTERFACE						
2-12	GP47 / nSCOUT6	GPIO with Schmitt trigger input Serial Port 6 output control	nSCOUT6	GP47 /	HI-Z	(IS/O4/OD4) / (O4/OD4)
2-12	GP46 / nSCIN6	GPIO with Schmitt trigger input Serial Port 6 input Control		GP46 / nSCIN6	NO GATE	(IS/O8/OD8) / (O8/OD8)
2-12	GP45 / RXD6	GPIO with Schmitt trigger input Receive serial port 6	RXD6	GATE	PG	(IS/O8/OD8) / (O8/OD8)
2-12	GP44 / TXD6	GPIO with Schmitt trigger input Serial Port 6 Transmit	TXD6	GP44	NO GATE/ Hi-Z	(IS/O4/OD4) / (O4/OD4)
PARALLEL PORT INTERFACE						
2-12	nINIT	Initiate Output	nINIT		GATE / HI-Z	(OD14/OP14)
2-12	nSLCTIN	Printer Select Input (Output to printer)	nSLCTIN		GATE / HI-Z	(OD14/OP14)
2-12	PD0	Port Data 0	PD0		GATE / HI-Z	IOP14
2-12	PD1	Port Data 1	PD1		GATE / HI-Z	IOP14
2-12	PD2	Port Data 2	PD2 /		GATE / HI-Z	IOP14

TABLE 2-5: SCH322X PIN FUNCTIONS DESCRIPTION (CONTINUED)

Note	Name	Description	VCC Power Plane	VTR-POWER Plane	VCC=0 Operation (Note 2-14)	Buffer Modes (Note 2-1)
2-12	PD3	Port Data 3	PD3		GATE / HI-Z	IOP14
2-12	PD4	Port Data 4	PD4		GATE / HI-Z	IOP14
2-12	PD5	Port Data 5	PD5		GATE / HI-Z	IOP14
2-12	PD6	Port Data 6	PD6		GATE / HI-Z	IOP14
2-12	PD7	Port Data 7	PD7		GATE / HI-Z	IOP14
2-12	SLCT	Printer Selected Status	SLCT		GATE / HI-Z	I
2-12	PE	Paper End	PE		GATE / HI-Z	I
2-12	BUSY	Busy	BUSY		GATE / HI-Z	I
2-12	nACK	Acknowledge	nACK		GATE / HI-Z	I
2-12	nERROR	Error	nERROR		GATE / HI-Z	I
2-12	nALF	Autofeed Output	nALF		GATE / HI-Z	(OD14/OP14)
2-12	nSTROBE	Strobe Output	nSTROBE		GATE / HI-Z	(OD14/OP14)
KEYBOARD/MOUSE INTERFACE						
2-9	KDAT/GPGP21	Keyboard Data I/O General Purpose I/O	KDAT/GPGP21		NO GATE / HI-Z	(I/OD12) / (I/O12/OD12)
2-9	KCLK/GPGP22	Keyboard Clock I/O General Purpose I/O	KCLK/GPDP22		NO GATE / HI-Z	(I/OD12) / (I/O12/OD12)
2-9	MDAT/GPGP32	Mouse Data I/O /General Purpose I/O	MDAT/GPGP32		NO GATE / HI-Z	(I/OD12) / (I/O12/OD12)
2-9	MCLK/GPGP33	Mouse Clock I/O /General Purpose I/O	MCLK/GPGP33		NO GATE / HI-Z	(I/OD12) / (I/O12/OD12)
2-6	GP36/ nKBDRST	General Purpose I/O. GPIO can be configured as an Open-Drain Output. Keyboard Reset Open-Drain Output (Note 2-10)	GP36/ nKBDRST		NO GATE / HI-Z	(I/O8/OD8) /OD8
2-6	GP37/ A20M	General Purpose I/O. GPIO can be configured as an Open-Drain Output. Gate A20 Open-Drain Output (Note 2-10)	GP37/ A20M		NO GATE / HI-Z	(I/O8/OD8) /OD8
RESETS LOGIC						
2-12	nPCIRST3 / GP47	PCI Reset output 3 GPIO with Schmitt trigger input	nPCIRST3	GP47	NO GATE	(O4/OD4) / (IS/O4/OD4)
2-12	nPCIRST2 / GP46	PCI Reset output 2 GPIO with Schmitt trigger input	nPCIRST2	GP46	NO GATE	(O8/OD8) / (IS/O8/OD8)

© 2016-2017 Microchip Technology Inc.

TABLE 2-5: SCH322X PIN FUNCTIONS DESCRIPTION (CONTINUED)

Note	Name	Description	VCC Power Plane	VTR-POWER Plane	VCC=0 Operation (Note 2-14)	Buffer Modes (Note 2-1)
2-12	nPCIRST1 / GP45	PCI Reset output 1 GPIO with Schmitt trigger input	nPCIRST1	GP45	NO GATE	(O8/OD8) / (IS/O8/OD8)
2-12	nIDE_RSTDRV / GP44	IDE Reset output GPIO with Schmitt trigger input	nIDE_RST DRV	GP44	NO GATE	(O4/OD4) / (IS/O4/OD4)
GLUE LOGIC						
	PB_IN#	Power Button In is used to detect a power button event		PB_IN#	NO GATE	I
2-9	SLP_SX#	Sx Sleep State Input Pin.		SLP_SX#	NO GATE	I
	PB_OUT#	Power Button Out		PB_OUT#	NO GATE	O8
	PS_ON#	Power supply On		PS_ON#	NO GATE	O12
MISCELLANEOUS PINS						
	GP42/ nIO_PME	General Purpose I/O. Power Management Event Output. This active low Power Management Event signal allows this device to request wake-up in either S3 or S5 and below.		GP42/ nIO_PME	NO GATE	(I/O12/OD12) /(O12/OD12)
2-8, 2-9	GP60 /nLED1 /WDT	General Purpose I/O /nLED1 Watchdog Timer Output		GP60 /nLED1 /WDT	NO GATE	(I/O12/OD12) /(O12/OD12) /(O12/OD12)
	nFPRST / GP30	Front Panel Reset / General Purpose IO		nFPRST / GP30	NO GATE	ISPU_400 / (I/O4/OD4)
	PWRGD_PS	Power Good Input from Power Supply		PWRGD_PS	NO GATE	ISPU_400
	PWRGD_OUT	Power Good Output – Open Drain		PWRGD_OUT	NO GATE	OD8
	nRSMRST	Resume Reset Output		nRSMRST	NO GATE	OD24
2-8, 2-9	GP61 /nLED2 / CLKO	General Purpose I/O /nLED2 / Programmable Clock Output		GP61 /nLED2 / CLKO	NO GATE	(I/O12/OD12) / (O12/OD12) / (O12/OD12)
2-9	GP27 /nIO_SMI /P17	General Purpose I/O /System Mgt. Interrupt /8042 P17 I/O	GP27 /nIO_SMI /P17	GP27	/ HI-Z	(I/O12/OD12) /(O12/OD12) /(I/O12/OD12)
HARDWARE MONITORING BLOCK						
	nHWM_INT	Interrupt output for Hardware monitor		nHWM_INT		OD8
2-10	+5V_IN	Analog input for +5V	HVTR			I_{AN}
2-10	+2.5_IN	Analog input for +2.5V	HVTR			I_{AN}
2-10	VCCP_IN	Analog input for +Vccp (processor voltage: 1.5 V nominal).	HVTR			I_{AN}
2-10	+12V_IN	Analog input for +12V	HVTR			I_{AN}

TABLE 2-5: SCH322X PIN FUNCTIONS DESCRIPTION (CONTINUED)

Note	Name	Description	VCC Power Plane	VTR-POWER Plane	VCC=0 Operation (Note 2-14)	Buffer Modes (Note 2-1)
	REMOTE1-	This is the negative input (current sink) from the remote thermal diode 1.	HVTR			I_{AND-}
	REMOTE1+	This is the positive input (current source) from the remote thermal diode 1.	HVTR			I_{AND+}
	REMOTE2-	This is the negative input (current sink) from the remote thermal diode 2.	HVTR			I_{AND-}
	REMOTE2+	This is the positive input (current source) from the remote thermal diode 2.	HVTR			I_{AND+}
	PWM1	Fan Speed Control 1 Output.		PWM1		OD8
	PWM2	Fan Speed Control 2 Output		PWM2		OD8
	PWM3	Fan Speed Control 3 Output		PWM3		OD8
	nTHERMTRIP	Thermtrip output		nTHERMTRIP		OD_PH
	FANTACH1	Tachometer Input 1 for monitoring a fan.		FANTACH1		I_M
	FANTACH2	Tachometer Input 2 for monitoring a fan.		FANTACH2		I_M
	FANTACH3	Tachometer Input 3 for monitoring a fan.		FANTACH3		I_M

Note: The “n” as the first letter of a signal name or the “#” as the suffix of a signal name indicates an “Active Low” signal.

Note 2-1 Buffer types per function on multiplexed pins are separated by a slash “/”. Buffer types in parenthesis represent multiple buffer types for a single pin function.

Note 2-2 Pins that have input buffers must always be held to either a logical low or a logical high state when powered. Bi-directional buses that may be trisected should have either weak external pull-ups or pull-downs to hold the pins in a logic state (i.e., logic states are VCC or ground).

Note 2-3 VCC and VSS pins are for Super I/O Blocks. HVTR and HVSS are dedicated for the Hardware Monitoring Block.

Note 2-4 VTR can be connected to VCC if no wake-up functionality is required.

Note 2-5 The Over Current Sense Pin requires an external pull-up (30ua pull-up is suggested).

Note 2-6 External pull-ups must be placed on the nKBDRST and A20M pins. These pins are GPIOs that are inputs after an initial power-up (VTR POR). If the nKBDRST and A20M functions are to be used, the system must ensure that these pins are high.

Note 2-7 The nRTS1/SYSOPT0 pin requires an external pull-down resistor to put the base I/O address for configuration at 0x02E. An external pull-up resistor is required to move the base I/O address for configuration to 0x04E.

Note 2-8 The LED pins are powered by VTR so that the LEDs can be controlled when the part is under VTR power.

Note 2-9 This pin is an input into the wake-up logic that is powered by VTR. In the case of a ring indicator for a serial port, or a GPIO it will also go to VCC powered logic. This logic must be disabled when VCC=0.

© 2016-2017 Microchip Technology Inc.

Note 2-10 This analog input is backdrive protected. Although HVTR is powered by VTR, it is possible that monitored power supplies may be powered when HVTR is off.

Note 2-11 The GP53/TXD2(IRTX) pin defaults to the GPIO input function on a VTR POR and presents a tristate impedance. When VCC=0 the pin is tristate. If GP53 function is selected and VCC is power is applied, the pin reflects the current state of GP53. The GP53/TXD2(IRTX) pin is tristate when it is configured for the TXD2 (IRTX) function under various conditions detailed in Section 6.2.1, "IR Transmit Pin," on page 51.

Note 2-12 The Reset and Glue Logic functions are only available on these pins in the SCH3227 and SCH3226 family members, requiring also that the STRAPOPT pin on these devices be tied low.
Serial Ports 5 and 6 are available on all family members, on the same pins, and also require (SCH3227 and SCH3226 only) that the STRAPOPT pin be pulled high.
In all the SCH322x family, GP44--47 have Schmitt trigger inputs.

Note 2-13 The pins listed here are pins used in all of the SCH322x devices.

Note 2-14 All logic is powered by VTR. Vcc on pin 29 is used as an indication of the presence of the VCC rail being active. All logic that requires VCC power, is only enabled when the VCC rail is active.

Note 2-15 The GP55/nRTS2/RESGEN pin requires an external pull-down resistor to enable 500ms delay circuit. An external pull-up resistor is required to enable 200ms delay circuit.

USER'S NOTE:

Open-drain pins should be pulled-up externally to supply shown in the power well column. All other pins are driven under the power well shown.

- NOMENCLATURE:
  - No Gate indicates that the pin is not protected, or affected by VCC=0 operation
  - Gate indicates that the pin is protected as an input (if required) or set to a HI-Z state as an output (if required)
  - In these columns, information is given in order of pin function: e.g. 1st pin function / 2nd pin function

2.3 Buffer Description

Table 2-6 lists the buffers that are used in this device. A complete description of these buffers can be found in Section 26.0, "Operational Description," on page 252.

TABLE 2-6: BUFFER DESCRIPTION

Buffer	Description
I	Input TTL Compatible - Super I/O Block.
IL	Input, Low Leakage Current.
I_M	Input - Hardware Monitoring Block.
I_{AN}	Analog Input, Hardware Monitoring Block.
I_{ANP}	Back Bias Protected Analog Input, Hardware Monitoring Block.
I_{AND-}	Remote Thermal Diode (current sink) Negative Input
I_{AND+}	Remote Thermal Diode (current source) Positive Input
IS	Input with Schmitt Trigger.
I_VID	Input. See DC Characteristics Section.
I_MOD3	Input/Output (Open Drain), 3mA sink.
I_MO3	Input/Output, 3mA sink, 3mA source.
O6	Output, 6mA sink, 3mA source.
O8	Output, 8mA sink, 4mA source.
OD8	Open Drain Output, 8mA sink.
IO8	Input/Output, 8mA sink, 4mA source.
IOD8	Input/Open Drain Output, 8mA sink, 4mA source.
IS/O8	Input with Schmitt Trigger/Output, 8mA sink, 4mA source.
O12	Output, 12mA sink, 6mA source.

© 2016-2017 Microchip Technology Inc.

TABLE 2-6: BUFFER DESCRIPTION (CONTINUED)

Buffer	Description
OD12	Open Drain Output, 12mA sink.
OD4	Open Drain Output, 4mA sink.
IO12	Input/Output, 12mA sink, 6mA source.
IOD12	Input/Open Drain Output, 12mA sink, 6mA source.
OD14	Open Drain Output, 14mA sink.
OP14	Output, 14mA sink, 14mA source.
OD_PH	Input/Output (Open Drain), See DC Electrical Characteristics on page 252
IOP14	Input/Output, 14mA sink, 14mA source. Backdrive protected.
IO16	Input/Output 16mA sink.
IOD16	Input/Output (Open Drain), 16mA sink.
PCI_IO	Input/Output. These pins must meet the PCI 3.3V AC and DC Characteristics.
PCI_O	Output. These pins must meet the PCI 3.3V AC and DC Characteristics. (Note 2-16)
PCI_I	Input. These pins must meet the PCI 3.3V AC and DC Characteristics. (Note 2-16)
PCI_ICLK	Clock Input. These pins must meet the PCI 3.3V AC and DC Characteristics and timing. (Note 2-17)
nSW	n Channel Switch (R_{on}~25 Ohms)
ISPU_400	Input with 400mV Schmitt Trigger and 30uA Integrated Pull-Up.
ISPU	Input with Schmitt Trigger and Integrated Pull-Up.

Note 2-16 See the “PCI Local Bus Specification,” Revision 2.1, Section 4.2.2.

Note 2-17 See the “PCI Local Bus Specification,” Revision 2.1, Section 4.2.2 and 4.2.3.

© 2016-2017 Microchip Technology Inc.

3.0 BLOCK DIAGRAM

FIGURE 3-1: SCH322X BLOCK DIAGRAM

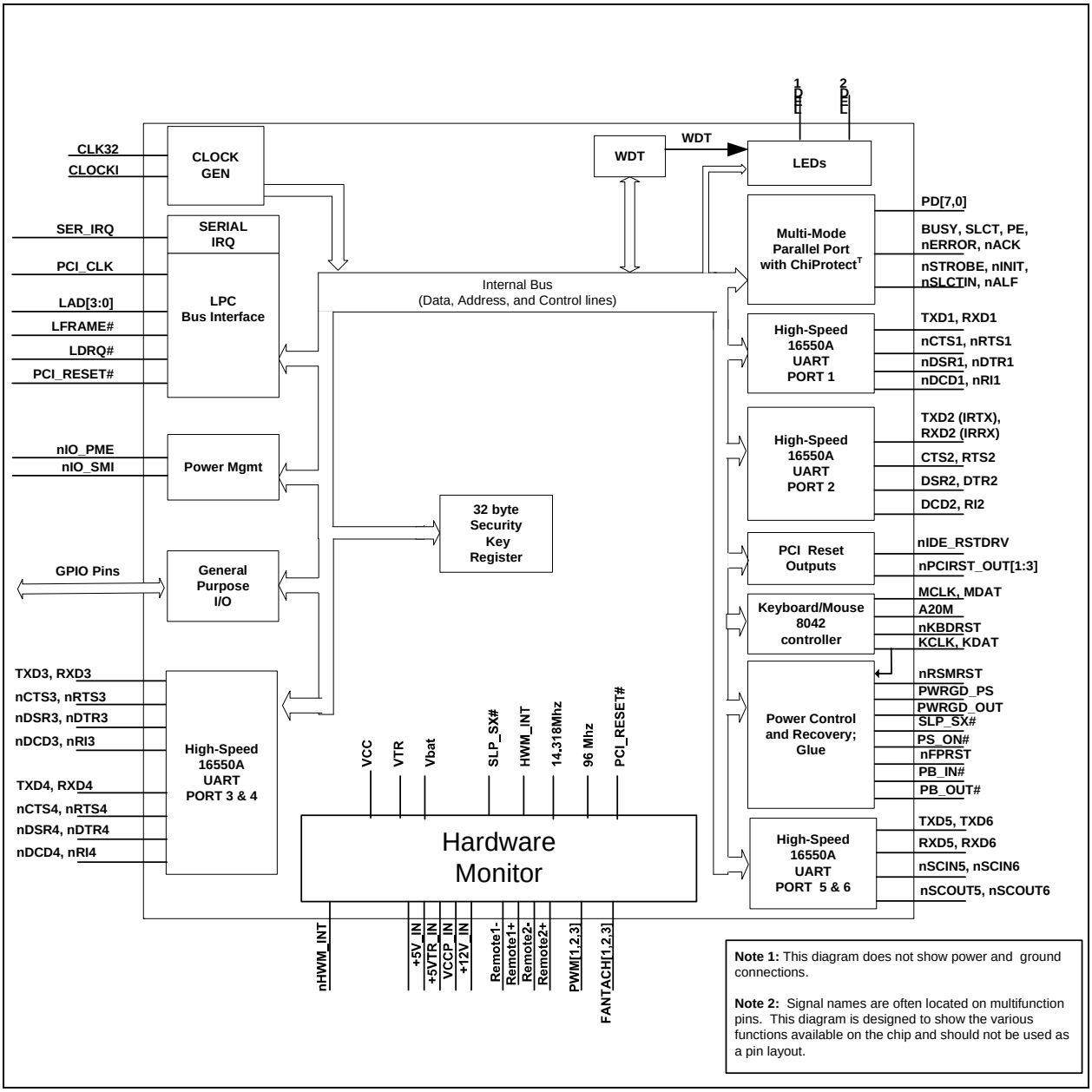

4.0 POWER FUNCTIONALITY

The SCH322x has five power planes: VCC, HVTR, VREF, VTR, and Vbat.

4.1 VCC Power

The SCH322x is a 3.3 Volt part. The VCC supply is 3.3 Volts (nominal). VCC is the main power supply for the Super I/O Block. See Section 26.2, "DC Electrical Characteristics," on page 252.

4.2 HVTR Power

The SCH322x is family of 3.3 Volt devices. The HVTR supply is 3.3 Volts (nominal). HVTR is a dedicated power supply for the Hardware Monitoring Block. HVTR is connected to the VTR suspend well. See Section 26.2, "DC Electrical Characteristics," on page 252.

Note:	The hardware monitoring logic is powered by HVTR, but only operational when VCC is on. The hardware monitoring block is connected to the suspend well to retain the programmed configuration through a sleep cycle.

4.3 VTR Support

The SCH322x requires a trickle supply (VTR) to provide sleep current for the programmable wake-up events in the PME interface when VCC is removed. The VTR supply is 3.3 Volts (nominal). See Section 26.0, "Operational Description," on page 252. The maximum VTR current that is required depends on the functions that are used in the part. See Section 26.0.

If the SCH322x is not intended to provide wake-up capabilities on standby current, VTR can be connected to VCC. VTR powers the IR interface, the PME configuration registers, and the PME interface. The VTR pin generates a VTR Power-on-Reset signal to initialize these components. If VTR is to be used for programmable wake-up events when VCC is removed, VTR must be at its full minimum potential at least 10 ms before Vcc begins a power-on cycle. Note that under all circumstances, the hardware monitoring HVTR must be driven as the same source as VTR.

4.3.1 TRICKLE POWER FUNCTIONALITY

When the SCH322x is running under VTR only (VCC removed), PME wakeup events are active and (if enabled) able to assert the nIO_PME pin active low.

The following requirements apply to all I/O pins that are specified to be 5 volt tolerant.

- I/O buffers that are wake-up event compatible are powered by VCC. Under VTR power (VCC=0), these pins may only be configured as inputs. These pins have input buffers into the wakeup logic that are powered by VTR.
- I/O buffers that may be configured as either push-pull or open drain under VTR power (VCC=0), are powered by VTR. This means, at a minimum, they will source their specified current from VTR even when VCC is present.

The GPIOs that are used for PME wakeup as input are GP21-GP22, GP27, GP32, GP33, GP50-GP57, GP60, GP61. These GPIOs function as follows (with the exception of GP60 and GP61 - see below):

- Buffers are powered by VCC, but in the absence of VCC they are backdrive protected (they do not impose a load on any external VTR powered circuitry). They are wakeup compatible as inputs under VTR power. These pins have input buffers into the wakeup logic that are powered by VTR.

All GPIOs listed above are PME wakeup as a GPIO (or alternate function).

GP32 and GP33 revert to their non-inverting GPIO input function when VCC is removed from the part.

The other GPIOs function as follows:

GP36, GP37 and GP40:

- Buffers are powered by VCC. In the absence of VCC they are backdrive protected. These pins do not have input buffers into the wakeup logic that are powered by VTR, and are not used for wakeup.

GP42, GP60 and GP61:

- Buffers powered by VTR. GP42 are the nIO_PME pin which is active under VTR. GP60 and GP61 have LED as the alternate function and the logic is able to control the pin under VTR.

© 2016-2017 Microchip Technology Inc.

The following list summarizes the blocks, registers and pins that are powered by VTR.

- PME interface block
- PME runtime register block (includes all PME, SMI, GPIO, Fan and other miscellaneous registers)
- Digital logic in the Hardware Monitoring block
- “Wake on Specific Key” logic
- LED control logic
- Watchdog Timer
- Power Recovery Logic
- Pins for PME Wakeup:
  - GP42/nIO_PME (output, buffer powered by VTR)
  - CLOCKI32 (input, buffer powered by VTR)
  - nRI1 (input)
  - GP50/nRI2 (input)
  - GP52/RXD2(IRRX) (input)
  - KDAT/GP21 (input)
  - MDAT/GP32 (input)
  - GPIOs (GP21-GP22, GP27, GP32, GP33, GP50-GP57, GP60, GP61) – all input-only except GP60, GP61. See below.
- Other Pins
  - GP60/LED1 (output, buffer powered by VTR)
  - GP61/LED2 (output, buffer powered by VTR)
  - nRSMRST
  - PWRGD_PS
  - PB_IN#
  - PB_OUT#
  - PS_ON#
  - nFPRST
  - SLP_SX#
  - PWRGD_OUT

4.4 Vbat Support

Vbat is a battery generated power supply that is needed to support the power recovery logic. The power recovery logic is used to restore power to the system in the event of a power failure. Power may be returned to the system by a keyboard power button, the main power button, or by the power recovery logic following an unexpected power failure.

The Vbat supply is 3.0 Volts (nominal). See Section 26.0, "Operational Description," on page 252.

The following Runtime Registers are powered by Vbat:

- Bank 2 of the Runtime Register block used for the 32kbyte Security Key register
- PME_EN7 at offset 10h
- PWR_REC Register at offset 49h
- PS_ON Register at offset 4Ah
- PS_ON Previous State Register at offset 53h
- DBLCLICK register at offset 5Bh
- Keyboard Scan Code – Make Byte 1 at offset 5Fh
- Keyboard Scan Code – Make Byte 2 at offset 60h
- Keyboard Scan Code – Break Byte 1 at offset 61h
- Keyboard Scan Code – Break Byte 2 at offset 62h
- Keyboard Scan Code – Break Byte 3 at offset 63h
- Keyboard PWRBTN/SPEKEY at offset 64h

Note:	All Vbat powered pins and registers are powered by VTR when VTR power is on and are battery backed-up when VTR is removed.

4.5 32.768 KHz Trickle Clock Input

The SCH322x utilizes a 32.768 KHz trickle input to supply a clock signal for the WDT, LED blink, Power Recovery Logic, and wake on specific key function.

Indication of 32KHZ Clock

There is a bit to indicate whether or not the 32KHz clock input is connected to the SCH322x. This bit is located at bit 0 of the CLOCKI32 register at 0xF0 in Logical Device A. This register is powered by VTR and reset on a VTR POR.

Bit[0] (CLK32_PRSN) is defined as follows:

0=32KHz clock is connected to the CLKI32 pin (default)

1=32KHz clock is not connected to the CLKI32 pin (pin is grounded).

Bit 0 controls the source of the 32KHz (nominal) clock for the LED blink logic and the “wake on specific key” logic. When the external 32KHz clock is connected, that will be the source for the fan, LED and “wake on specific key” logic. When the external 32KHz clock is not connected, an internal 32KHz clock source will be derived from the 14MHz clock for the LED and “wake on specific key” logic.

The following functions will not work under VTR power (VCC removed) if the external 32KHz clock is not connected. These functions will work under VCC power even if the external 32 KHz clock is not connected.

- Wake on specific key
- LED blink
- Power Recovery Logic
- WDT
- Front Panel Reset with Input Debounce, Power Supply Gate, and CPU Powergood Signal Generation

4.6 Super I/O Functions

The maximum VTR current, I_{TR}, is given with all outputs open (not loaded), and all inputs in a fixed state (i.e., 0V or 3.3V). The total maximum current for the part is the unloaded value PLUS the maximum current sourced by the pin that is driven by VTR. The super I/O pins that are powered by VTR are as follows: GP42/nIO_PME, GP60/LED1, and GP61/LED2. These pins, if configured as push-pull outputs, will source a minimum of 6mA at 2.4V when driving.

The maximum VCC current, I_{CC}, is given with all outputs open (not loaded) and all inputs in a fixed state (i.e., 0V or 3.3V).

The maximum Vbat current, I_{bat}, is given with all outputs open (not loaded) and all inputs in a fixed state (i.e., 0V or 3.3V).

4.7 Power Management Events (PME/SCI)

The SCH322x offers support for Power Management Events (PMEs), also referred to as System Control Interrupt (SCI) events. The terms PME and SCI are used synonymously throughout this document to refer to the indication of an event to the chipset via the assertion of the nIO_PME output signal. See the Section 13.0, "PME Support," on page 94 section.

© 2016-2017 Microchip Technology Inc.

5.0 LPC INTERFACE

5.1 LPC Interface Signal Definition

The signals implemented for the LPC bus interface are described in the tables below. LPC bus signals use PCI 33MHz electrical signal characteristics.

5.1.1 LPC REQUIRED SIGNALS

Signal Name	Type	Description
LAD[3:0]	I/O	LPC address/data bus. Multiplexed command, address and data bus.
LFRAME#	Input	Frame signal. Indicates start of new cycle and termination of broken cycle
PCI_RESET#	Input	PCI Reset. Used as LPC Interface Reset. Same functionality as RST_DRV but active low 3.3V.
PCI_CLK	Input	PCI Clock.

5.1.2 LPC OPTIONAL SIGNALS

Signal Name	Type	Description	Comment
LDRQ#	Output	Encoded DMA/Bus Master request for the LPC interface.	Implemented
SER_IRQ	I/O	Serial IRQ.	Implemented
CLKRUN#	OD	Clock Run	Not Implemented
nIO_PME	OD	Same as the PME# or Power Mgt Event signal. Allows the SCH3227/SCH3226/SCH3224/SCH3222 to request wakeup in S3 and below.	Implemented
LPCPD#	I	Power down - Indicates that the device should prepare for LPC I/F shutdown	Not Implemented
LSMI#	OD	Only need for SMI# generation on I/O instruction for retry.	Not Implemented

5.2 Supported LPC Cycles

Table 5-1 summarizes the cycle types are supported by the SCH3227/SCH3226/SCH3224/SCH3222. All other cycle types are ignored.

TABLE 5-1: SUPPORTED LPC CYCLES

Cycle Type	Transfer Size	Comment
I/O Write	1 Byte	Supported
I/O Read	1 Byte	Supported
Memory Write	1 Byte	Not Supported
Memory Read	1 Byte	Not Supported
DMA Write	1 Byte	Supported
DMA Write	2 Byte	Supported
DMA Write	4 Byte	Not Supported
DMA Read	1 Byte	Supported
DMA Read	2 Byte	Supported
DMA Read	4 Byte	Not Supported
Bus Master Memory Write	1 Byte	Not Supported
Bus Master Memory Write	2 Byte	Not Supported
Bus Master Memory Write	4 Byte	Not Supported
Bus Master Memory Read	1 Byte	Not Supported
Bus Master Memory Read	2 Byte	Not Supported
Bus Master Memory Read	4 Byte	Not Supported
Bus Master I/O Write	1 Byte	Not Supported

© 2016-2017 Microchip Technology Inc.

TABLE 5-1: SUPPORTED LPC CYCLES (CONTINUED)

Cycle Type	Transfer Size	Comment
Bus Master I/O Write	2 Byte	Not Supported
Bus Master I/O Write	4 Byte	Not Supported
Bus Master I/O Read	1 Byte	Not Supported
Bus Master I/O Read	2 Byte	Not Supported
Bus Master I/O Read	4 Byte	Not Supported

5.3 Device Specific Information

The LPC interface conforms to the *"Low Pin Count (LPC) Interface Specification"*. The following section will review any implementation specific information for this device.

5.3.1 SYNC PROTOCOL

The SYNC pattern is used to add wait states. For read cycles, the SCH3227/SCH3226/SCH3224/SCH3222 immediately drives the SYNC pattern upon recognizing the cycle. The host immediately drives the sync pattern for write cycles. If the SCH3227/SCH3226/SCH3224/SCH3222 needs to assert wait states, it does so by driving 0101 or 0110 on LAD[3:0] until it is ready, at which point it will drive 0000 or 1001. The SCH3227/SCH3226/SCH3224/SCH3222 will choose to assert 0101 or 0110, but not switch between the two patterns.

The data (or wait state SYNC) will immediately follow the 0000 or 1001 value. The SYNC value of 0101 is intended to be used for normal wait states, wherein the cycle will complete within a few clocks. The SCH3227/SCH3226/SCH3224/SCH3222 uses a SYNC of 0101 for all wait states in a DMA transfer.

The SYNC value of 0110 is intended to be used where the number of wait states is large. This is provided for EPP cycles, where the number of wait states could be quite large (>1 microsecond). However, the SCH3227/SCH3226/SCH3224/SCH3222 uses a SYNC of 0110 for all wait states in an I/O transfer.

The SYNC value is driven within 3 clocks.

5.3.2 RESET POLICY

The following rules govern the reset policy:

- When PCI_RESET# goes inactive (high), the PCI clock is assumed to have been running for 100usec prior to the removal of the reset signal, so that everything is stable. This is the same reset active time after clock is stable that is used for the PCI bus.
- When PCI_RESET# goes active (low):

1. The host drives the LFRAME# signal high, tristates the LAD[3:0] signals, and ignores the LDRQ# signal.
2. The SCH3227/SCH3226/SCH3224/SCH3222 ignores LFRAME#, tristates the LAD[3:0] pins and drives the LDRQ# signal inactive (high).

© 2016-2017 Microchip Technology Inc.

6.0 SERIAL PORT (UART)

The SCH3227/SCH3226/SCH3224/SCH3222 family incorporates up to four full function UARTs and up to two 4 pin UARTS, for a total of 6 available. They are register compatible with the ACE architecture (NS16450, NS16C550A). The UARTS perform serial-to-parallel conversion on received characters and parallel-to-serial conversion on transmit characters. The data rates are independently programmable from 460.8K baud down to 50 baud. The character options are programmable for 1 start; 1, 1.5 or 2 stop bits; even, odd, sticky or no parity; and prioritized interrupts. The UARTs each contain a programmable baud rate generator that is capable of dividing the input clock or crystal by a number from 1 to 65535. The UARTs are also capable of supporting the MIDI data rate. Refer to the Configuration Registers for information on disabling, power down and changing the base address of the UARTs. The interrupt from a UART is enabled by programming OUT2 of that UART to a logic “1”. OUT2 being a logic “0” disables that UART’s interrupt. The second UART also supports IrDA, HP-SIR and ASK-IR modes of operation.

6.1 Register Description

Addressing of the accessible registers of the Serial Port is shown below. The base addresses of the serial ports are defined by the configuration registers (see Section 23.0, "Configuration Registers," on page 194). The Serial Port registers are located at sequentially increasing addresses above these base addresses. The register set of the UARTS are described below.

TABLE 6-1: ADDRESSING THE SERIAL PORT

DLAB*	A2	A1	A0	Register Name
0	0	0	0	Receive Buffer (read)
0	0	0	0	Transmit Buffer (write)
0	0	0	1	Interrupt Enable (read/write)
X	0	1	0	Interrupt Identification (read)
X	0	1	0	FIFO Control (write)
X	0	1	1	Line Control (read/write)
X	1	0	0	Modem Control (read/write)
X	1	0	1	Line Status (read/write)
X	1	1	0	Modem Status (read/write)
X	1	1	1	Scratchpad (read/write)
1	0	0	0	Divisor LSB (read/write)
1	0	0	1	Divisor MSB (read/write

Note: *DLAB is Bit 7 of the Line Control Register

The following section describes the operation of the registers.

6.1.1 RECEIVE BUFFER REGISTER (RB)

Address Offset = 0H, DLAB = 0, READ ONLY

This register holds the received incoming data byte. Bit 0 is the least significant bit, which is transmitted and received first. Received data is double buffered; this uses an additional shift register to receive the serial data stream and convert it to a parallel 8 bit word which is transferred to the Receive Buffer register. The shift register is not accessible.

6.1.2 TRANSMIT BUFFER REGISTER (TB)

Address Offset = 0H, DLAB = 0, WRITE ONLY

This register contains the data byte to be transmitted. The transmit buffer is double buffered, utilizing an additional shift register (not accessible) to convert the 8 bit data word to a serial format. This shift register is loaded from the Transmit Buffer when the transmission of the previous byte is complete.

6.1.3 INTERRUPT ENABLE REGISTER (IER)

Address Offset = 1H, DLAB = 0, READ/WRITE

The lower four bits of this register control the enables of the five interrupt sources of the Serial Port interrupt. It is possible to totally disable the interrupt system by resetting bits 0 through 3 of this register. Similarly, setting the appropriate bits of this register to a high, selected interrupts can be enabled. Disabling the interrupt system inhibits the Interrupt Identification Register and disables any Serial Port interrupt out of the SCH3227/SCH3226/SCH3224/SCH3222. All other system functions operate in their normal manner, including the Line Status and MODEM Status Registers. The contents of the Interrupt Enable Register are described below.

Bit 0

This bit enables the Received Data Available Interrupt (and timeout interrupts in the FIFO mode) when set to logic “1”.

Bit 1

This bit enables the Transmitter Holding Register Empty Interrupt when set to logic “1”.

Bit 2

This bit enables the Received Line Status Interrupt when set to logic “1”. The error sources causing the interrupt are Overrun, Parity, Framing and Break. The Line Status Register must be read to determine the source.

Bit 3

This bit enables the MODEM Status Interrupt when set to logic “1”. This is caused when one of the Modem Status Register bits changes state.

Bits 4 through 7

These bits are always logic “0”.

6.1.4 FIFO CONTROL REGISTER (FCR)

Address Offset = 2H, DLAB = X, WRITE

This is a write only register at the same location as the IIR. This register is used to enable and clear the FIFOs, set the RCVR FIFO trigger level.

Note:	DMA is not supported. The UART1 and UART2 FCRs are shadowed in the UART1 FIFO Control Shadow Register (runtime register at offset 0x20) and UART2 FIFO Control Shadow Register (runtime register at offset 0x21).

Bit 0

Setting this bit to a logic “1” enables both the XMIT and RCVR FIFOs. Clearing this bit to a logic “0” disables both the XMIT and RCVR FIFOs and clears all bytes from both FIFOs. When changing from FIFO Mode to non-FIFO (16450) mode, data is automatically cleared from the FIFOs. This bit must be a 1 when other bits in this register are written to or they will not be properly programmed.

Bit 1

Setting this bit to a logic “1” clears all bytes in the RCVR FIFO and resets its counter logic to 0. The shift register is not cleared. This bit is self-clearing.

Bit 2

Setting this bit to a logic “1” clears all bytes in the XMIT FIFO and resets its counter logic to 0. The shift register is not cleared. This bit is self-clearing.

Bit 3

Writing to this bit has no effect on the operation of the UART. The RXRDY and TXRDY pins are not available on this chip.

Bit 4,5

Reserved

Bit 6,7

These bits are used to set the Trigger Level For The Rcvr Fifo Interrupt.

© 2016-2017 Microchip Technology Inc.

6.1.5 INTERRUPT IDENTIFICATION REGISTER (IIR)

Address Offset = 2H, DLAB = X, READ

By accessing this register, the host CPU can determine the highest priority interrupt and its source. Four levels of priority interrupt exist. They are in descending order of priority:

1. Receiver Line Status (highest priority)
2. Received Data Ready
3. Transmitter Holding Register Empty
4. MODEM Status (lowest priority)

Information indicating that a prioritized interrupt is pending and the source of that interrupt is stored in the Interrupt Identification Register (refer to Table 6-2 on page 39). When the CPU accesses the IIR, the Serial Port freezes all interrupts and indicates the highest priority pending interrupt to the CPU. During this CPU access, even if the Serial Port records new interrupts, the current indication does not change until access is completed. The contents of the IIR are described below.

Bit 0

This bit can be used in either a hardwired prioritized or polled environment to indicate whether an interrupt is pending. When bit 0 is a logic “0”, an interrupt is pending and the contents of the IIR may be used as a pointer to the appropriate internal service routine. When bit 0 is a logic “1”, no interrupt is pending.

Bits 1 and 2

These two bits of the IIR are used to identify the highest priority interrupt pending as indicated by the Interrupt Control Table (Table 6-2).

Bit 3

In non-FIFO mode, this bit is a logic “0”. In FIFO mode this bit is set along with bit 2 when a timeout interrupt is pending.

Bits 4 and 5

These bits of the IIR are always logic “0”.

Bits 6 and 7

These two bits are set when the FIFO CONTROL Register bit 0 equals 1.

Bit 7	Bit 6	RCVR FIFO Trigger Level (BYTES)
0	0	1
0	1	4
1	0	8
1	1	14

TABLE 6-2: INTERRUPT CONTROL

FIFO Mode Only	Interrupt Identification Register			Interrupt Set and Reset Functions			
BIT 3	BIT 2	BIT 1	BIT 0	PRIORITY LEVEL	INTERRUPT TYPE	INTERRUPT SOURCE	INTERRUPT RESET CONTROL
0	0	0	1	-	None	None	-
0	1	1	0	Highest	Receiver Line Status	Overrun Error, Parity Error, Framing Error or Break Interrupt	Reading the Line Status Register
0	1	0	0	Second	Received Data Available	Receiver Data Available	Read Receiver Buffer or the FIFO drops below the trigger level.

TABLE 6-2: INTERRUPT CONTROL (CONTINUED)

FIFO Mode Only	Interrupt Identification Register			Interrupt Set and Reset Functions			
1	1	0	0	Second	Character Timeout Indication	No Characters Have Been Removed From or Input to the RCVR FIFO during the last 4 Char times and there is at least 1 char in it during this time	Reading the Receiver Buffer Register
0	0	1	0	Third	Transmitter Holding Register Empty	Transmitter Holding Register Empty	Reading the IIR Register (if Source of Interrupt) or Writing the Transmitter Holding Register
0	0	0	0	Fourth	MODEM Status	Clear to Send or Data Set Ready or Ring Indicator or Data Carrier Detect	Reading the MODEM Status Register

6.1.6 LINE CONTROL REGISTER (LCR)

Address Offset = 3H, DLAB = 0, READ/WRITE

FIGURE 6-1: SERIAL DATA

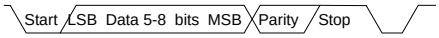

This register contains the format information of the serial line. The bit definitions are:

Bits 0 and 1

These two bits specify the number of bits in each transmitted or received serial character. The encoding of bits 0 and 1 is as follows:

The Start, Stop and Parity bits are not included in the word length.

Bit 1	Bit 0	Word Length
0	0	5 Bits
0	1	6 Bits
1	0	7 Bits
1	1	8 Bits

Bit 2

This bit specifies the number of stop bits in each transmitted or received serial character. The following table summarizes the information.

Bit 2	Word Length	Number of Stop Bits
0	--	1
1	5 bits	1.5
1	6 bits	2
1	7 bits	2
1	8 bits	2

© 2016-2017 Microchip Technology Inc.

Note:	The receiver will ignore all stop bits beyond the first, regardless of the number used in transmitting.

Bit 3

Parity Enable bit. When bit 3 is a logic “1”, a parity bit is generated (transmit data) or checked (receive data) between the last data word bit and the first stop bit of the serial data. (The parity bit is used to generate an even or odd number of 1s when the data word bits and the parity bit are summed).

Bit 4

Even Parity Select bit. When bit 3 is a logic “1” and bit 4 is a logic “0”, an odd number of logic “1”’s is transmitted or checked in the data word bits and the parity bit. When bit 3 is a logic “1” and bit 4 is a logic “1” an even number of bits is transmitted and checked.

Bit 5

This bit is the Stick Parity bit. When parity is enabled it is used in conjunction with bit 4 to select Mark or Space Parity. When LCR bits 3, 4 and 5 are 1 the Parity bit is transmitted and checked as a 0 (Space Parity). If bits 3 and 5 are 1 and bit 4 is a 0, then the Parity bit is transmitted and checked as 1 (Mark Parity). If bit 5 is 0 Stick Parity is disabled.

Bit 6

Set Break Control bit. When bit 6 is a logic “1”, the transmit data output (TXD) is forced to the Spacing or logic “0” state and remains there (until reset by a low level bit 6) regardless of other transmitter activity. This feature enables the Serial Port to alert a terminal in a communications system.

Bit 7

Divisor Latch Access bit (DLAB). It must be set high (logic “1”) to access the Divisor Latches of the Baud Rate Generator during read or write operations. It must be set low (logic “0”) to access the Receiver Buffer Register, the Transmitter Holding Register, or the Interrupt Enable Register.

6.1.7 MODEM CONTROL REGISTER (MCR)

Address Offset = 4H, DLAB = X, READ/WRITE

This 8 bit register controls the interface with the MODEM or data set (or device emulating a MODEM). The contents of the MODEM control register are described below.

Bit 0

This bit controls the Data Terminal Ready (nDTR) output. When bit 0 is set to a logic “1”, the nDTR output is forced to a logic “0”. When bit 0 is a logic “0”, the nDTR output is forced to a logic “1”.

Bit 1

This bit controls the Request To Send (nRTS) output. Bit 1 affects the nRTS output in a manner identical to that described above for bit 0.

Bit 2

This bit controls the Output 1 (OUT1) bit. This bit does not have an output pin and can only be read or written by the CPU.

Bit 3

Output 2 (OUT2). This bit is used to enable an UART interrupt. When OUT2 is a logic "0", the serial port interrupt output is forced to a high impedance state - disabled. When OUT2 is a logic "1", the serial port interrupt outputs are enabled.

Bit 4

This bit provides the loopback feature for diagnostic testing of the Serial Port. When bit 4 is set to logic “1”, the following occur:

1. The TXD is set to the Marking State (logic “1”).
2. The receiver Serial Input (RXD) is disconnected.
3. The output of the Transmitter Shift Register is “looped back” into the Receiver Shift Register input.
4. All MODEM Control inputs (nCTS, nDSR, nRI and nDCD) are disconnected.
5. The four MODEM Control outputs (nDTR, nRTS, OUT1 and OUT2) are internally connected to the four MODEM Control inputs (nDSR, nCTS, RI, DCD).
6. The Modem Control output pins are forced inactive high.
7. Data that is transmitted is immediately received.

This feature allows the processor to verify the transmit and receive data paths of the Serial Port. In the diagnostic mode, the receiver and the transmitter interrupts are fully operational. The MODEM Control Interrupts are also operational but the interrupts' sources are now the lower four bits of the MODEM Control Register instead of the MODEM Control inputs. The interrupts are still controlled by the Interrupt Enable Register.

Bits 5 through 7

These bits are permanently set to logic zero.

6.1.8 LINE STATUS REGISTER (LSR)

Address Offset = 5H, DLAB = X, READ/WRITE

Bit 0

Data Ready (DR). It is set to a logic "1" whenever a complete incoming character has been received and transferred into the Receiver Buffer Register or the FIFO. Bit 0 is reset to a logic "0" by reading all of the data in the Receive Buffer Register or the FIFO.

Bit 1

Overrun Error (OE). Bit 1 indicates that data in the Receiver Buffer Register was not read before the next character was transferred into the register, thereby destroying the previous character. In FIFO mode, an overrun error will occur only when the FIFO is full and the next character has been completely received in the shift register, the character in the shift register is overwritten but not transferred to the FIFO. The OE indicator is set to a logic "1" immediately upon detection of an overrun condition, and reset whenever the Line Status Register is read.

Bit 2

Parity Error (PE). Bit 2 indicates that the received data character does not have the correct even or odd parity, as selected by the even parity select bit. The PE is set to a logic "1" upon detection of a parity error and is reset to a logic "0" whenever the Line Status Register is read. In the FIFO mode this error is associated with the particular character in the FIFO it applies to. This error is indicated when the associated character is at the top of the FIFO.

Bit 3

Framing Error (FE). Bit 3 indicates that the received character did not have a valid stop bit. Bit 3 is set to a logic "1" whenever the stop bit following the last data bit or parity bit is detected as a zero bit (Spacing level). The FE is reset to a logic "0" whenever the Line Status Register is read. In the FIFO mode this error is associated with the particular character in the FIFO it applies to. This error is indicated when the associated character is at the top of the FIFO. The Serial Port will try to resynchronize after a framing error. To do this, it assumes that the framing error was due to the next start bit, so it samples this 'start' bit twice and then takes in the 'data'.

Bit 4

Break Interrupt (BI). Bit 4 is set to a logic "1" whenever the received data input is held in the Spacing state (logic "0") for longer than a full word transmission time (that is, the total time of the start bit + data bits + parity bits + stop bits). The BI is reset after the CPU reads the contents of the Line Status Register. In the FIFO mode this error is associated with the particular character in the FIFO it applies to. This error is indicated when the associated character is at the top of the FIFO. When break occurs only one zero character is loaded into the FIFO. Restarting after a break is received, requires the serial data (RXD) to be logic "1" for at least ½ bit time.

Note:	Bits 1 through 4 are the error conditions that produce a Receiver Line Status Interrupt whenever any of the corresponding conditions are detected and the interrupt is enabled.

Bit 5

Transmitter Holding Register Empty (THRE). Bit 5 indicates that the Serial Port is ready to accept a new character for transmission. In addition, this bit causes the Serial Port to issue an interrupt when the Transmitter Holding Register interrupt enable is set high. The THRE bit is set to a logic "1" when a character is transferred from the Transmitter Holding Register into the Transmitter Shift Register. The bit is reset to logic "0" whenever the CPU loads the Transmitter Holding Register. In the FIFO mode this bit is set when the XMIT FIFO is empty, it is cleared when at least 1 byte is written to the XMIT FIFO. Bit 5 is a read only bit.

Bit 6

Transmitter Empty (TEMT). Bit 6 is set to a logic "1" whenever the Transmitter Holding Register (THR) and Transmitter Shift Register (TSR) are both empty. It is reset to logic "0" whenever either the THR or TSR contains a data character. Bit 6 is a read only bit. In the FIFO mode this bit is set whenever the THR and TSR are both empty,

© 2016-2017 Microchip Technology Inc.

Bit 7

This bit is permanently set to logic “0” in the 450 mode. In the FIFO mode, this bit is set to a logic “1” when there is at least one parity error, framing error or break indication in the FIFO. This bit is cleared when the LSR is read if there are no subsequent errors in the FIFO.

6.1.9 MODEM STATUS REGISTER (MSR)

Address Offset = 6H, DLAB = X, READ/WRITE

This 8 bit register provides the current state of the control lines from the MODEM (or peripheral device). In addition to this current state information, four bits of the MODEM Status Register (MSR) provide change information. These bits are set to logic “1” whenever a control input from the MODEM changes state. They are reset to logic “0” whenever the MODEM Status Register is read.

Bit 0

Delta Clear To Send (DCTS). Bit 0 indicates that the nCTS input to the chip has changed state since the last time the MSR was read.

Bit 1

Delta Data Set Ready (DDSR). Bit 1 indicates that the nDSR input has changed state since the last time the MSR was read.

Bit 2

Trailing Edge of Ring Indicator (TERI). Bit 2 indicates that the nRI input has changed from logic “0” to logic “1”.

Bit 3

Delta Data Carrier Detect (DDCD). Bit 3 indicates that the nDCD input to the chip has changed state.

Note:	Whenever bit 0, 1, 2, or 3 is set to a logic “1”, a MODEM Status Interrupt is generated.

Bit 4

This bit is the complement of the Clear To Send (nCTS) input. If bit 4 of the MCR is set to logic “1”, this bit is equivalent to nRTS in the MCR.

Bit 5

This bit is the complement of the Data Set Ready (nDSR) input. If bit 4 of the MCR is set to logic “1”, this bit is equivalent to DTR in the MCR.

Bit 6

This bit is the complement of the Ring Indicator (nRI) input. If bit 4 of the MCR is set to logic “1”, this bit is equivalent to OUT1 in the MCR.

Bit 7

This bit is the complement of the Data Carrier Detect (nDCD) input. If bit 4 of the MCR is set to logic “1”, this bit is equivalent to OUT2 in the MCR.

6.1.10 SCRATCHPAD REGISTER (SCR)

Address Offset =7H, DLAB =X, READ/WRITE

This 8 bit read/write register has no effect on the operation of the Serial Port. It is intended as a scratchpad register to be used by the programmer to hold data temporarily.

6.1.11 PROGRAMMABLE BAUD RATE GENERATOR (AND DIVISOR LATCHES DLH, DLL)

The Serial Port contains a programmable Baud Rate Generator that is capable of dividing the internal PLL clock by any divisor from 1 to 65535. The internal PLL clock is divided down to generate a 1.8462MHz frequency for Baud Rates less than 38.4k, a 1.8432MHz frequency for 115.2k, a 3.6864MHz frequency for 230.4k and a 7.3728MHz frequency for 460.8k. This output frequency of the Baud Rate Generator is 16x the Baud rate. Two 8 bit latches store the divisor in 16 bit binary format. These Divisor Latches must be loaded during initialization in order to insure desired operation of the Baud Rate Generator. Upon loading either of the Divisor Latches, a 16 bit Baud counter is immediately loaded. This prevents long counts on initial load. If a 0 is loaded into the BRG registers the output divides the clock by the number 3.

If a 1 is loaded the output is the inverse of the input oscillator. If a two is loaded the output is a divide by 2 signal with a 50% duty cycle. If a 3 or greater is loaded the output is low for 2 bits and high for the remainder of the count. The input clock to the BRG is a 1.8462 MHz clock.

Programming High Speed Serial Port baud Rates

The SCH322x family of devices supports serial ports with speeds up to 1.5Mb/s. Changing the serial ports baud rates between standard speeds (115k baud and slower) during runtime is possible with standard drivers. In order to change baud rates to high speed (230k, 460k, 921k and 1.5M bauds) on the SCH322x devices during runtime, registers in both Configuration space and Runtime space must be programmed.

Note that this applies only if the application requires a serial port baud rate to change during runtime. Standard windows drivers could be used to select the specific high speed rate if it will remain unchanged during runtime Table 6-4 on page 45 shows the baud rates possible.

6.1.12 EFFECT OF THE RESET ON THE REGISTER FILE

The Reset Function (details the effect of the Reset input on each of the registers of the Serial Port.

6.1.13 FIFO INTERRUPT MODE OPERATION

When the RCVR FIFO and receiver interrupts are enabled (FCR bit 0 = “1”, IER bit 0 = “1”), RCVR interrupts occur as follows:

- The receive data available interrupt will be issued when the FIFO has reached its programmed trigger level; it is cleared as soon as the FIFO drops below its programmed trigger level.
- The IIR receive data available indication also occurs when the FIFO trigger level is reached. It is cleared when the FIFO drops below the trigger level.
- The receiver line status interrupt (IIR=06H), has higher priority than the received data available (IIR=04H) interrupt.
- The data ready bit (LSR bit 0) is set as soon as a character is transferred from the shift register to the RCVR FIFO. It is reset when the FIFO is empty.

When RCVR FIFO and receiver interrupts are enabled, RCVR FIFO timeout interrupts occur as follows:

- A FIFO timeout interrupt occurs if all the following conditions exist:

At least one character is in the FIFO.

The most recent serial character received was longer than 4 continuous character times ago. (If 2 stop bits are programmed, the second one is included in this time delay).

The most recent CPU read of the FIFO was longer than 4 continuous character times ago.

This will cause a maximum character received to interrupt issued delay of 160 msec at 300 BAUD with a 12-bit character.

- Character times are calculated by using the RCLK input for a clock signal (this makes the delay proportional to the baud rate).
- When a timeout interrupt has occurred it is cleared and the timer reset when the CPU reads one character from the RCVR FIFO.
- When a timeout interrupt has not occurred the timeout timer is reset after a new character is received or after the CPU reads the RCVR FIFO.

When the XMIT FIFO and transmitter interrupts are enabled (FCR bit 0 = “1”, IER bit 1 = “1”), XMIT interrupts occur as follows:

- The transmitter holding register interrupt (02H) occurs when the XMIT FIFO is empty; it is cleared as soon as the transmitter holding register is written to (1 of 16 characters may be written to the XMIT FIFO while servicing this interrupt) or the IIR is read.
- The transmitter FIFO empty indications will be delayed 1 character time minus the last stop bit time whenever the following occurs: THRE=1 and there have not been at least two bytes at the same time in the transmitter FIFO since the last THRE=1. The transmitter interrupt after changing FCR0 will be immediate, if it is enabled.

Character timeout and RCVR FIFO trigger level interrupts have the same priority as the current received data available interrupt; XMIT FIFO empty has the same priority as the current transmitter holding register empty interrupt.

© 2016-2017 Microchip Technology Inc.

6.1.14 FIFO POLLED MODE OPERATION

With FCR bit 0 = “1” resetting IER bits 0, 1, 2 or 3 or all to zero puts the UART in the FIFO Polled Mode of operation. Since the RCVR and XMITTER are controlled separately, either one or both can be in the polled mode of operation. In this mode, the user’s program will check RCVR and XMITTER status via the LSR. LSR definitions for the FIFO Polled Mode are as follows:

Bit 0=1 as long as there is one byte in the RCVR FIFO.

Bits 1 to 4 specify which error(s) have occurred. Character error status is handled the same way as when in the interrupt mode, the IIR is not affected since EIR bit 2=0.

Bit 5 indicates when the XMIT FIFO is empty.

Bit 6 indicates that both the XMIT FIFO and shift register are empty.

Bit 7 indicates whether there are any errors in the RCVR FIFO.

There is no trigger level reached or timeout condition indicated in the FIFO Polled Mode, however, the RCVR and XMIT FIFOs are still fully capable of holding characters.

6.1.15 FREQUENCY SELECTION

Each Serial Port mode register (at offset 0xF0 in Logical devices 0x4, 0x5, 0xB - 0xE) the frequency is selected as shown in Table 6-3.

TABLE 6-3: SERIAL PORTS MODE REGISTER

Serial Port 1-6 Mode Register Default = 0x00 on VCC POR, VTR POR and PCI RESET	0xF0 R/W In all of the SP Logical Devices	Bit[0] MIDI Mode = 0 MIDI support disabled (default) = 1 MIDI support enabled Bit[1] High Speed = 0 High Speed Disabled (default) = 1 High Speed Enabled Bit [3:2] Enhanced Frequency Select = 00 Standard Mode (default) = 01 Select 921K = 10 Select 1.5M = 11 Reserved Bit[7:4] Refer to Section 6.3, "Interrupt Sharing" for more detail.

Figure 6-2 illustrates the effect of programming bits[3:0] of the Mode register (at offset 0xF0 in the respective logical device) on the Baud rate. Table 6-4 summarizes this functionality.

TABLE 6-4: BAUD RATES

Desired Baud Rate	Divisor Used to Generate 16X Clock				Percent Error Difference Between Desired and Actual Note 6-2	Midi Mode	High Speed	Enhanced Frequency Select Bit	
	Bit 15	Bit14	Bit13	Bits[12:0]		Bit[0]	Bit[1]	Bit[2]	Bit[3]
50	0	0	0	2304	0.001	0	0	X	X
75	0	0	0	1536	-	0	0	X	X
110	0	0	0	1047	-	0	0	X	X
134.5	0	0	0	857	0.004	0	0	X	X
150	0	0	0	768	-	0	0	X	X
300	0	0	0	384	-	0	0	X	X
600	0	0	0	192	-	0	0	X	X
1200	0	0	0	96	-	0	0	X	X
1800	0	0	0	64	-	0	0	X	X
2000	0	0	0	58	0.005	0	0	X	X

TABLE 6-4: BAUD RATES (CONTINUED)

Desired Baud Rate	Divisor Used to Generate 16X Clock				Percent Error Difference Between Desired and Actual Note 6-2	Midi Mode	High Speed	Enhanced Frequency Select Bit	
	Bit 15	Bit14	Bit13	Bits[12:0]		Bit[0]	Bit[1]	Bit[2]	Bit[3]
2400	0	0	0	48	-	0	0	X	X
3600	0	0	0	32	-	0	0	X	X
4800	0	0	0	24	-	0	0	X	X
7200	0	0	0	16	-	0	0	X	X
9600	0	0	0	12	-	0	0	X	X
19200	0	0	0	6	-	0	0	X	X
38400	0	0	0	3	0.030	0	0	X	X
57600	0	0	0	2	0.16	0	0	X	X
115200	0	0	0	1	0.16	0	0	X	X
230400	1	0	0	2	0.16	0	1	X	X
460800	1	0	0	1	0.16	0	1	X	X
921600	1	1	0	1	0.16	0	1	1	X
1500000	0	0	1	1	0.16	0	X	X	1
31250 (Note 6-1)				4	0.16	1	0	0	0

Note 6-1 31250 Khz is the MIDI frequency. It is possible to program other baud rates when the MIDI bit is set by changing the divisor register, but the device will not be midi compliant.

Note 6-2 The percentage error for all baud rates, except where indicated otherwise, is 0.2%.

FIGURE 6-2: BAUD RATE SELECTION

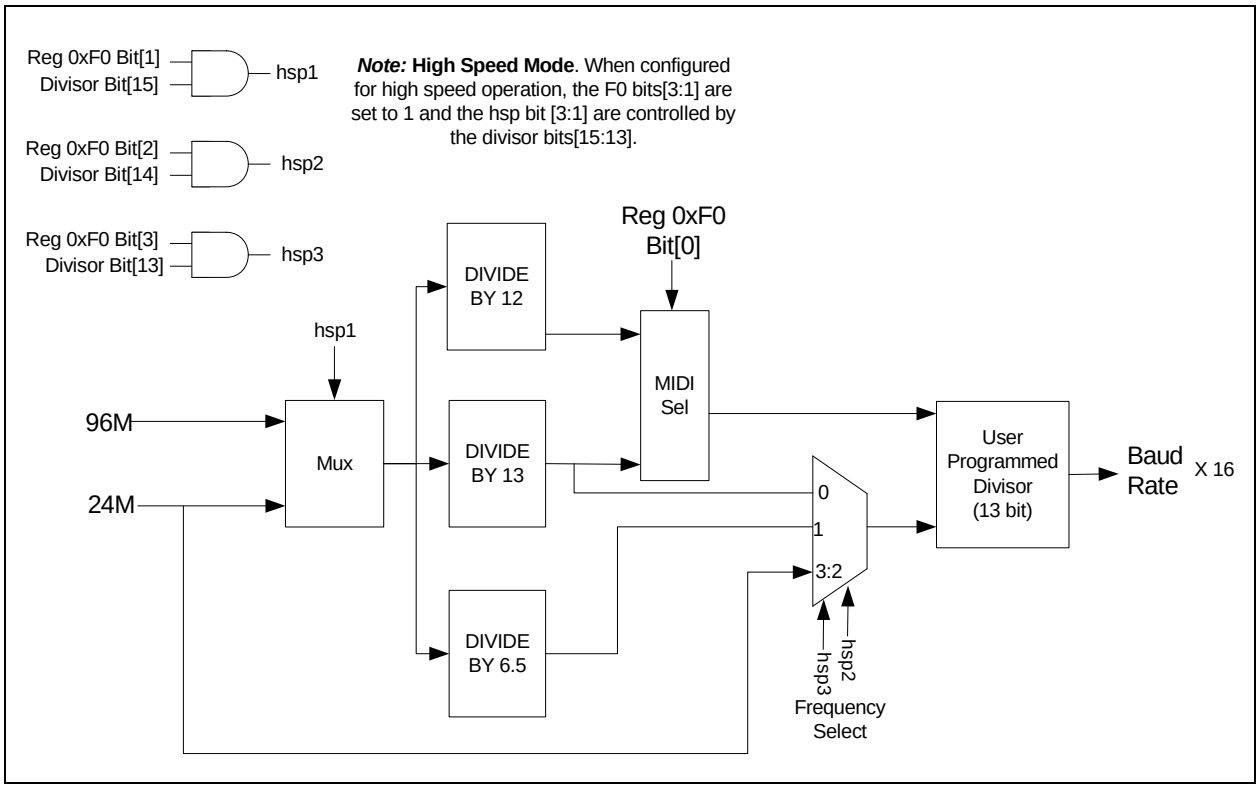

© 2016-2017 Microchip Technology Inc.

TABLE 6-5: REGISTER RESET

Register Bit	Reset Control	Reset State
Interrupt Enable Register	RESET	All bits low
Interrupt Identification Reg.	RESET	Bit 0 is high; Bits 1 - 7 low
FIFO Control	RESET	All bits low
Line Control Reg.	RESET	All bits low
MODEM Control Reg.	RESET	All bits low
Line Status Reg.	RESET	All bits low except 5, 6 high
MODEM Status Reg.	RESET	Bits 0 - 3 low; Bits 4 - 7 input
INTRPT (RCVR errs)	RESET/Read LSR	Low
INTRPT (RCVR Data Ready)	RESET/Read RBR	Low
INTRPT (THRE)	RESET/Read IIR/Write THR	Low
RCVR FIFO	RESET/ FCR1*FCR0/_FCR0	All Bits Low
XMIT FIFO	RESET/ FCR1*FCR0/_FCR0	All Bits Low

TABLE 6-6: PIN RESET

Pin Signal	Reset Control	Reset State
TXDn	RESET	High-Z (Note 6-3)
nRTSx	RESET	High-Z (Note 6-3)
nDTRx	RESET	High-Z (Note 6-3)

Note 6-3 Serial ports 1 and 2 may be placed in the powerdown mode by clearing the associated activate bit located at CR30 or by clearing the associated power bit located in the Power Control register at CR22. Serial ports 3,4,5,6 (if available) may be placed in the powerdown mode by clearing the associated activate bit located at CR30. When in the powerdown mode, the serial port outputs are tristated. In cases where the serial port is multiplexed as an alternate function, the corresponding output will only be tristated if the serial port is the selected alternate function.

TABLE 6-7: REGISTER SUMMARY FOR AN INDIVIDUAL UART CHANNEL

Register Address (Note 6-4)	Register Name	Register Symbol	Bit 7	Bit 6	Bit 5	Bit 4	Bit 3	Bit 2	Bit 1	Bit 0
ADDR = 0 DLAB = 0	Receive Buffer Register (Read Only)	RBR	Data Bit 7	Data Bit 6	Data Bit 5	Data Bit 4	Data Bit 3	Data Bit 2	Data Bit 1	Data Bit 0 (Note 6-5)
ADDR = 0 DLAB = 0	Transmitter Holding Register (Write Only)	THR	Data Bit 7	Data Bit 6	Data Bit 5	Data Bit 4	Data Bit 3	Data Bit 2	Data Bit 1	Data Bit 0
ADDR = 1 DLAB = 0	Interrupt Enable Register	IER	0	0	0	0	Enable MODEM Status Interrupt (EMSI)	Enable Receiver Line Status Interrupt (ELSI)	Enable Transmitter Holding Register Empty Interrupt (ETHREI)	Enable Received Data Available Interrupt (ERDAI)
ADDR = 2	Interrupt Ident. Register (Read Only)	IIR	FIFOs Enabled (Note 6-9)	FIFOs Enabled (Note 6)	0	0	Interrupt ID Bit (Note 6-9)	Interrupt ID Bit	Interrupt ID Bit	"0" if Interrupt Pending
ADDR = 2	FIFO Control Register (Write Only)	FCR (Note 6-11)	RCVR Trigger MSB	RCVR Trigger LSB	Reserved	Reserved	DMA Mode Select (Note 6-10)	XMIT FIFO Reset	RCVR FIFO Reset	FIFO Enable
ADDR = 3	Line Control Register	LCR	Divisor Latch Access Bit (DLAB)	Set Break	Stick Parity	Even Parity Select (EPS)	Parity Enable (PEN)	Number of Stop Bits (STB)	Word Length Select Bit 1 (WLS1)	Word Length Select Bit 0 (WLS0)
ADDR = 4	MODEM Control Register	MCR	0	0	0	Loop	OUT2 (Note 6-7)	OUT1 (Note 6-7)	Request to Send (RTS)	Data Terminal Ready (DTR)
ADDR = 5	Line Status Register	LSR	Error in RCVR FIFO (Note 6-9)	Transmitter Empty (TEMT) (Note 6-6)	Transmitter Holding Register (THRE)	Break Interrupt (BI)	Framing Error (FE)	Parity Error (PE)	Overrun Error (OE)	Data Ready (DR)
ADDR = 6	MODEM Status Register	MSR	Data Carrier Detect (DCD)	Ring Indicator (RI)	Data Set Ready (DSR)	Clear to Send (CTS)	Delta Data Carrier Detect (DDCD)	Trailing Edge Ring Indicator (TERI)	Delta Data Set Ready (DDSR)	Delta Clear to Send (DCTS)
ADDR = 7	Scratch Register (Note 6-8)	SCR	Bit 7	Bit 6	Bit 5	Bit 4	Bit 3	Bit 2	Bit 1	Bit 0

© 2016-2017 Microchip Technology Inc.

TABLE 6-7: REGISTER SUMMARY FOR AN INDIVIDUAL UART CHANNEL (CONTINUED)

Register Address (Note 6-4)	Register Name	Register Symbol	Bit 7	Bit 6	Bit 5	Bit 4	Bit 3	Bit 2	Bit 1	Bit 0
ADDR = 0 DLAB = 1	Divisor Latch (LS)	DDL	Bit 7	Bit 6	Bit 5	Bit 4	Bit 3	Bit 2	Bit 1	Bit 0
ADDR = 1 DLAB = 1	Divisor Latch (MS)	DLM	Bit 15	Bit 14	Bit 13	Bit 12	Bit 11	Bit 10	Bit 9	Bit 8

Note 6-4 DLAB is Bit 7 of the Line Control Register (ADDR = 3).

Note 6-5 Bit 0 is the least significant bit. It is the first bit serially transmitted or received.

Note 6-6 When operating in the XT mode, this bit will be set any time that the transmitter shift register is empty.

Note 6-7 This bit no longer has a pin associated with it.

Note 6-8 When operating in the XT mode, this register is not available.

Note 6-9 These bits are always zero in the non-FIFO mode.

Note 6-10 Writing a one to this bit has no effect. DMA modes are not supported in this chip.

Note 6-11 The UARTs FCR's are shadowed UART FIFO Control Shadow Registers. See Section 24.0, "Runtime Register" for more details.

© 2016-2017 Microchip Technology Inc.

6.1.16 NOTES ON SERIAL PORT OPERATION

FIFO Mode Operation:

General

The RCVR FIFO will hold up to 16 bytes regardless of which trigger level is selected.

6.1.16.1 TX and RX FIFO Operation

The Tx portion of the UART transmits data through TXD as soon as the CPU loads a byte into the Tx FIFO. The UART will prevent loads to the Tx FIFO if it currently holds 16 characters. Loading to the Tx FIFO will again be enabled as soon as the next character is transferred to the Tx shift register. These capabilities account for the largely autonomous operation of the Tx.

The UART starts the above operations typically with a Tx interrupt. The chip issues a Tx interrupt whenever the Tx FIFO is empty and the Tx interrupt is enabled, except in the following instance. Assume that the Tx FIFO is empty and the CPU starts to load it. When the first byte enters the FIFO the Tx FIFO empty interrupt will transition from active to inactive. Depending on the execution speed of the service routine software, the UART may be able to transfer this byte from the FIFO to the shift register before the CPU loads another byte. If this happens, the Tx FIFO will be empty again and typically the UART's interrupt line would transition to the active state. This could cause a system with an interrupt control unit to record a Tx FIFO empty condition, even though the CPU is currently servicing that interrupt. Therefore, after the first byte has been loaded into the FIFO the UART will wait one serial character transmission time before issuing a new Tx FIFO empty interrupt. This one character Tx interrupt delay will remain active until at least two bytes have been loaded into the FIFO, concurrently. When the Tx FIFO empties after this condition, the Tx interrupt will be activated without a one character delay.

Rx support functions and operation are quite different from those described for the transmitter. The Rx FIFO receives data until the number of bytes in the FIFO equals the selected interrupt trigger level. At that time if Rx interrupts are enabled, the UART will issue an interrupt to the CPU. The Rx FIFO will continue to store bytes until it holds 16 of them. It will not accept any more data when it is full. Any more data entering the Rx shift register will set the Overrun Error flag. Normally, the FIFO depth and the programmable trigger levels will give the CPU ample time to empty the Rx FIFO before an overrun occurs.

One side-effect of having a Rx FIFO is that the selected interrupt trigger level may be above the data level in the FIFO. This could occur when data at the end of the block contains fewer bytes than the trigger level. No interrupt would be issued to the CPU and the data would remain in the UART. To prevent the software from having to check for this situation the chip incorporates a timeout interrupt.

The timeout interrupt is activated when there is a least one byte in the Rx FIFO, and neither the CPU nor the Rx shift register has accessed the Rx FIFO within 4 character times of the last byte. The timeout interrupt is cleared or reset when the CPU reads the Rx FIFO or another character enters it.

These FIFO related features allow optimization of CPU/UART transactions and are especially useful given the higher baud rate capability (256 kbaud).

6.1.16.2 TXD2 Pin

The TXD2 signal is located on the GP53/TXD2(IRTX) pin. The operation of this pin following a power cycle is defined in Section 6.2.1, "IR Transmit Pin," on page 51.

6.2 Infrared Interface

The infrared interface provides a two-way wireless communications port using infrared as a transmission medium. Two IR implementations have been provided for the second UART in this chip (logical device 5), IrDA and Amplitude Shift Keyed IR. The IR transmission can use the standard UART2 TXD2 and RXD2 pins. These can be selected through the configuration registers.

IrDA 1.0 allows serial communication at baud rates up to 115.2 kbps. Each word is sent serially beginning with a zero value start bit. A zero is signaled by sending a single IR pulse at the beginning of the serial bit time. A one is signaled by sending no IR pulse during the bit time. Please refer to the AC timing for the parameters of these pulses and the IrDA waveform.

The Amplitude Shift Keyed IR allows asynchronous serial communication at baud rates up to 19.2K Baud. Each word is sent serially beginning with a zero value start bit. A zero is signaled by sending a 500KHz waveform for the duration of the serial bit time. A one is signaled by sending no transmission during the bit time. Please refer to the AC timing for the parameters of the ASK-IR waveform.

© 2016-2017 Microchip Technology Inc.

If the Half Duplex option is chosen, there is a time-out when the direction of the transmission is changed. This time-out starts at the last bit transferred during a transmission and blocks the receiver input until the timeout expires. If the transmit buffer is loaded with more data before the time-out expires, the timer is restarted after the new byte is transmitted. If data is loaded into the transmit buffer while a character is being received, the transmission will not start until the time-out expires after the last receive bit has been received. If the start bit of another character is received during this time-out, the timer is restarted after the new character is received. The IR half duplex time-out is programmable via CRF2 in Logical Device 5. This register allows the time-out to be programmed to any value between 0 and 10msec in 100usec increments.

FIGURE 6-3: BLOCK DIAGRAM OF THE IR COMPONENTS IN THE SCH3227/SCH3226/SCH3224/SCH3222

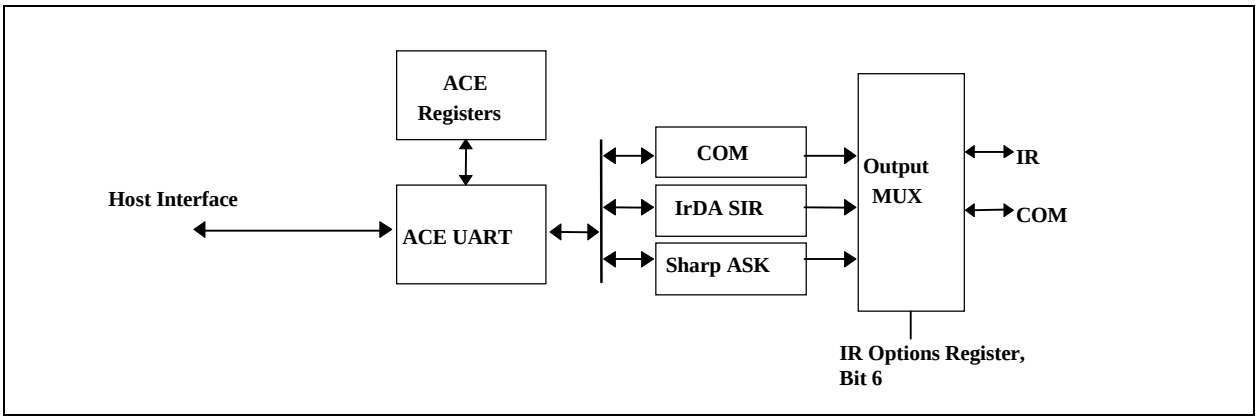

6.2.1 IR TRANSMIT PIN

The following description describes the state of the GP53/TXD2(IRTX) pin following a power cycle.

GP53/TXD2(IRTX) Pin. This pin defaults to the GPIO input function on a VTR POR.

The GP53/TXD2(IRTX) pin will be tristate following a VCC POR, VTR POR, Soft Reset, or PCI Reset when it is configured for the TXD2 (IRTX) function. It will remain tristate until the UART is powered. Once the UART is powered, the state of the pin will be determined by the UART block. If VCC>2.4V and GP53 function is selected the pin will reflect the current state of GP53.

Note:	External hardware should be implemented to protect the transceiver when the IRTX2 pin is tristated.

6.3 Interrupt Sharing

Multiple sharing options are available are for the SCH322x devices. Sharing an interrupt requires the following:

1. Configure the UART to be the generator to the desired IRQ.
2. Configure other shared UARTs to use No IRQ selected.
3. Set the desired share IRQ bit.

APPLICATION NOTE: If both UARTs are configured to use different IRQs and the share IRQ bit is set, then both of the UART IRQs will assert when either UART generates an interrupt.

Table 6-8, summarizes the various IRQ sharing configurations. In this table, the following nomenclature is used:

- N/A - not applicable
- NS - port not shared
- S12 - uart 1 and uart 2 share an IRQ
- S34 - uart 3 and uart 4 share an IRQ
- S56 - uart 5 and uart 6 share an IRQ
- S1234 - UARTS 1,2,3,4 share the same IRQ

- S1256 - UARTS 1,2,5,6 share the same IRQ
- S3456 - UARTS 3,4,5,6 share the same IRQ
- S123456 - all uarts share the same IRQ

TABLE 6-8: SCH3227/SCH3226/SCH3224/SCH3222 IRQ SHARING SUMMARY

Device	SP1 Mode Reg (0xF0) Bit6 All Share Bit	SP1 Mode Reg (0xF0) Bit7 SP12 Share Bit	SP3 Mode Reg (0xF0) Bit7 SP34 Share Bit	SP5 Mode Reg (0xF0) Bit7 SP56 Share Bit	SP1	SP2	SP3	SP4	SP5	SP6
SCH3224	0	0	N/A	0	NS	NS	N/A	N/A	NS	NS
	0	1	N/A	0	S12	S12	N/A	N/A	NS	NS
	0	0	N/A	1	NS	NS	N/A	N/A	S56	S56
	0	1	N/A	1	S12	S12	N/A	N/A	S56	S56
	1	0	N/A	0	NS	NS	N/A	N/A	NS	NS
	1	1	N/A	0	S12	S12	N/A	N/A	NS	NS
	1	0	N/A	1	NS	NS	N/A	N/A	S56	S56
	1	1	N/A	1	S1256	S1256	N/A	N/A	S1256	S1256
STRAPOPT=0, SCH3227 / SCH3226	0	0	0	N/A	NS	NS	NS	NS	N/A	N/A
	0	1	0	N/A	S12	S12	NS	NS	N/A	N/A
	0	0	1	N/A	NS	NS	S34	S34	N/A	N/A
	0	1	1	N/A	S12	S12	S34	S34	N/A	N/A
	1	0	0	N/A	NS	NS	NS	NS	N/A	N/A
	1	1	0	N/A	S12	S12	NS	NS	N/A	N/A
	1	0	1	N/A	NS	NS	S34	S34	N/A	N/A
	1	1	1	N/A	S1234	S1234	S1234	S1234	N/A	N/A
SCH3222, STRAPOPT=1, SCH3227 / SCH3226	0	0	0	0	NS	NS	NS	NS	NS	NS
	0	1	0	0	S12	S12	NS	NS	NS	NS
	0	0	1	0	NS	NS	S34	S34	NS	NS
	0	1	1	0	S12	S12	S34	S34	NS	NS
	0	0	0	1	NS	NS	NS	NS	S56	S56
	0	1	0	1	S12	S12	NS	NS	S56	S56
	0	0	1	1	NS	NS	S34	S34	S56	S56
	0	1	1	1	S12	S12	S34	S34	S56	S56
	1	0	0	0	NS	NS	NS	NS	NS	NS
	1	1	0	0	S12	S12	NS	NS	NS	NS
	1	0	1	0	NS	NS	S34	S34	NS	NS
	1	1	1	0	S1234	S1234	S1234	S1234	NS	NS
	1	0	0	1	NS	NS	NS	NS	S56	S56
	1	1	0	1	S1256	S1256	NS	NS	S1256	S1256
	1	0	1	1	NS	NS	S3456	S3456	S3456	S3456
	1	1	1	1	S123456	S123456	S123456	S123456	S123456	S123456

© 2016-2017 Microchip Technology Inc.

6.4 RS485 Auto Direction Control

The purpose of this function is to save the effort to deal with direction control in software. A direction control signal (usually nRTS) is used to tristate the transmitter when no other data is available, so that other nodes can use the shared lines. It is preferred to have this function on all six serial ports.

This will affect the nRTS and nDTR signals for each serial port in the device. Each serial port will have the following additional characteristics:

- An option register for the serial port in the runtime registers with following bits:
  - An enable bit to turn on/off the direction control
  - An enable bit to select which bit nRTS or nDTR, of the serial port is affected.
  - A bit to select the polarity - high or low, that the selected signal is driven to when the output buffer of the corresponding serial port is empty or full.
- When automatic direction control is enabled, the device monitors the local output buffer for not empty and empty conditions. If enabled, the direction control will force the nRTS or nDTR signal (selected via programming) to the desired polarity under the empty or not empty condition. Table 6-9 summarizes the possible programming states.
- Automatic Direction Control of the serial ports is only valid when the FIFO is enabled.
- The multi-function GPIO pins do not automatically set the direction when selected as serial port pins.
- The high speed baud rates will only work if the MSB of the MS divisor is set.

TABLE 6-9: NRTS/NDTR AUTOMATIC DIRECTION CONTROL OPTIONS

Local TX Buffer State	Flow Count EN Bit	NRTS/NDTR SEL Bit	Polarity SEL Bit	NRTS	NDTR
X	0	X	X	N/A	N/A
empty	1	1	0	0	N/A
empty	1	1	1	1	N/A
not empty	1	1	0	1	N/A
not empty	1	1	1	0	N/A
empty	1	0	0	N/A	0
empty	1	0	1	N/A	1
not empty	1	0	0	N/A	1
not empty	1	0	1	N/A	0

Note: Note that N/A indicates the signal is not affected under these conditions and maintains normal operation.

A typical application using HW automatic direction control is shown in the following FIGURE 6-4: on page 54. In this figure the nRTS signal is used to control direction.

FIGURE 6-4: HALF DUPLEX OPERATION WITH DIRECTION CONTROL

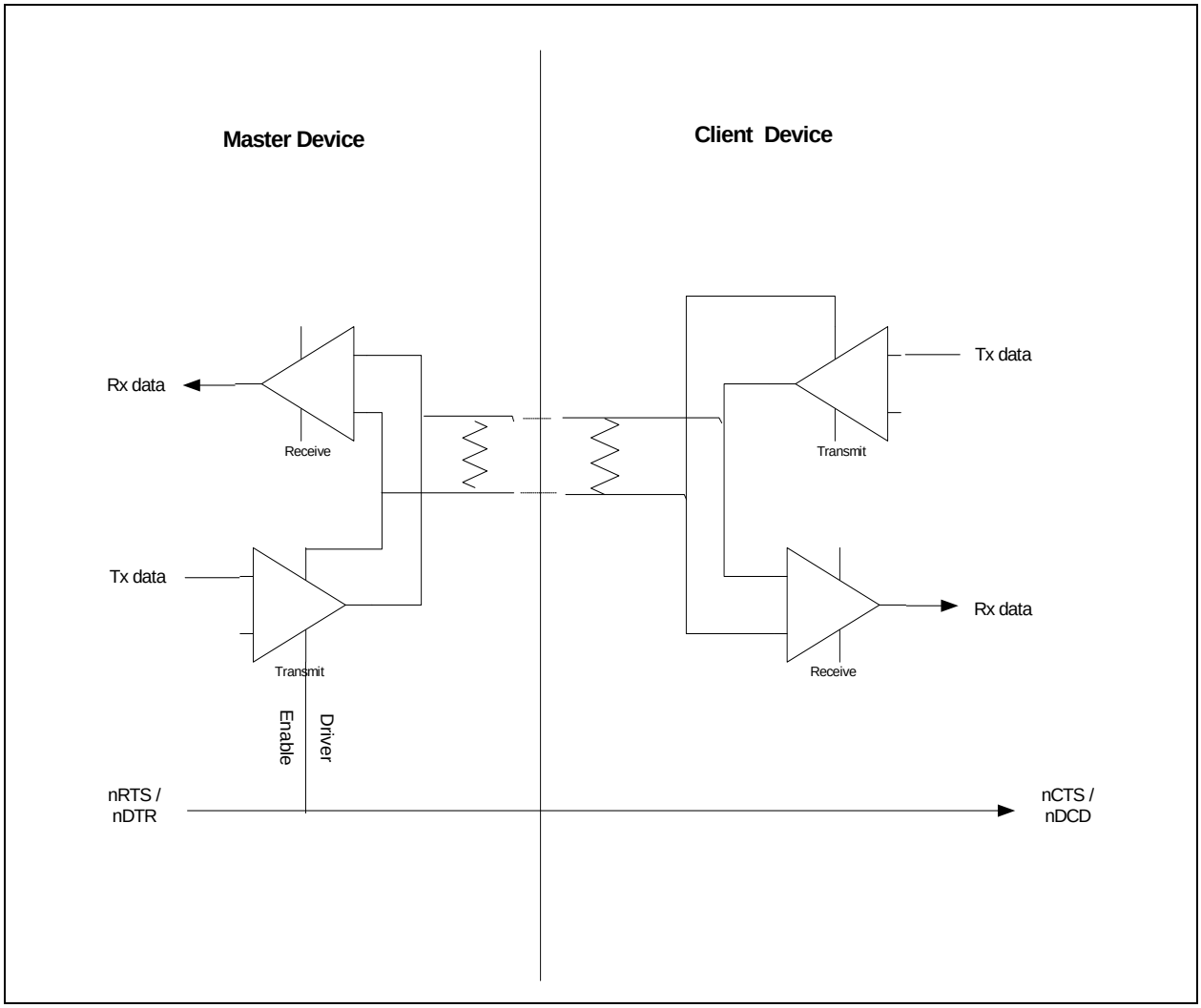

More detail on the programming of the autodirection control can be found in Section 24.0, "Runtime Register," on page 213. SP12 is the option register for Serial Port 1 and 2. SP34 is the option register for Serial Port 3 and 4. SP5 is the option register for Serial Port 5. SP6 is the option register for Serial Port 6.

6.5 Reduced Pin Serial Ports

The SCH322x family provides for two, 4 pin serial ports (UARTs 5 and 6), which have multiplexed control signals. For each 4 pin port, there is a transmit, receive, input control and output control. The selection of the input and output control is done via a bit in the SP5/6 option register. Figure 6-5 illustrates the how programming these bits selects the corresponding control signals.

© 2016-2017 Microchip Technology Inc.

FIGURE 6-5: REDUCE PIN SERIAL PORT CONTROL SIGNAL SELECTION

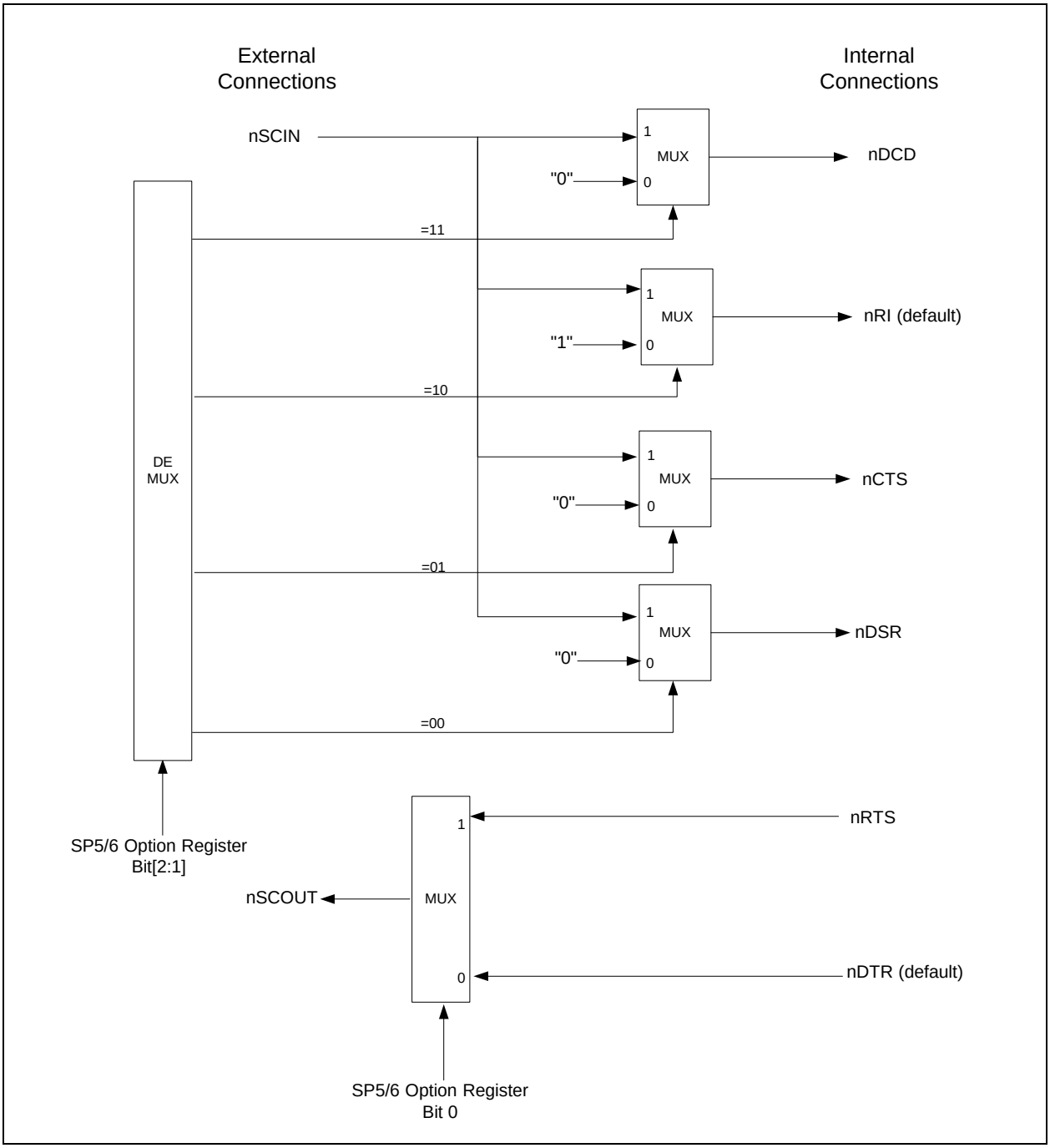

For SP5, the port signals are nRTS5, nDTR5, nSCOUT5 and nSCIN5. The nSCOUT5 signal may be either nRTS5 or nDTR5, selected via an SP5 option bit in a register.

The nSCIN5 signal may be either the nDSR5, nCTS5, nRI5 or nDCD5 signals, as selected via a bit in the SP5 option register.

For SP6, the nSCOUT6 signal may be either nRTS6 or nDTR6, selected via SP6 option bit. The nSCIN6 signal may be either the nDSR6, nCTS6, nRI6 or nDCD6 signals, as selected via a bit in theSP6 option register. The programming for the SP5 and SP6 Option register is given in Section 24.0, "Runtime Register," on page 213.

7.0 PARALLEL PORT

The SCH322x incorporates an IBM XT/AT compatible parallel port. This supports the optional PS/2 type bi-directional parallel port (SPP), the Enhanced Parallel Port (EPP) and the Extended Capabilities Port (ECP) parallel port modes. Refer to the Configuration Registers for information on disabling, power- down, changing the base address of the parallel port, and selecting the mode of operation.

The parallel port also incorporates Microchip's ChiProtect circuitry, which prevents possible damage to the parallel port due to printer power-up.

The functionality of the Parallel Port is achieved through the use of eight addressable ports, with their associated registers and control gating. The control and data port are read/write by the CPU, the status port is read/write in the EPP mode. The address map of the Parallel Port is shown below:

DATA PORT	BASE ADDRESS + 00H
STATUS PORT	BASE ADDRESS + 01H
CONTROL PORT	BASE ADDRESS + 02H
EPP ADDR PORT	BASE ADDRESS + 03H
EPP DATA PORT 0	BASE ADDRESS + 04H
EPP DATA PORT 1	BASE ADDRESS + 05H
EPP DATA PORT 2	BASE ADDRESS + 06H
EPP DATA PORT 3	BASE ADDRESS + 07H

The bit map of these registers is:

	D0	D1	D2	D3	D4	D5	D6	D7	Note
DATA PORT	PD0	PD1	PD2	PD3	PD4	PD5	PD6	PD7	1
STATUS PORT	TMOUT	0	0	nERR	SLCT	PE	nACK	nBUSY	1
CONTROL PORT	STROBE	AUTOFD	nINIT	SLC	IRQE	PCD	0	0	1
EPP ADDR PORT	PD0	PD1	PD2	PD3	PD4	PD5	PD6	PD7	2
EPP DATA PORT 0	PD0	PD1	PD2	PD3	PD4	PD5	PD6	PD7	2
EPP DATA PORT 1	PD0	PD1	PD2	PD3	PD4	PD5	PD6	PD7	2
EPP DATA PORT 2	PD0	PD1	PD2	PD3	PD4	PD5	PD6	PD7	2
EPP DATA PORT 3	PD0	PD1	PD2	PD3	PD4	PD5	PD6	PD7	2

Note 1: These registers are available in all modes.

2: These registers are only available in EPP mode.

TABLE 7-1: PARALLEL PORT CONNECTOR

Host Connector	Pin Number	Standard	EPP	ECP
1	83	nSTROBE	nWrite	nStrobe
2-9	68-75	PD<0:7>	PData<0:7>	PData<0:7>
10	80	nACK	Intr	nAck
11	79	BUSY	nWait	Busy, PeriphAck(3)
12	78	PE	(User Defined)	PError, nAckReverse (3)
13	77	SLCT	(User Defined)	Select
14	82	nALF	nDatastb	nAutoFd, HostAck(3)

© 2016-2017 Microchip Technology Inc.

TABLE 7-1: PARALLEL PORT CONNECTOR (CONTINUED)

Host Connector	Pin Number	Standard	EPP	ECP
15	81	nERROR	(User Defined)	nFault (1) nPeriphRequest (3)
16	66	nINIT	nRESET	nInit(1) nReverseRqst(3)
17	67	nSLCTIN	nAddrstrb	nSelectIn(1,3)
(1) = Compatible Mode (3) = High Speed Mode				

Note: For the cable interconnection required for ECP support and the Slave Connector pin numbers, refer to the *IEEE 1284 Extended Capabilities Port Protocol and ISA Standard, Rev. 1.14*, July 14, 1993. This document is available from Microsoft.

7.1 IBM XT/AT Compatible, Bi-Directional and EPP Modes

7.1.1 DATA PORT

ADDRESS OFFSET = 00H

The Data Port is located at an offset of ‘00H’ from the base address. The data register is cleared at initialization by RESET. During a WRITE operation, the Data Register latches the contents of the internal data bus. The contents of this register are buffered (non inverting) and output onto the PD0 - PD7 ports. During a READ operation in SPP mode, PD0 - PD7 ports are buffered (not latched) and output to the host CPU.

7.1.2 STATUS PORT

ADDRESS OFFSET = 01H

The Status Port is located at an offset of ‘01H’ from the base address. The contents of this register are latched for the duration of a read cycle. The bits of the Status Port are defined as follows:

Bit 0 TMOUT - TIME OUT

This bit is valid in EPP mode only and indicates that a 10 usec time out has occurred on the EPP bus. A logic O means that no time out error has occurred; a logic 1 means that a time out error has been detected. This bit is cleared by a RESET. If the TIMEOUT_SELECT bit (bit 4 of the Parallel Port Mode Register 2, 0xF1 in Logical Device 3 Configuration Registers) is ‘0’, writing a one to this bit clears the TMOUT status bit. Writing a zero to this bit has no effect. If the TIMEOUT_SELECT bit (bit 4 of the Parallel Port Mode Register 2, 0xF1 in Logical Device 3 Configuration Registers) is ‘1’, the TMOUT bit is cleared on the trailing edge of a read of the EPP Status Register.

Bits 1, 2 - are not implemented as register bits, during a read of the Printer Status Register these bits are a low level.

Bit 3 nERR – nERROR

The level on the nERROR input is read by the CPU as bit 3 of the Printer Status Register. A logic 0 means an error has been detected; a logic 1 means no error has been detected.

Bit 4 SLT - Printer Selected Status

The level on the SLCT input is read by the CPU as bit 4 of the Printer Status Register. A logic 1 means the printer is on line; a logic 0 means it is not selected.

Bit 5 PE - Paper End

The level on the PE input is read by the CPU as bit 5 of the Printer Status Register. A logic 1 indicates a paper end; a logic 0 indicates the presence of paper.

Bit 6 nACK - Acknowledge

The level on the nACK input is read by the CPU as bit 6 of the Printer Status Register. A logic 0 means that the printer has received a character and can now accept another. A logic 1 means that it is still processing the last character or has not received the data.

Bit 7 nBUSY - nBUSY

The complement of the level on the BUSY input is read by the CPU as bit 7 of the Printer Status Register. A logic 0 in this bit means that the printer is busy and cannot accept a new character. A logic 1 means that it is ready to accept the next character.

7.1.3 CONTROL PORT

ADDRESS OFFSET = 02H

The Control Port is located at an offset of ‘02H’ from the base address. The Control Register is initialized by the RESET input, bits 0 to 5 only being affected; bits 6 and 7 are hard wired low.

Bit 0 STROBE - Strobe

This bit is inverted and output onto the nSTROBE output.

Bit 1 AUTOFD - Autofeed

This bit is inverted and output onto the nAutoFd output. A logic 1 causes the printer to generate a line feed after each line is printed. A logic 0 means no autofeed.

Bit 2 nINIT - Initiate Output

This bit is output onto the nINIT output without inversion.

Bit 3 SLCTIN - Printer Select Input

This bit is inverted and output onto the nSLCTIN output. A logic 1 on this bit selects the printer; a logic 0 means the printer is not selected.

Bit 4 IRQE - Interrupt Request Enable

The interrupt request enable bit when set to a high level may be used to enable interrupt requests from the Parallel Port to the CPU. An interrupt request is generated on the IRQ port by a positive going nACK input. When the IRQE bit is programmed low the IRQ is disabled.

Bit 5 PCD - PARALLEL CONTROL DIRECTION

Parallel Control Direction is not valid in printer mode. In printer mode, the direction is always out regardless of the state of this bit. In bi-directional, EPP or ECP mode, a logic 0 means that the printer port is in output mode (write); a logic 1 means that the printer port is in input mode (read).

Bits 6 and 7 during a read are a low level, and cannot be written.

7.1.4 EPP ADDRESS PORT

ADDRESS OFFSET = 03H

The EPP Address Port is located at an offset of ‘03H’ from the base address. The address register is cleared at initialization by RESET. During a WRITE operation, the contents of the internal data bus DB0-DB7 are buffered (non inverting) and output onto the PD0 - PD7 ports. An LPC I/O write cycle causes an EPP ADDRESS WRITE cycle to be performed, during which the data is latched for the duration of the EPP write cycle. During a READ operation, PD0 - PD7 ports are read. An LPC I/O read cycle causes an EPP ADDRESS READ cycle to be performed and the data output to the host CPU, the deassertion of ADDRSTB latches the PData for the duration of the read cycle. This register is only available in EPP mode.

7.1.5 EPP DATA PORT 0

ADDRESS OFFSET = 04H

The EPP Data Port 0 is located at an offset of ‘04H’ from the base address. The data register is cleared at initialization by RESET. During a WRITE operation, the contents of the internal data bus DB0-DB7 are buffered (non inverting) and output onto the PD0 - PD7 ports. An LPC I/O write cycle causes an EPP DATA WRITE cycle to be performed, during which the data is latched for the duration of the EPP write cycle. During a READ operation, PD0 - PD7 ports are read. An LPC I/O read cycle causes an EPP READ cycle to be performed and the data output to the host CPU, the deassertion of DATASTB latches the PData for the duration of the read cycle. This register is only available in EPP mode.

7.1.6 EPP DATA PORT 1

ADDRESS OFFSET = 05H

The EPP Data Port 1 is located at an offset of ‘05H’ from the base address. Refer to EPP DATA PORT 0 for a description of operation. This register is only available in EPP mode.

© 2016-2017 Microchip Technology Inc.

7.1.7 EPP DATA PORT 2

ADDRESS OFFSET = 06H

The EPP Data Port 2 is located at an offset of ‘06H’ from the base address. Refer to EPP DATA PORT 0 for a description of operation. This register is only available in EPP mode.

7.1.8 EPP DATA PORT 3

ADDRESS OFFSET = 07H

The EPP Data Port 3 is located at an offset of ‘07H’ from the base address. Refer to EPP DATA PORT 0 for a description of operation. This register is only available in EPP mode.

7.1.9 EPP 1.9 OPERATION

When the EPP mode is selected in the configuration register, the standard and bi-directional modes are also available. If no EPP Read, Write or Address cycle is currently executing, then the PDx bus is in the standard or bi-directional mode, and all output signals (STROBE, AUTOFD, INIT) are as set by the SPP Control Port and direction is controlled by PCD of the Control port.

In EPP mode, the system timing is closely coupled to the EPP timing. For this reason, a watchdog timer is required to prevent system lockup. The timer indicates if more than 10usec have elapsed from the start of the EPP cycle to nWAIT being deasserted (after command). If a time-out occurs, the current EPP cycle is aborted and the time-out condition is indicated in Status bit 0.

During an EPP cycle, if STROBE is active, it overrides the EPP write signal forcing the PDx bus to always be in a write mode and the nWRITE signal to always be asserted.

7.1.10 SOFTWARE CONSTRAINTS

Before an EPP cycle is executed, the software must ensure that the control register bit PCD is a logic “0” (i.e., a 04H or 05H should be written to the Control port). If the user leaves PCD as a logic “1”, and attempts to perform an EPP write, the chip is unable to perform the write (because PCD is a logic “1”) and will appear to perform an EPP read on the parallel bus, no error is indicated.

7.1.11 EPP 1.9 WRITE

The timing for a write operation (address or data) is shown in timing diagram EPP Write Data or Address cycle. The chip inserts wait states into the LPC I/O write cycle until it has been determined that the write cycle can complete. The write cycle can complete under the following circumstances:

- If the EPP bus is not ready (nWAIT is active low) when nDATASTB or nADDRSTB goes active then the write can complete when nWAIT goes inactive high.
- If the EPP bus is ready (nWAIT is inactive high) then the chip must wait for it to go active low before changing the state of nDATASTB, nWRITE or nADDRSTB. The write can complete once nWAIT is determined inactive.

Write Sequence of operation

1. The host initiates an I/O write cycle to the selected EPP register.
2. If WAIT is not asserted, the chip must wait until WAIT is asserted.
3. The chip places address or data on PData bus, clears PDIR, and asserts nWRITE.
4. Chip asserts nDATASTB or nADDRSTRB indicating that PData bus contains valid information, and the WRITE signal is valid.
5. Peripheral deasserts nWAIT, indicating that any setup requirements have been satisfied and the chip may begin the termination phase of the cycle.
6.
   a) The chip deasserts nDATASTB or nADDRSTRB, this marks the beginning of the termination phase. If it has not already done so, the peripheral should latch the information byte now.
   b) The chip latches the data from the internal data bus for the PData bus and drives the sync that indicates that no more wait states are required followed by the TAR to complete the write cycle.
7. Peripheral asserts nWAIT, indicating to the host that any hold time requirements have been satisfied and acknowledging the termination of the cycle.
8. Chip may modify nWRITE and nPDATA in preparation for the next cycle.

7.1.12 EPP 1.9 READ

The timing for a read operation (data) is shown in timing diagram EPP Read Data cycle. The chip inserts wait states into the LPC I/O read cycle until it has been determined that the read cycle can complete. The read cycle can complete under the following circumstances:

- If the EPP bus is not ready (nWAIT is active low) when nDATASTB goes active then the read can complete when nWAIT goes inactive high.
- If the EPP bus is ready (nWAIT is inactive high) then the chip must wait for it to go active low before changing the state of nWRITE or before nDATASTB goes active. The read can complete once nWAIT is determined inactive.

Read Sequence of Operation

1. The host initiates an I/O read cycle to the selected EPP register.
2. If WAIT is not asserted, the chip must wait until WAIT is asserted.
3. The chip tri-states the PData bus and deasserts nWRITE.
4. Chip asserts nDATASTB or nADDRSTRB indicating that PData bus is tri-stated, PDIR is set and the nWRITE signal is valid.
5. Peripheral drives PData bus valid.
6. Peripheral deasserts nWAIT, indicating that PData is valid and the chip may begin the termination phase of the cycle.
7.
   a) The chip latches the data from the PData bus for the internal data bus and deasserts nDATASTB or nADDRSTRB. This marks the beginning of the termination phase.
   b) The chip drives the sync that indicates that no more wait states are required and drives valid data onto the LAD[3:0] signals, followed by the TAR to complete the read cycle.
8. Peripheral tri-states the PData bus and asserts nWAIT, indicating to the host that the PData bus is tri-stated.
9. Chip may modify nWRITE, PDIR and nPDATA in preparation for the next cycle.

7.1.13 EPP 1.7 OPERATION

When the EPP 1.7 mode is selected in the configuration register, the standard and bi-directional modes are also available. If no EPP Read, Write or Address cycle is currently executing, then the PDx bus is in the standard or bi-directional mode, and all output signals (STROBE, AUTOFD, INIT) are as set by the SPP Control Port and direction is controlled by PCD of the Control port.

In EPP mode, the system timing is closely coupled to the EPP timing. For this reason, a watchdog timer is required to prevent system lockup. The timer indicates if more than 10usec have elapsed from the start of the EPP cycle to the end of the cycle. If a time-out occurs, the current EPP cycle is aborted and the time-out condition is indicated in Status bit 0.

7.1.14 SOFTWARE CONSTRAINTS

Before an EPP cycle is executed, the software must ensure that the control register bits D0, D1 and D3 are set to zero. Also, bit D5 (PCD) is a logic “0” for an EPP write or a logic “1” for and EPP read.

7.1.15 EPP 1.7 WRITE

The timing for a write operation (address or data) is shown in timing diagram EPP 1.7 Write Data or Address cycle. The chip inserts wait states into the I/O write cycle when nWAIT is active low during the EPP cycle. This can be used to extend the cycle time. The write cycle can complete when nWAIT is inactive high.

Write Sequence of Operation

- The host sets PDIR bit in the control register to a logic “0”. This asserts nWRITE.
- The host initiates an I/O write cycle to the selected EPP register.
- The chip places address or data on PData bus.
- Chip asserts nDATASTB or nADDRSTRB indicating that PData bus contains valid information, and the WRITE signal is valid.
- If nWAIT is asserted, the chip inserts wait states into I/O write cycle until the peripheral deasserts nWAIT or a time-out occurs.
- The chip drives the final sync, deasserts nDATASTB or nADDRSTRB and latches the data from the internal data bus for the PData bus.
- Chip may modify nWRITE, PDIR and nPDATA in preparation of the next cycle.

© 2016-2017 Microchip Technology Inc.

7.1.16 EPP 1.7 READ

The timing for a read operation (data) is shown in timing diagram EPP 1.7 Read Data cycle. The chip inserts wait states into the I/O read cycle when nWAIT is active low during the EPP cycle. This can be used to extend the cycle time. The read cycle can complete when nWAIT is inactive high.

Read Sequence of Operation

- The host sets PDIR bit in the control register to a logic “1”. This deasserts nWRITE and tri-states the PData bus.
- The host initiates an I/O read cycle to the selected EPP register.
- Chip asserts nDATASTB or nADDRSTRB indicating that PData bus is tri-stated, PDIR is set and the nWRITE signal is valid.
- If nWAIT is asserted, the chip inserts wait states into the I/O read cycle until the peripheral deasserts nWAIT or a time-out occurs.
- The Peripheral drives PData bus valid.
- The Peripheral deasserts nWAIT, indicating that PData is valid and the chip may begin the termination phase of the cycle.
- The chip drives the final sync and deasserts nDATASTB or nADDRSTRB.
- Peripheral tri-states the PData bus.
- Chip may modify nWRITE, PDIR and nPDATA in preparation of the next cycle.

TABLE 7-2: EPP PIN DESCRIPTIONS

EPP Signal	EPP Name	Type	EPP Description
nWRITE	nWrite	O	This signal is active low. It denotes a write operation.
PD<0:7>	Address/Data	I/O	Bi-directional EPP byte wide address and data bus.
INTR	Interrupt	I	This signal is active high and positive edge triggered. (Pass through with no inversion, Same as SPP).
nWAIT	nWait	I	This signal is active low. It is driven inactive as a positive acknowledgement from the device that the transfer of data is completed. It is driven active as an indication that the device is ready for the next transfer.
nDATASTB	nData Strobe	O	This signal is active low. It is used to denote data read or write operation.
nRESET	nReset	O	This signal is active low. When driven active, the EPP device is reset to its initial operational mode.
nADDRSTB	Address Strobe	O	This signal is active low. It is used to denote address read or write operation.
PE	Paper End	I	Same as SPP mode.
SLCT	Printer Selected Status	I	Same as SPP mode.
nERR	Error	I	Same as SPP mode.

Note 1: SPP and EPP can use 1 common register.

2: nWrite is the only EPP output that can be over-ridden by SPP control port during an EPP cycle. For correct EPP read cycles, PCD is required to be a low.

7.2 Extended Capabilities Parallel Port

ECP provides a number of advantages, some of which are listed below. The individual features are explained in greater detail in the remainder of this section.

High performance half-duplex forward and reverse channel Interlocked handshake, for fast reliable transfer Optional single byte RLE compression for improved throughput (64:1) Channel addressing for low-cost peripherals Maintains link and data layer separation Permits the use of active output drivers permits the use of adaptive signal timing Peer-to-peer capability.

7.2.1 VOCABULARY

The following terms are used in this document:

assert: When a signal asserts it transitions to a "true" state, when a signal deasserts it transitions to a "false" state.

forward: Host to Peripheral communication.

reverse: Peripheral to Host communication

Pword: A port word; equal in size to the width of the LPC interface. For this implementation, PWord is always 8 bits.

1 A high level.

0 A low level.

These terms may be considered synonymous:

PeriphClk, nAck

HostAck, nAutoFd

PeriphAck, Busy

nPeriphRequest, nFault

nReverseRequest, nInit

nAckReverse, PError

Xflag, Select

ECPMode, nSelectIn

HostClk, nStrobe

Reference Document: *IEEE 1284 Extended Capabilities Port Protocol and ISA Interface Standard*, Rev. 1.14, July 14, 1993. This document is available from Microsoft.

The bit map of the Extended Parallel Port registers is:

	D7	**D6**	**D5**	**D4**	**D3**	**D2**	**D1**	**D0**	**Note**
data	PD7	PD6	PD5	PD4	PD3	PD2	PD1	PD0	
ecpAFifo	Addr/RLE	Address or RLE field							2
dsr	nBusy	nAck	PError	Select	nFault	0	0	0	1
dcr	0	0	Direction	ackIntEn	SelectIn	nInit	autofd	strobe	1
cFifo	Parallel Port Data FIFO								2
ecpDFifo	ECP Data FIFO								2
tFifo	Test FIFO								2
cnfgA	0	0	0	1	0	0	0	0	
cnfgB	compress	intrValue	Parallel Port IRQ			Parallel Port DMA			
ecr	MODE			nErrIntrEn	dmaEn	serviceI ntr	full	empty	

Note 1: These registers are available in all modes.

2: All FIFOs use one common 16 byte FIFO.

3: The ECP Parallel Port Config Reg B reflects the IRQ and DMA channel selected by the Configuration Registers.

© 2016-2017 Microchip Technology Inc.

7.2.2 ECP IMPLEMENTATION STANDARD

This specification describes the standard interface to the Extended Capabilities Port (ECP). All LPC devices supporting ECP must meet the requirements contained in this section or the port will not be supported by Microsoft. For a description of the ECP Protocol, please refer to the *IEEE 1284 Extended Capabilities Port Protocol and ISA Interface Standard*, *Rev. 1.14*, July 14, 1993. This document is available from Microsoft.

Description

The port is software and hardware compatible with existing parallel ports so that it may be used as a standard LPT port if ECP is not required. The port is designed to be simple and requires a small number of gates to implement. It does not do any “protocol” negotiation, rather it provides an automatic high burst-bandwidth channel that supports DMA for ECP in both the forward and reverse directions.

Small FIFOs are employed in both forward and reverse directions to smooth data flow and improve the maximum bandwidth requirement. The size of the FIFO is 16 bytes deep. The port supports an automatic handshake for the standard parallel port to improve compatibility mode transfer speed.

The port also supports run length encoded (RLE) decompression (required) in hardware. Compression is accomplished by counting identical bytes and transmitting an RLE byte that indicates how many times the next byte is to be repeated. Decompression simply intercepts the RLE byte and repeats the following byte the specified number of times. Hardware support for compression is optional.

TABLE 7-3: ECP PIN DESCRIPTIONS

Name	Type	Description
nStrobe	O	During write operations nStrobe registers data or address into the slave on the asserting edge (handshakes with Busy).
PData 7:0	I/O	Contains address or data or RLE data.
nAck	I	Indicates valid data driven by the peripheral when asserted. This signal handshakes with nAutoFd in reverse.
PeriphAck (Busy)	I	This signal deasserts to indicate that the peripheral can accept data. This signal handshakes with nStrobe in the forward direction. In the reverse direction this signal indicates whether the data lines contain ECP command information or data. The peripheral uses this signal to automatic direction control in the forward direction. It is an “interlocked” handshake with nStrobe. PeriphAck also provides command information in the reverse direction.
PError (nAckReverse)	I	Used to acknowledge a change in the direction the transfer (asserted = forward). The peripheral drives this signal low to acknowledge nReverseRequest. It is an “interlocked” handshake with nReverseRequest. The host relies upon nAckReverse to determine when it is permitted to drive the data bus.
Select	I	Indicates printer on line.
nAutoFd (HostAck)	O	Requests a byte of data from the peripheral when asserted, handshaking with nAck in the reverse direction. In the forward direction this signal indicates whether the data lines contain ECP address or data. The host drives this signal to automatic direction control in the reverse direction. It is an “interlocked” handshake with nAck. HostAck also provides command information in the forward phase.
nFault (nPeriphRequest)	I	Generates an error interrupt when asserted. This signal provides a mechanism for peer-to-peer communication. This signal is valid only in the forward direction. During ECP Mode the peripheral is permitted (but not required) to drive this pin low to request a reverse transfer. The request is merely a “hint” to the host; the host has ultimate control over the transfer direction. This signal would be typically used to generate an interrupt to the host CPU.
nInit	O	Sets the transfer direction (asserted = reverse, deasserted = forward). This pin is driven low to place the channel in the reverse direction. The peripheral is only allowed to drive the bi-directional data bus while in ECP Mode and HostAck is low and nSelectIn is high.
nSelectIn	O	Always deasserted in ECP mode.

7.2.3 REGISTER DEFINITIONS

The register definitions are based on the standard IBM addresses for LPT. All of the standard printer ports are supported. The additional registers attach to an upper bit decode of the standard LPT port definition to avoid conflict with standard ISA devices. The port is equivalent to a generic parallel port interface and may be operated in that mode. The port registers vary depending on the mode field in the ecr. Table 7-4 lists these dependencies. Operation of the devices in modes other that those specified is undefined.

TABLE 7-4: ECP REGISTER DEFINITIONS

Name	Address (See Notes)	ECP Modes	Function
data	+000h R/W	000-001	Data Register
ecpAFifo	+000h R/W	011	ECP FIFO (Address)
dsr	+001h R/W	All	Status Register
dcr	+002h R/W	All	Control Register
cFifo	+400h R/W	010	Parallel Port Data FIFO
ecpDFifo	+400h R/W	011	ECP FIFO (DATA)
tFifo	+400h R/W	110	Test FIFO
cnfgA	+400h R	111	Configuration Register A
cnfgB	+401h R/W	111	Configuration Register B
ecr	+402h R/W	All	Extended Control Register

Note 1: These addresses are added to the parallel port base address as selected by configuration register or jumpers.

2: All addresses are qualified with AEN. Refer to the AEN pin definition.

TABLE 7-5: MODE DESCRIPTIONS

Mode	Description
000	SPP mode
001	PS/2 Parallel Port mode
010	Parallel Port Data FIFO mode
011	ECP Parallel Port mode
100	EPP mode (If this option is enabled in the configuration registers)
101	Reserved
110	Test mode
111	Configuration mode
*Refer to ECR Register Description	

7.2.4 DATA AND ECPAFIFO PORT

ADDRESS OFFSET = 00H

Modes 000 and 001 (Data Port)

The Data Port is located at an offset of ‘00H’ from the base address. The data register is cleared at initialization by RESET. During a WRITE operation, the Data Register latches the contents of the data bus. The contents of this register are buffered (non inverting) and output onto the PD0 - PD7 ports. During a READ operation, PD0 - PD7 ports are read and output to the host CPU.

Mode 011 (ECP FIFO - Address/RLE)

A data byte written to this address is placed in the FIFO and tagged as an ECP Address/RLE. The hardware at the ECP port transmits this byte to the peripheral automatically. The operation of this register is only defined for the forward direction (direction is 0).

© 2016-2017 Microchip Technology Inc.

7.2.5 DEVICE STATUS REGISTER (DSR)

ADDRESS OFFSET = 01H

The Status Port is located at an offset of ‘01H’ from the base address. Bits0 - 2 are not implemented as register bits, during a read of the Printer Status Register these bits are a low level. The bits of the Status Port are defined as follows:

Bit 3 nFault

The level on the nFault input is read by the CPU as bit 3 of the Device Status Register.

Bit 4 Select

The level on the Select input is read by the CPU as bit 4 of the Device Status Register.

Bit 5 PError

The level on the PError input is read by the CPU as bit 5 of the Device Status Register. Printer Status Register.

Bit 6 nAck

The level on the nAck input is read by the CPU as bit 6 of the Device Status Register.

Bit 7 nBusy

The complement of the level on the BUSY input is read by the CPU as bit 7 of the Device Status Register.

7.2.6 DEVICE CONTROL REGISTER (DCR)

ADDRESS OFFSET = 02H

The Control Register is located at an offset of ‘02H’ from the base address. The Control Register is initialized to zero by the RESET input, bits 0 to 5 only being affected; bits 6 and 7 are hard wired low.

Bit 0 STROBE - STROBE

This bit is inverted and output onto the nSTROBE output.

Bit 1 AUTOFD - AUTOFEED

This bit is inverted and output onto the nAutoFd output. A logic 1 causes the printer to generate a line feed after each line is printed. A logic 0 means no autofeed.

Bit 2 nINIT - INITIATE OUTPUT

This bit is output onto the nINIT output without inversion.

Bit 3 SELECTIN

This bit is inverted and output onto the nSLCTIN output. A logic 1 on this bit selects the printer; a logic 0 means the printer is not selected.

Bit 4 ackIntEn - INTERRUPT REQUEST ENABLE

The interrupt request enable bit when set to a high level may be used to enable interrupt requests from the Parallel Port to the CPU due to a low to high transition on the nACK input. Refer to the description of the interrupt under Operation, Interrupts.

Bit 5 DIRECTION

If mode=000 or mode=010, this bit has no effect and the direction is always out regardless of the state of this bit. In all other modes, Direction is valid and a logic 0 means that the printer port is in output mode (write); a logic 1 means that the printer port is in input mode (read).

Bits 6 and 7 during a read are a low level, and cannot be written.

cFifo (Parallel Port Data FIFO)

ADDRESS OFFSET = 400h

Mode = 010

Bytes written or DMAed from the system to this FIFO are transmitted by a hardware handshake to the peripheral using the standard parallel port protocol. Transfers to the FIFO are byte aligned. This mode is only defined for the forward direction.

ecpDFifo (ECP Data FIFO)

ADDRESS OFFSET = 400H

Mode = 011

Bytes written or DMAed from the system to this FIFO, when the direction bit is 0, are transmitted by a hardware handshake to the peripheral using the ECP parallel port protocol. Transfers to the FIFO are byte aligned.

Data bytes from the peripheral are read under automatic hardware handshake from ECP into this FIFO when the direction bit is 1. Reads or DMAs from the FIFO will return bytes of ECP data to the system.

tFifo (Test FIFO Mode)

ADDRESS OFFSET = 400H

Mode = 110

Data bytes may be read, written or DMAed to or from the system to this FIFO in any direction. Data in the tFIFO will not be transmitted to the to the parallel port lines using a hardware protocol handshake. However, data in the tFIFO may be displayed on the parallel port data lines.

The tFIFO will not stall when overwritten or underrun. If an attempt is made to write data to a full tFIFO, the new data is not accepted into the tFIFO. If an attempt is made to read data from an empty tFIFO, the last data byte is re-read again. The full and empty bits must always keep track of the correct FIFO state. The tFIFO will transfer data at the maximum ISA rate so that software may generate performance metrics.

The FIFO size and interrupt threshold can be determined by writing bytes to the FIFO and checking the full and serviceIntr bits.

The writeIntrThreshold can be determined by starting with a full tFIFO, setting the direction bit to 0 and emptying it a byte at a time until serviceIntr is set. This may generate a spurious interrupt, but will indicate that the threshold has been reached.

The readIntrThreshold can be determined by setting the direction bit to 1 and filling the empty tFIFO a byte at a time until serviceIntr is set. This may generate a spurious interrupt, but will indicate that the threshold has been reached.

Data bytes are always read from the head of tFIFO regardless of the value of the direction bit. For example if 44h, 33h, 22h is written to the FIFO, then reading the tFIFO will return 44h, 33h, 22h in the same order as was written.

cnfgA (Configuration Register A)

ADDRESS OFFSET = 400H

Mode = 111

This register is a read only register. When read, 10H is returned. This indicates to the system that this is an 8-bit implementation. (PWord = 1 byte)

cnfgB (Configuration Register B)

ADDRESS OFFSET = 401H

Mode = 111

Bit 7 compress

This bit is read only. During a read it is a low level. This means that this chip does not support hardware RLE compression. It does support hardware de-compression.

Bit 6 intrValue

Returns the value of the interrupt to determine possible conflicts.

Bit [5:3] Parallel Port IRQ (read-only)

to Table 7-7 on page 68.

Bits [2:0] Parallel Port DMA (read-only)

to Table 7-8 on page 68.

ecr (Extended Control Register)

© 2016-2017 Microchip Technology Inc.

ADDRESS OFFSET = 402H

Mode = all

This register controls the extended ECP parallel port functions.

Bits 7,6,5

These bits are Read/Write and select the Mode.

Bit 4 nErrIntrEn

Read/Write (Valid only in ECP Mode)

1: Disables the interrupt generated on the asserting edge of nFault.

0: Enables an interrupt pulse on the high to low edge of nFault. Note that an interrupt will be generated if nFault is asserted (interrupting) and this bit is written from a 1 to a 0. This prevents interrupts from being lost in the time between the read of the ecr and the write of the ecr.

Bit 3 dmaEn

Read/Write

1: Enables DMA (DMA starts when serviceIntr is 0).

0: Disables DMA unconditionally.

Bit 2 serviceIntr

Read/Write

1: Disables DMA and all of the service interrupts.

0: Enables one of the following 3 cases of interrupts. Once one of the 3 service interrupts has occurred serviceIntr bit shall be set to a 1 by hardware. It must be reset to 0 to re-enable the interrupts. Writing this bit to a 1 will not cause an interrupt.

case dmaEn=1:

During DMA (this bit is set to a 1 when terminal count is reached).

case dmaEn=0 direction=0:

This bit shall be set to 1 whenever there are writeIntrThreshold or more bytes free in the FIFO.

case dmaEn=0 direction=1:

This bit shall be set to 1 whenever there are readIntrThreshold or more valid bytes to be read from the FIFO.

Bit 1 full

Read only

1: The FIFO cannot accept another byte or the FIFO is completely full.

0: The FIFO has at least 1 free byte.

Bit 0 empty

Read only

1: The FIFO is completely empty.

0: The FIFO contains at least 1 byte of data.

TABLE 7-6: EXTENDED CONTROL REGISTER (A)

R/W	Mode
000:	Standard Parallel Port Mode. In this mode the FIFO is reset and common drain drivers are used on the control lines (nStrobe, nAutoFd, nInit and nSelectIn). Setting the direction bit will not tri-state the output drivers in this mode.
001:	PS/2 Parallel Port Mode. Same as above except that direction may be used to tri-state the data lines and reading the data register returns the value on the data lines and not the value in the data register. All drivers have active pull-ups (push-pull).
010:	Parallel Port FIFO Mode. This is the same as 000 except that bytes are written or DMAed to the FIFO. FIFO data is automatically transmitted using the standard parallel port protocol. Note that this mode is only useful when direction is 0. All drivers have active pull-ups (push-pull).
011:	ECP Parallel Port Mode. In the forward direction (direction is 0) bytes placed into the ecpDFifo and bytes written to the ecpAFifo are placed in a single FIFO and transmitted automatically to the peripheral using ECP Protocol. In the reverse direction (direction is 1) bytes are moved from the ECP parallel port and packed into bytes in the ecpDFifo. All drivers have active pull-ups (push-pull).
100:	Selects EPP Mode: In this mode, EPP is selected if the EPP supported option is selected in configuration register L3-CRF0. All drivers have active pull-ups (push-pull).
101:	Reserved
110:	Test Mode. In this mode the FIFO may be written and read, but the data will not be transmitted on the parallel port. All drivers have active pull-ups (push-pull).
111:	Configuration Mode. In this mode the confgA, confgB registers are accessible at 0x400 and 0x401. All drivers have active pull-ups (push-pull).

TABLE 7-7: EXTENDED CONTROL REGISTER (B)

IRQ Selected	Config REG B Bits 5:3
15	110
14	101
11	100
10	011
9	010
7	001
5	111
All others	000

TABLE 7-8: EXTENDED CONTROL REGISTER (C)

IRQ Selected	Config REG B Bits 5:3
3	011
2	010
1	001
All others	000

7.2.7 OPERATION

Mode Switching/Software Control

Software will execute P1284 negotiation and all operation prior to a data transfer phase under programmed I/O control (mode 000 or 001). Hardware provides an automatic control line handshake, moving data between the FIFO and the ECP port only in the data transfer phase (modes 011 or 010).

Setting the mode to 011 or 010 will cause the hardware to initiate data transfer.

If the port is in mode 000 or 001 it may switch to any other mode. If the port is not in mode 000 or 001 it can only be switched into mode 000 or 001. The direction can only be changed in mode 001.

© 2016-2017 Microchip Technology Inc.

Once in an extended forward mode the software should wait for the FIFO to be empty before switching back to mode 000 or 001. In this case all control signals will be deasserted before the mode switch. In an ecp reverse mode the software waits for all the data to be read from the FIFO before changing back to mode 000 or 001. Since the automatic hardware ecp reverse handshake only cares about the state of the FIFO it may have acquired extra data which will be discarded. It may in fact be in the middle of a transfer when the mode is changed back to 000 or 001. In this case the port will deassert nAutoFd independent of the state of the transfer. The design shall not cause glitches on the handshake signals if the software meets the constraints above.

7.2.8 ECP OPERATION

Prior to ECP operation the Host must negotiate on the parallel port to determine if the peripheral supports the ECP protocol. This is a somewhat complex negotiation carried out under program control in mode 000.

After negotiation, it is necessary to initialize some of the port bits. The following are required:

Set Direction = 0, enabling the drivers.

Set strobe = 0, causing the nStrobe signal to default to the deasserted state.

Set autoFd = 0, causing the nAutoFd signal to default to the deasserted state.

Set mode = 011 (ECP Mode)

ECP address/RLE bytes or data bytes may be sent automatically by writing the ecpAFifo or ecpDFifo respectively.

Note that all FIFO data transfers are byte wide and byte aligned. Address/RLE transfers are byte-wide and only allowed in the forward direction.

The host may switch directions by first switching to mode = 001, negotiating for the forward or reverse channel, setting direction to 1 or 0, then setting mode = 011. When direction is 1 the hardware shall handshake for each ECP read data byte and attempt to fill the FIFO. Bytes may then be read from the ecpDFifo as long as it is not empty.

ECP transfers may also be accomplished (albeit slowly) by handshaking individual bytes under program control in mode = 001, or 000.

7.2.9 TERMINATION FROM ECP MODE

Termination from ECP Mode is similar to the termination from Nibble/Byte Modes. The host is permitted to terminate from ECP Mode only in specific well-defined states. The termination can only be executed while the bus is in the forward direction. To terminate while the channel is in the reverse direction, it must first be transitioned into the forward direction.

7.2.10 COMMAND/DATA

ECP Mode supports two advanced features to improve the effectiveness of the protocol for some applications. The features are implemented by allowing the transfer of normal 8 bit data or 8 bit commands.

When in the forward direction, normal data is transferred when HostAck is high and an 8 bit command is transferred when HostAck is low.

The most significant bit of the command indicates whether it is a run-length count (for compression) or a channel address.

When in the reverse direction, normal data is transferred when PeriphAck is high and an 8 bit command is transferred when PeriphAck is low. The most significant bit of the command is always zero. Reverse channel addresses are seldom used and may not be supported in hardware.

TABLE 7-9: CHANNEL/DATA COMMANDS SUPPORTED IN ECP MODE

Forward Channel Commands (HostAck Low) **Reverse Channel Commands (PeripAck Low)**	
D7	D[6:0]
0	Run-Length Count (0-127) (mode 0011 0X00 only)
1	Channel Address (0-127)

7.2.11 DATA COMPRESSION

The ECP port supports run length encoded (RLE) decompression in hardware and can transfer compressed data to a peripheral. Run length encoded (RLE) compression in hardware is not supported. To transfer compressed data in ECP mode, the compression count is written to the ecpAFifo and the data byte is written to the ecpDFifo.

Compression is accomplished by counting identical bytes and transmitting an RLE byte that indicates how many times the next byte is to be repeated. Decompression simply intercepts the RLE byte and repeats the following byte the specified number of times. When a run-length count is received from a peripheral, the subsequent data byte is replicated the specified number of times. A run-length count of zero specifies that only one byte of data is represented by the next data byte, whereas a run-length count of 127 indicates that the next byte should be expanded to 128 bytes. To prevent data expansion, however, run-length counts of zero should be avoided.

7.2.12 PIN DEFINITION

The drivers for nStrobe, nAutoFd, nInit and nSelectIn are open-drain in mode 000 and are push-pull in all other modes.

7.2.13 LPC CONNECTIONS

The interface can never stall causing the host to hang. The width of data transfers is strictly controlled on an I/O address basis per this specification. All FIFO-DMA transfers are byte wide, byte aligned and end on a byte boundary. (The PWord value can be obtained by reading Configuration Register A, cnfgA, described in the next section). Single byte wide transfers are always possible with standard or PS/2 mode using program control of the control signals.

7.2.14 INTERRUPTS

The interrupts are enabled by serviceIntr in the ecr register.

serviceIntr = 1 Disables the DMA and all of the service interrupts.

serviceIntr = 0 Enables the selected interrupt condition. If the interrupting condition is valid, then the interrupts generated immediately when this bit is changed from a 1 to a 0. This can occur during Programmed I/O if the number of bytes removed or added from/to the FIFO does not cross the threshold.

An interrupt is generated when:

1. For DMA transfers: When serviceIntr is 0, dmaEn is 1 and the DMA TC cycle is received.
2. For Programmed I/O:
   a) When serviceIntr is 0, dmaEn is 0, direction is 0 and there are writeIntrThreshold or more free bytes in the FIFO. Also, an interrupt is generated when serviceIntr is cleared to 0 whenever there are writeIntrThreshold or more free bytes in the FIFO.
   b) When serviceIntr is 0, dmaEn is 0, direction is 1 and there are readIntrThreshold or more bytes in the FIFO. Also, an interrupt is generated when serviceIntr is cleared to 0 whenever there are readIntrThreshold or more bytes in the FIFO.
3. When nErrIntrEn is 0 and nFault transitions from high to low or when nErrIntrEn is set from 1 to 0 and nFault is asserted.
4. When ackIntEn is 1 and the nAck signal transitions from a low to a high.

7.2.15 FIFO OPERATION

The FIFO threshold is set in the chip configuration registers. All data transfers to or from the parallel port can proceed in DMA or Programmed I/O (non-DMA) mode as indicated by the selected mode. The FIFO is used by selecting the Parallel Port FIFO mode or ECP Parallel Port Mode. (FIFO test mode will be addressed separately.) After a reset, the FIFO is disabled. Each data byte is transferred by a Programmed I/O cycle or DMA cycle depending on the selection of DMA or Programmed I/O mode.

The following paragraphs detail the operation of the FIFO automatic direction control. In these descriptions, <threshold> ranges from 1 to 16. The parameter FIFOTHR, which the user programs, is one less and ranges from 0 to 15.

A low threshold value (i.e. 2) results in longer periods of time between service requests, but requires faster servicing of the request for both read and write cases. The host must be very responsive to the service request. This is the desired case for use with a “fast” system. A high value of threshold (i.e. 12) is used with a “sluggish” system by affording a long latency period after a service request, but results in more frequent service requests.

© 2016-2017 Microchip Technology Inc.

7.2.16 DMA TRANSFERS

DMA transfers are always to or from the ecpDFifo, tFifo or CFifo. DMA utilizes the standard PC DMA services. To use the DMA transfers, the host first sets up the direction and state as in the programmed I/O case. Then it programs the DMA controller in the host with the desired count and memory address. Lastly it sets dmaEn to 1 and serviceIntr to 0. The ECP requests DMA transfers from the host by encoding the LDRQ# pin. The DMA will empty or fill the FIFO using the appropriate direction and mode. When the terminal count in the DMA controller is reached, an interrupt is generated and serviceIntr is asserted, disabling DMA. In order to prevent possible blocking of refresh requests a DMA cycle shall not be requested for more than 32 DMA cycles in a row. The FIFO is enabled directly by the host initiating a DMA cycle for the requested channel, and addresses need not be valid. An interrupt is generated when a TC cycle is received. (Note: The only way to properly terminate DMA transfers is with a TC cycle.)

DMA may be disabled in the middle of a transfer by first disabling the host DMA controller. Then setting serviceIntr to 1, followed by setting dmaEn to 0, and waiting for the FIFO to become empty or full. Restarting the DMA is accomplished by enabling DMA in the host, setting dmaEn to 1, followed by setting serviceIntr to 0.

7.2.17 DMA MODE - TRANSFERS FROM THE FIFO TO THE HOST

Note:	In the reverse mode, the peripheral may not continue to fill the FIFO if it runs out of data to transfer, even if the chip continues to request more data from the peripheral.

The ECP requests a DMA cycle whenever there is data in the FIFO. The DMA controller must respond to the request by reading data from the FIFO. The ECP stops requesting DMA cycles when the FIFO becomes empty or when a TC cycle is received, indicating that no more data is required. If the ECP stops requesting DMA cycles due to the FIFO going empty, then a DMA cycle is requested again as soon as there is one byte in the FIFO. If the ECP stops requesting DMA cycles due to the TC cycle, then a DMA cycle is requested again when there is one byte in the FIFO, and serviceIntr has been re-enabled.

7.2.18 PROGRAMMED I/O MODE OR NON-DMA MODE

The ECP or parallel port FIFOs may also be operated using interrupt driven programmed I/O. Software can determine the writeIntrThreshold, readIntrThreshold, and FIFO depth by accessing the FIFO in Test Mode.

Programmed I/O transfers are to the ecpDFifo at 400H and ecpAFifo at 000H or from the ecpDFifo located at 400H, or to/from the tFifo at 400H. To use the programmed I/O transfers, the host first sets up the direction and state, sets dmaEn to 0 and serviceIntr to 0.

The ECP requests programmed I/O transfers from the host by activating the interrupt. The programmed I/O will empty or fill the FIFO using the appropriate direction and mode.

Note:	A threshold of 16 is equivalent to a threshold of 15. These two cases are treated the same.

7.2.19 PROGRAMMED I/O - TRANSFERS FROM THE FIFO TO THE HOST

In the reverse direction an interrupt occurs when serviceIntr is 0 and readIntrThreshold bytes are available in the FIFO. If at this time the FIFO is full it can be emptied completely in a single burst, otherwise readIntrThreshold bytes may be read from the FIFO in a single burst.

readIntrThreshold =(16-<threshold>) data bytes in FIFO

An interrupt is generated when serviceIntr is 0 and the number of bytes in the FIFO is greater than or equal to (16-<threshold>). (If the threshold = 12, then the interrupt is set whenever there are 4-16 bytes in the FIFO). The host must respond to the request by reading data from the FIFO. This process is repeated until the last byte is transferred out of the FIFO. If at this time the FIFO is full, it can be completely emptied in a single burst, otherwise a minimum of (16-<threshold>) bytes may be read from the FIFO in a single burst.

7.2.20 PROGRAMMED I/O - TRANSFERS FROM THE HOST TO THE FIFO

In the forward direction an interrupt occurs when serviceIntr is 0 and there are writeIntrThreshold or more bytes free in the FIFO. At this time if the FIFO is empty it can be filled with a single burst before the empty bit needs to be re-read. Otherwise it may be filled with writeIntrThreshold bytes.

writeIntrThreshold = (16-<threshold>) free bytes in FIFO

An interrupt is generated when serviceIntr is 0 and the number of bytes in the FIFO is less than or equal to <threshold>. (If the threshold = 12, then the interrupt is set whenever there are 12 or less bytes of data in the FIFO.) The host must respond to the request by writing data to the FIFO. If at this time the FIFO is empty, it can be completely filled in a single burst, otherwise a minimum of (16-<threshold>) bytes may be written to the FIFO in a single burst. This process is repeated until the last byte is transferred into the FIFO.

© 2016-2017 Microchip Technology Inc.

8.0 POWER MANAGEMENT

Power management capabilities are provided for the following logical devices: UART 1, UART 2 and the parallel port.

Note:	Each Logical Device may be place in powerdown mode by clearing the associated activate bit located at CR30 or by clearing the associated power bit located in the Power Control register at CR22.

UART Power Management

Direct power management is controlled by CR22. Refer to CR22 for more information.

Parallel Port

Direct power management is controlled by CR22. Refer to CR22 for more information.

9.0 SERIAL IRQ

The SCH3227/SCH3226/SCH3224/SCH3222 supports the serial interrupt to transmit interrupt information to the host system. The serial interrupt scheme adheres to the Serial IRQ Specification for PCI Systems, Version 6.0.

9.1 Timing Diagrams For SER_IRQ Cycle

a) Start Frame timing with source sampled a low pulse on IRQ1

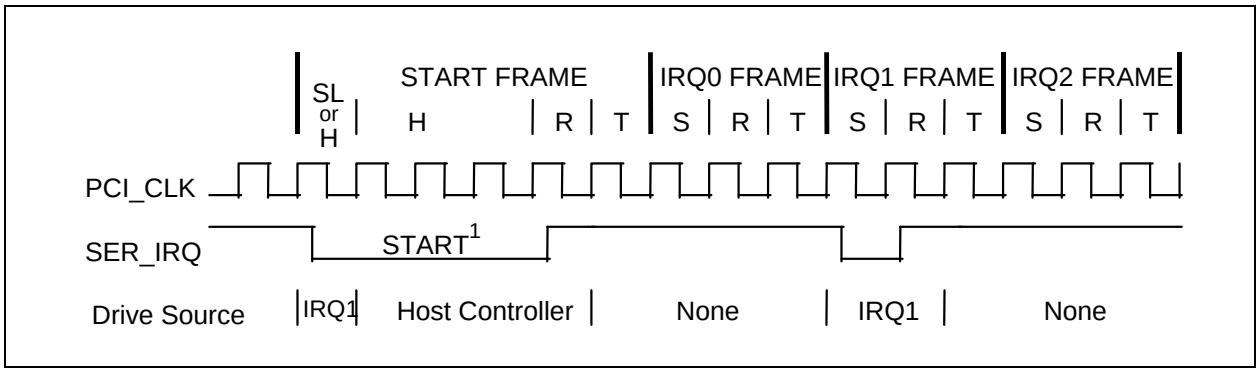

Note 1: H=Host Control; R=Recovery; T=Turn-Around; SL=Slave Control; S=Sample

2: Start Frame pulse can be 4-8 clocks wide depending on the location of the device in the PCI bridge hierarchy in a synchronous bridge design.

b) Stop Frame Timing with Host using 17 SER_IRQ sampling period

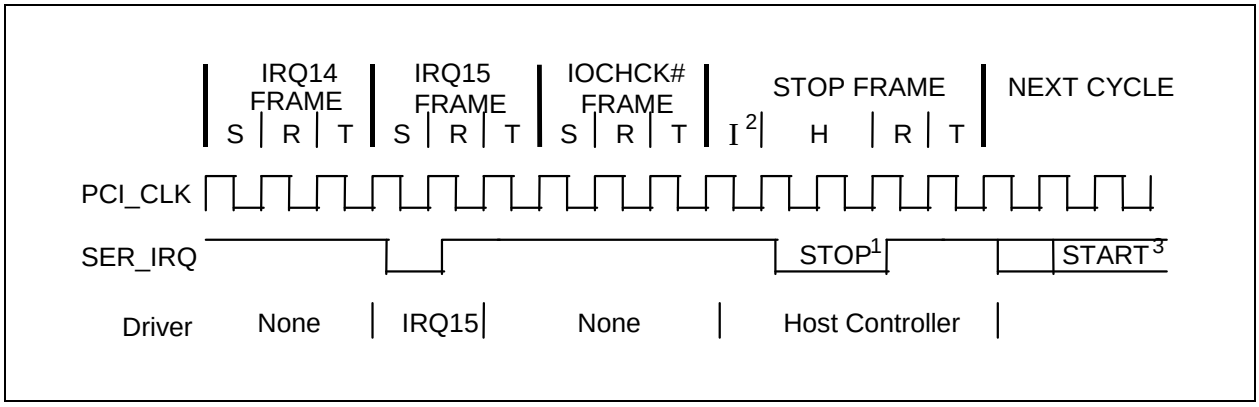

Note 1: H=Host Control; R=Recovery; T=Turn-Around; S=Sample; I=Idle

2: The next SER_IRQ cycle's Start Frame pulse <u>may</u> or may not start immediately after the turn-around clock of the Stop Frame.

3: There may be none, one or more Idle states during the Stop Frame.

4: Stop pulse is 2 clocks wide for Quiet mode, 3 clocks wide for Continuous mode.

© 2016-2017 Microchip Technology Inc.

9.2 SER_IRQ Cycle Control

There are two modes of operation for the SER_IRQ Start Frame

1. **Quiet (Active) Mode**: Any device may initiate a Start Frame by driving the SER_IRQ low for one clock, while the SER_IRQ is Idle. After driving low for one clock the SER_IRQ must immediately be tri-stated without at any time driving high. A Start Frame may not be initiated while the SER_IRQ is Active. The SER_IRQ is Idle between Stop and Start Frames. The SER_IRQ is Active between Start and Stop Frames. This mode of operation allows the SER_IRQ to be Idle when there are no IRQ/Data transitions which should be most of the time.

Once a Start Frame has been initiated the Host Controller will take over driving the SER_IRQ low in the next clock and will continue driving the SER_IRQ low for a programmable period of three to seven clocks. This makes a total low pulse width of four to eight clocks. Finally, the Host Controller will drive the SER_IRQ back high for one clock, then tri-state.

Any SER_IRQ Device (i.e., The SCH3227/SCH3226/SCH3224/SCH3222 which detects any transition on an IRQ/Data line for which it is responsible must initiate a Start Frame in order to update the Host Controller unless the SER_IRQ is already in an SER_IRQ Cycle and the IRQ/Data transition can be delivered in that SER_IRQ Cycle

2. **Continuous (Idle) Mode**: Only the Host controller can initiate a Start Frame to update IRQ/Data line information. All other SER_IRQ agents become passive and may not initiate a Start Frame. SER_IRQ will be driven low for four to eight clocks by Host Controller. This mode has two functions. It can be used to stop or idle the SER_IRQ or the Host Controller can operate SER_IRQ in a continuous mode by initiating a Start Frame at the end of every Stop Frame.

An SER_IRQ mode transition can only occur during the Stop Frame. Upon reset, SER_IRQ bus is defaulted to Continuous mode, therefore only the Host controller can initiate the first Start Frame. Slaves must continuously sample the Stop Frames pulse width to determine the next SER_IRQ Cycle's mode.

9.3 SER_IRQ Data Frame

Once a Start Frame has been initiated, the SCH3227/SCH3226/SCH3224/SCH3222 will watch for the rising edge of the Start Pulse and start counting IRQ/Data Frames from there. Each IRQ/Data Frame is three clocks: Sample phase, Recovery phase, and Turn-around phase. During the Sample phase the SCH3227/SCH3226/SCH3224/SCH3222 must drive the SER_IRQ low, if and only if, its last detected IRQ/Data value was low. If its detected IRQ/Data value is high, SER_IRQ must be left tri-stated. During the Recovery phase the SCH3227/SCH3226/SCH3224/SCH3222 must drive the SER_IRQ high, if and only if, it had driven the SER_IRQ low during the previous Sample Phase. During the Turn-around Phase the SCH3227/SCH3226/SCH3224/SCH3222 must tri-state the SER_IRQ.The SCH3227/SCH3226/SCH3224/SCH3222 will drive the SER_IRQ line low at the appropriate sample point if its associated IRQ/Data line is low, regardless of which device initiated the Start Frame.

The Sample Phase for each IRQ/Data follows the low to high transition of the Start Frame pulse by a number of clocks equal to the IRQ/Data Frame times three, minus one. (e.g. The IRQ5 Sample clock is the sixth IRQ/Data Frame, (6 x 3) - 1 = 17th clock after the rising edge of the Start Pulse).

SER_IRQ Sampling Periods		
SER_IRQ Period	**Signal Sampled**	**# of Clocks Past Start**
1	Not Used	2
2	IRQ1	5
3	nIO_SMI/IRQ2	8
4	IRQ3	11
5	IRQ4	14
6	IRQ5	17
7	IRQ6	20
8	IRQ7	23
9	IRQ8	26
10	IRQ9	29
11	IRQ10	32
12	IRQ11	35
13	IRQ12	38

SER_IRQ Sampling Periods		
SER_IRQ Period	**Signal Sampled**	**# of Clocks Past Start**
14	IRQ13	41
15	IRQ14	44
16	IRQ15	47

The SER_IRQ data frame supports IRQ2 from a logical device on Period 3, which can be used for the System Management Interrupt (nSMI). When using Period 3 for IRQ2 the user should mask off the SMI via the SMI Enable Register. Likewise, when using Period 3 for nSMI the user should not configure any logical devices as using IRQ2.

SER_IRQ Period 14 is used to transfer IRQ13. Logical devices 3 (Par Port), 4 (Ser Port 1), 5 (Ser Port 2), and 7 (KBD) shall have IRQ13 as a choice for their primary interrupt.

The SMI is enabled onto the SMI frame of the Serial IRQ via bit 6 of SMI Enable Register 2 and onto the nIO_SMI pin via bit 7 of the SMI Enable Register 2.

9.4 Stop Cycle Control

Once all IRQ/Data Frames have completed the Host Controller will terminate SER_IRQ activity by initiating a Stop Frame. Only the Host Controller can initiate the Stop Frame. A Stop Frame is indicated when the SER_IRQ is low for two or three clocks. If the Stop Frame's low time is two clocks then the next SER_IRQ Cycle's sampled mode is the Quiet mode; and any SER_IRQ device may initiate a Start Frame in the second clock or more after the rising edge of the Stop Frame's pulse. If the Stop Frame's low time is three clocks then the next SER_IRQ Cycle's sampled mode is the Continuous mode; and only the Host Controller may initiate a Start Frame in the second clock or more after the rising edge of the Stop Frame's pulse.

9.5 Latency

Latency for IRQ/Data updates over the SER_IRQ bus in bridge-less systems with the minimum Host supported IRQ/Data Frames of seventeen, will range up to 96 clocks (3.84µS with a 25MHz PCI Bus or 2.88uS with a 33MHz PCI Bus). If one or more PCI to PCI Bridge is added to a system, the latency for IRQ/Data updates from the secondary or tertiary buses will be a few clocks longer for synchronous buses, and approximately double for asynchronous buses.

9.6 EOI/ISR Read Latency

Any serialized IRQ scheme has a potential implementation issue related to IRQ latency. IRQ latency could cause an EOI or ISR Read to precede an IRQ transition that it should have followed. This could cause a system fault. The host interrupt controller is responsible for ensuring that these latency issues are mitigated. The recommended solution is to delay EOIs and ISR Reads to the interrupt controller by the same amount as the SER_IRQ Cycle latency in order to ensure that these events do not occur out of order.

9.7 AC/DC Specification Issue

All SER_IRQ agents must drive / sample SER_IRQ synchronously related to the rising edge of PCI bus clock. The SER_IRQ pin uses the electrical specification of PCI bus. Electrical parameters will follow PCI spec. section 4, sustained tri-state.

9.8 Reset and Initialization

The SER_IRQ bus uses PCI_RESET# as its reset signal. The SER_IRQ pin is tri-stated by all agents while PCI_RESET# is active. With reset, SER_IRQ Slaves are put into the (continuous) IDLE mode. The Host Controller is responsible for starting the initial SER_IRQ Cycle to collect system's IRQ/Data default values. The system then follows with the Continuous/Quiet mode protocol (Stop Frame pulse width) for subsequent SER_IRQ Cycles. It is Host Controller's responsibility to provide the default values to 8259's and other system logic before the first SER_IRQ Cycle is performed. For SER_IRQ system suspend, insertion, or removal application, the Host controller should be programmed into Continuous (IDLE) mode first. This is to ensure SER_IRQ bus is in IDLE state before the system configuration changes.

© 2016-2017 Microchip Technology Inc.

10.0 8042 KEYBOARD CONTROLLER DESCRIPTION

The SCH3227/SCH3226/SCH3224/SCH3222 is a Super I/O and Universal Keyboard Controller that is designed for intelligent keyboard management in desktop computer applications. The Universal Keyboard Controller uses an 8042 microcontroller CPU core. This section concentrates on the SCH3227/SCH3226/SCH3224/SCH3222 enhancements to the 8042. For general information about the 8042, refer to the “Hardware Description of the 8042” in the *8-Bit Embedded Controller Handbook*.

FIGURE 10-1: SCH3227/SCH3226/SCH3224/SCH3222 KEYBOARD AND MOUSE INTERFACE

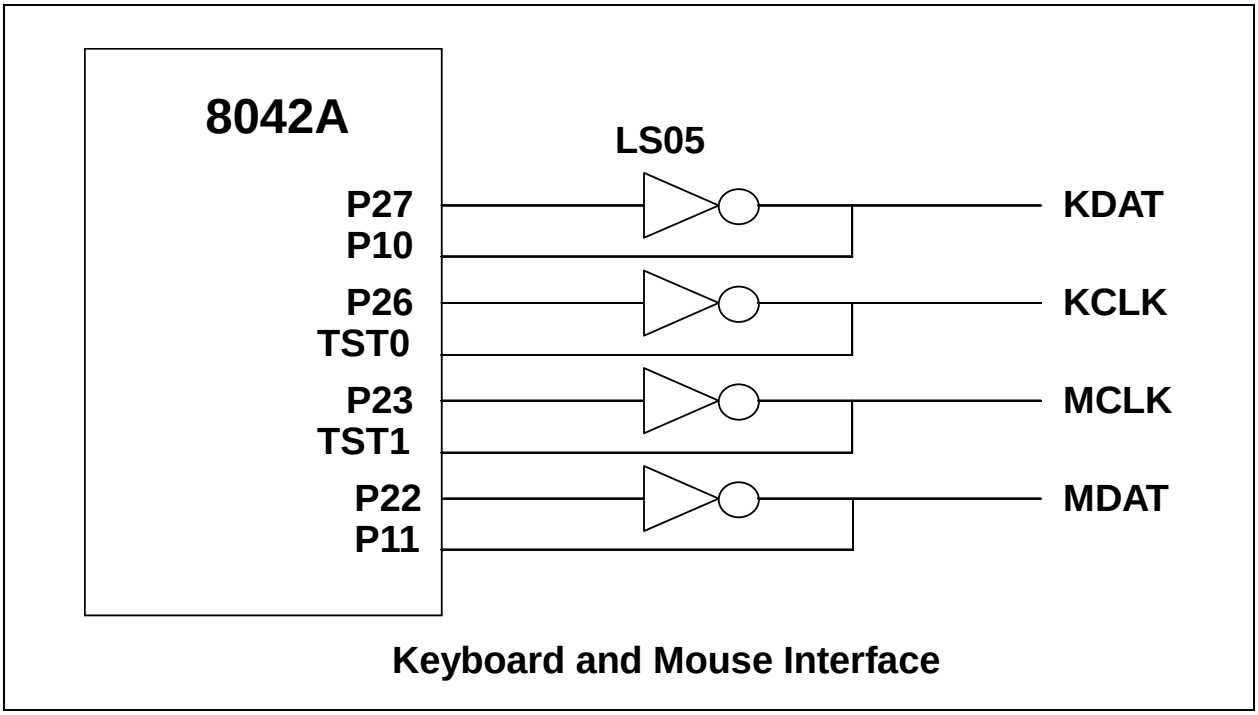

KIRQ is the Keyboard IRQ

MIRQ is the Mouse IRQ

Port 21 is used to create a GATEA20 signal from the SCH3227/SCH3226/SCH3224/SCH3222.

10.1 Keyboard Interface

The SCH3227/SCH3226/SCH3224/SCH3222 LPC interface is functionally compatible with the 8042 style host interface. It consists of the D0-7 data signals; the read and write signals and the Status register, Input Data register, and Output Data register. Table 10-1 shows how the interface decodes the control signals. In addition to the above signals, the host interface includes keyboard and mouse IRQs.

TABLE 10-1: I/O ADDRESS MAP

Address	Command	Block	Function (See Note)
0x60	Write	KDATA	Keyboard Data Write (C/D=0)
	Read	KDATA	Keyboard Data Read
0x64	Write	KDCTL	Keyboard Command Write (C/D=1)
	Read	KDCTL	Keyboard Status Read
Note: These registers consist of three separate 8-bit registers. Status, Data/Command Write and Data Read.			

Keyboard Data Write

This is an 8 bit write only register. When written, the C/D status bit of the status register is cleared to zero and the IBF bit is set.

Keyboard Data Read

This is an 8 bit read only register. If enabled by “ENABLE FLAGS”, when read, the KIRQ output is cleared and the OBF flag in the status register is cleared. If not enabled, the KIRQ and/or AUXOBF1 must be cleared in software.

Keyboard Command Write

This is an 8 bit write only register. When written, the C/D status bit of the status register is set to one and the IBF bit is set.

Keyboard Status Read

This is an 8 bit read only register. Refer to the description of the Status Register for more information.

CPU-to-Host Communication

The SCH3227/SCH3226/SCH3224/SCH3222 CPU can write to the Output Data register via register DBB. A write to this register automatically sets Bit 0 (OBF) in the Status register. See Table 10-2.

TABLE 10-2: HOST INTERFACE FLAGS

8042 Instruction	Flag
OUT DBB	Set OBF, and, if enabled, the KIRQ output signal goes high

Host-to-CPU Communication

The host system can send both commands and data to the Input Data register. The CPU differentiates between commands and data by reading the value of Bit 3 of the Status register. When bit 3 is “1”, the CPU interprets the register contents as a command. When bit 3 is “0”, the CPU interprets the register contents as data. During a host write operation, bit 3 is set to “1” if SA2 = 1 or reset to “0” if SA2 = 0.

KIRQ

If “EN FLAGS” has been executed and P24 is set to a one: the OBF flag is gated onto KIRQ. The KIRQ signal can be connected to system interrupt to signify that the SCH3227/SCH3226/SCH3224/SCH3222 CPU has written to the output data register via “OUT DBB,A”. If P24 is set to a zero, KIRQ is forced low. On power-up, after a valid RST pulse has been delivered to the device, KIRQ is reset to 0. KIRQ will normally reflects the status of writes “DBB”. (KIRQ is normally selected as IRQ1 for keyboard support.)

If “EN FLAGS” has not been executed: KIRQ can be controlled by writing to P24. Writing a zero to P24 forces KIRQ low; a high forces KIRQ high.

MIRQ

If “EN FLAGS” has been executed and P25 is set to a one:; IBF is inverted and gated onto MIRQ. The MIRQ signal can be connected to system interrupt to signify that the SCH3227/SCH3226/SCH3224/SCH3222 CPU has read the DBB register. If “EN FLAGS” has not been executed, MIRQ is controlled by P25, Writing a zero to P25 forces MIRQ low, a high forces MIRQ high. (MIRQ is normally selected as IRQ12 for mouse support).

Gate A20

A general purpose P21 is used as a software controlled Gate A20 or user defined output.

8042 PINS

The 8042 functions P17, P16 and P12 are implemented as in a true 8042 part. Reference the 8042 spec for all timing. A port signal of 0 drives the output to 0. A port signal of 1 causes the port enable signal to drive the output to 1 within 20-30nsec. After 500nsec (six 8042 clocks) the port enable goes away and the external pull-up maintains the output signal as 1.

In 8042 mode, the pins can be programmed as open drain. When programmed in open drain mode, the port enables do not come into play. If the port signal is 0 the output will be 0. If the port signal is 1, the output tristates: an external pull-up can pull the pin high, and the pin can be shared. In 8042 mode, the pins cannot be programmed as input nor inverted through the GP configuration registers.

© 2016-2017 Microchip Technology Inc.

10.2 External Keyboard and Mouse Interface

Industry-standard PC-AT-compatible keyboards employ a two-wire, bidirectional TTL interface for data transmission. Several sources also supply PS/2 mouse products that employ the same type of interface. To facilitate system expansion, the SCH3227/SCH3226/SCH3224/SCH3222 provides four signal pins that may be used to implement this interface directly for an external keyboard and mouse.

The SCH3227/SCH3226/SCH3224/SCH3222 has four high-drive, open-drain output, bidirectional port pins that can be used for external serial interfaces, such as external keyboard and PS/2-type mouse interfaces. They are KCLK, KDAT, MCLK, and MDAT. P26 is inverted and output as KCLK. The KCLK pin is connected to TEST0. P27 is inverted and output as KDAT. The KDAT pin is connected to P10. P23 is inverted and output as MCLK. The MCLK pin is connected to TEST1. P22 is inverted and output as MDAT. The MDAT pin is connected to P11.

Note:	External pull-ups may be required.

10.2.1 KEYBOARD/MOUSE SWAP BIT

There is a Kbd/mouse Swap bit in the Keyboard Select configuration register located at 0xF1 in Logical Device 7. This bit can be used to swap the keyboard and mouse clock and data pins into/out of the 8042. The default value of this bit is ‘0’ on VCC POR, VTR POR and PCI Reset.

1=internally swap the KCLK pin and the MCLK pin, and the KDAT pin and the MDAT pin into/out of the 8042.

0=do not swap the keyboard and mouse clock and data pins

10.3 Keyboard Power Management

The keyboard provides support for two power-saving modes: soft power-down mode and hard power-down mode. In soft power-down mode, the clock to the ALU is stopped but the timer/counter and interrupts are still active. In hard power down mode the clock to the 8042 is stopped.

Soft Power-Down Mode

This mode is entered by executing a HALT instruction. The execution of program code is halted until either RESET is driven active or a data byte is written to the DBBIN register by a master CPU. If this mode is exited using the interrupt, and the IBF interrupt is enabled, then program execution resumes with a CALL to the interrupt routine, otherwise the next instruction is executed. If it is exited using RESET then a normal reset sequence is initiated and program execution starts from program memory location 0.

Hard Power-Down Mode

This mode is entered by executing a STOP instruction. The oscillator is stopped by disabling the oscillator driver cell. When either RESET is driven active or a data byte is written to the DBBIN register by a master CPU, this mode will be exited (as above). However, as the oscillator cell will require an initialization time, either RESET must be held active for sufficient time to allow the oscillator to stabilize. Program execution will resume as above.

10.4 Interrupts

The SCH3227/SCH3226/SCH3224/SCH3222 provides the two 8042 interrupts: IBF and the Timer/Counter Overflow.

10.5 Memory Configurations

The SCH3227/SCH3226/SCH3224/SCH3222 provides 2K of on-chip ROM and 256 bytes of on-chip RAM.

10.6 Register Definitions

Host I/F Data Register

The Input Data register and Output Data register are each 8 bits wide. A write to this 8 bit register will load the Keyboard Data Read Buffer, set the OBF flag and set the KIRQ output if enabled. A read of this register will read the data from the Keyboard Data or Command Write Buffer and clear the IBF flag. Refer to the KIRQ and Status register descriptions for more information.

Host I/F Status Register

The Status register is 8 bits wide.

Table 10-3 shows the contents of the Status register.

TABLE 10-3: STATUS REGISTER

D7	D6	D5	D4	D3	D2	D1	D0
UD	UD	UD	UD	C/D	UD	IBF	OBF

Status Register

This register is cleared on a reset. This register is read-only for the Host and read/write by the SCH3227/SCH3226/SCH3224/SCH3222 CPU.

UD Writable by SCH3227/SCH3226/SCH3224/SCH3222 CPU. These bits are user-definable.

C/D (Command Data)-This bit specifies whether the input data register contains data or a command (0 = data, 1 = command). During a host data/command write operation, this bit is set to “1” if SA2 = 1 or reset to “0” if SA2 = 0.

IBF (Input Buffer Full)- This flag is set to 1 whenever the host system writes data into the input data register. Setting this flag activates the SCH3227/SCH3226/SCH3224/SCH3222 CPU’s nIBF (MIRQ) interrupt if enabled. When the SCH3227/SCH3226/SCH3224/SCH3222 CPU reads the input data register (DBB), this bit is automatically reset and the interrupt is cleared. There is no output pin associated with this internal signal.

OBF (Output Buffer Full) - This flag is set to whenever the SCH3227/SCH3226/SCH3224/SCH3222 CPU write to the output data register (DBB). When the host system reads the output data register, this bit is automatically reset.

10.7 External Clock Signal

The SCH3227/SCH3226/SCH3224/SCH3222 Keyboard Controller clock source is a 12 MHz clock generated from a 14.318 MHz clock. The reset pulse must last for at least 24 16 MHz clock periods. The pulse-width requirement applies to both internally (VCC POR) and externally generated reset signals. In power-down mode, the external clock signal is not loaded by the chip.

10.8 Default Reset Conditions

The SCH3227/SCH3226/SCH3224/SCH3222 has one source of hardware reset: an external reset via the PCI_RESET# pin. Refer to Table 10-4 for the effect of each type of reset on the internal registers.

TABLE 10-4: RESETS

Description	Hardware Reset (PCI_RESET#)
KCLK	Low
KDAT	Low
MCLK	Low
MDAT	Low
Host I/F Data Reg	N/A
Host I/F Status Reg	00H
Note: N/A = Not Applicable	

10.9 GATEA20 and Keyboard Reset

The SCH3227/SCH3226/SCH3224/SCH3222 provides two options for GateA20 and Keyboard Reset: 8042 Software Generated GateA20 and KRESET and Port 92 Fast GateA20 and KRESET.

© 2016-2017 Microchip Technology Inc.

10.10 Port 92 Fast GATEA20 and Keyboard Reset

Port 92 Register

This port can only be read or written if Port 92 has been enabled via bit 2 of the KRST_GA20 Register (Logical Device 7, 0xF0) set to 1.

This register is used to support the alternate reset (nALT_RST) and alternate A20 (ALT_A20) functions.

Name	Port 92
Location	92h
Default Value	24h
Attribute	Read/Write
Size	8 bits

Port 92 Register	
Bit	**Function**
7:6	Reserved. Returns 00 when read
5	Reserved. Returns a 1 when read
4	Reserved. Returns a 0 when read
3	Reserved. Returns a 0 when read
2	Reserved. Returns a 1 when read
1	ALT_A20 Signal control. Writing a 0 to this bit causes the ALT_A20 signal to be driven low. Writing a 1 to this bit causes the ALT_A20 signal to be driven high.
0	Alternate System Reset. This read/write bit provides an alternate system reset function. This function provides an alternate means to reset the system CPU to effect a mode switch from Protected Virtual Address Mode to the Real Address Mode. This provides a faster means of reset than is provided by the Keyboard controller. This bit is set to a 0 by a system reset. Writing a 1 to this bit will cause the nALT_RST signal to pulse active (low) for a minimum of 1 µs after a delay of 500 ns. Before another nALT_RST pulse can be generated, this bit must be written back to a 0.

NGATEA20		
8042 P21	**ALT_A20**	**System NA20M**
0	0	0
0	1	1
1	0	1
1	1	1

Bit 0 of Port 92, which generates the nALT_RST signal, is used to reset the CPU under program control. This signal is AND'ed together externally with the reset signal (nKBDRST) from the keyboard controller to provide a software means of resetting the CPU. This provides a faster means of reset than is provided by the keyboard controller. Writing a 1 to bit 0 in the Port 92 Register causes this signal to pulse low for a minimum of 6µs, after a delay of a minimum of 14µs. Before another nALT_RST pulse can be generated, bit 0 must be set to 0 either by a system reset of a write to Port 92. Upon reset, this signal is driven inactive high (bit 0 in the Port 92 Register is set to 0).

If Port 92 is enabled, i.e., bit 2 of KRST_GA20 is set to 1, then a pulse is generated by writing a 1 to bit 0 of the Port 92 Register and this pulse is AND'ed with the pulse generated from the 8042. This pulse is output on pin KRESET and its polarity is controlled by the GPI/O polarity configuration.

FIGURE 10-2: GPI/O POLARITY CONFIGURATION

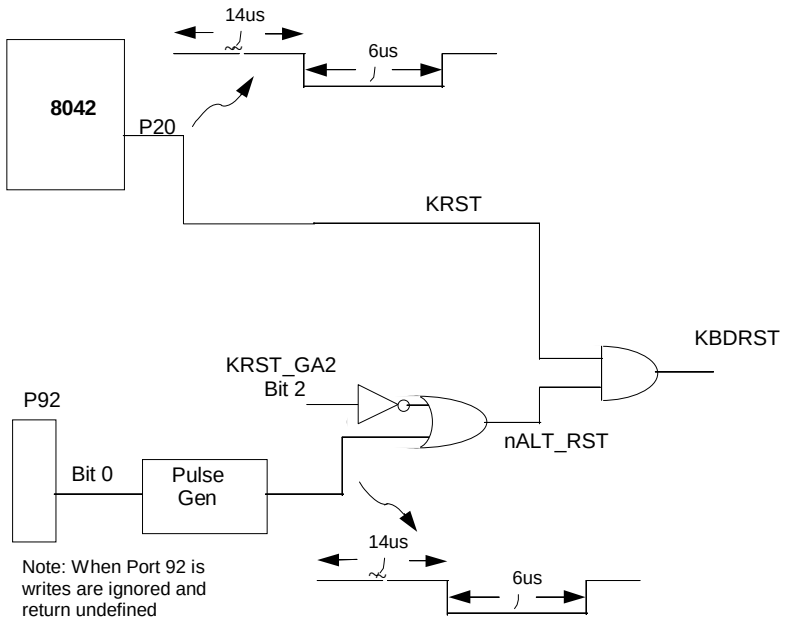

Bit 1 of Port 92, the ALT_A20 signal, is used to force nA20M to the CPU low for support of real mode compatible software. This signal is externally OR'ed with the A20GATE signal from the keyboard controller and CPURST to control the nA20M input of the CPU. Writing a 0 to bit 1 of the Port 92 Register forces ALT_A20 low. ALT_A20 low drives nA20M to the CPU low, if A20GATE from the keyboard controller is also low. Writing a 1 to bit 1 of the Port 92 Register forces ALT_A20 high. ALT_A20 high drives nA20M to the CPU high, regardless of the state of A20GATE from the keyboard controller. Upon reset, this signal is driven low.

© 2016-2017 Microchip Technology Inc.

Latches On Keyboard and Mouse IRQs

The implementation of the latches on the keyboard and mouse interrupts is shown below.

FIGURE 10-3: KEYBOARD LATCH

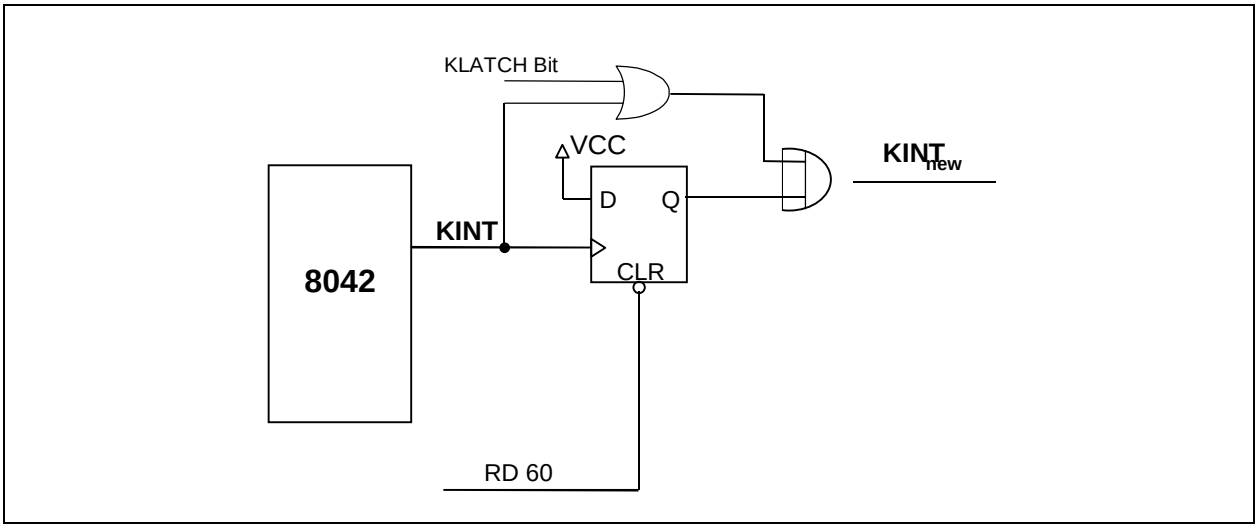

FIGURE 10-4: MOUSE LATCH

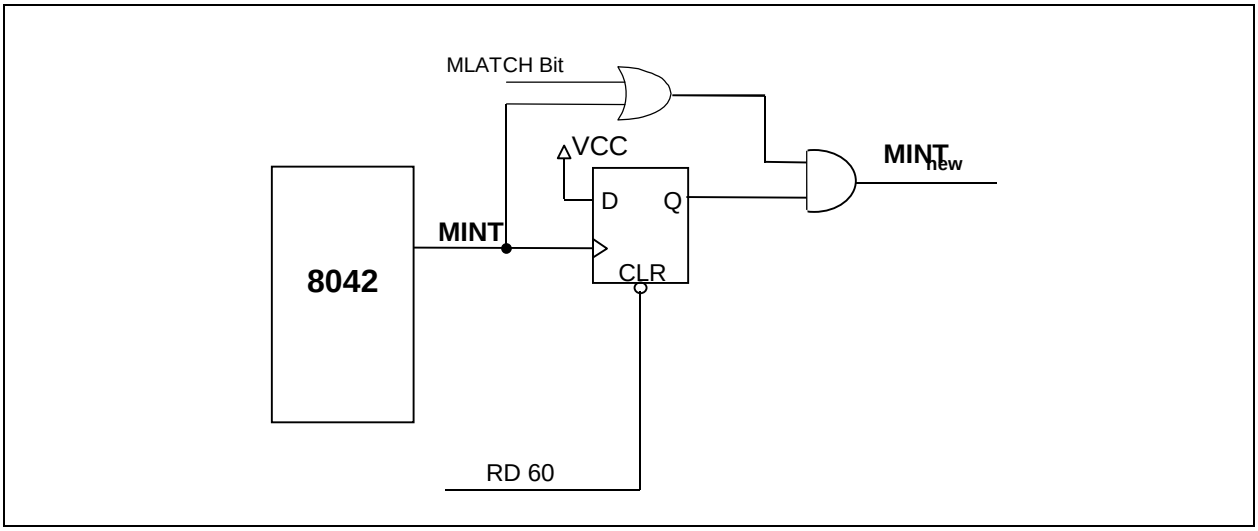

The KLATCH and MLATCH bits are located in the KRST_GA20 register, in Logical Device 7 at 0xF0.

These bits are defined as follows:

Bit[4]: MLATCH – Mouse Interrupt latch control bit. 0=MINT is the 8042 MINT ANDed with Latched MINT (default), 1=MINT is the latched 8042 MINT.

Bit[3]: KLATCH – Keyboard Interrupt latch control bit. 0=KINT is the 8042 KINT ANDed with Latched KINT (default), 1=KINT is the latched 8042 KINT.

See Table 23-13, “KYBD. Logical Device 7 [Logical Device Number = 0X07],” on page 209 for a description of this register.

10.11 Keyboard and Mouse PME Generation

The SCH3227/SCH3226/SCH3224/SCH3222 sets the associated PME Status bits when the following conditions occur:

Keyboard Interrupt

- Mouse Interrupt
- Active Edge on Keyboard Data Signal (KDAT)
- Active Edge on Mouse Data Signal (MDAT)

These events can cause a PME to be generated if the associated PME Wake Enable register bit and the global PME_EN bit are set. Refer to Section 13.0, "PME Support," on page 94 for more details on the PME interface logic and refer to Section 24.0, "Runtime Register," on page 213 for details on the PME Status and Enable registers.

The keyboard interrupt and mouse interrupt PMEs can be generated when the part is powered by VCC. The keyboard data and mouse data PMEs can be generated both when the part is powered by VCC, and when the part is powered by VTR (VCC=0).

When using the keyboard and mouse data signals for wakeup, it may be necessary to isolate the keyboard signals (KCLK, KDAT, MCLK, MDAT) from the 8042 prior to entering certain system sleep states. This is due to the fact that the normal operation of the 8042 can prevent the system from entering a sleep state or trigger false PME events. The SCH3227/SCH3226/SCH3224/SCH3222 has “isolation” bits for the keyboard and mouse signals, which allow the keyboard and mouse data signals to go into the wakeup logic but block the clock and data signals from the 8042. These bits may be used anytime it is necessary to isolate the 8042 keyboard and mouse signals from the 8042 before entering a system sleep state.

The bits used to isolate the keyboard and mouse signals from the 8042 are located in Logical Device 7, Register 0xF0 (KRST_GA20) and are defined below. These bits reset on VTR POR only.

Bit[6]M_ISO. Enables/disables isolation of mouse signals into 8042. Does not affect the MDAT signal to The mouse wakeup (PME) logic.

1 = block mouse clock and data signals into 8042

0 = do not block mouse clock and data signals into 8042

Bit[5] K_ISO. Enables/disables isolation of keyboard signals into 8042. Does not affect the KDAT signal to the keyboard wakeup (PME) logic.

1 = block keyboard clock and data signals into 8042

0 = do not block keyboard clock and data signals into 8042

When the keyboard and/or mouse isolation bits are used, it may be necessary to reset the 8042 upon exiting the sleep state. If either of the isolation bits is set prior to entering a sleep state where VCC goes inactive (S3-S5), then the 8042 must be reset upon exiting the sleep mode. Write 0x40 to global configuration register 0x2C to reset the 8042. The 8042 must then be taken out of reset by writing 0x00 to register 0x2C since the bit that resets the 8042 is not self-clearing. Bit 6 of configuration register 0x2C is used to put the 8042 into reset - do not set any of the other bits in register 0x2C, as this may produce undesired results.

It is not necessary to reset the 8042 if the isolation bits are used for a sleep state where VCC does not go inactive (S1, S2).

USER’S NOTE:

Regarding External Keyboard and Mouse:

This is an application matter resulting from the behavior of the external 8042 in the keyboard.

When the external keyboard and external mouse are powered up, the KDAT and MDAT lines are driven low. This sets the KBD bit (D3) and the MOUSE bit (D4) of the PME Wake Status Register since the KDAT and MDAT signals cannot be isolated internal to the part. This causes an nIO_PME assertion to be generated if the keyboard and/or mouse PME events are enabled. Note that the keyboard and mouse isolation bits only prevent the internal 8042 in the part from setting these status bits.

© 2016-2017 Microchip Technology Inc.

Case 1: Keyboard and/or Mouse Powered by VTR

The KBD and/or MOUSE status bits will be set upon a VTR POR if the keyboard and/or mouse are powered by VTR.

In this case, a nIO_PME will not be generated, since the keyboard and mouse PME enable bits are reset to zero on a VTR POR. The BIOS software needs to clear these PME status bits after power-up.

In this case, an nIO_PME will be generated if the enable bits were set for wakeup, since the keyboard and mouse PME enable bits are Bvat powered. Therefore, if the keyboard and mouse are powered by VTR, the enable bits for keyboard and mouse events should be cleared prior to entering a sleep state where VTR is removed (i.e., S4 or S5) to prevent a false PME from being generated. In this case, the keyboard and mouse should only be used as PME and/or wake events from the power states S3 or below.

Case 2: Keyboard and/or Mouse Powered by VCC

The KBD and/or MOUSE status bits will be set upon a VCC POR if the keyboard and/or mouse are powered by VCC. In this case, a nIO_PME and a nIO_PME will be generated if the enable bits were set for wakeup, since the keyboard and mouse PME enable bits are VTRor Vbat powered. Therefore, if the keyboard and mouse are powered by VCC, the enable bits for keyboard and mouse events should be cleared prior to entering a sleep state where VCC is removed (i.e., S3) to prevent a false PME from being generated. In this case, the keyboard and mouse should only be used as PME and/or wake events from the S0 and/or S1 states. The BIOS software needs to clear these PME status bits after power-up.

11.0 GENERAL PURPOSE I/O (GPIO)

The SCH322x provides a set of flexible Input/Output control functions to the system designer through the independently programmable General Purpose I/O pins (GPIO). The GPIO pins can perform basic I/O and many of them can be individually enabled to generate an SMI and a PME.

CAUTION: This device architecture contains registers, controlling GPIOs that may not be brought out to package pins in some specific family members. See Table 2-1 SCH3227, Table 2-2 SCH3226, Table 2-3 SCH3224, or Table 2-4 SCH3222, for the pins that are brought out. Pins which are not brought out must not be used because they are tied to known states internally. Do not change their configurations from their POR defaults, because doing so may cause unpredictable behavior and/or excessive currents, and therefore may damage the device and/or the system.

11.1 GPIO Pins

The following pins include GPIO functionality. These pins are defined in the table below.

TABLE 11-1: GPIO PIN FUNCTIONALITY

GPIO Pin Name (Default Func/ Alternate Funcs)	GPIO PWRWELL	VTR POR	SMI/PME	Note
GP10 GP10 / RXD3	VCC	0x01		11-3
GP11 GP11 / TXD3	VTR	0x01		11-3
GP12 GP12 / nDCD3	VTR	0x01		11-3
GP13 GP13 / nRI3	VTR	0x01	PME	11-3, 11-4
GP14 GP14 / nDSR3	VTR	0x01		11-3
GP15 GP15 / nDTR3	VTR	0x01		11-3
GP16 GP16 / nCTS3	VCC	0x01		11-3
GP17 GP17 / nRTS3	VTR	0x01		11-3
KDAT/GP21	VCC	0x8C	SMI/PME	11-1, 11-3
KCLK/GP22	VCC	0x8C	SMI/PME	11-1, 11-3
GP27/nIO_SMI /P17	VCC	0x01	nIO_SMI/PME	11-1
nFPRST / GP30	VTR	0x05		11-3
GP31 GP31 / nRI4	VTR	0x01	PME	11-3, 11-4 11-5
MDAT/GP32	VCC	0x84	SMI/PME	11-1 11-3
MCLK/GP33	VCC	0x84	SMI/PME	11-1 11-3
GP34 GP34 / nDTR4	VTR	0x01		11-3 11-5
GP36/nKBDRST	VCC	0x01	-	
GP37/A20M	VCC	0x01	-	
GP40/DRVDEN0	VCC	0x01	-	
GP42/nIO_PME	VTR	0x01	SMI	
nIDE_RSTDRV / GP44 GP44 / TXD6	VTR	0x01		11-3

© 2016-2017 Microchip Technology Inc.

TABLE 11-1: GPIO PIN FUNCTIONALITY (CONTINUED)

GPIO Pin Name (Default Func/ Alternate Funcs)	GPIO PWRWELL	VTR POR	SMI/PME	Note
nPCI_RST1 / GP45 GP45 / RXD6	VTR	0x01		11-3
nPCI_RST2 / GP46 GP46 / nSCIN6	VTR	0x01	PME	11-3, 11-4
nPCI_RST3 / GP47 GP47 / nSCOUT6	VTR	0x01		11-3
GP50/nRI2	VCC	0x01	PME	11-1
GP51/nDCD2	VCC	0x01	PME	11-1
GP52/RXD2(IRRX)	VCC	0x01	PME	11-1
GP53/TXD2 (IRTX)	VCC	0x01	PME	11-1
GP54/nDSR2	VCC	0x01	SMI/PME	11-1
GP55/nRTS2	VCC	0x01	SMI/PME	11-1
GP56/nCTS2	VCC	0x01	SMI/PME	11-1
GP57/nDTR2	VCC	0x01	SMI/PME	11-1
GP60/nLED1/WDT	VTR	0x01	SMI/PME	11-1
GP61/nLED2/ CLKO	VTR	0x01	SMI/PME	11-1
GP62 GP62 / nCTS4	VTR	0x01		11-3
GP63 GP63 / nDCD4	VTR	0x01		11-3
GP64 GP64 / RXD4	VTR	0x01		11-3
GP65 GP65 / TXD4	VTR	0x01		11-3
GP66 GP66 / nDCR4	VTR	0x01		11-3
GP67 GP67 / nRTS4	VTR	0x01		11-3

Note 11-1 These pins are inputs to VCC and VTR powered logic. The logic for the GPIO is on VCC - it is also a wake event which goes to VTR powered logic.

Note 11-2 This pin's primary function (power up default function) is not GPIO function; however, the pin can be configured a GPIO Alternate function.

Note 11-3 Not all pins are available in all family members. Also, in some cases incorrect usage can cause damage. See the CAUTION note at the beginning of this chapter: Section 11.0, General Purpose I/O (GPIO).

Note 11-4 The PME is for the RI signal only. Note that this may not be available for all SCH322x devices. Refer to Table 11-2, "SCH322x General Purpose I/O Port Assignments," on page 88 for more details.

Note 11-5 This pin is an OD type buffer in output mode. It cannot be configured as a Push-Pull Output buffer

11.2 Description

Each GPIO port has a 1-bit data register and an 8-bit configuration control register. The data register for each GPIO port is represented as a bit in one of the 8-bit GPIO DATA Registers, GP1 to GP6. The bits in these registers reflect the value of the associated GPIO pin as follows. Pin is an input: The bit is the value of the GPIO pin. Pin is an output: The value written to the bit goes to the GPIO pin. Latched on read and write. All of the GPIO registers are located in the PME block see Section 24.0, "Runtime Register," on page 213. The GPIO ports with their alternate functions and configuration state register addresses are listed in Table 11-2.

TABLE 11-2: SCH322X GENERAL PURPOSE I/O PORT ASSIGNMENTS

Run-Time REG Offset (HEX)	DEF	ALT. FUNC. 1	ALT. FUNC. 2	ALT. FUNC. 3	GP Data REG	GP Data Bit
23	GPIO10	RXD3			GP1 OFFSET 4B	0
24	GPIO11	TXD3				1
25	GPIO12	nDCD3				2
26	GPIO13	nRI3				3
27	GPIO14	nDSR3				4
29	GPIO15	nDTR3				5
2A	GPIO16	nCTS3				6
2B	GPIO17	nRTS3				7
	Reserved				GP2 OFFSET 4C	0
2C	KDAT (See Note 11-6)	GPIO21				1
2D	KCLK (See Note 11-6)	GPIO22				2
	Reserved					4:3
	Reserved					5
	Reserved					6
32	GPIO27	SMI Output	P17 (See Note 11-6)			7
33	nFPRST	GPIO30			GP3 OFFSET 4D	0
34	GPIO31	nRI4				1
35	MDAT (See Note 11-6)	GPIO32				2
36	MCLK (See Note 11-6)	GPIO33				3
37	GPIO34	nDTR4				4
	Reserved					5
39	GPIO36	Keyboard Reset				6
3A	GPIO37	Gate A20				7
3B	GPIO40	Drive Density Select 0			GP4 OFFSET 4E	0
	Reserved					1
3D	GPIO42	nIO_PME				2
	Reserved					3
6E	GPIO44	TXD6				4
6F	GPIO45	RXD6				5
72	GPIO46	nSCIN6				6
73	GPIO47	nSCOUT6				7

© 2016-2017 Microchip Technology Inc.

TABLE 11-2: SCH322X GENERAL PURPOSE I/O PORT ASSIGNMENTS (CONTINUED)

Run-Time REG Offset (HEX)	DEF	ALT. FUNC. 1	ALT. FUNC. 2	ALT. FUNC. 3	GP Data REG	GP Data Bit
3F	GPIO50	Ring Indicator 2			GP5 OFFSET 4F	0
40	GPIO51	Data Carrier Detect 2				1
41	GPIO52	Receive Serial Data 2				2
42	GPIO53	Transmit Serial Data 2				3
43	GPIO54	Data Set Ready 2				4
44	GPIO55	Request to Send 2				5
45	GPIO56	Clear to Send 2				6
46	GPIO57	Date Terminal Ready				7
47	GPIO60 Note 11-7	nLED1	WDT	WDT	GP6 OFFSET 50	0
48	GPIO61 Note 11-7	nLED2	CLKO			1
54	GPIO62 Note 11-8	nCTS4				2
55	GPIO63 Note 11-8	nDCD4				3
56	GPIO64 Note 11-8	RXD4				4
57	GPIO65 Note 11-8	TXD4				5
58	GPIO66 Note 11-8	nDSR4				6
59	GPIO67 Note 11-8	nRTS4				7

Note 11-6 When this pin function is selected, the associated GPIO pins have bi-directional functionality.

Note 11-7 These pins have Either Edge Triggered Interrupt (EETI) functionality. See Section 11.5, "GPIO PME and SMI Functionality," on page 91 for more details.

Note 11-8 These pins have VID compatible inputs.

11.3 GPIO Control

Each GPIO port has an 8-bit control register that controls the behavior of the pin. These registers are defined in Section 24.0, "Runtime Register," on page 213 section of this specification.

Each GPIO port may be configured as either an input or an output. If the pin is configured as an output, it can be programmed as open-drain or push-pull. Inputs and outputs can be configured as non-inverting or inverting. Bit[0] of each GPIO Configuration Register determines the port direction, bit[1] determines the signal polarity, and bit[7] determines the output driver type select. The GPIO configuration register Output Type select bit[7] applies to GPIO functions and the nSMI Alternate functions.

The basic GPIO configuration options are summarized in Table 11-3, "GPIO Configuration Option".

TABLE 11-3: GPIO CONFIGURATION OPTION

Selected Function	Direction Bit	Polarity Bit	Description
	B0	B1	
GPIO	0	0	Pin is a non-inverted output.
	0	1	Pin is an inverted output.
	1	0	Pin is a non-inverted input.
	1	1	Pin is an inverted input.

11.4 GPIO Operation

The operation of the GPIO ports is illustrated in Figure 11-1.

When a GPIO port is programmed as an input, reading it through the GPIO data register latches either the inverted or non-inverted logic value present at the GPIO pin. Writing to a GPIO port that is programmed as an input has no effect (Table 11-4).

When a GPIO port is programmed as an output, the logic value or the inverted logic value that has been written into the GPIO data register is output to the GPIO pin. Reading from a GPIO port that is programmed as an output returns the last value written to the data register (Table 11-4). When the GPIO is programmed as an output, the pin is excluded from the PME and SMI logic.

FIGURE 11-1: GPIO FUNCTION ILLUSTRATION

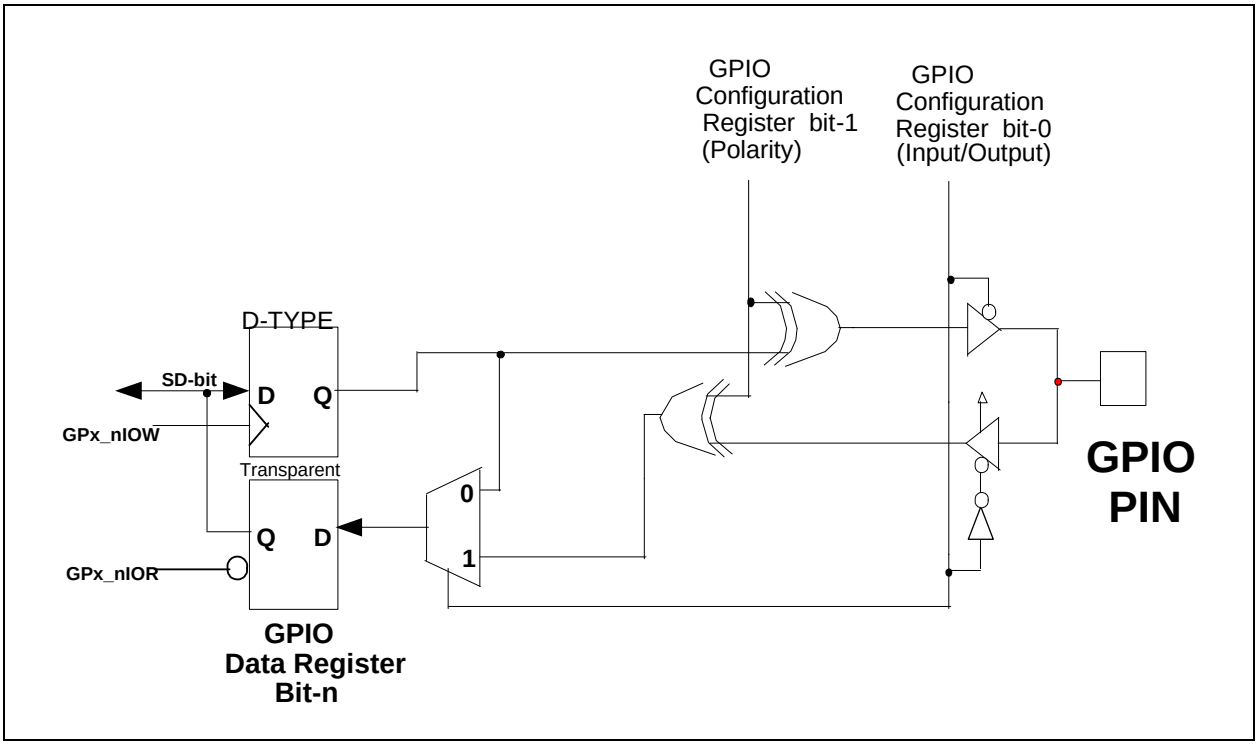

Note: Figure 11-1 is for illustration purposes only and is not intended to suggest specific implementation details.

© 2016-2017 Microchip Technology Inc.

TABLE 11-4: GPIO READ/WRITE BEHAVIOR

Host Operation	GPIO Input Port	GPIO Output Port
READ	LATCHED VALUE OF GPIO PIN	LAST WRITE TO GPIO DATA REGISTER
WRITE	NO EFFECT	BIT PLACED IN GPIO DATA REGISTER

11.5 GPIO PME and SMI Functionality

The SCH3227/SCH3226/SCH3224/SCH3222 provides GPIOs that can directly generate a PME. The polarity bit in the GPIO control registers select the edge on these GPIO pins that will set the associated status bit in a PME Status. For additional description of PME behavior see Section 13.0, "PME Support," on page 94. The default is the low-to-high transition. In addition, the SCH3227/SCH3226/SCH3224/SCH3222 provides GPIOs that can directly generate an SMI.

The following GPIOs are dedicated wakeup GPIOs with a status and enable bit in the PME status and enable registers:

GP21-GP22,GP27, GP32-GP33 are controlled by PME_STS1, PME_STS3, PME_EN1, PME_EN3 registers.

GP50-GP57 are controlled by PME_STS5, PME_EN5 registers.

GP60, GP61 are controlled by PME_STS6, and PME_EN6 registers.

The following GPIOs can directly generate an SMI and have a status and enable bit in the SMI status and enable registers.

GP21, GP22, GP54, GP55, GP56, GP57, GP60 are controlled by SMI_STS3, and SMI_EN3 registers.

GP32, GP33, GP42, GP61 are controlled by SMI_STS4, and SMI_EN4 registers.

The following GPIOs have "either edge triggered interrupt" (EETI) input capability: GP21, GP22, GP60, GP61. These GPIOs can generate a PME and an SMI on both a high-to-low and a low-to-high edge on the GPIO pin. These GPIOs have a status bit in the PME_STS6 status register that is set on both edges. The corresponding bits in the PME and SMI status registers are also set on both edges.

11.6 Either Edge Triggered Interrupts

Three GPIO pins are implemented such that they allow an interrupt (PME or SMI) to be generated on both a high-to-low and a low-to-high edge transition, instead of one or the other as selected by the polarity bit.

The either edge triggered interrupts (EETI) function as follows: If the EETI function is selected for the GPIO pin, then the bits that control input/output, polarity and open drain/push-pull have no effect on the function of the pin. However, the polarity bit does affect the value of the GP bit.

A PME or SMI interrupt occurs if the PME or SMI enable bit is set for the corresponding GPIO and the EETI function is selected on the GPIO. The PME or SMI status bits are set when the EETI pin transitions (on either edge) and are cleared on a write of '1'. There are also status bits for the EETIs located in the PME_STSX register, which are also cleared on a write of '1'. The MSC_STS register provides the status of all of the EETI interrupts within one register. The PME, SMI or MSC status is valid whether or not the interrupt is enabled and whether or not the EETI function is selected for the pin.

Miscellaneous Status Register (MSC_STS) is for the either edge triggered interrupt status bits. If the EETI function is selected for a GPIO then both a high-to-low and a low-to-high edge will set the corresponding MSC status bits. Status bits are cleared on a write of '1'. See Section 24.0, "Runtime Register," on page 213 for more information.

The configuration register for the either edge triggered interrupt status bits is defined in Section 24.0.

11.7 LED Functionality

The SCH3227/SCH3226/SCH3224/SCH3222 provides LED functionality on two GPIOs, GP60 and GP61. These pins can be configured to turn the LED on and off and blink independent of each other through the LED1 and LED2 runtime registers at offset 0x5D and 0x5E from the base address located in the primary base I/O address in Logical Device A.

The LED pins (GP60 and GP61) are able to control the LED while the part is under VTR power with VCC removed. In order to control a LED while the part is under VTR power, the GPIO pin must be configured for the LED function and either open drain or push-pull buffer type. In the case of open-drain buffer type, the pin is capable of sinking current to control the LED. In the case of push-pull buffer type, the part will source current. The part is also able to blink the LED under VTR power. The LED will not blink under VTR power (VCC removed) if the external 32KHz clock is not connected.

The LED pins can drive a LED when the buffer type is configured to be push-pull and the part is powered by either VCC or VTR, since the buffers for these pins are powered by VTR. This means they will source their specified current from VTR even when VCC is present.

The LED control registers are defined in Section 24.0, "Runtime Register," on page 213.

© 2016-2017 Microchip Technology Inc.

12.0 SYSTEM MANAGEMENT INTERRUPT (SMI)

The SCH322x implements a “group” nIO_SMI output pin. The System Management Interrupt is a non-maskable interrupt with the highest priority level used for OS transparent power management. The nSMI group interrupt output consists of the enabled interrupts from each of the functional blocks in the chip and many of the GPIOs and the Fan tachometer pins. The GP27/nIO_SMI/P17 pin, when selected for the nIO_SMI function, can be programmed to be active high or active low via the polarity bit in the GP27 register. The output buffer type of the pin can be programmed to be open-drain or push-pull via bit 7 of the GP27 register. The nIO_SMI pin function defaults to active low, open-drain output.

The interrupts are enabled onto the group nSMI output via the SMI Enable Registers 1 to 4. The nSMI output is then enabled onto the group nIO_SMI output pin via bit[7] in the SMI Enable Register 2. The SMI output can also be enabled onto the serial IRQ stream (IRQ2) via Bit[6] in the SMI Enable Register 2. The internal SMI can also be enabled onto the nIO_PME pin. Bit[5] of the SMI Enable Register 2 (SMI_EN2) is used to enable the SMI output onto the nIO_PME pin (GP42). This bit will enable the internal SMI output into the PME logic through the DEVINT_STS bit in PME_STS3.

An example logic equation for the nSMI output for SMI registers 1 and 2 is as follows:

nSMI = (EN_PINT and IRQ_PINT) or (EN_U2INT and IRQ_U2INT) or (EN_U1INT and IRQ_U1INT) or (EN_FINT and IRQ_FINT) or (EN_MINT and IRQ_MINT) or (EN_KINT and IRQ_KINT) or (EN_IRINT and IRQ_IRINT) or (ENP12 and IRQ_P12) or (SPEMSE_EN and SPEMSE_STS)

Note:	The prefixes EN and IRQ are used above to indicate SMI enable bit and SMI status bit respectively.

12.1 SMI Registers

The SMI event bits for the GPIOs and the Fan tachometer events are located in the SMI status and Enable registers 3-5. The polarity of the edge used to set the status bit and generate an SMI is controlled by the polarity bit of the control registers. For non-inverted polarity (default) the status bit is set on the low-to-high edge. If the EETI function is selected for a GPIO then both a high-to-low and a low-to-high edge will set the corresponding SMI status bit. Status bits for the GPIOs are cleared on a write of ‘1’.

The SMI logic for these events is implemented such that the output of the status bit for each event is combined with the corresponding enable bit in order to generate an SMI.

The SMI registers are accessed at an offset from PME_BLK (see Section 24.0, "Runtime Register," on page 213 for more information).

The SMI event bits for the super I/O devices are located in the SMI status and enable register 1 and 2. All of these status bits are cleared at the source except for IRINT, which is cleared by a read of the SMI_STS2 register; these status bits are not cleared by a write of ‘1’. The SMI logic for these events is implemented such that each event is directly combined with the corresponding enable bit in order to generate an SMI.

See the Section 24.0 for the definition of these registers.

13.0 PME SUPPORT

The SCH322x offers support for power management events (PMEs), also referred to as a System Control Interrupt (SCI) events in an ACPI system. A power management event is indicated to the chipset via the assertion of the nIO_PME signal when in S5 or below power states.

APPLICATION NOTE: Software must properly configure the enable and status bits for the individual PME events in the registers described below.

Table 13-1 describes the PME interface.

TABLE 13-1: PME INTERFACE

Name	Buffer	Power Well	Description
nIO_PME	(O12/OD12)	VTR	General Purpose I/O. Power Management Event Output. This active low Power Management Event signal allows this device to request wakeup in S5 and below.

13.1 PME Events

All PME the events asserted on nIO_PME are listed in Table 13-2.

TABLE 13-2: PME EVENTS

Events	PME	Comment
Mouse		
by IRQ	Y (from group SMI)	
DATA pin edge sensitive	Y	
Specific Mouse Click	Y	See Section 13.5, "Wake on Specific Mouse Click," on page 96 for details
Keyboard		
Any Key	Y	
Specific Key	Y	
by IRQ	Y (from group SMI)	
Power button input		
Last state before Power Loss	Y	
PIO	Y (from group SMI)	
UART-1		
by IRQ	Y (from group SMI)	
by nRI1 pin	Y	
UART-2		
by IRQ	Y (from group SMI)	
by nRI2 pin	Y	
UART-3		
by IRQ	Y (from group SMI)	
by nRI3 pin	Y	
UART-4		
by IRQ	Y (from group SMI)	
by nRI4 pin	Y	
UART-5		
by IRQ	Y (from group SMI)	
by nRI5 pin	Y	

© 2016-2017 Microchip Technology Inc.

TABLE 13-2: PME EVENTS (CONTINUED)

Events	PME	Comment
UART-6		
by IRQ	Y (from group SMI)	
by nRI6 pin	Y	
Hardware Monitor	nHWM_INT	
Watch Dog Timer	Y	
GPIO, total 15 pins	Y	
Low-Battery	Y	Detect on VCC POR only not a S3 wakeup either

The PME function is controlled by the PME status and enable registers in the runtime registers block, which is located at the address programmed in configuration registers 0x60 and 0x61 in Logical.

There are four types of registers which control PME events:

1. PME Wake Status register (PME_STS1, PME_STS3, PME_STS5, PME_STS6.) provides the status of individual wake events.
2. PME Wake Enable (PME_EN1, PME_EN3, PME_EN5, PME_EN6) provides the enable for individual wake events.
3. PME Pin Enable Register (PME_EN,) provides an enable for the PME output pins.
4. PME Pin Status Register (PME_STS) provides the status for the PME output pins.

See Section 24.0, "Runtime Register," on page 213 for detailed register description.

The following describes the behavior to the PME status bits for each event:

Each wake source has a bit in a PME Wake Status register which indicates that a wake source has occurred. The PME Wake Status bits are “sticky“(unless otherwise stated in bit description in Section 24.0): once a status bit is set by the wake-up event, the bit will remains set until cleared by writing a ‘1’ to the bit.

Each PME Wake Status register has a corresponding PME Wake Enable Register.

If the corresponding bit in both in a PME Wake Status register and the PME Wake Enable Register are set then the PME Pin Status Register bit is set. If both corresponding PME Pin Status and the PME Pin Enable Register bit are set then the IO_PME pinIO_PME pin will asserted.

For the GPIO events, the polarity of the edge used to set the status bit and generate a PME is controlled by the polarity bit of the GPIO control register. For non-inverted polarity (default) the status bit is set on the low-to-high edge. If the EETI function is selected for a GPIO then both a high-to-low and a low-to-high edge will set the corresponding PME status bits. Status bits are cleared on a write of '1'.

The PME Wake registers also include status and enable bits for the HW Monitor Block.

See Section 10.11, "Keyboard and Mouse PME Generation," on page 84 for information about using the keyboard and mouse signals to generate a PME.

13.2 Enabling SMI Events onto the PME Pin

There is a bit in the PME Status Register 3 to show the status of the internal “group” SMI signal in the PME logic (if bit 5 of the SMI_EN2 register is set). This bit, DEVINT_STS, is at bit 3 of the PME_STS3 register. When this bit is clear, the group SMI output is inactive. When bit is set, the group SMI output is active.The corresponding Wake-up enable bit is DEVINT_EN, is at bit 3 of the PME_EN3 register.

Bit 5 of the SMI_EN2 register must also be set. This bit is cleared on a write of '1'.

13.3 PME Function Pin Control

The GP42/nIO_PME pin, when selected for the nIO_PME function, can be programmed to be active high or active low via the polarity bit in the GP42 register. The output buffer type of the pin can be programmed to be open-drain or push-pull via bit 7 of the GP42 register. The nIO_PME pin function defaults to active low, open-drain output; however the GP42/nIO_PME pin defaults to the GP42 function.

In the SCH3227/SCH3226/SCH3224/SCH3222 the nIO_PME pin can be programmed to be an open drain, active low, driver. The SCH3227/SCH3226/SCH3224/SCH3222 nIO_PME pin are fully isolated from other external devices that might pull the signal low; i.e., the nIO_PME pin are capable of being driven high externally by another active device or pull-up even when the SCH3227/SCH3226/SCH3224/SCH3222 VCC is grounded, providing VTR power is active. The IO_PME pin driver sinks 6mA at 0.55V max (see section 4.2.1.1 DC Specifications in the "PCI Local Bus Specification, Revision 2.2, December 18, 1998).

13.4 Wake on Specific Key Code

The SCH3227/SCH3226/SCH3224/SCH3222 Wake on Specific Key Code feature is enabled for the assertion of the nIO_PME signal in SX power states by the SPEKEY bit in the PME_STS6 register. This bit defaults to enabled and is Vbat powered.

At Vbat POR the Wake on Specific Key Code feature is disabled. During the first VTR POR and VCC POR the Wake on Specific Key Code feature remains disabled. Software selects the precise Specific Key Code event (configuration) to wake the system and then enables the feature via the SPEKEY bit in the PME_STS6 register. The system then may go the sleep and/or have a power failure. After returning to or remaining in S5 sleep, the system will fully awake by a Wake on Specific Key Code The Specific Key Code configuration and the enable for the nIO_PME are retained via Vbat POR backed registers.

The SCH3227/SCH3226/SCH3224/SCH3222 Wake on Specific Key Code feature is enabled for assertion of the nIO_PME signal when in S3 power state or below by the SPEKEY bit in the PME_EN6 register. This bit defaults to disabled and is VTR powered.

13.5 Wake on Specific Mouse Click

The SPESME SELECT field in the Mouse_Specific_ Wake Register selects which mouse event is routed to the PME_STS6 if enabled by PME_EN6. The KB_MSE_SWAP bit in the Mouse_Specific_ Wake Register can swap the Mouse port and Keyboard interfaces internally.

The Lock bit in the Mouse_Specific_ Wake Register provides a means of changing access to read only to prevent tampering with the Wake on Mouse settings. The other bits in the Mouse_Specific_ Wake Register are VBAT powered and reset on VBAT POR; therefore, the mouse event settings are maintained through a power failure. The lock bit also controls access to the DBLCLICK Register.

The DBLCLICK register contains a numeric value that determines the time interval used to check for a double mouse click. The value is the time interval between mouse clicks. For example, if DBLCLICK is set to 0.5 seconds, you have one half second to click twice for a double-click.

The larger the value in the DBLCLICK Register, the longer you can wait between the first and second click for the SCH3227/SCH3226/SCH3224/SCH3222 to interpret the two clicks as a double-click mouse wake event. If the DBLCLICK value is set to a very small value, even quick double clicks may be interpreted as two single clicks.

The DBLCLICK register has a six bit weighted sum value from 0 to 0x3Fh which provides a double click interval between 0.0859375 and 5.5 seconds. Each incremental digit has a weight of 0.0859375 seconds.

The DBLCLICK Register is VBAT powered and reset on VBAT POR; therefore, the double click setting is maintained through a power failure. The default setting provides a 1.03125 second time interval.

DBLCLICK Writing to the DBLCLICK register shall reset the Mouse Wake-up internal logic and initialize the Mouse Wake-up state machines.The SPEMSE_EN bit in of the CLOCKI32 configuration register at 0xF0 in Logical Device A is used to control the “Wake on Specific Mouse Click” feature. This bit is used to turn the logic for this feature on and off. It will disable the 32KHz clock input to the logic. The logic will draw no power when disabled. The bit is defined as follows:

0= "Wake on Specific Mouse Click" logic is on (default)

1= "Wake on Specific Mouse Click" logic is off

The generation of a PME for this event is controlled by the PME enable bits (SPEMSE_EN bit in the PME_EN6 register and in the SMI_EN2 register) when the logic for feature is turned on. See Section 13.5, "Wake on Specific Mouse Click," on page 96.

APPLICATION NOTE: The Wake on Specific Mouse Click feature requires use of the M_ISO bit in the KRST_GA20 register. See Application Note 8.8 titled “Keyboard and Mouse Wake-up Functionality”.

© 2016-2017 Microchip Technology Inc.

When using the wake on specific mouse event, it may be necessary to isolate the Mouse Port signals (MCLK, MDAT) from the 8042 prior to entering certain system sleep states. This is due to the fact that the normal operation of the 8042 can prevent the system from entering a sleep state or trigger false PME events. SCH3227/SCH3226/SCH3224/SCH3222 has an “isolation” bit for the mouse signals, which allows the mouse data signals to go into the wake-up logic but block the clock and data signals from the 8042.

When the mouse isolation bit are used, it may be necessary to reset the 8042 upon exiting the sleep state. If M_SIO bit is set prior to entering a sleep state where VCC goes inactive (S3-S5), then the 8042 must be reset upon exiting the sleep mode. Write 0x40 to global configuration register 0x2C to reset the 8042. The 8042 must then be taken out of reset by writing 0x00 to register 0x2C since the bit that resets the 8042 is not self-clearing. Caution: Bit 6 of configuration register 0x2C is used to put the 8042 into reset - do not set any of the other bits in register 0x2C, as this may produce undesired results.

© 2016-2017 Microchip Technology Inc.

FIGURE 13-1: 8042 ISOLATION AND KEYBOARD AND MOUSE PORT SWAP REPRESENTATION

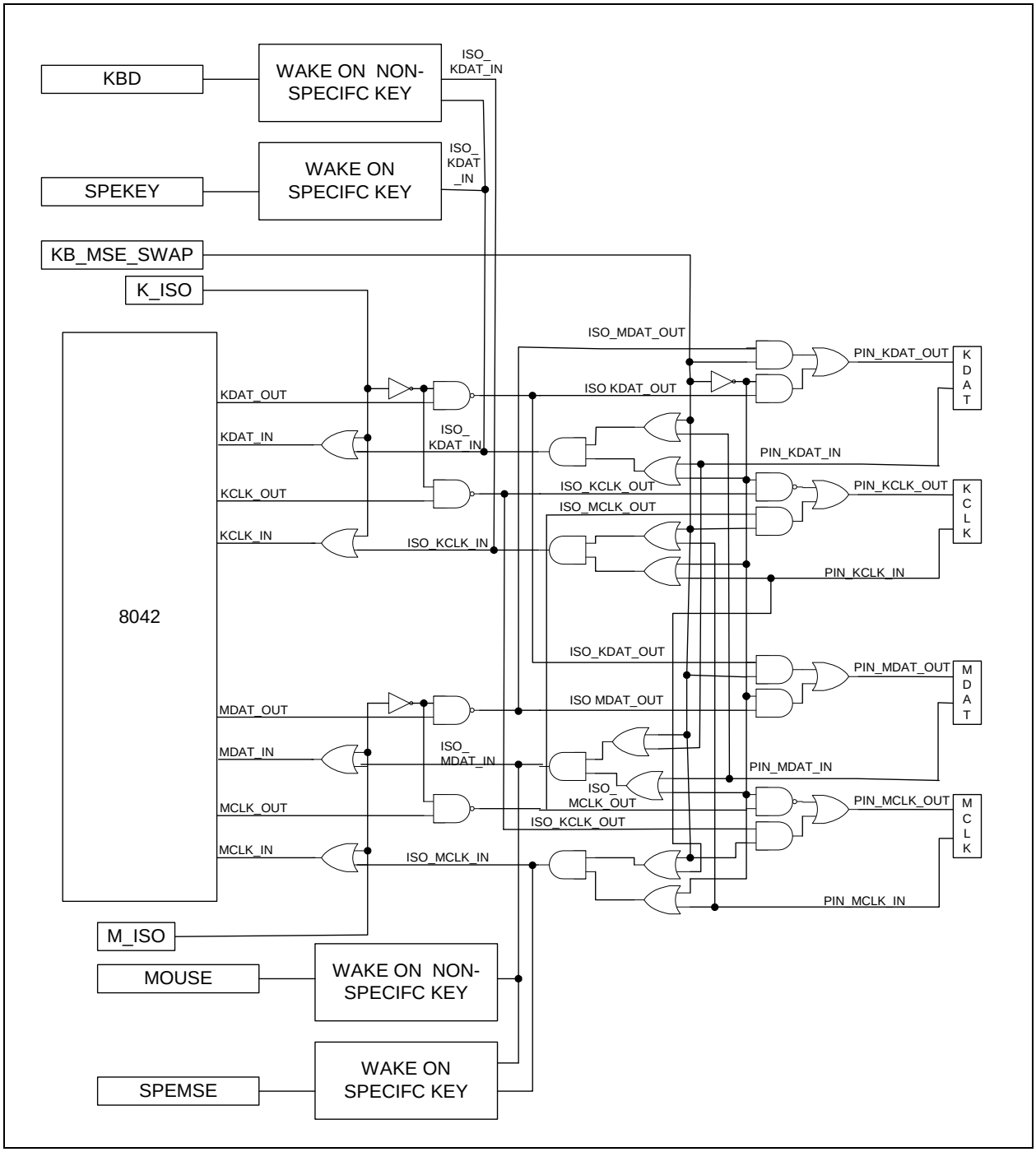

Note: This figure is for illustration purposes only and not meant to imply specific implementation details.

© 2016-2017 Microchip Technology Inc.

14.0 WATCHDOG TIMER

The SCH322x contains a Watchdog Timer (WDT). The Watchdog Time-out status bit may be mapped to an interrupt through the WDT_CFG Runtime Register.

The SCH322x WDT has a programmable time-out ranging from 1 to 255 minutes with one minute resolution, or 1 to 255 seconds with 1 second resolution. The units of the WDT timeout value are selected via bit[7] of the WDT_TIMEOUT register. The WDT time-out value is set through the WDT_VAL Runtime register. Setting the WDT_VAL register to 0x00 disables the WDT function (this is its power on default). Setting the WDT_VAL to any other non-zero value will cause the WDT to reload and begin counting down from the value loaded. When the WDT count value reaches zero the counter stops and sets the Watchdog time-out status bit in the WDT_CTRL Runtime register.

Note: Regardless of the current state of the WDT, the WDT time-out status bit can be directly set or cleared by the Host CPU.

Note 14-1 To set the WDT for time X minutes, the value of X+1 minutes must be programmed. To set the WDT for X seconds, the value of X+1 seconds must be programmed.

Two system events can reset the WDT: a Keyboard Interrupt or a Mouse Interrupt. The effect on the WDT for each of these system events may be individually enabled or disabled through bits in the WDT_CFG Runtime register. When a system event is enabled through the WDT_CFG register, the occurrence of that event will cause the WDT to reload the value stored in WDT_VAL and reset the WDT time-out status bit if set. If both system events are disabled, the WDT_VAL register is not re-loaded.

The Watchdog Timer may be configured to generate an interrupt on the rising edge of the Time-out status bit. The WDT interrupt is mapped to an interrupt channel through the WDT_CFG Runtime register. When mapped to an interrupt the interrupt request pin reflects the value of the WDT time-out status bit.

The host may force a Watchdog time-out to occur by writing a "1" to bit 2 of the WDT_CTRL (Force WD Time-out) Runtime register. Writing a "1" to this bit forces the WDT count value to zero and sets bit 0 of the WDT_CTRL (Watchdog Status). Bit 2 of the WDT_CTRL is self-clearing.

See the Section 24.0, "Runtime Register" for description of these registers.

15.0 PROGRAMMABLE CLOCK OUTPUT

A CLK_OUT pin is available on the SCH322x. This will output a programmable frequency between 0.5 Hz to 16 Hz, and have the following characteristics:

- Must run when Vcc if off - could use 32Khz clock
- Accuracy is not an issue
- CLOCK_OUT register at offset 3Ch in runtime registers with the following programming:
  - Options for 0.25, 0.5, 1, 2, 4, 8, or 16 Hz

APPLICATION NOTE: No attempt has been made to synchronize the clock. As a result, glitches will occur on the clock output when different frequencies are selected.

CLOCK Output Control Register VTR POR = 0x00	3C (R/W)	Bit[0] Enable 1= Output Enabled 0= Disable Clock output Bit[3:1] Frequency Select 000= 0.25 Hz 001= 0.50 Hz 010= 1.00 Hz 011= 2.00 Hz 100= 4.00 Hz 101= 8.00 Hz 110= 16 hz 111 = reserved Bit[7:4] Reserved

© 2016-2017 Microchip Technology Inc.

16.0 RESET GENERATION

The SCH322x family has a Reset Generator with the following characteristics:

- output is open-drain PWRGD_OUT
- 3.3V, 3.3V VTR and 5V voltage trip monitors are ALWAYS a source for the PWRGD_OUT.
- An internal version of nTHERMTRIP signal from the HW monitor block, can be a source of PWRGD_OUT, selectable via a bit in the RESGEN register.
- A 1.6 sec watchdog timer can be a source for PWRGD_OUT, selectable via a bit in the RESGEN register. See Section 16.1, "Watchdog Timer for Resets on VCC_POR," on page 102 for more details.
- The output pulse width is selectable via a strap option (see Note 2-15 on page 29), between 200 msec (default) or 500 msec. This pulse is applied to PWRGD_OUT. The RESGEN strap is sampled at the deaserting edge of PCIRST# or VCC POR. The following table summarizes the strap option programmming.

TABLE 16-1: RESGEN STRAP OPTION

RESGEN	Delay
1	200 msec delay (approximate) default
0	500 msec delay (approximate)

The programming for the RESGEN function is in the REGEN register, runtime register offset 1Dh as shown in Table 16-2.

TABLE 16-2: RESGEN PROGRAMMING

RESGEN default = 00h	1Dh (R/W)	Reset Generator Bit[0] WDT2_EN: Enable Watchdog timer Generation / Select 0= WDT Enabled - Source for PWRGD_OUT (Default) 1= WDT Disabled - Not source for PWRGD_OUT Bit[1] ThermTrip Source Select 0 = Thermtrip not source for PWRGD_OUT ((Default) 1 = Thermtrip source for PWRGD_OUT Bit[2] WDT2_CTL: WDT input bit Bit[7:3] Reserved

FIGURE 16-1: RESET GENERATION CIRCUIT (FOR ILLUSTRATIVE PURPOSES ONLY)

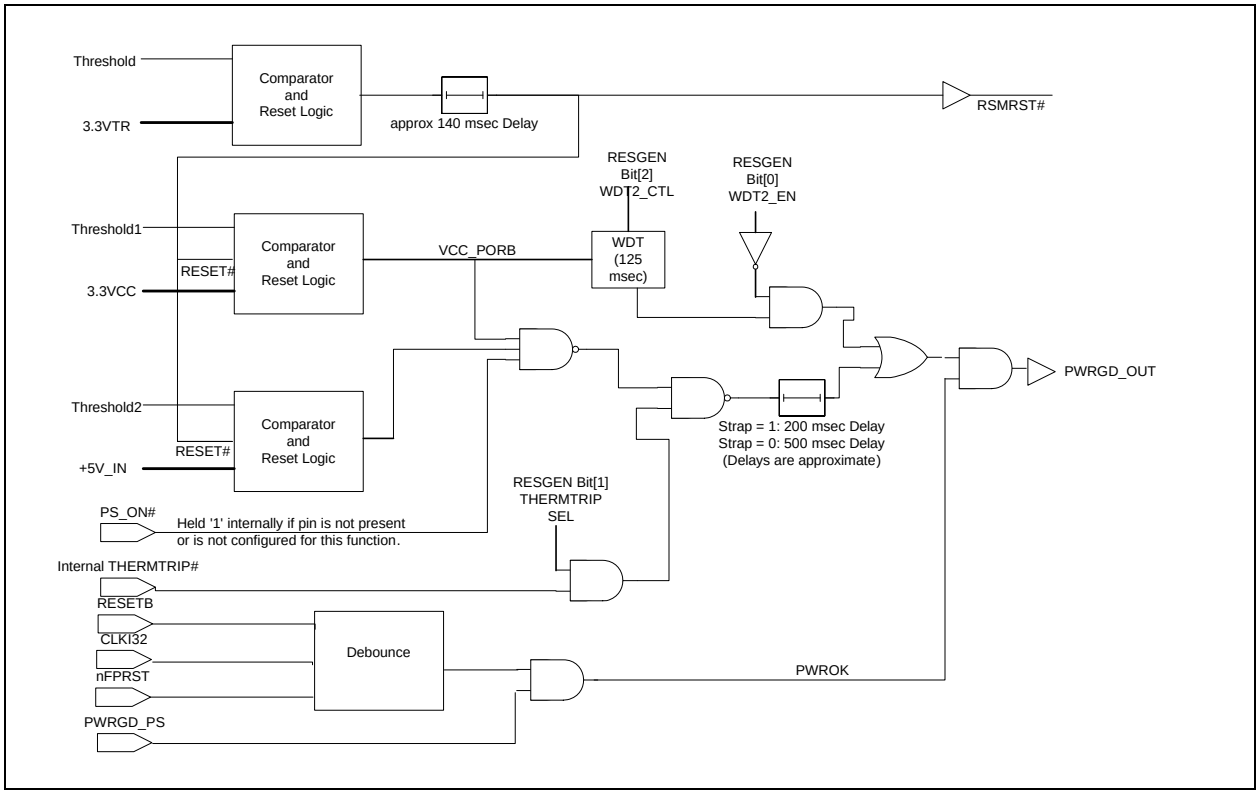

16.1 Watchdog Timer for Resets on VCC_POR

The current WDT implementation resets after a VCC_POR, and does not begin counting until after WDT2_CTL bit is toggled. The current operation of the RESGEN watchdog timer is as follows:

1. Feature enable/disable via a bit in a control register, accessible from the LPC. When enabled, the RESGEN WDT output is selected as a source for the PWRGD_OUT signal.
2. Watchdog input bit in a the RESGEN register, WDT2_CTL, reset to 0 via VCC_POR, accessible from the LPC. See Table 16-3.
3. The counter is reset by VCC_POR. The counter will remain reset as long as VCC_POR is active.
4. Counter will start when the following conditions are met:
   a) VCC_POR is released AND
   b) The WDT2_CTL bit is toggled from 0 to 1
5. If the host toggles the WDT2_CTL bit in the RESGEN control register, then the counter is reset to 1.6 seconds and begins to count.
6. If the host does not toggle the WDT2_CTL bit in the RESGEN register by writing a 0 followed by a 1, before the WDT has timed out, a 100 msec pulse is output.
7. After a timeout has occurred, a new timeout cycle does not begin until the host toggles the WDT2_CTL bit in RESGEN register, by writing a 0 followed by a 1. This causes the counter to be reset to 1.6 seconds and begins to count again.

© 2016-2017 Microchip Technology Inc.

TABLE 16-3: WDT OPERATION FOLLOWING VCC_POR OR WDT2_CTL WRITING

WDT2_CTL	VCC_PORB	RST_WDT2B	Counter Reset	Condition
x	0	x	Yes	Power On
0	1	1	No	State after VCC_PORB. Counter starts Counting
0->1	1	1	Yes	Write 1 to WDT2_CTL. Counter reset and starts counting.
1->0	1	1	No	Write 0 to WDT2_CTL. No affect - counter running.
x	1	0	Yes	Counter timeout under normal conditions.

16.2 Voltage Scaling and Reset Generator Tolerances

The 5V supply is scaled internally. The input resistance is 20kohms (min). The voltage trip point is 4.45V (nominal) with a tolerance of ±0.15V (range: 4.3V-4.6V).

For the 3.3V VTR and 3.3V supplies, the voltage trip point is 2.8V (nominal) with a tolerance of ±0.1V (range: 2.7V-2.9V).

Refer to FIGURE 16-1: on page 102.

17.0 BUFFERED PCI OUTPUTS

17.1 Buffered PCI Outputs Interface

The SCH322x family devices provide three software controlled PCIRST# outputs and one buffered IDE Reset.

Table 17-1 describes the interface.

TABLE 17-1: BUFFERED PCI OUTPUTS INTERFACE

Name	Buffer	Power Well	Description
PCI_RESET#	PCI_I	VCC	PCI Reset Input
nIDE_RSTDRV	OD4	VCC	IDE Reset Output
nPCIRST1	O8/OD8	VCC	Buffered PCI Reset Output
nPCIRST2	O8/OD8	VCC	Buffered PCI Reset Output
nPCIRST3	O4/OD4	VCC	Buffered PCI Reset Output

17.1.1 IDE RESET OUTPUT

nIDE_RSTDRV is an open drain buffered copy of PCI_RESET#. This signal requires an external 1KΩ pull-up to VCC or 5V. This pin is an output only pin which floats when VCC=0. The pin function's default state on VTR POR is the nIDE_RST function; however the pin function can be programmed to the a GPO pin function by bit 2 in its GPIO control register.

The nIDE_RSTDRV output has a programmable forced reset. The software control of the programmable forced reset function is located in the GP4 GPIO Data register. When the GP44 bit (bit 4) is set, the nIDE_RSTDRV output follows the PCI_RESET# input; this is the default state on VTR POR. When the GP44 bit is cleared, the nIDE_RSTDRV output stays low.

See GP44 and GP4 for Runtime Register Description (Section 24.0, "Runtime Register," on page 213).

TABLE 17-2: NIDE_RSTDRV TRUTH TABLE

PCI_RESET# (Input)	nIDE_RSTDRV (Output)
0	0
1	Hi-Z

TABLE 17-3: NIDE_RSTDRV TIMING

Name	Description	MIN	TYP	MAX	Units
Tf	nIDE_RSTDRV high to low fall time. Measured form 90% to 10%			15	ns
Tpropf	nIDE_RSTDRV high to low propagation time. Measured from PCI_RESET# to nIDE_RSTDRV.			22	ns
CO	Output Capacitance			25	pF
CL	Load Capacitance			40	pF

17.1.2 NPCIRSTX OUTPUT LOGIC

The nPCIRST1, nPCIRST2, and nPCIRST3 outputs are 3.3V balance buffer push-pull buffered copies of PCI_RESET# input. Each pin function's default state on VTR POR is the nPCIRSTx function; however, the pin function can be programmed to the a GPO pin (output only) function by bit 2 in the corresponding GPIO control register (GP45, GP46, GP47).

Each nPCIRSTx output has a programmable force reset. The software control of the programmable forced reset function is located in the GP4 GPIO Data register. When the corresponding (GP45, GP46 GP47) bit in the GP4 GPIO Data register is set, the nPCIRSTx output follows the PCI_RESET# input; this is the default state on VTR POR. When the corresponding (GP45, GP46, GP47) bit in the GP4 GPIO Data register is cleared, the nPCIRSTx output stays low.

See GP4 for Runtime Register Description.

© 2016-2017 Microchip Technology Inc.

When the VTR power is applied, VCC is powered down, and the GPIO control register's contents are default, the nPCIRSTx pin output is low.

The Figure 17-1 illustrates the nPCIRSTx function. The figure is for illustration purposes only and in not intended to suggest specific implementation details.

FIGURE 17-1: NPCIRSTX LOGIC

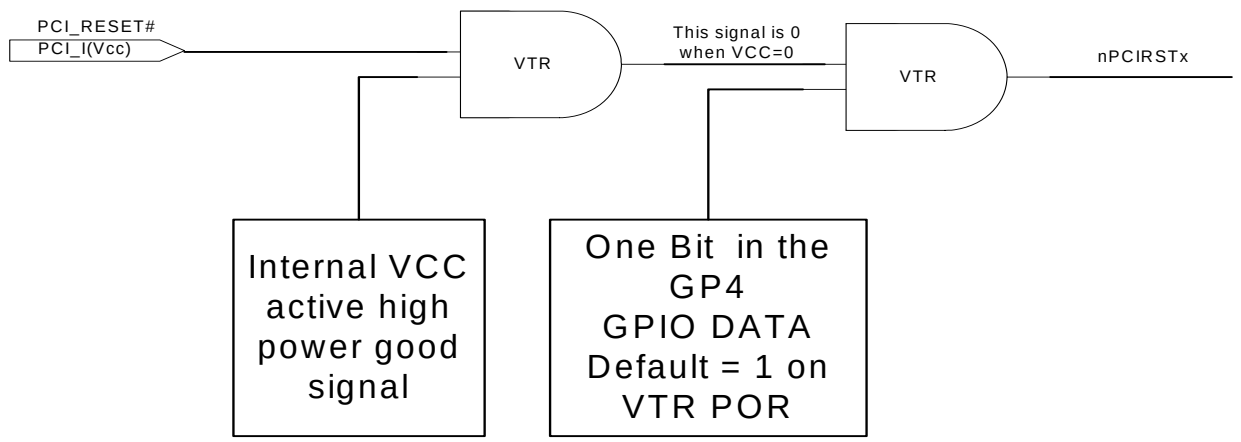

Note: This figure is for illustration purposes only and not meant to imply specific implementation dertails

18.0 POWER CONTROL FEATURES

The SCH322x family devices are able to turn on the power supply when the power button located on the PC chassis is pressed, when the power button located on the keyboard is pressed, or when recovering from a power failure. The signals used to support these features are:

- PB_IN#
- PB_OUT#
- SLP_Sx#
- PS_ON#

Table 18-1 and Figure 18-1 describe the interface and connectivity of the following Power Control Features:

1. Front Panel Reset with Input Debounce, Power Supply Gate, and Powergood Output Signal Generation
2. AC Recovery Circuit
3. Keyboard Wake on Mouse.
4. SLP_Sx# PME wakeup

TABLE 18-1: POWER CONTROL INTERFACE

Name	Direction	Description
PB_IN#	Input	Power Button Input
PB_OUT#	Output	Power Good Output
PS_ON#	Output	Power Supply On output
SLP_SX#	Input	From south bridge
PWRGD_PS	Input	Power Good Input from Power Supply
nFPRST	Input	Reset Input from Front Panel
PWRGD_OUT	Output	Power Good Output – Open Drain
nIO_PME	Output	Power Management Event Output signal allows this device to request wakeup.

© 2016-2017 Microchip Technology Inc.

FIGURE 18-1: Power Control Block Diagram

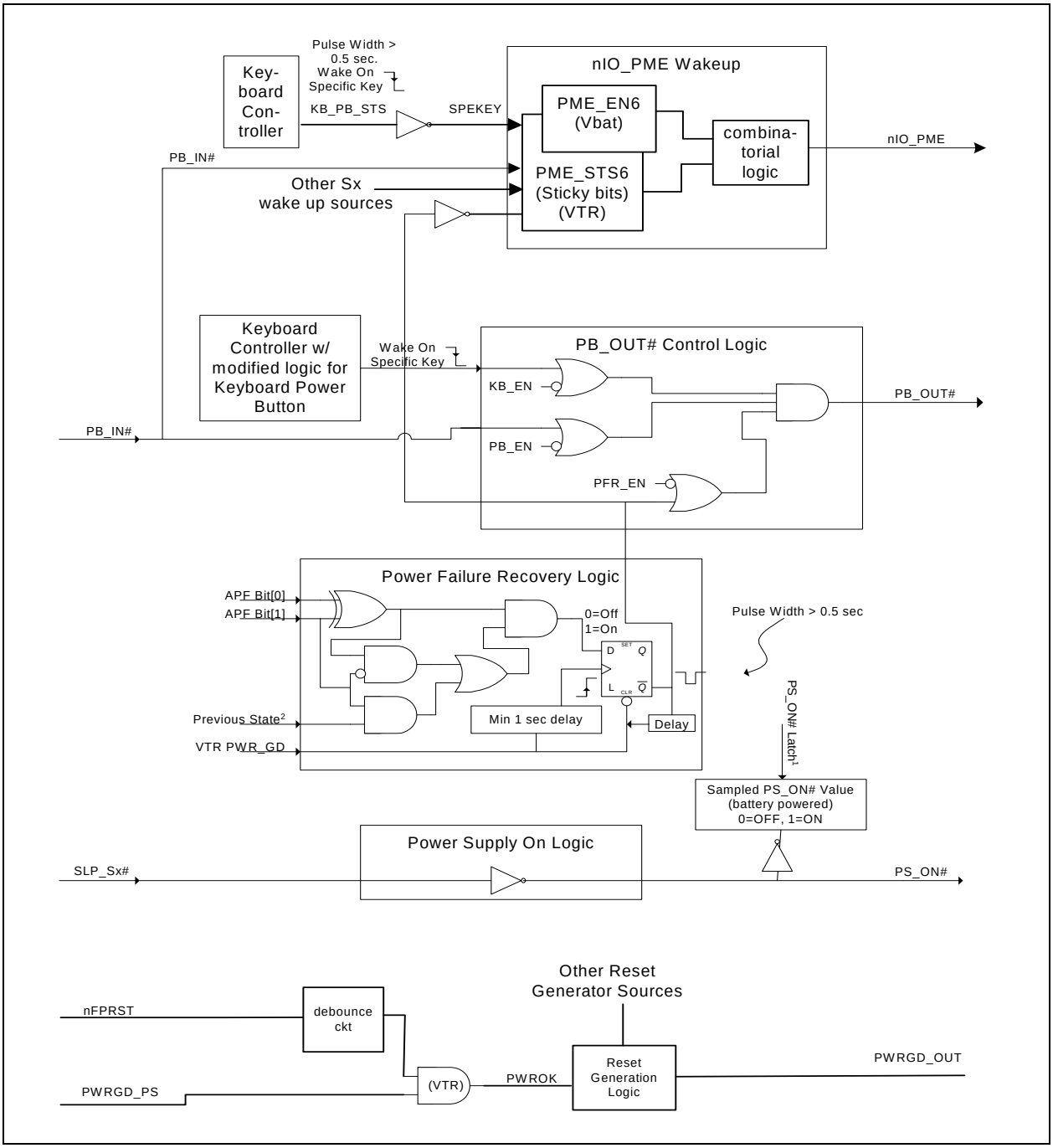

Note 1: The PS_ON# level will be latched in the Previous State bit located in the Power Recovery Register on the falling edge of VTR PWR_GD, VCC PWR_GD, or PWR_OK, which ever comes first. If mode 1 is enabled, this bit will be used to determine the Previous State.

2: The Previous state is equal to the Previous State bit located in the Power Recover Register, if configured for Mode 1. If mode 2 is enabled, the Previous state is determined by one of the bits in the 8-bit shift register, which is stored in the PS_ON register located in the Runtime Register block at 4Ah. The bit selected in mode 2 is determined by the state of the PS_ON# Previous State Select bits located in Runtime Register 53h.

18.1 nIO_PME Pin use in Power Control

The nIO_PME signal can be used to control the state of the power supply. The nIO_PME signal will be asserted when a PME event occurs and the PME logic is enabled. The following is a summary of the Power control PME events (See Figure 18-1):

1. PB_IN# input signal assertion.
2. When the Wake On Specific Key Logic detects the programmed keyboard event it will generate a wake event (KB_PB_STS).
3. Upon returning from a power failure.

Each PME wake event sets a status bit in the PME_STS6 register. If the corresponding enable bit in the PME_EN6 register is set then the nIO_PME pin will be asserted. The enable bits in the PME_EN6 register default to set and are Vbat powered. Refer to Section 13.0, "PME Support," on page 94 for description of the PME support for this PME event.

18.2 Front Panel Reset

The inputs, PWRGD_PS and nFPRST have hysteresis and are internally pulled to VTR through a 30uA resistor. The nFPRST is debounced internally.

The nFPRST input has internal debounce circuitry that is valid on both edges for at least 16ms before the output is changed. The 32.768kHz is used to meet the timing requirement. See Figure 18-2 for nFPRST debounce timing.

The actual minimum debounce time is 15.8msec

The 32.768 kHz trickle input **must** be connected to supply the clock signal for the nFPRST debounce circuitry. The SCH322x has a legacy feature which is incompatible with use of the nFPRST input signal. An internal 32kHz clock source derived from the 14MHz (VCC powered) can be selected when the external 32kHz clock is not connected.

APPLICATION NOTE: The 32.768 kHz trickle input must be connected to supply the clock signal for the nFPRST debounce circuitry.

TABLE 18-2: INTERNAL PWROK TRUTH TABLE

Inputs		Output
nFPRST	**PWRGD_PS**	**Internal PWROK**
0	0	0
0	1	0
1	0	0
1	1	1

© 2016-2017 Microchip Technology Inc.

FIGURE 18-2: NFPRST DEBOUNCE TIMING

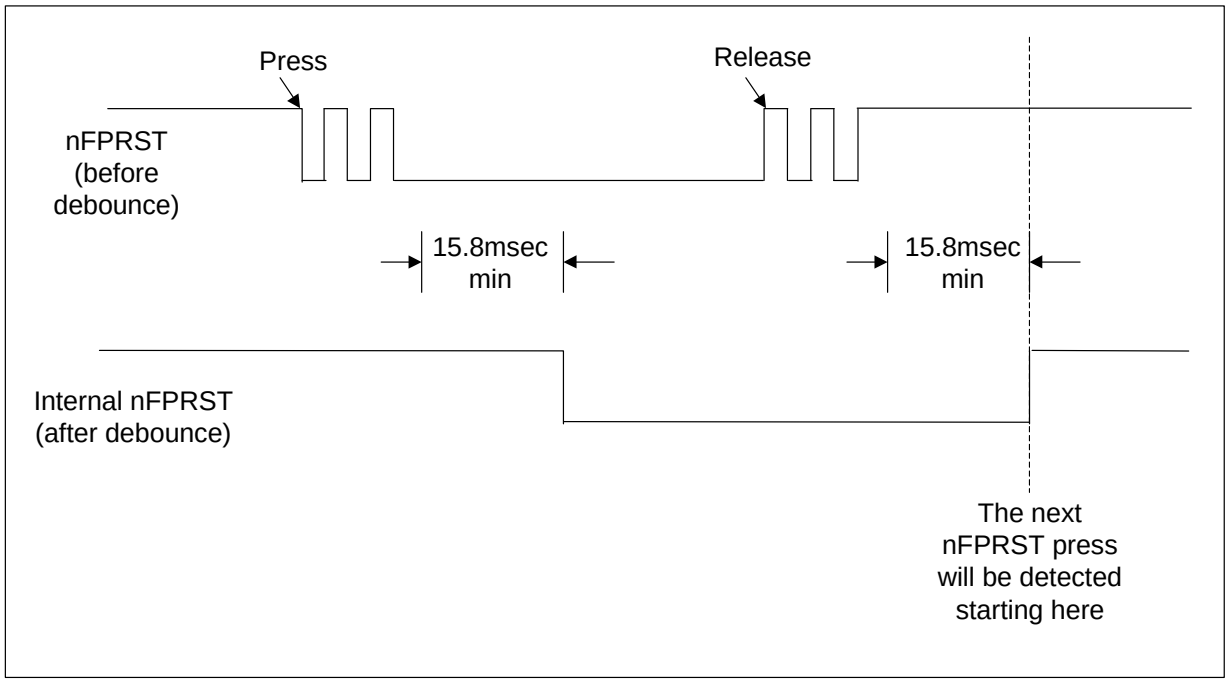

18.3 A/C Power Failure Recovery Control

The Power Failure Recovery Control logic, which is powered by VTR, is used to return a system to a pre-defined state after a power failure (VTR=0V). The Power Control Register, which is powered by Vbat, contains two bits defined as APF (After Power Failure). These bits are used to determine if the power supply should be powered on, powered off, or set to the previous power state before VTR was removed as shown in Table 18-3.

Power Failure Recovery registers that are required to retain their state through a power failure are powered by Vbat.

Two modes may be used to determine the previous state:

Mode 1: (Suggested if PWR_OK is selected& enabled), which is enabled when Bit[3] PS_ON# sampling is disabled, latches the current value of the PS_ON# pin when VCC, VTR, or PWR_OK (if enabled) transition to the inactive state, whichever comes first. This value is latched into Bit[4] Previous State Bit located in the Power Recovery Register located at offset 49h and is used to determine the state of the PS_ON# pin when VTR becomes active.

Mode 2 is enabled when Bit[3] PS_ON# sampling is enabled. To determine the previous power state, the PS_ON# pin is sampled every 0.5 seconds while VTR is greater than ~2.2Volts. This sample is inserted into a battery powered 8-bit shift register. The hardware will select a bit from the shift register depending on the value of the PS_ON# Previous State Select bits located in the Runtime Register block at offset 53h to determine the state of the PS_ON# pin when VTR becomes active. The value in the 8-bit shift register is latched into the PS_ON Register at offset 4Ah in the Runtime Register block after VTR power is returned to the system, but before the internal shift register is cleared and activated. The PS_ON Register is a battery powered register that is only reset on a Vbat POR.

Note 1: In Mode 2, when VTR falls below ~2.2Volts the current value of the PS_ON# pin will be latched into Bit [4] Previous State Bit located in the Power Recovery Register at offset 49h. This bit will not be used by hardware, but may be read by software to determine the state of the PS_ON# pin when the power failure occurred.

2: The time selected for the PS_ON# Previous State bits should be greater than or equal to the time it takes for Resume Reset to go inactive to the time VTR is less than ~2.2 Volts.

If a power failure occurs and the Power Supply should be in the ON state, the Power Failure Recovery logic will assert the PB_OUT# pin active low for a minimum pulse width of 0.5sec when VTR powers on. If the Power Supply should remain off, the Power Failure Recovery logic will have no effect on the PB_OUT# pin. The following table defines the possible states of PB_OUT# after a power failure for each configuration of the APF bits.

TABLE 18-3: DEFINITION OF APF BITS

APF[1:0]	Definition of APF Bits	AFTERG3 Bit (Located in ICH)	PB_OUT#
00 11	Power Supply OFF	1	——
01	Power Supply ON	1	
10	Power Supply set to Previous State (ON)	1	
10	Power Supply set to Previous State (OFF)	1	——

Note: It is a requirement that the AFTERG3 bit located in the ICH controller be programmed to 1 for this AC Recovery logic to be used.

18.3.1 PB_OUT# AND PS_ON#

The PB_OUT# and PS_ON# signals are used to control the state of the power supply.

The PB_OUT# signal will be asserted low if the PB_IN# is asserted and enabled, if the KB_IN# is asserted and enabled, or if recovering from a power failure and the power supply should be turned on. Refer to Figure 18-1. The following is a summary of these signals:

1. If the PB_IN# signal is enabled and asserted low, the PB_OUT# signal should be held low for as long as the PB_IN# signal is held low.
2. If the internal KB_PB_STS# signal (see Figure 14) is asserted low, the PB_OUT# signal is held low for as long as the KB_PB_STS# signal is held low.
3. If returning from a power failure and the power supply need to be turned on, a minimum of a ~0.5sec pulse is asserted on the PB_OUT# pin.

Note: This pulse width is less than 4 seconds, since a 4 second pulse width signifies a power button override event.

The PS_ON# signal is the inverse of the SLP_Sx# input signal. This signal goes directly to the Power Supply to turn the supply on or off.

The SCH#11X indirectly controls the PS_ON# signal by asserting the PB_OUT#. PB_OUT# will be interpreted by an external device (i.e., ICH controller), which will use this information to control the SLP_Sx# signal.

Note: Two modes have been added to save the state of the PS_ON# pin in the event of a power failure. This allows the system to recover from a power failure. See Section 18.3, "A/C Power Failure Recovery Control," on page 109.

© 2016-2017 Microchip Technology Inc.

18.3.2 POWER SUPPLY TIMING DIAGRAMS

The following diagrams show the relative timing for the I/O pins associated with the Power Control logic. These are conceptual diagrams to show the flow of events.

FIGURE 18-3: POWER SUPPLY DURING NORMAL OPERATION

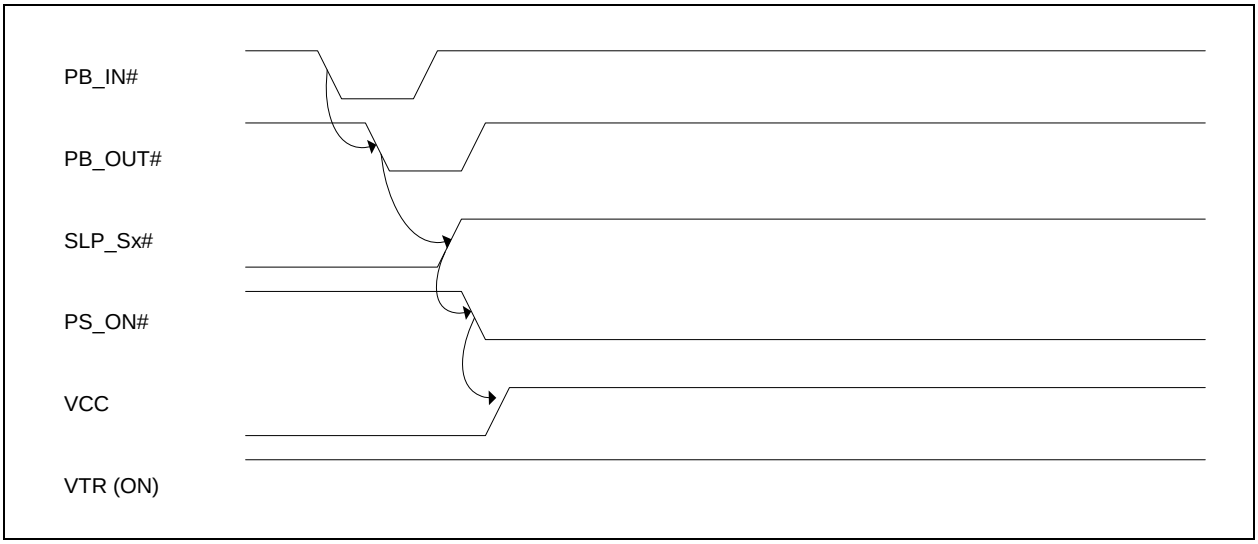

FIGURE 18-4: POWER SUPPLY AFTER POWER FAILURE (RETURN TO OFF)

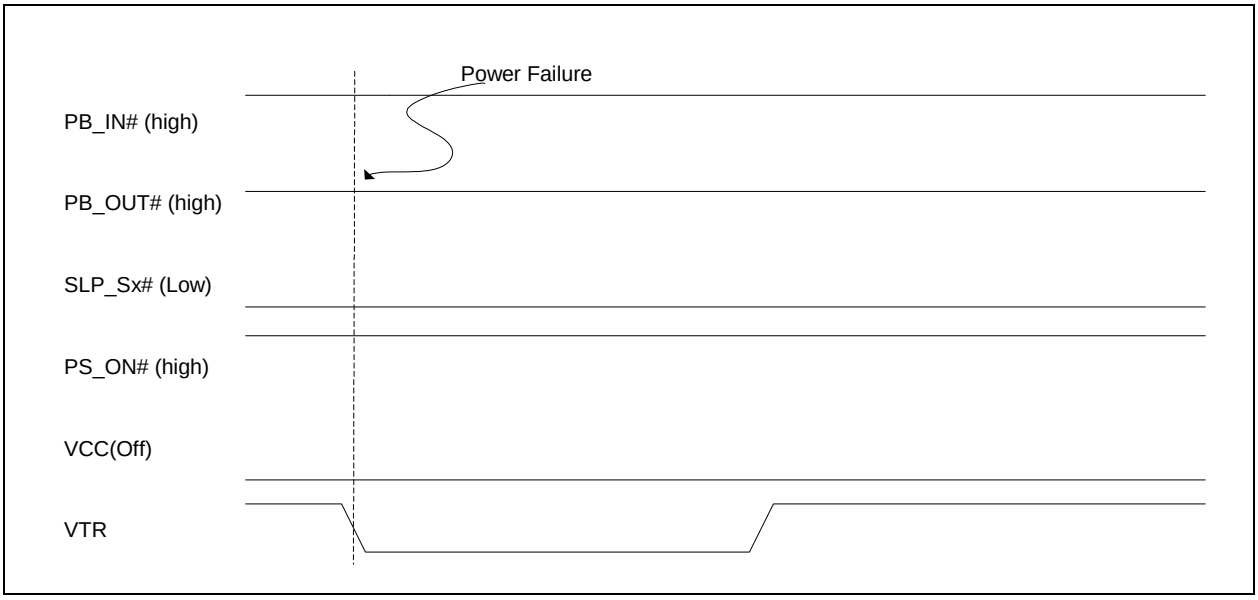

FIGURE 18-5: POWER SUPPLY AFTER POWER FAILURE (RETURN TO ON)

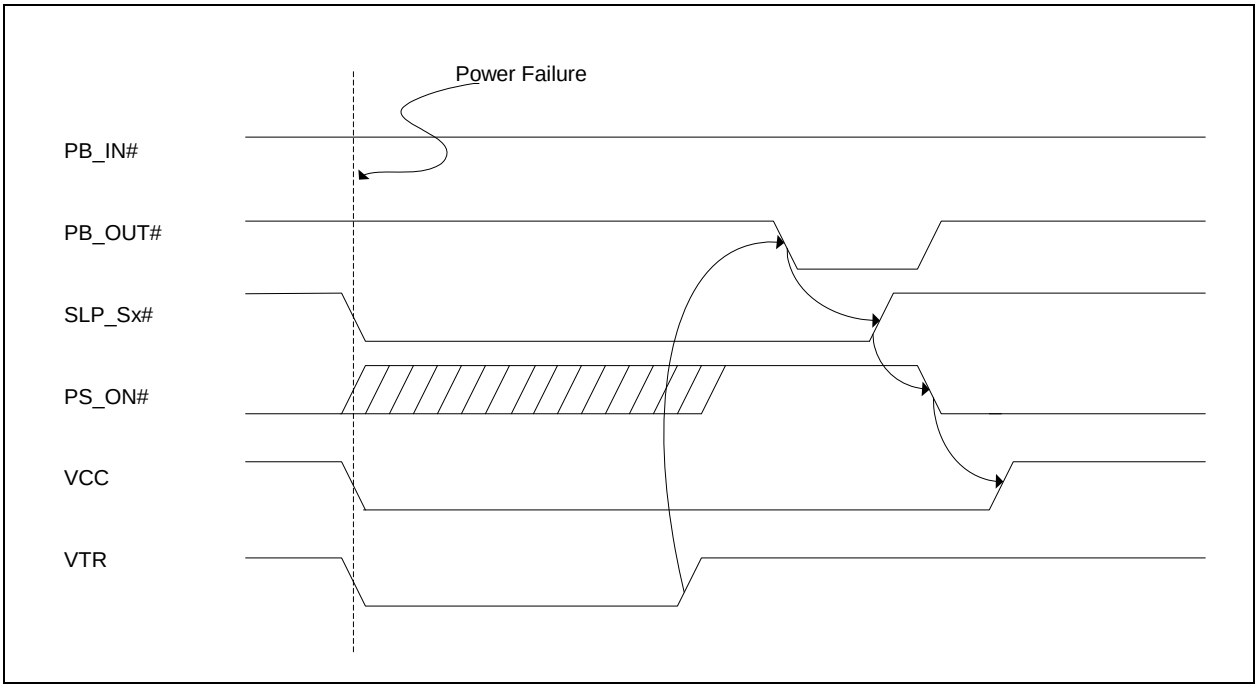

18.4 Resume Reset Signal Generation

nRSMRST signal is the reset output for the ICH resume well. This signal is used as a power on reset signal for the ICH.

The SCH322x detects when VTR voltage raises above V_{TRIP} and provides a delay before generating the rising edge of nRSMRST. See Section 27.9, "Resume Reset Signal Generation," on page 275 for a detailed description of how the nRSMRST signal is generated.

18.5 Keyboard Power Button

The SCH322x has logic to detect a keyboard make/break scan codes that may be used for wakeup (PME generation). The scan codes are programmed in the Keyboard Scan Code Registers, located in the runtime register block, from offset 0x5F to 0x63 from the base address located in the primary base I/O address in Logical Device A. These registers are powered by Vbat and are reset on a Vbat POR.

The following sections will describe the format of the keyboard data, the methods that may be used to decode the make codes, and the methods that may be used to decode the break codes.

The Wake on Specific Key Code feature is enabled for the assertion of the nIO_PME signal when in SX power state or below.

© 2016-2017 Microchip Technology Inc.

18.5.1 KEYBOARD DATA FORMAT

Data transmissions from the keyboard consist of an 11-bit serial data stream. A logic 1 is sent at an active high level. The following table shows the functions of the bits.

Bit	Function
1	Start bit (always 0)
2	Data bit 0 (least significant bit)
3	Data bit 1
4	Data bit 2
5	Data bit 3
6	Data bit 4
7	Data bit 5
8	Data bit 6
9	Data bit 7 (most significant bit)
10	Parity bit (odd parity)
11	Stop Bit (always 1)

The process to find a match for the scan code stored in the Keyboard Scan Code register meets the timing constraints as defined by the IBM Personal System/2™ Model 50 and 60 Technical Reference, dated April 1987. The timing for the keyboard clock and data signals are shown in Section 27.0, "Timing Diagrams," on page 260. (See Section 27.8, "Keyboard/Mouse Interface Timing," on page 274).

18.5.1.1 Method for Receiving Data is as Follows

The wake on specific key logic snoops the keyboard interface for a particular incoming scan code, which is used to wake the system through a PME event. These scan codes may be comprised of a single byte or multiple bytes. To determine when the first key code is being received, the wake on specific key logic begins sampling the data at the first falling edge of the keyboard clock for the start bit. The data is sampled on each falling edge of the clock. The hardware decodes the byte received and determines if it is valid (i.e., no parity error). Valid scan code bytes received are compared to the programmed scan code as determined by bits [3:2] SPEKEY Scan Code Runtime register located at offset 0x64. If the scan code(s) received matches the value(s) programmed in the Keyboard Scan Code registers then a wake on specific key status event has occurred. The wake on specific key status event is mapped to the PME and Power Button logic.

The snooping logic always checks the incoming data byte for a parity error. The hardware samples the parity bit and checks that the 8 data bits plus the parity bit always have an odd number of 1's (odd parity). If a parity error is detected the state machine used to decode the incoming scan code is reset and begins looking for the first byte in the keyboard scan code sequence.

This process is repeated until a match is found. See Section 18.5.2, "System for Decoding Scan Code Make Bytes Received from the Keyboard," on page 114 and Section 18.5.3, "System for Decoding Scan Code Break Bytes Received from the Keyboard," on page 115.

If the scan code received matches the programmed make code stored in the Keyboard Scan Code registers and no parity error is detected, then it is considered a match. When a match is found and if the stop bit is 1, a PME wake event (KB_PB_STS-See Figure 18-1) will be generated within 100usec of the falling edge of clock 10 of the last byte of the sequence. This wake event may be used to generate the assertion of the nIO_PME signal when in SX power state or below.

The state machine will reset and repeat the process until it is shut off by setting the SPEKEY_EN bit to '1'.

The SPEKEY_EN bit at bit 1 of the register at 0xF0 in Logical Device A is used to control the "wake-on-specific feature. This bit is used to turn the logic for this feature on and off. It will disable the 32kHz clock input to the logic. The logic will draw no power when disabled. The bit is defined as follows:

0= "Wake on specific key" logic is on (default)

1= "Wake on specific key" logic is off

The state machine used to snoop the incoming data from the keyboard is synchronized by the clock high and low time. If the KCLK signal remains high or low for a nominal 125usec during the transmission of a byte, a timeout event is generated causing the snooping and scan code decoding logic to be reset, such that it will look for the first byte of the make or break scan code.

18.5.1.2 Description Of SCAN 1 and SCAN 2

SCAN 1:

Many standard keyboards (PC/XT, MFII, etc.) generate scan 1 make and break codes per key press. These codes may be generated as a single byte or multi-byte sequences. If a single byte is generated, the make code, which is used to indicate when a key is pressed, is a value between 0h and 7Fh. The break code, which is used to indicate when a key is released, is equal to the make code plus 80h (i.e. 80h ≤ Break Code ≤ FFh). If a multi-byte sequence is sent it will send E0h before the make or break.

Example of Single Byte Scan 1: Make Code = 37h, Break Code=B7h

Example of Multi-byte Scan 1: Make Code = E0h 37h, Break Code = E0h B7h.

SCAN 2:

The scan 2 make and break codes used in AT and PS/2 keyboards, which are defined by the PC 8042 Keyboard Controller, use the same scan code when a key is pressed and when the key is released. A reserved release code, 0xF0, is sent by the keyboard immediately before the key specific portion of the scan code to indicate when that the key is released.

Example of Single Byte Scan 2: Make Code = 37h, Break Code=F0h 37h

Example of Multi-byte Scan 2: Make Code = E0h 37h, Break Code = E0h F0h 37h.

18.5.2 SYSTEM FOR DECODING SCAN CODE MAKE BYTES RECEIVED FROM THE KEYBOARD

Bit [3:2] of the SPEKEY Scan Code register is used to determine if the hardware is required to detect a single byte make code or a multi-byte make code. Table 18-4 summarizes how single byte and multi-byte scan codes are decoded.

FIGURE 18-6: SAMPLE SINGLE-BYTE MAKE CODE

Keyboard Scan Code - Make Byte 1
37h

FIGURE 18-7: SAMPLE MULTI-BYTE MAKE CODE

MSB	LSB
Keyboard Scan Code - Make Byte 1	Keyboard Scan Code - Make Byte 2
E0h	37h

Note: In multi-byte scan codes the most significant byte (MSB) will be received first.

© 2016-2017 Microchip Technology Inc.

TABLE 18-4: DECODING KEYBOARD SCAN CODE FOR MAKE CODE

SPEKEY Scan Code		Number of Bytes in Make Code	Description
Bit[3]	Bit[2]		
X	0	1 byte	The wake on specific key logic will compare each valid data byte received with the Keyboard Scan Code – Make Byte 1 located in the Runtime Register block at offset 5Fh. If the data byte received matches the value stored in the register, a wake on specific key status event will be generated. This wake event may be used to generate the assertion of the nIO_PME signal. **Note:** If the value programmed in Keyboard Scan Code – Make Byte 1 is 00h it is treated as a don't care and any valid scan code being compared to this byte will be a match.
X	1	2 byte	The wake on specific key logic compares each valid data byte received with the value programmed in the Keyboard Scan Code – Make Byte 1 located in the Runtime Register block at offset 5Fh. If the data byte received matches the value stored in the register, the hardware compares the next byte received with the value programmed in the Keyboard Scan Code – Make Byte 2 located in the Runtime Register block at offset 60h. If the consecutive bytes received match the programmed values, a wake on specific key status event is generated. If the values do not match, if a parity error occurs, or if a timeout occurs, the state machine is reset and the process is repeated. If a specific key status event is generated then it may be used to generate the assertion of the nIO_PME signal. **Note:** If the value programmed in Keyboard Scan Code – Make Byte 1 or Keyboard Scan Code -Make Byte2 is 00h it is treated as a don't care and any valid scan code being compared to this byte will be a match.

Note 1: X' represents a don't care.

2: By default, any time the KCLK signal is high or low for a nominal 125usec during the transmission of a byte the scan code decode cycle will be reset and the next byte received will be treated as the first byte received in the scan code byte sequence.

Once a valid make code is detected the wake on specific key logic will generate a KB_PB_STS wake event (see Figure 18-1). This wake event may be used to generate the assertion of the nIO_PME signal when in SX power state or below.

18.5.3 SYSTEM FOR DECODING SCAN CODE BREAK BYTES RECEIVED FROM THE KEYBOARD

To accommodate different keyboards, there are three options for determining when the wake on specific key logic deasserts the KB_PB_STS wake event (See in Figure 18-1) going to the sticky bits. Deassertion of the KB_PB_STS internally does not deassert the PME status bit.

The Keyboard Power Button Release bits may select these KB_PB_STS options. See Section 24.0, "Runtime Register," on page 213. A detailed description of each option is shown below.

Option 1 (00): De-assert KB_PB_STS 0.5sec after it is asserted.

This option allows the user to program any scan code into the Keyboard Scan Code – Make Byte Register(s). When a valid scan code is received that matches the value programmed in the Keyboard Scan Code Register(s), a 0.5sec pulse is generated on the KB_PB_STS wake event. Regardless of the state of the SPEKEY bits, no additional wake events will no additional wake events will occur for 0.5sec.

FIGURE 18-8: OPTION 1: KB_PB_STS WAKE EVENT FIXED PULSE WIDTH

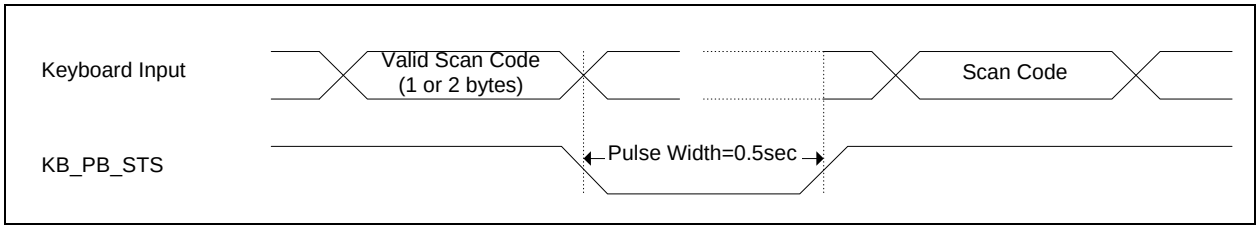

Option 2 (01): De-assert KB_PB_STS after Scan Code Not Equal Programmed Make Code

This option may be used by keyboards that emit single byte or multi-byte make codes for each key pressed. When a valid Scan Code is received that matches the value programmed in the Keyboard Scan Code – Make Byte Register(s), the KB_PB_STS wake event signal will be held asserted low until another valid Scan Code is received that is not equal to the programmed make code. Regardless of the state of the SPEKEY bits, no additional wake events will no additional wake events will occur until another valid Scan Code is received that is not equal to the programmed make code.

FIGURE 18-9: Option 2: Assert KB_PB_STS Wake Event Until Scan Code Not Programmed Make Code

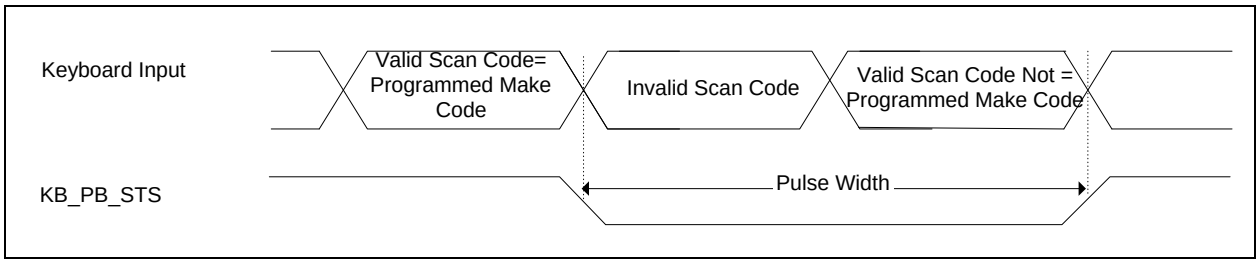

Note 1: The Valid Scan Code may be 1 or 2 bytes depending on the SPEKEY ScanCode bits in the Runtime register at offset 64h.

2: A Valid Scan Code for single byte codes means that no parity error exists. A Valid Scan Code for Multi-byte Scan Codes requires that no parity error exists and that the first Byte received matches the value programmed in the Keyboard Scan Code – Make Byte 1 located in the Runtime Register block at offset 5Fh. This value is typically E0h for Scan 1 and Scan 2 type keyboards. (Example: The ACPI power scan 2 make code is E0h, 37h) Section 18.5.1.2, "Description Of SCAN 1 and SCAN 2," on page 114.

Option 3 (10): De-assert KB_PB_STS after Scan Code Equal Break Code

This option may be used with single byte and multi-byte scan 1 and scan 2 type keyboards. The break code can be configured for a specific break code or for any valid break code.

the KB_PB_STS wake event signal will be held asserted low until a valid break code is detected. The break code can be configured for a specific break code or for any valid break code. Regardless of the state of the SPEKEY bits, no additional wake events will occur until another until a valid break code is detected.

Note: Table 18-5 defines how the scan code will be decoded for the Break Code. Once a valid break code is detected, the keyboard power button event will be de-asserted as shown in Figure 18-10.

© 2016-2017 Microchip Technology Inc.

FIGURE 18-10: OPTION 3: DE-ASSERT KB_PB_STS WHEN SCAN CODE EQUAL BREAK CODE.

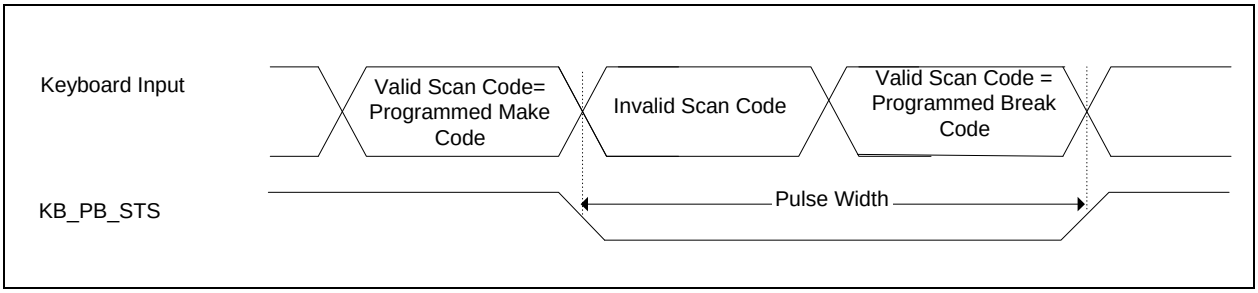

Note: The SPEKEY ScanCode bits are located in the register Keyboard PWRBTN/SPEKEY located at offset 64h.

TABLE 18-5: DECODING KEYBOARD SCAN CODE FOR BREAK CODE

SPEKEY Scan Code		Scan Code	Number of Bytes in Break Code	Description
Bit[3]	Bit[2]			
0	0	Scan 1	1 Byte	The wake on specific key logic will compare each valid data byte received with the Keyboard Scan Code – Break Byte 1 located in the Runtime Register block at offset 61h. If the data byte received matches the value stored in the register, the wake on specific key status event (KB_PB_STS) will be de-asserted. Deassertion of the KB_PB_STS internally does not deasset the PME status bit.
0	1	Scan 1	2 Bytes	The wake on specific key logic will compare each valid data byte received with the Keyboard Scan Code – Break Byte 1 located in the Runtime Register block at offset 61h. If the data byte received matches the value stored in the register, the next byte received will be compared to Keyboard Scan Code – Break Byte 2 located in the Runtime Register block at offset 62h. If this byte is a valid scan code and it matches the value programmed, the wake on specific key status (KB_PB_STS) will be de-asserted. Deassertion of the KB_PB_STS internally does not deasset the PME status bit. If the values do not match, if a parity error occurs, or if a timeout occurs, the state machine will be reset and repeat the process.
1	0	Scan 2	2 Bytes	The wake on specific key logic will compare each valid data byte received with the Keyboard Scan Code – Break Byte 1 located in the Runtime Register block at offset 61h. If the data byte received matches the value stored in the register, the next byte received will be compared to Keyboard Scan Code – Break Byte 2 located in the Runtime Register block at offset 62h. If this byte is a valid scan code and it matches the value programmed, the wake on specific key status event (KB_PB_STS) will be de-asserted. Deassertion of the KB_PB_STS internally does not deasset the PME status bit. If the values do not match, if a parity error occurs, or if a timeout occurs, the state machine will be reset and repeat the process.

TABLE 18-5: DECODING KEYBOARD SCAN CODE FOR BREAK CODE (CONTINUED)

SPEKEY Scan Code		Scan Code	Number of Bytes in Break Code	Description
Bit[3]	Bit[2]			
1	1	Scan 2	3 Bytes	The wake on specific key logic will compare each valid data byte received with the Keyboard Scan Code – Break Byte 1 located in the Runtime Register block at offset 61h. If the data byte received matches the value stored in the register, the next byte received will be compared to Keyboard Scan Code – Break Byte 2 located in the Runtime Register block at offset 62h. If the data byte received matches the value stored in the register, the next byte received will be compared to Keyboard Scan Code – Break Byte 3 located in the Runtime Register block at offset 63h. If this byte is a valid scan code and it matches the value (KB_PB_STS) will be de-asserted. Deassertion of the KB_PB_STS internally does not deasset the PME status bit. If the values do not match, if a parity error occurs, or if a timeout occurs, the state machine will be reset and repeat the process.

Note: To de-assert wake on specific key status event (KB_PB_STS) on any valid break key the register containing the LSB of the break code should be programmed to 00h. If a Keyboard Scan Code – Break Byte register is programmed to 00h then any valid scan code will be a match. The value 00h is treated as a Don't Care.

18.6 Wake on Specific Mouse Event

The device can generate SX wake events (where SX is the sleep state input) based on detection of specific Mouse button clicks on a Mouse connected to the Mouse port interface (MDAT and MCLK pins). The following specific Mouse events can be used for wake-up events:

1. Any button click (left/right/middle) or any movement
2. Any one click of left/right/middle button
3. one click of left button
4. one click of right button
5. two times click of left button
6. two times click of right button

In addition to the Idle detection logic there is Start Bit Time-out logic which detects any time MCLK stays high for more that 115-145us.

© 2016-2017 Microchip Technology Inc.

19.0 LOW BATTERY DETECTION LOGIC

The low battery detection logic monitors the battery voltage to detect if this voltage drops below 2.2V and/or 1.2V. If the device is powered by Vbat only and the battery voltage is below approximately 1.2V, a VBAT POR will occur upon a VTR POR. If the device detects the battery voltage is below approximately 2.2V while it is powered by Vbat only or VTR (VCC=0V) the LOW_BAT PME and SMI Status bits will be set upon a VCC POR. When the external diode voltage drop is taken into account, these numbers become 1.5V and 2.5V, respectively.

The LOW_BAT PME event is indicated and enabled via the appropriate PME registers.

The LOW_BAT SMI event is indicated and enabled via the SMI_STS1 and SMI_EN1 registers. See the Section 24.0, "Runtime Register," on page 213 section for a description of these registers.

The following figure illustrates external battery circuit.

FIGURE 19-1: EXTERNAL BATTERY CIRCUIT

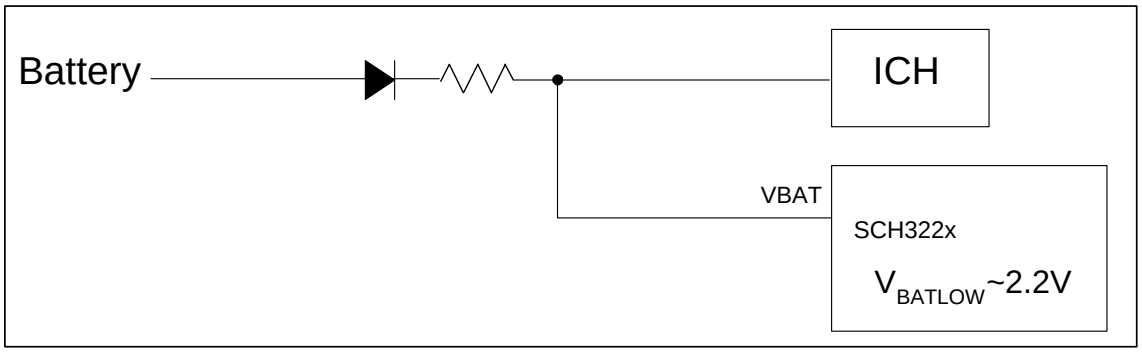

Note that the battery voltage of 2.2V nominal is at the VBAT pin of the device, not at the source.

19.1 VBAT POR

When VBAT drops below approximately 1.2V while both VTR and VCC are off, a VBAT POR will occur upon a VTR POR.

The LOW_BAT PME and SMI Status bits is set to ‘1’ upon a VBAT POR. Since the PME enable bit is not battery backed up and is cleared on VTR POR, the VBAT POR event is not a wakeup event. When VCC returns, if the PME or SMI enable bit (and other associated enable bits) are set, then the corresponding event will be generated.

19.2 Low Battery

19.2.1 UNDER BATTERY POWER

If the battery voltage drops below approximately 2.2V under battery power (VTR and VCC off) then the LOW_BAT PME and SMI Status bits will be set upon a VCC POR. This is due to the fact that the LOW_BAT event signal is only active upon a VCC POR, and therefore the low battery event is not a wakeup event. When VCC returns, if the PME or SMI enable bit (and other associated enable bits) are set, then a corresponding event will be generated.

19.2.2 UNDER VTR POWER

If the battery voltage drops below approximately 2.2V under VTR power (VCC off) then the LOW_BAT PME and SMI Status bits will be set upon a VCC POR. The corresponding enable bit (and other associated enable bits) must be set to generate a PME or an SMI.

If the PME enable bit (and other associated enable bits) were set prior to VCC going away, then the low battery event will generate a PME when VCC becomes active again. It will not generate a PME under VTR power and will not cause a wakeup event.

© 2016-2017 Microchip Technology Inc.

If the SMI enable bit (and other associated enable bits) were set prior to VCC going away, then the low battery event will generate an SMI when VCC becomes active again.

19.2.3 UNDER VCC POWER

The LOW_BAT PME and SMI bits are not set when the part is under VCC power. They are only set upon a VCC POR. See Section 19.2.2, "Under VTR Power".

© 2016-2017 Microchip Technology Inc.

20.0 BATTERY BACKED SECURITY KEY REGISTER

Located at the Secondary Base I/O Address of Logical Device A is a 32 byte CMOS memory register dedicated to security key storage. This security key register is battery powered and has the option to be read protected, write protected, and lockable. The Secondary Base I/O Address is programmable at offsets 0x62 and 0x63. See Table 20-1, "Security Key Register Summary" is a complete list of the Security Key registers.

TABLE 20-1: SECURITY KEY REGISTER SUMMARY

Register Offset (HEX)	VBAT POR	Register
00	0x00	Security Key Byte 0
01	0x00	Security Key Byte 1
02	0x00	Security Key Byte 2
03	0x00	Security Key Byte 3
04	0x00	Security Key Byte 4
05	0x00	Security Key Byte 5
06	0x00	Security Key Byte 6
07	0x00	Security Key Byte 7
08	0x00	Security Key Byte 8
09	0x00	Security Key Byte 9
0A	0x00	Security Key Byte 10
0B	0x00	Security Key Byte 11
0C	0x00	Security Key Byte 12
0D	0x00	Security Key Byte 13
0E	0x00	Security Key Byte 14
0F	0x00	Security Key Byte 15
10	0x00	Security Key Byte 16
11	0x00	Security Key Byte 17
12	0x00	Security Key Byte 18
13	0x00	Security Key Byte 19
14	0x00	Security Key Byte 20
15	0x00	Security Key Byte 21
16	0x00	Security Key Byte 22
17	0x00	Security Key Byte 23
18	0x00	Security Key Byte 24
19	0x00	Security Key Byte 25
1A	0x00	Security Key Byte 26
1B	0x00	Security Key Byte 27
1C	0x00	Security Key Byte 28
1D	0x00	Security Key Byte 29
1E	0x00	Security Key Byte 30
1F	0x00	Security Key Byte 31

Access to the Security Key register block is controlled by bits [2:1] of the Security Key Control (SKC) Register located in the Configuration Register block, Logical Device A, at offset 0xF2. The following table summarizes the function of these bits.

TABLE 20-2: DESCRIPTION OF SECURITY KEY CONTROL (SKC) REGISTER BITS[2:1]

Bit[2] (Write-Lock)	Bit[1] (Read-Lock)	Description
0	0	Security Key Bytes[31:0] are read/write registers
0	1	Security Key Bytes[31:0] are Write-Only registers
1	0	Security Key Bytes[31:0] are Read-Only registers
1	1	Security Key Bytes[31:0] are not accessible. All reads/write access is denied.

Note: When Bit[1] (Read-Lock) is ‘1’ all reads to this register block will return 00h.

- As an added layer of protection, bit [0] SKC Register Lock bit has been added to the Security Key Control Register. This lock bit is used to block write access to the Write-Lock and Read-Lock bits defined in the table above. Once this bit is set it can only be cleared by a VTR POR, VCC POR, and PCI Reset.

© 2016-2017 Microchip Technology Inc.

21.0 TEMPERATURE MONITORING AND FAN CONTROL

The Hardware Monitoring (HWM) block contains the temperature monitoring and fan control functions. The following sub-sections describe the HWM block features.

Note:	The SCH3222 device does not bring out these pins, and therefore the HWM block and this chapter are irrelevant to it.

21.1 Block Diagram

FIGURE 21-1: HWM BLOCK EMBEDDED IN SCH322X

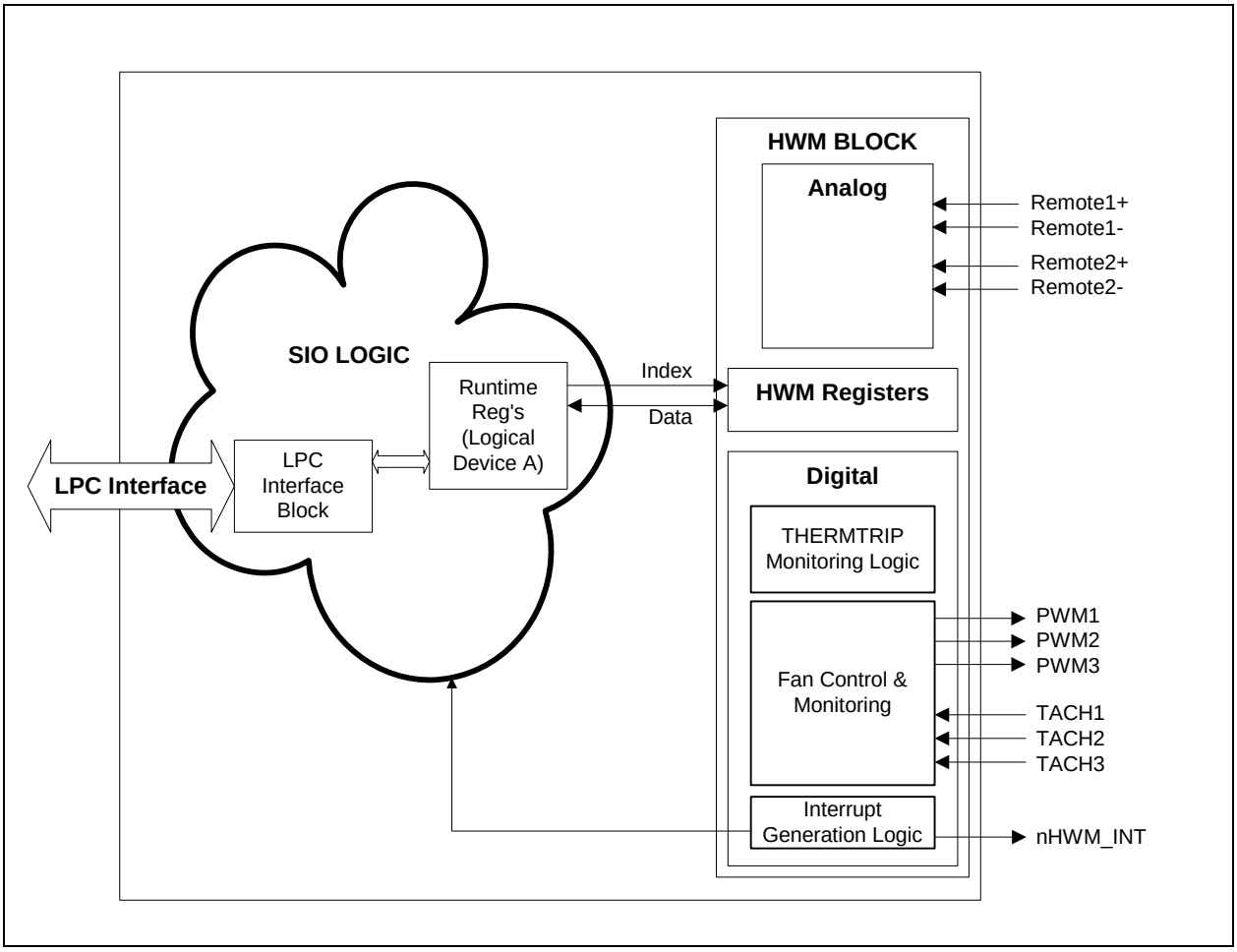

21.2 HWM Interface

The SCH322x HWM block registers are accessed through an index and data register located at offset 70h and 71h, respectively, from the address programmed in the Base I/O Address in Logical Device A (also referred to as the Runtime Register set).

FIGURE 21-2: HWM REGISTER ACCESS

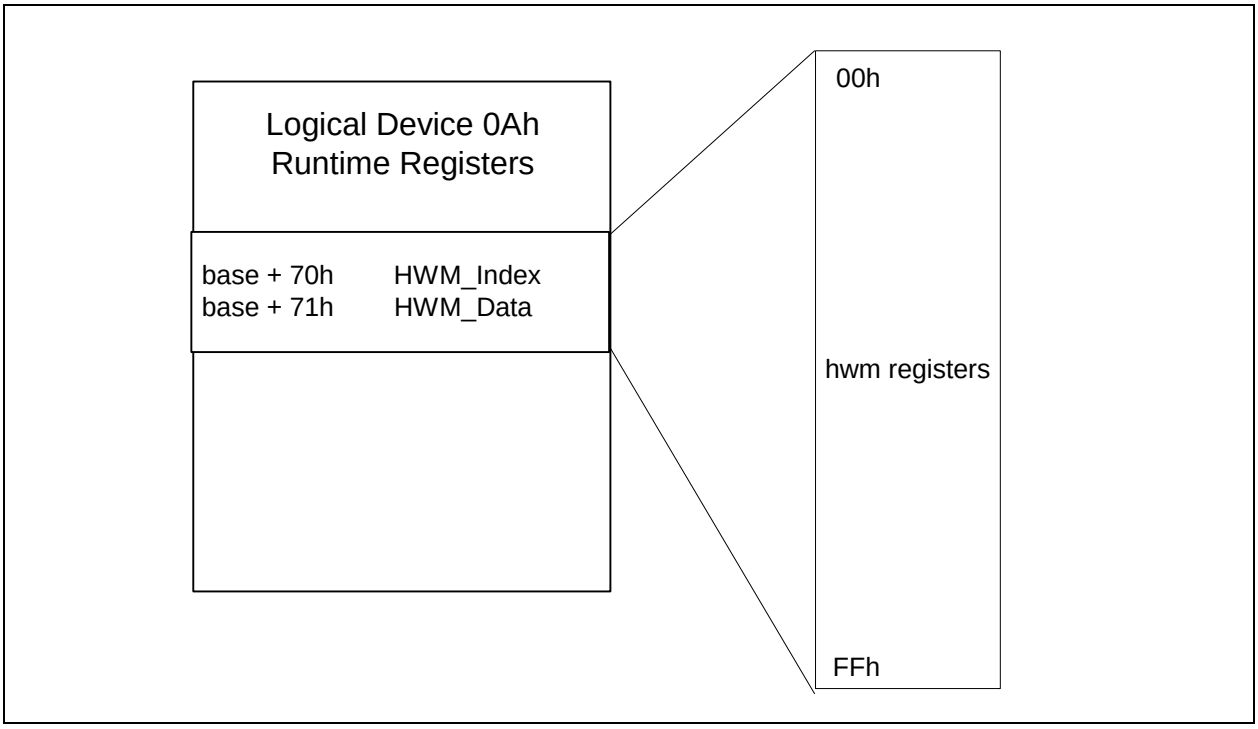

21.3 Power Supply

The HWM block is powered by standby power, HVTR, to retain the register settings during a main power (sleep) cycle. The HWM block does not operate when VCC=0 and HVTR is on. In this case, the H/W Monitoring logic will be held in reset and no monitoring or fan control will be provided. Following a VCC POR, the H/W monitoring logic will begin to operate based on programmed parameters and limits.

The fan tachometer input pins are protected against floating inputs and the PWM output pins are held low when VCC=0.

Note:	The PWM pins will be forced to “spinup” (if enabled) when PWRGD_PS goes active. See “PWM Fan Speed Control” on page 134.

21.4 Resetting the SCH322x Hardware Monitor Block

21.4.1 VTR POWER-ON RESET

All the registers in the Hardware Monitor Block, except the reading registers, reset to a default value when VTR power is applied to the block. The default state of the register is shown in the Register Summary Table. The default state of Reading Registers are not shown because these registers have indeterminate power on values.

Note:	Usually the first action after power up is to write limits into the Limit Registers.

© 2016-2017 Microchip Technology Inc.

21.4.2 VCC POWER-ON RESET

The PWRGD_PS signal is used by the hardware-monitoring block to determine when a VCC POR has occurred. The PWRGD_PS signal indicates that the VCC power supply is within operation range and the 14.318MHz clock source is valid.

Note:	Throughout the description of the hardware monitoring block VCC POR and PWRGD_PS are used interchangeably, since the PWRGD_PS is used to generate a VCC POR.

All the HWM registers will retain their value through a sleep cycle unless otherwise specified. If a VCC POR is preceded by a VTR POR the registers will be reset to their default values. The following is a list of the registers and bits that are reset to their default values following a VCC POR.

- FANTACH1 LSB register at offset 28h
- FANTACH1 MSB register at offset 29h
- FANTACH2 LSB register at offset 2Ah
- FANTACH2 MSB register at offset 2Bh
- FANTACH3 LSB register at offset 2Ch
- FANTACH3 MSB register at offset 2Dh
- Bit[1] LOCK of the Ready/Lock/Start register at offset 40h
- Zone 1 Low Temp Limit at offset 67h
- Zone 2 Low Temp Limit at offset 68h
- Zone 3 Low Temp Limit at offset 69h
- Bit[3] TRDY of the Configuration register at offset 7Fh
- Top Temperature Remote diode 1 (Zone 1) register at offset AEh
- Top Temperature Remote diode 2 (Zone 3) register at offset AFh
- Top Temperature Ambient (Zone 2) register at offset B3h

21.4.3 SOFT RESET (INITIALIZATION)

Setting bit 7 of the Configuration Register (7Fh) performs a soft reset on all the Hardware Monitoring registers except the reading registers. This bit is self-clearing.

21.5 Clocks

The hardware monitor logic operates on a 90kHz nominal clock frequency derived from the 14MHz clock input to the SIO block. The 14MHz clock source is also used to derive the high PWM frequencies.

21.6 Input Monitoring

The SCH322x device's monitoring function is started by writing a '1' to the START bit in the **Ready/Lock/Start** Register (0x40). Measured values from the temperature sensors are stored in Reading Registers. The values in the reading registers can be accessed via the LPC interface. These values are compared to the programmed limits in the Limit Registers. The out-of-limit and diode fault conditions are stored in the Interrupt Status Registers.

Note:	All limit and parameter registers must be set before the START bit is set to '1'. Once the start bit is set, these registers become read-only.

21.7 Monitoring Modes

The Hardware Monitor Block supports two Monitoring modes: Continuous Mode and Cycle Mode. These modes are selected using bit 1 of the Special Function Register (7Ch). The following subsections contain a description of these monitoring modes.

The time to complete a conversion cycle depends upon the number of inputs in the conversion sequence to be measured and the amount of averaging per input, which is selected using the AVG[2:0] bits in the Special Function register (see the Special Function Register, 7Ch).

For each mode, there are four options for the number of measurements that are averaged for each temperature reading. These options are selected using bits[7:5] of the Special Function Register (7Ch). These bits are defined as follows:

Bits [7:5] AVG[2:0]

The AVG[2:0] bits determine the amount of averaging for each of the measurements that are performed by the hardware monitor before the reading registers are updated (Table 21-1). The AVG[2:0] bits are priority encoded where the most significant bit has highest priority. For example, when the AVG2 bit is asserted, 32 averages will be performed for each measurement before the reading registers are updated regardless of the state of the AVG[1:0] bits.

TABLE 21-1: AVG[2:0] BIT DECODER

SFTR[7:5]			Measurements per Reading			Nominal Total Conversion Cycle Time (MSEC)
AVG2	AVG1	AVG0	Remote Diode 1	Remote Diode 2	Ambient	
0	0	0	128	128	8	587.4
0	0	1	16	16	1	73.4
0	1	X	16	16	16	150.8
1	X	X	32	32	32	301.5

Note: The default for the AVG[2:0] bits is ‘010’b.

21.7.1 CONTINUOUS MONITORING MODE

In the continuous monitoring mode, the sampling and conversion process is performed continuously for each temperature reading after the Start bit is set high. The time for each temperature reading is shown above for each measurement option.

The continuous monitoring function is started by doing a write to the Ready/Lock/Start Register, setting the START bit (Bit 0) high. The part then performs a “round robin” sampling of the inputs, in the order shown below (see Table 21-2). Sampling of all values occurs in a nominal 150.8 ms (default - see Table 21-2).

TABLE 21-2: ADC CONVERSION SEQUENCE

Sampling Order	Register
1	Remote Diode Temp Reading 1
2	Ambient Temperature reading
3	Remote Diode Temp Reading 2

When the continuous monitoring function is started, it cycles through each measurement in sequence, and it continuously loops through the sequence approximately once every 150.8 ms (default - see Table 21-2). Each measured value is compared to values stored in the Limit registers. When the measured value violates the programmed limit the Hardware Monitor Block will set a corresponding status bit in the Interrupt Status Registers.

If auto fan option is selected, the hardware will adjust the operation of the fans accordingly.

The results of the sampling and conversions can be found in the Reading Registers and are available at any time.

21.7.2 CYCLE MONITORING MODE

In cycle monitoring mode, the part completes all sampling and conversions, then waits approximately one second to repeat the process. It repeats the sampling and conversion process typically every 1.151 seconds (1.3 sec max - default averaging enabled). The sampling and conversion of each temperature reading is performed once every monitoring cycle. This is a power saving mode.

The cycle monitoring function is started by doing a write to the Ready/Lock/Start Register, setting the Start bit (Bit 0) high. The part then performs a “round robin” sampling of the inputs, in the order shown above.

When the cycle monitoring function is started, it cycles through each measurement in sequence, and it produces a converted temperature reading for each input. The state machine waits approximately one second before repeating this process. Each measured value is compared to values stored in the Limit registers. When the measured value violates (or is equal to) the programmed limit the Hardware Monitor Block will set a corresponding status bit in the Interrupt Status Registers.

© 2016-2017 Microchip Technology Inc.

If auto fan option is selected, the hardware will adjust the operation of the fans accordingly.

The results of each sampling and conversion can be found in the Reading Registers and are available at any time, however, they are only updated once per conversion cycle.

21.8 Interrupt Status Registers

The Hardware Monitor Block contains two primary interrupt status registers (ISRs):

- Interrupt Status Register 1 (41h)
- Interrupt Status Register 2 (42h)

There is also a secondary set of interrupt status registers:

- Interrupt Status Register 1 - Secondary (A5h)
- Interrupt Status Register 2 - Secondary (A6h)

Note 1: The status events in the primary set of interrupt status registers is mapped to a PME bit, an SMI bit, to Serial IRQ (See Interrupt Event on Serial IRQ on page 130), and to the nHWM_INT pin.

2: The nHWM_INT pin is deasserted when all of the bits in the primary ISRs (41h, 42h) are cleared. The secondary ISRs do not affect the nHWM_INT pin.

3: The primary and secondary ISRs share all of the interrupt enable bits for each of the events.

These registers are used to reflect the state of all temperature and fan violation of limit error conditions and diode fault conditions that the Hardware Monitor Block monitors.

When an error occurs during the conversion cycle, its corresponding bit is set (if enabled) in its respective interrupt status register. The bit remains set until the register bit is written to ‘1’ by software, at which time the bit will be cleared to ‘0’ if the associated error event no longer violates the limit conditions or if the diode fault condition no longer exists. Writing ‘1’ to the register bit will not cause a bit to be cleared if the source of the status bit remains active.

These registers default to 0x00 on a VCC POR, VTR POR, and Initialization. (See Resetting the SCH322x Hardware Monitor Block on page 124.)

The following section defines the Interrupt Enable Bits that correspond to the Interrupt Status registers listed above. Setting or clearing these bits affects the operation of the Interrupt Status bits.

21.8.1 INTERRUPT ENABLE BITS

Each interrupt event can be enabled into the interrupt status registers. See the figure below for the status and enable bits used to control the interrupt bits and nHWM_INT pin. Note that a status bit will not be set if the individual enable bit is not set.

The following is a list of the Interrupt Enable registers:

- Interrupt Enable Register - Fan Tachs (80h)
- Interrupt Enable Register - Temp (82h)

Note: Clearing the individual enable bits will clear the corresponding individual status bit.

Clearing the individual enable bits. There are two cases and in both cases it is not possible to change the individual interrupt enable while the start bit is set.

1. The interrupt status bit will never be set when the individual interrupt enable is cleared. Here the interrupt status bit will not get set when the start bit is set, regardless of whether the limits are violated during a measurement.
2. If an interrupt status bit had been set from a previous condition, clearing the start bit and then clearing the individual interrupt enable bit will not clear the associated interrupts status bit immediately. It will be cleared when the start bit is set, when the associated reading register is updated.

FIGURE 21-3: INTERRUPT CONTROL

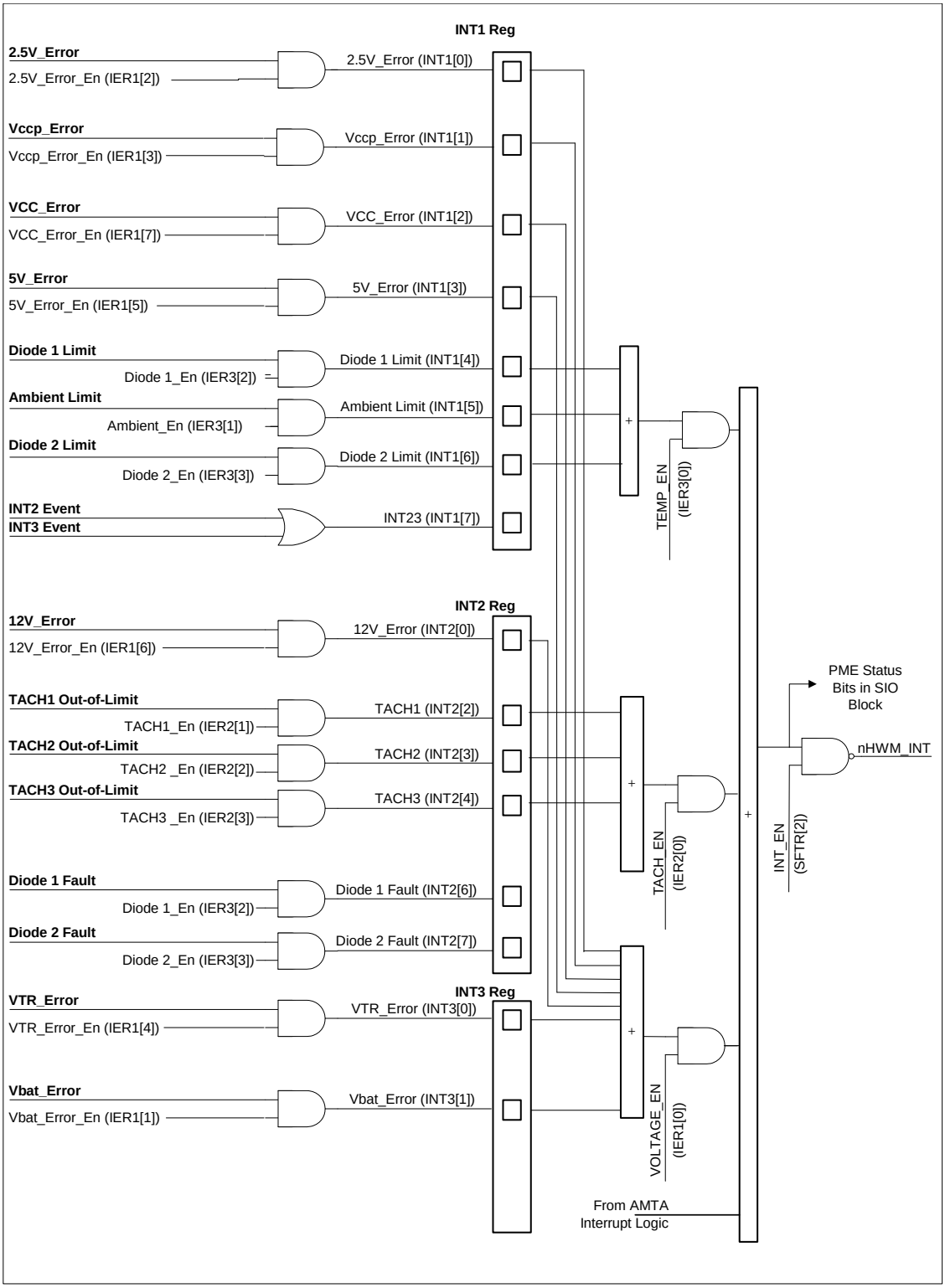

© 2016-2017 Microchip Technology Inc.

Note 1: The Primary Interrupt Status registers, and the Top Temp Status register may be used to generate a HWM Interrupt event (HWM_Event). A HWM Interrupt Event may be used to generate a PME, SMI, Serial IRQ, or nHWM_INT event. Figure 21-3, "Interrupt Control" shows the Interrupt Status registers generating an interrupt event. To see how the Top Temp Status register generates a Top_Temp_Event see FIGURE 21-14: AMTA Interrupt Mapping on page 149.

2: The diode fault bits are not mapped directly to the nHWM_INT pin. A diode fault condition forces the diode reading register to a value of 80h, which will generate a Diode Error condition. See section Diode Fault on page 129.

21.8.2 DIODE FAULT

The SCH322x Chip automatically sets the associated diode fault bit to 1 when any of the following conditions occur on the Remote Diode pins:

- The positive and negative terminal are an open circuit
- Positive terminal is connected to VCC
- Positive terminal is connected to ground
- Negative terminal is connected to VCC
- Negative terminal is connected to ground

The occurrence of a fault will cause 80h to be loaded into the associated reading register, except for the case when the negative terminal is connected to ground. A temperature reading of 80h will cause the corresponding diode error bit to be set. This will cause the nHWM_INT pin to become active if the individual, group (TEMP), and global enable (INTEN) bits are set.

Note 1: The individual remote diode enable bits and the TEMP bit are located in the Interrupt Enable Register 1 (7Eh). The INTEN bit is located in bit[2] of Special Function Register (7Ch).

2: When 80h is loaded into the Remote Diode Reading Register the PWM output(s) controlled by the zone associated with that diode input will be forced to full on. See Thermal Zones on page 132.

If the diode is disabled, the fault bit in the interrupt status register will not be set. In this case, the occurrence of a fault will cause 00h to be loaded into the associated reading register. The limits must be programmed accordingly to prevent unwanted fan speed changes based on this temperature reading. If the diode is disabled and a fault condition does not exist on the diode pins, then the associated reading register will contain a “valid” reading (e.g. A reading that is not produced by a fault condition.).

21.9 Interrupt Signal

The hardware monitoring interrupt signal, which is used to indicate out-of-limit temperature, and/or fan errors, can be generated via a dedicated pin (nHWM_INT) or through PME Status bits or SMI Status Bits located in the Runtime Register block.

To enable temperature event and/or fan events onto the nHWM_INT pin or the PME status bits or SMI status bits, the following group enable bits must be set:

- To enable out-of-limit temperature events set bit[0] of the Interrupt Enable - Temp register (82h) to ‘1’.
- To enable Fan tachometer error events set bit[0] of the Interrupt Enable - Fan Tachs register (80h) to ‘1’.

21.9.1 INTERRUPT PIN (NHWM_INT)

The nHWM_INT function is used as an interrupt output for out-of-limit temperature and/or fan errors.

- The nHWM_INT signal is on pin 114.
- To enable the interrupt pin to go active, set bit 2 of the Special Function Register (7Ch) to ‘1’.

Note: If the nHWM_INT pin is not enabled the pin will be tristate if the nHWM_INT function is selected on the pin.

See FIGURE 21-3: on page 128. The following description assumes that the interrupt enable bits for all events are set to enable the interrupt status bits to be set and no events are being masked.

If the internal or remote temperature reading violates the low or high temperature limits, nHWM_INT will be forced active low (if all the corresponding enable bits are set: individual enable bits (D1_EN, D2_EN, and/or AMB_EN), group enable bit (TEMP_EN) and the global enable bit (INTEN)). This pin will remain low while the Internal Temp Error bit or one or both of the Remote Temp Error bits in Interrupt Status 1 Register is set and the corresponding enable bit(s) are set.

© 2016-2017 Microchip Technology Inc.

The nHWM_INT pin will not become active low as a result of the remote diode fault bits becoming set. However, the occurrence of a fault will cause 80h to be loaded into the associated reading register, which will cause the corresponding diode error bit to be set. This will cause the nHWM_INT pin to become active if enabled.

The nHWM_INT pin can be enabled to indicate fan errors. Bit[0] of the Interrupt Enable 2 (Fan Tachs) register (80h) is used to enable this option. This pin will remain low while the associated fan error bit in the Interrupt Status Register 2 is set.

The nHWM_INT pin will remain low while any bit is set in any of the Interrupt Status Registers. Reading the interrupt status registers will cause the logic to attempt to clear the status bits; however, the status bits will not clear if the interrupt stimulus is still active. The interrupt enable bit (Special Function Register bit[2]) should be cleared by software before reading the interrupt status registers to insure that the nHWM_INT pin will be re-asserted while an interrupt event is active, when the INT_EN bit is written to ‘1’ again.

The nHWM_INT pin may only become active while the monitor block is operational.

21.9.2 INTERRUPT AS A PME EVENT

The hardware monitoring interrupt signal is routed to the SIO PME block. For a description of these bits see the section defining PME events. This signal is unaffected by the nHWM_INT pin enable (INT_EN) bit (See FIGURE 21-3: Interrupt Control on page 128.)

The THERM PME status bit is located in the PME_STS1 Runtime Register at offset 04h located in the SIO block.

When a temperature or fan tachometer event causes a status bit to be set, the THERM PME status bits will be set as long as the corresponding group enable bit is set.

The enable bit is located in the PME_EN1 register at offset 0Ah.

21.9.3 INTERRUPT AS AN SMI EVENT

The hardware monitoring interrupt signal is routed to the SIO SMI block. For a description of these bits see the section defining SMI events. This signal is unaffected by the nHWM_INT pin enable (INT_EN) bit (See FIGURE 21-3: Interrupt Control on page 128.)

The THERM SMI status bit is located in the SMI_STS5 Runtime Register at offset 14h located in the SIO block.

When a temperature or fan tachometer event causes a status bit to be set, the THERM SMI status bits will be set as long as the corresponding group enable bit is set.

The enable bit is located in the SMI_EN5 register at offset 1Ah.

The SMI is enabled onto the SERIRQ (IRQ2) via bit 6 of the SMI_EN2 register at 17h.

21.9.4 INTERRUPT EVENT ON SERIAL IRQ

The hardware monitoring interrupt signal is routed to the Serial IRQ logic. This signal is unaffected by the nHWM_INT pin enable (INT_EN) bit (See FIGURE 21-3: Interrupt Control on page 128.)

This operation is configured via the Interrupt Select register (0x70) in Logical Device A. This register allows the selection of any serial IRQ frame to be used for the HWM nHWM_INT interrupt (SERIRQ9 slot will be used). See Interrupt Event on Serial IRQ on page 130.

21.10 Low Power Mode

bit The hardware monitor has two modes of operation: Monitoring and Sleep. When the START bit, located in Bit[0] of the Ready/Lock/Start register (0x40), is set to zero the hardware monitor is in Sleep Mode. When this bit is set to one the hardware monitor is fully functional and monitors the analog inputs to this device.
bit Sleep mode is a low power mode in which bias currents are on and the internal oscillator is on, but the A/D converter and monitoring cycle are turned off. Serial bus communication is still possible with any register in the Hardware Monitor Block while in this low-power mode.

Note 1: In Sleep Mode the PWM Pins are held high forcing the PWM pins to 100% duty cycle (256/256).

2: The START a bit cannot be modified when the LOCK bit is set.

© 2016-2017 Microchip Technology Inc.

21.11 Temperature Measurement

Temperatures are measured internally by bandgap temperature sensor and externally using two sets of diode sensor pins (for measuring two external temperatures). See subsections below.

Note: The temperature sensing circuitry for the two remote diode sensors is calibrated for a 3904 type diode.

21.11.1 INTERNAL TEMPERATURE MEASUREMENT

Internal temperature can be measured by bandgap temperature sensor. The measurement is converted into digital format by internal ADC. This data is converted in two's complement format since both negative and positive temperature can be measured. This value is stored in Internal Temperature Reading register (26h) and compared to the Temperature Limit registers (50h – 51h). If this value violates the programmed limits in the Internal High Temperature Limit register (51h) and the Internal Low Temperature Limit register (50h) the corresponding status bit in Interrupt Status Register 1 is set.

If auto fan option is selected, the hardware will adjust the operation of the fans accordingly. See the section titled Auto Fan Control Operating Mode on page 134.

21.11.2 EXTERNAL TEMPERATURE MEASUREMENT

The Hardware Monitor Block also provides a way to measure two external temperatures using diode sensor pins (Remote x+ and Remote x-). The value is stored in the register (25h) for Remote1+ and Remote1- pins. The value is stored in the Remote Temperature Reading register (27h) for Remote2+ and Remote2- pins. If these values violate the programmed limits in the associated limit registers, then the corresponding Remote Diode 1 (D1) or Remote Diode 2 (D2) status bits will be set in the Interrupt Status Register 1.

If auto fan option is selected, the hardware will adjust the operation of the fans accordingly. See Auto Fan Control Operating Mode on page 134.

There are Remote Diode (1 or 2) Fault status bits in Interrupt Status Register 2 (42h), which, when one, indicate a short or open-circuit on remote thermal diode inputs (Remote x+ and Remote x-). Before a remote diode conversion is updated, the status of the remote diode is checked. In the case of a short or open-circuit on the remote thermal diode inputs, the value in the corresponding reading register will be forced to 80h. Note that this will cause the associated remote diode limit exceeded status bit to be set (i.e. Remote Diode x Limit Error bits (D1 and D2) are located in the Interrupt Status 1 Register at register address 41h).

The temperature change is computed by measuring the change in Vbe at two different operating points of the diode to which the Remote x+ and Remote x- pins are connected. But accuracy of the measurement also depends on non-ideality factor of the process the diode is manufactured on.

21.11.3 TEMPERATURE DATA FORMAT

Temperature data can be read from the three temperature registers:

- Internal Temp Reading register (26h)
- Remote Diode 1 Temp Reading register (25h)
- Remote Diode 2 Temp Reading register (27h)

The following table shows several examples of the format of the temperature digital data, represented by an 8-bit, two's complement word with an LSB equal to 1.0 ^{0}C.

TABLE 21-3: TEMPERATURE DATA FORMAT

Temperature	Reading (DEC)	Reading (HEX)	Digital Output
-127^{0}C	-127	81h	1000 0001
⋮	⋮	⋮	⋮
-50 ^{0}C	-50	CEh	1100 1110
⋮	⋮	⋮	⋮
-25 ^{0}C	-25	E7h	1110 0111
⋮	⋮	⋮	⋮
-1 ^{0}C	-1	FFh	1111 1111

TABLE 21-3: TEMPERATURE DATA FORMAT (CONTINUED)

Temperature	Reading (DEC)	Reading (HEX)	Digital Output
0 ^{0}C	0	00h	0000 0000
+1 ^{0}C	1	01h	0000 0001
⋮	⋮	⋮	⋮
+25 ^{0}C	25	19h	0001 1001
⋮	⋮	⋮	⋮
+50^{0}C	50	32h	0011 0010
⋮	⋮	⋮	⋮
+127^{0}C	127	7Fh	0111 1111
SENSOR ERROR	128	80h	1000 0000

21.12 Thermal Zones

Each temperature measurement input is assigned to a Thermal Zone to control the PWM outputs in Auto Fan Control mode. These zone assignments are as follows:

- Zone 1 = Remote Diode 1 (Processor)
- Zone 2 = Ambient Temperature Sensor
- Zone 3 = Remote Diode 2

The auto fan control logic uses the zone temperature reading to control the duty cycle of the PWM outputs.

The following sections describe the various fan control and monitoring modes in the part.

21.13 Fan Control

This Fan Control device is capable of driving multiple DC fans via three PWM outputs and monitoring up to three fans equipped with tachometer outputs in either Manual Fan Control mode or in Auto Fan Control mode. The three fan control outputs (PWMx pins) are controlled by a Pulse Width Modulation (PWM) scheme. The three pins dedicated to monitoring the operation of each fan are the FANTACH[1:3] pins. Fans equipped with Fan Tachometer outputs may be connected to these pins to monitor the speed of the fan.

21.13.1 LIMIT AND CONFIGURATION REGISTERS

At power up, all the registers are reset to their default values and PWM[1:3] are set to “Fan always on Full” mode. Before initiating the monitoring cycle for either manual or auto mode, the values in the limit and configuration registers should be set.

The limit and configuration registers are:

- Registers 54h – 5Bh: TACHx Minimum
- Registers 5Fh – 61h: Zone x Range/FANx Frequency
- Registers 5Ch – 5Eh: PWMx Configuration
- Registers 62h – 63h: PWM 1 Ramp Rate Control
- Registers 64h – 66h: PWMx Minimum Duty Cycle
- Registers 67h – 69h: Zone x Low Temp LIMIT
- Registers 6Ah – 6Ch: Zone x Temp Absolute Limit – all fans in Auto Mode are set to full
- Register 81h: TACH_PWM Association
- Registers 90h – 92h: Tachx Option Registers
- Registers 94h – 96h: PWMx Option Registers

Note 1: The START bit in Register 40h Ready/Lock/Start Register must be set to ‘1’ to start temperature monitoring functions.

2: Setting the PWM Configuration register to Auto Mode will not take effect until after the START bit is set

© 2016-2017 Microchip Technology Inc.

21.13.2 DEVICE SET-UP

BIOS will follow the steps listed below to configure the fan registers on this device. The registers corresponding to each function are listed. All steps may not be necessary if default values are acceptable. Regardless of all changes made by the BIOS to the limit and parameter registers during configuration, the SCH322x will continue to operate based on default values until the Start bit, in the Ready/Lock/Start register, is set. Once the Start bit is set, the SCH322x will operate according to the values that were set by BIOS in the limit and parameter registers.

Following a VTR Power-on-Reset (loss of a/c power) the following steps must be taken:

1. Set limits and parameters (not necessarily in this order)
   a) [5F-61h] Set PWM frequencies and Auto Fan Control Range.
   b) [62-63h] Set Ramp Rate Control.
   c) [5C-5Eh] Set the fan spin-up delays.
   d) [5C-5Eh] Match each PWM output with a corresponding thermal zone.
   e) [67-69h] Set the zone temperature low limits.
   f) [6A-6Ch] Set the zone temperature absolute limits.
   g) [64-66h] Set the PWM minimum duty cycle.
   h) [81h] Associate a Tachometer input to a PWM output Register
   i) [90-92h] Select the TACH Mode of operation (Mode 1 or Mode 2)
   j) [90-92h] Set the number of edges per tach reading
   k) [90-92h] Set the ignore first 3 edges of tach input bit
   l) [90-92h] Set the SLOW bit if tach reading should indicated slow fan event as FFFEh and stalled fan event as FFFFh.
   m) [94-96h] Set the TACH Reading Update rate
   n) [94-96h] Set the tach reading guard time (Mode 2 Only)
   o) [94-96h] Set the TACH reading logic for Opportunistic Mode (Mode 2 Only)
   p) [94-96h] Set the SZEN bit, which determines if the PWM output will ramp to Off or jump to Off.
   q) [ABh] Set the Tach 1-3 Mode
   r) [AEh, AFh, B3h] Set the Top Temperature Remote 1, 2, Ambient
   s) [B4h - B6h] Min Temp Adjust Temp Remote 1-2, Min Temp Adjust Temp and Delay Amb, and Min Temp Adjust Delay 1-2
   t) [B7h] Tmin Adjust Enable
   u) [C4h, C5h, C9h] THERMTRIP Temp Limit Remote 1, 2, Ambient
   v) [CEh] THERMTRIP Output Enable
   w) [D1h, D6h, DBh] PWM1, 2, 3 Max Duty Cycle
2. [40h] Set bit 0 (Start) to start monitoring
3. [40h] Set bit 1 (Lock) to lock the limit and parameter registers (optional).

Following a VCC Power-On-Reset (exiting sleep mode) the following steps must be taken. These steps are required for most systems in order to prevent improper fan start-up due to the reset of the Top Temperature and zone low limit registers to their default values on active PWRGD_PS.

1. Set the ramp rate to the min value [registers 62h and 63h].
2. Clear the start bit (bit 0 of register 40h) to stop monitoring
3. Set the Top Temperature Remote 1, 2, Ambient registers [AEh, AFh, B3h] to their initial values
4. Set the zone temperature low limit registers [67-69h] to their initial values
5. Set the start bit (bit 0 of register 40h) to start monitoring
6. Set the lock bit (bit 1of register 40h) to lock the limit and parameter registers (optional)

Note: If not locked, the ramp rate can be set to a new value at a later time if desired [registers 62h and 63h].

21.13.3 PWM FAN SPEED CONTROL

The following description applies to PWM1, PWM2, and PWM3.

Note:	The PWM output pins are held low when VCC=0. The PWM pins will be forced to “spinup” when PWRGD_PS goes active. See “Spin Up” on page 137.

The PWM pin reflects a duty cycle that is determined based on 256 PWM duty cycle intervals. The minimum duty cycle is “off”, when the pin is low, or “full on” when the pin is high for 255 intervals and low for 1 interval. The INVERT bit (bit 4 of the PWMx Configuration registers at 80h-82h) can be used to invert the PWM output, however, the default operation (following a VCC POR) of the part is based on the PWM pin active high to turn the fans “on”. When the INVERT bit is set, as long as power is not removed from the part, the inversion of the pin will apply thereafter.

When describing the operation of the PWMs, the terms “Full on” and “100% duty cycle” means that the PWM output will be high for 255 clocks and low for 1 clock (INVERT bit = 0). The exception to this is during fan spin-up when the PWM pin will be forced high for the duration of the spin-up time.

The SCH322x can control each of the PWM outputs in one of two modes:

- Manual Fan Control Operating Mode: software controls the speed of the fans by directly programming the PWM duty cycle.
- Auto Fan Control Mode: the device automatically adjusts the duty cycle of the PWM outputs based on temperature, according to programmed parameters.

These modes are described in sections that follow.

21.13.3.1 Manual Fan Control Operating Mode (Test Mode)

When operating in Manual Fan Control Operating Mode, software controls the speed of the fans by directly programming the PWM duty cycle. The operation of the fans can be monitored based on reading the temperature and tachometer reading registers and/or by polling the interrupt status registers. The SCH322x offers the option of generating an interrupt indicated by the nHWM_INT signal.

To control the PWM outputs in manual mode:

- To set the mode to operate in manual mode, write ‘111’ to bits[7:5] Zone/Mode, located in Registers 5Ch-5Eh: PWMx Configuration.
- The speed of the fan is controlled by the duty cycle set for that PWM output. The duty cycle must be programmed in Registers 30h-32h: Current PWM Duty

To monitor the fans:

Fans equipped with Tachometer outputs can be monitored via the FANTACHx input pins. See Section 21.14.2, "Fan Speed Monitoring," on page 150.

If an out-of-limit condition occurs, the corresponding status bit will be set in the Interrupt Status registers. Setting this status bit will generate an interrupt signal on the nHWM_INT pin (if enabled). Software must handle the interrupt condition and modify the operation of the device accordingly. Software can evaluate the operation of the Fan Control device through the Temperature and Fan Tachometer Reading registers.

When in manual mode, the current PWM duty cycle registers can be written to adjust the speed of the fans, when the start bit is set. These registers are not writable when the lock bit is set.

Note:	The PWMx Current Duty Cycle register is implemented as two separate registers: a read-only and a write-only. When a value is written to this register in manual mode there will be a delay before the programmed value can be read back by software. The hardware updates the read-only PWMx Current Duty Cycle register on the beginning of a PWM cycle. If Ramp Rate Control is disabled, the delay to read back the programmed value will be from 0 seconds to 1/(PWM frequency) seconds. Typically, the delay will be 1/(2*PWM frequency) seconds.

21.13.3.2 Auto Fan Control Operating Mode

The SCH322x implements automatic fan control. In Auto Fan Mode, this device automatically adjusts the PWM duty cycle of the PWM outputs, according to the flow chart on the following page (see FIGURE 21-4: Automatic Fan Control Flow Diagram on page 135).

© 2016-2017 Microchip Technology Inc.

PWM outputs are assigned to a thermal zone based on the PWMx Configuration registers (see Thermal Zones on page 132). It is possible to have more than one PWM output assigned to a thermal zone. For example, PWM outputs 2 and 3, connected to two chassis fans, may both be controlled by thermal zone 2. At any time, if the temperature of a zone exceeds its absolute limit, all PWM outputs go to 100% duty cycle to provide maximum cooling to the system (except those fans that are disabled or in manual mode).

It is possible to have a single fan controlled by multiple zones, turning on when either zone requires cooling based on its individual settings.

If the start bit is one, the Auto Fan Control block will evaluate the temperature in the zones configured for each Fan in a round robin method. The Auto Fan Control block completely evaluates the zones for all three fans in a maximum of 0.25sec.

FIGURE 21-4: AUTOMATIC FAN CONTROL FLOW DIAGRAM

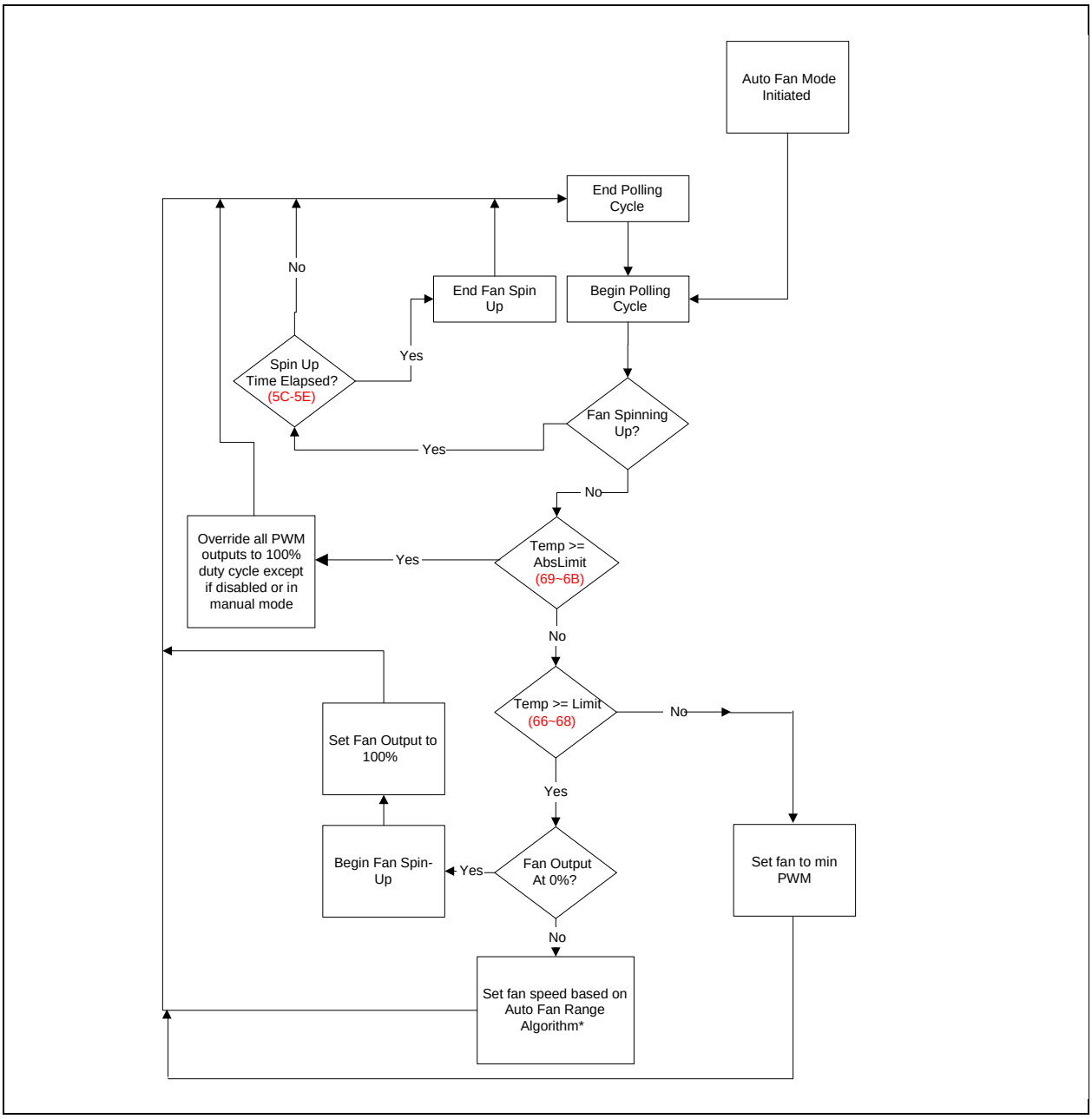

When in Auto Fan Control Operating Mode the hardware controls the fans directly based on monitoring of temperature and speed.

To control the fans:

- Set the minimum temperature that will turn the fans on. This value is programmed in Registers 67h-69h: Zone x Low Temp Limit (Auto Fan Mode Only).

The speed of the fan is controlled by the duty cycle set for that device. The duty cycle for the minimum fan speed must be programmed in Registers 64h-66h: PWMx Minimum Duty Cycle. This value corresponds to the speed of the fan when the temperature reading is equal to the minimum temperature LIMIT setting. As the actual temperature increases and is above the Zone LIMIT temperature and below the Absolute Temperature Limit, the PWM will be determined by a linear function based on the Auto Fan Speed Range bits in Registers 5Fh-61h.

The maximum speed of the fan for the linear autofan function is programmed in the PWMx Max registers (0D1h, 0D6h, 0DBh). When the temperature reaches the top of the linear fan function for the sensor (Zone x Low Temp Limit plus Temperature Range) the fan will be at the PWM maximum duty cycle.

Set the absolute temperature for each zone in Registers 6Ah-6Ch: Zone x Temp Absolute Limit (Auto Fan Mode only). If the actual temperature is equal to or exceeds the absolute temperature in one or more of the associated zones, all Fans operating in auto mode will be set to Full on, regardless of which zone they are operating in (except those that are disabled or configured for Manual Mode). Note that fans can be disabled via the PWMx Configuration registers and the absolute temperature safety feature can be disabled by writing 80h into the Zone x Temp Absolute Limit registers.

To set the mode to operate in auto mode, set Bits[7:5] Zone/Mode, located in Registers 5Ch-5Eh: PWM Configuration Bits[7:5]='000' for PWM on Zone 1; Bits[7:5]='001' for PWM on Zone 2; Bits[7:5]='010' for PWM on Zone 3. If the "Hottest" option is chosen (101 or 110), then the PWM output is controlled by the zone that results in the highest PWM duty cycle value.

Note 1: Software can be alerted of an out-of-limit condition by the nHWM_INT pin if an event status bit is set and the event is enabled and the interrupt function is enabled onto the nHWM_INT pin.

2: Software can monitor the operation of the Fans through the Fan Tachometer Reading registers and by the PWM x Current PWM duty registers. It can also monitor current temperature readings through the Temperature Limit Registers if hardware monitoring is enabled.

3: Fan control in auto mode is implemented without any input from external processor .

In auto "Zone" mode, the speed is adjusted automatically as shown in the figure below. Fans are assigned to a zone(s). It is possible to have more than one fan assigned to a thermal zone or to have multiple zones assigned to one fan.

FIGURE 21-5: on page 137 shows the control for the auto fan algorithm. The part allows a minimum temperature to be set, below which the fan will run at minimum speed. The minimum speed is programmed in the PWMx Minimum Duty cycle registers (64h-66h) and may be zero. A temperature range is specified over which the part will automatically adjust the fan speed. The fan will go to a duty cycle computed by the auto fan algorithm. As the temperature rises, the duty cycle will increase until the fan is running at full-speed when the temperature reaches the minimum plus the range value. The effect of this is a temperature feedback loop, which will cause the temperature to reach equilibrium between the minimum temperature and the minimum temperature plus the range. Provided that the fan has adequate cooling capacity for all environmental and power dissipation conditions, this system will maintain the temperature within acceptable limits, while allowing the fan to run slower (and quieter) when less cooling is required.

© 2016-2017 Microchip Technology Inc.

FIGURE 21-5: AUTOMATIC FAN CONTROL

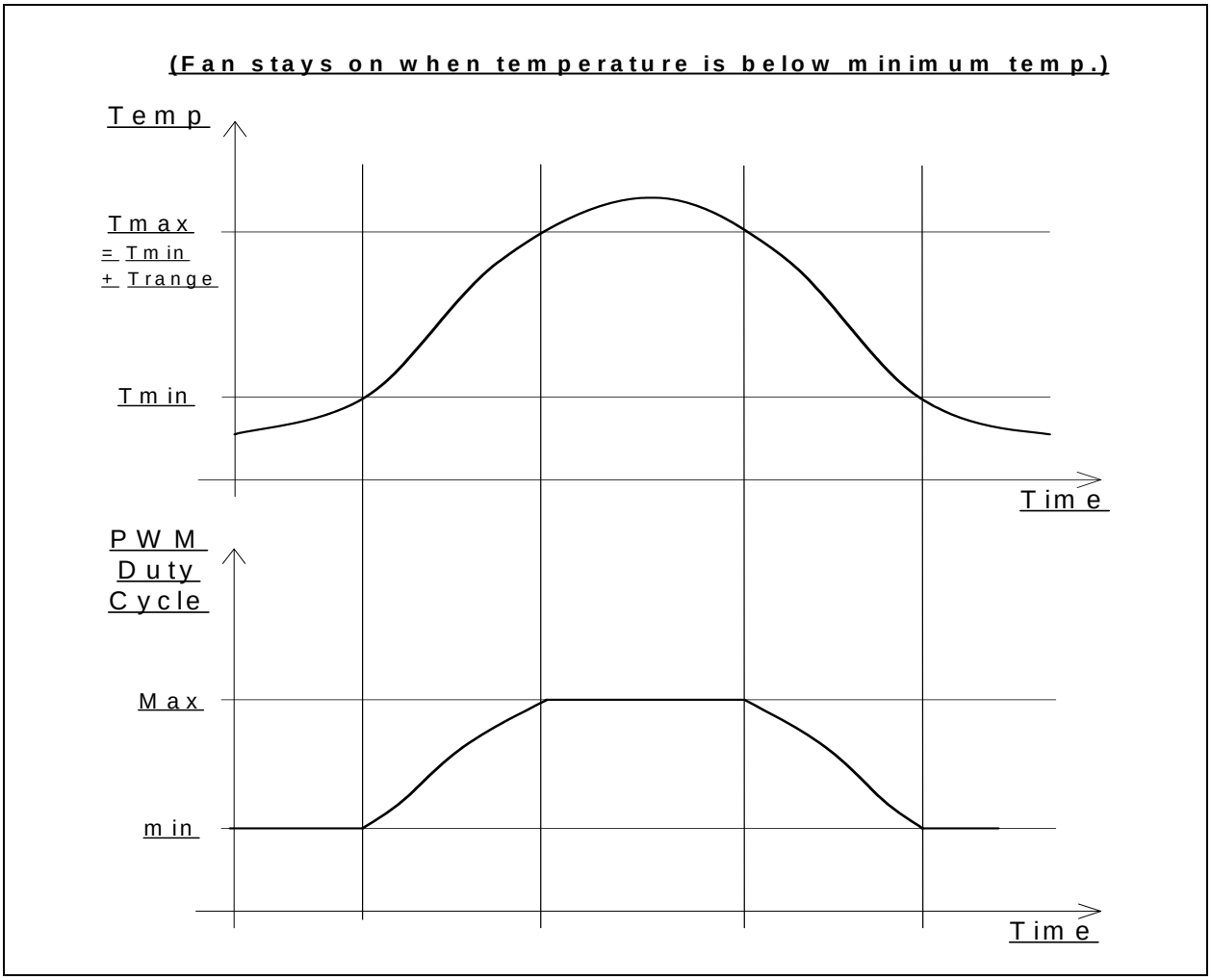

21.13.3.3 Spin Up

When a fan is being started from a stationary state (PWM duty cycle =00h), the part will cause the fan to “spin up” by going to 100% duty cycle for a programmable amount of time to overcome the inertia of the fan (i.e., to get the fan turning). Following this spin up time, the fan will go to the duty cycle computed by the auto fan algorithm.

During spin-up, the PWM duty cycle is reported as 0%.

To limit the spin-up time and thereby reduce fan noise, the part uses feedback from the tachometers to determine when each fan has started spinning properly. The following tachometer feedback is included into the auto fan algorithm during spin-up.

Auto Fan operation during Spin Up:

The PWM goes to 100% duty cycle until the tachometer reading register is below the minimum limit (see Figure 21-6), or the spin-up time expires, whichever comes first. This causes spin-up to continue until the tachometer enters the valid count range, unless the spin up time expires. If the spin up expires before the tachometer enters the valid range, an interrupt status bit will be set once spin-up expires. Note that more than one tachometer may be associated with a PWM, in which case all tachometers associated with a PWM must be in the valid range for spin-up to end.

FIGURE 21-6: SPIN UP REDUCTION ENABLED

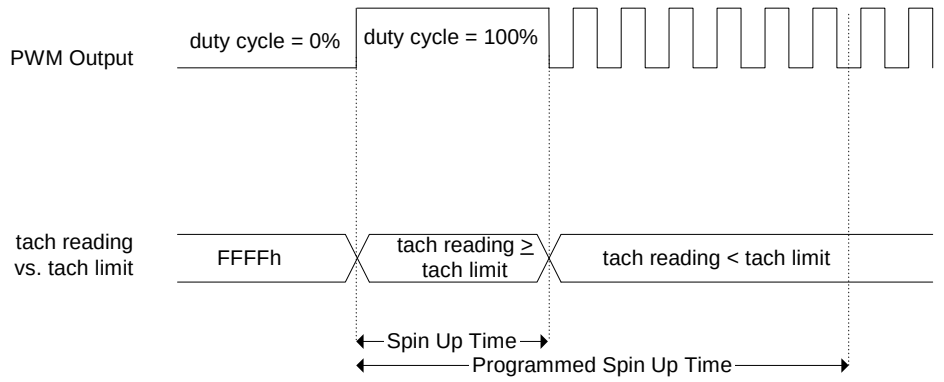

Note: When Spin Up Reduction is enabled (SUREN), the Spin Up time will be less than or equal to the programmed time for Spin Up. Once the tachometer(s) associated with a PWM output are operating within the programmed limits or the Spin Up time expires, whichever comes first, the PWM output is reduced to the calculated duty cycle.

This feature defaults to enabled; it can be disabled by clearing bit 4 of the Configuration register (7Fh). If disabled, the all fans go to 100% duty cycle for the duration of their associated spin up time. Note that the Tachometer x minimum registers must be programmed to a value less than FFFFh in order for the spin up reduction to work properly.

Note 1: The tachometer reading register always gives the actual reading of the tachometer input.

2: No interrupt bits are set during spin-up.

21.13.3.4 Hottest Option

If the “Hottest” option is chosen (101 or 110), then the fan is controlled by the limits and parameters associated with the zone that requires the highest PWM duty cycle value, as calculated by the auto fan algorithm.

21.13.3.5 Ramp Rate Control Logic

The Ramp Rate Control Logic, if enabled, limits the amount of change in the PWM duty cycle over a specified period of time. This period of time is programmable in the Ramp Rate Control registers located at offsets 62h and 63h.

21.13.3.5.1 Ramp Rate Control Disabled: (default)

The Auto Fan Control logic determines the duty cycle for a particular temperature. If PWM Ramp Rate Control is disabled, the PWM output will be set to this calculated duty cycle.

21.13.3.5.2 Ramp Rate Control Enabled:

If PWM Ramp Rate Control is enabled, the PWM duty cycle will Ramp up or down to the new duty cycle computed by the auto fan control logic at the programmed Ramp Rate. The PWM Ramp Rate Control logic compares the current duty cycle computed by the auto fan logic with the previous ramp rate duty cycle. If the current duty cycle is greater than the previous ramp rate duty cycle the ramp rate duty cycle is incremented by ‘1’ at the programmed ramp rate until it is greater than or equal to the current calculated duty cycle. If the current duty cycle is less than the previous ramp rate duty cycle, the ramp rate duty cycle is decremented by ‘1’ until it is less than or equal to the current duty cycle. If the current PWM duty cycle is equal to the calculated duty cycle the PWM output will remain unchanged.

Internally, the PWM Ramp Rate Control Logic will increment/decrement the internal PWM Duty cycle by ‘1’ at a rate determined by the Ramp Rate Control Register (see Table 21-4). The actual duty cycle output is changed once per the period of the PWM output, which is determined by the frequency of the PWM output. (See FIGURE 21-7: Illustration of PWM Ramp Rate Control on page 140.)

- If the period of the PWM output is less than the step size created by the PWM Ramp Rate, the PWM output will hold the duty cycle constant until the Ramp Rate logic increments/decrements the duty cycle by ‘1’ again. For example, if the PWM frequency is 87.7Hz (1/87.7Hz = 11.4msec) and the PWM Step time is 206msec, the PWM

© 2016-2017 Microchip Technology Inc.

duty cycle will be held constant for a minimum of 18 periods (206/11.4 = 18.07) until the Ramp Logic increments/decrements the actual PWM duty cycle by ‘1’.

- If the period of the PWM output is greater than the step size created by the PWM Ramp Rate, the ramp rate logic will force the PWM output to increment/decrement the actual duty cycle in increments larger than 1/255. For example, if the PWM frequency is 11Hz (1/11Hz = 90.9msec) and the PWM Step time is 5msec, the PWM duty cycle output will be incremented 18 or 19 out of 255 (i.e., 90.9/5 = 18.18) until it reaches the calculated duty cycle. Note that the step size may be less if the calculated duty cycle minus the actual duty cycle is less than 18.

Note: The calculated PWM Duty cycle reacts immediately to a change in the temperature reading value. The temperature reading value may be updated once in 105.8msec (default) (see Table 21-2, “ADC Conversion Sequence,” on page 126). The internal PWM duty cycle generated by the Ramp Rate control logic gradually ramps up/down to the calculated duty cycle at a rate pre-determined by the value programmed in the PWM Ramp Rate Control bits. The PWM output latches the internal duty cycle generated by the Ramp Rate Control Block every 1/(PWM frequency) seconds to determine the actual duty cycle of the PWM output pin.

PWM Output Transition from OFF to ON

When the calculated PWM Duty cycle generated by the auto fan control logic transitions from the ‘OFF’ state to the ‘ON’ state (i.e., Current PWM duty cycle>00h), the internal PWM duty cycle in the Ramp Rate Control Logic is initialized to the calculated duty cycle without any ramp time and the PWMx Current Duty Cycle register is set to this value. The PWM output will latch the current duty cycle value in the Ramp Rate Control block to control the PWM output.

PWM Output Transition from ON to OFF

Each PWM output has a control bit to determine if the PWM output will transition immediately to the OFF state (default) or if it will gradually step down to Off at the programmed Ramp Rate. These control bits (SZEN) are located in the PWMx Options registers at offsets 94h-96h.

TABLE 21-4: PWM RAMP RATE

RRx-[2:0]	PWM Ramp Time (sec) (Time from 33% Duty Cycle to 100% Duty Cycle)	PWM Ramp Time (sec) (Time from 0% Duty Cycle to 100% Duty Cycle)	Time per PWM Step (PWM Step Size = 1/255)	PWM Ramp Rate (Hz)
000	35	52.53	206 msec	4.85
001	17.6	26.52	104 msec	9.62
010	11.8	17.595	69 msec	14.49
011	7.0	10.455	41 msec	24.39
100	4.4	6.63	26 msec	38.46
101	3.0	4.59	18 msec	55.56
110	1.6	2.55	10 msec	100
111	0.8	1.275	5 msec	200

FIGURE 21-7: ILLUSTRATION OF PWM RAMP RATE CONTROL

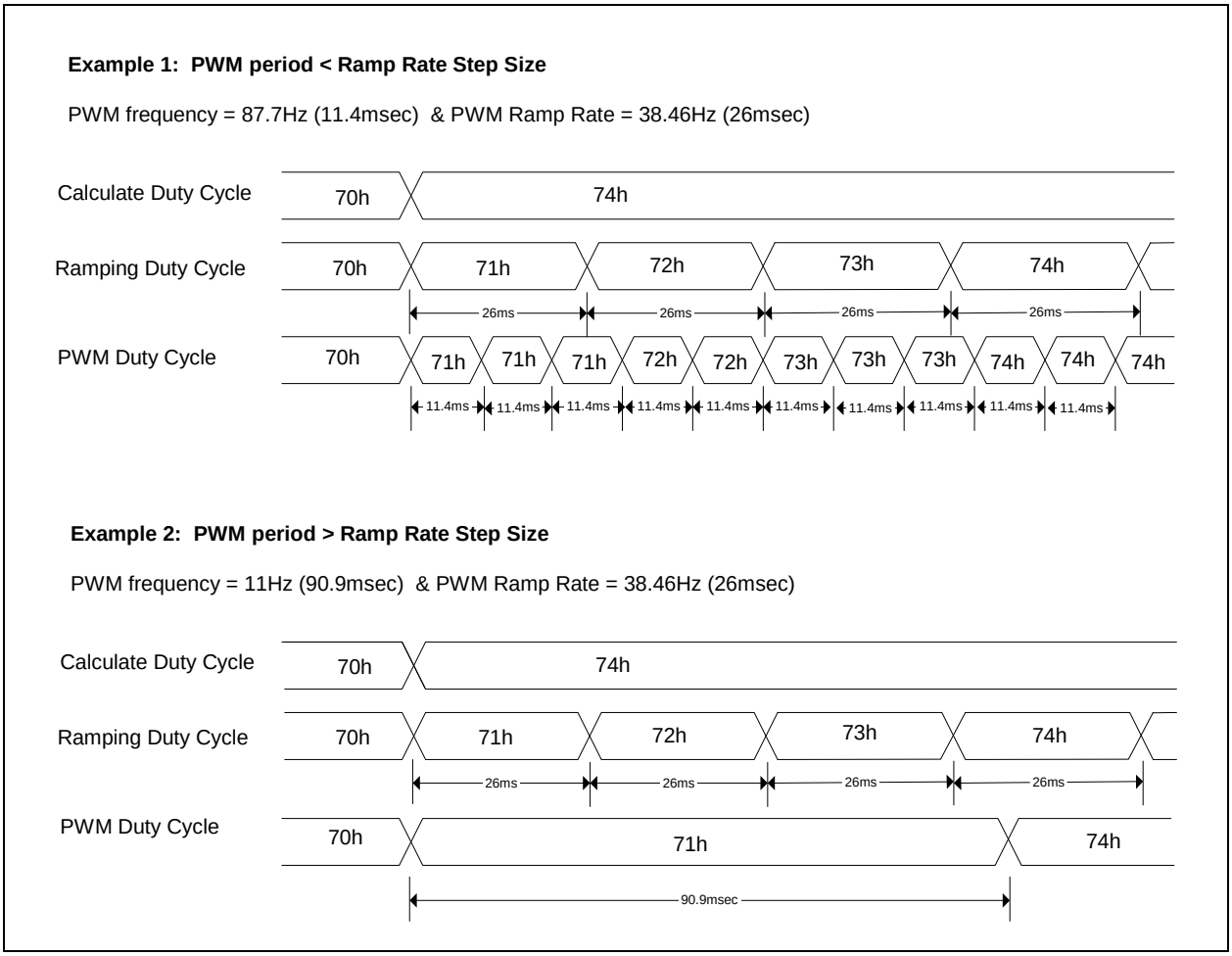

Note 1: The PWM Duty Cycle latches the Ramping Duty Cycle on the rising edge of the PWM output.

2: The calculated duty cycle, ramping duty cycle, and the PWM output duty cycle are asynchronous to each other, but are all synchronized to the internal 90kHz clock source.

It should be noted that the actual duty cycle on the pin is created by the PWM Ramp Rate Control block and latched on the rising edge of the PWM output. Therefore, the current PWM duty cycle may lag the PWM Calculated Duty Cycle.

21.13.4 OPERATION OF PWM PIN FOLLOWING A POWER CYCLE

This device has special features to control the level and operation of the PWM pin following a Power Cycle. These features are PWM Clamping and Forced Spinup.

21.13.4.1 PWM Clamp

The PWM pin has the option to be held low for 0 seconds or 2 seconds following a VCC POR. This feature is selectable by a Vbat powered register bit in the SIO Runtime Register block.

Bit[7] of the DBLCLICK register at offset 5Bh is used to select the 0 or 2 second option.

This bit is defined as follows:

- BIT[3] ZERO_SPINUP
  - 1 = zero delay for spin up
  - 0 = delay spinup by 2 seconds (default)

© 2016-2017 Microchip Technology Inc.

Following PWRGD_PS being asserted the PWM Pin will be held low until either the TRDY signal is asserted or the delay counter expires, whichever comes first. The delay counter performs two functions when set to the 2 second delay option.

1. Following a VTR POR & VCC POR, the BIOS has up to 2 seconds to program the hwm registers and enable autofan before the fans are turned on full. This is a noise reduction feature
2. Following a VCC POR only (return from sleep) the hardware requires 150.8 ms (default - see Table 21-2) to load the temperature reading registers. The TRDY signal is used to indicate when these values have been updated. TRDY is reset to zero on a VCC POR, which forces the Fans to be set to FFh. If the delay counter is enabled for up to a 2 second delay, the PWMs will be held low until the reading registers are valid. Once the registers are updated, the hardware will initiate a forced spinup (if enabled) and enter automode. See Forced Spinup on page 141.

The timing diagrams in the section titled Timing Diagrams for PWM Clamp and Forced Spinup Operation on page 142 show the effect of the 2 second PWM hold-off counter on the PWM pin.

21.13.4.2 Forced Spinup

Spinup is a feature of the auto fan control mode. Any time the PWM pin transitions from a 0% duty cycle to a non zero duty cycle the PWM pin will be forced high for the duration of spinup or until the fan are spinning within normal operating parameters as determined by the Tach Limit registers. See Spin Up on page 137 for a more detailed description of spinup. This feature can also be initiated by the PWRGD_PS signal transitioning high following a main (VCC) power cycle if the TRDY bit is set to one before the PWM Clamp is released.

Note 1: In this device, a forced spinup will be generated the first time TRDY is detected as a ‘1’ following the PWRGD_PS signal transitioning from low to high (if enabled). To enable this feature, set bit[3] of the PWMx Configuration registers to one. These registers are located at offsets 5Ch, 5Dh, and 5Eh.

2: If the TRDY bit is ‘1’ and cleared by software after being set to and then set again while the PWRGD_PS signal is high, the act of TRDY being asserted will not cause a forced spinup event.

- The duration of the forced spin-up time is controlled by the SPIN[2:0] bits located in the PWM x Configuration registers (5Ch - 5Eh). The forced spinup enable bit is located in Bit[3] SUENx of the PWMx Configuration registers. Forced Spinup defaults to disabled on a VTR POR.

21.13.4.2.1 Start of Spin-up on main (VCC) power cycle

The PWM spin-up supports the scenario where the part is powered by VTR and the fans are powered by a main power rail. If the start bit is not cleared on a main power cycle, then the PWM will remain at a level that may not start the fan when the main supply ramps up. This spinup will force each PWM into spin-up (if enabled) when the TRDY bit goes active.

21.13.4.2.2 Start of Spin-up on Standby (VTR) Power Cycle

The two second PWM Clamping feature may be used to delay the fans from being turned on full until the BIOS has the opportunity to program the limit and configuration registers for the auto fan control mode. (See PWM Clamp on page 140) This is a noise reduction feature. Once the TRDY bit goes high the clamp will be released and the fans will be forced into spinup.

Note: If the two second PWM Clamping period expires before TRDY is asserted, the PWMs will be set to Full On.

21.13.4.3 Timing Diagrams for PWM Clamp and Forced Spinup Operation

FIGURE 21-8: CASE 1 SPINUP OPERATION

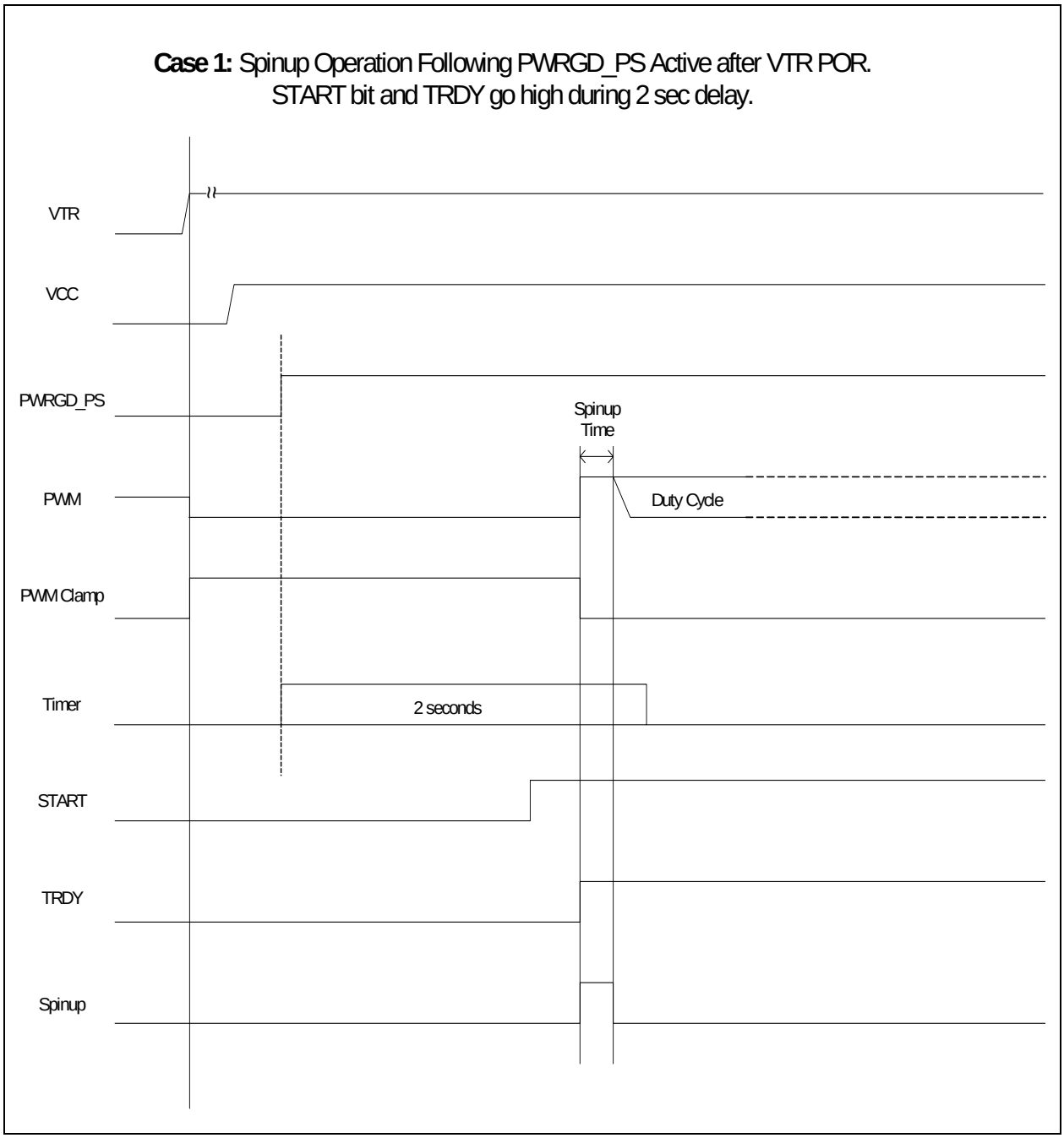

© 2016-2017 Microchip Technology Inc.

FIGURE 21-9: CASE 2 SPINUP OPERATION

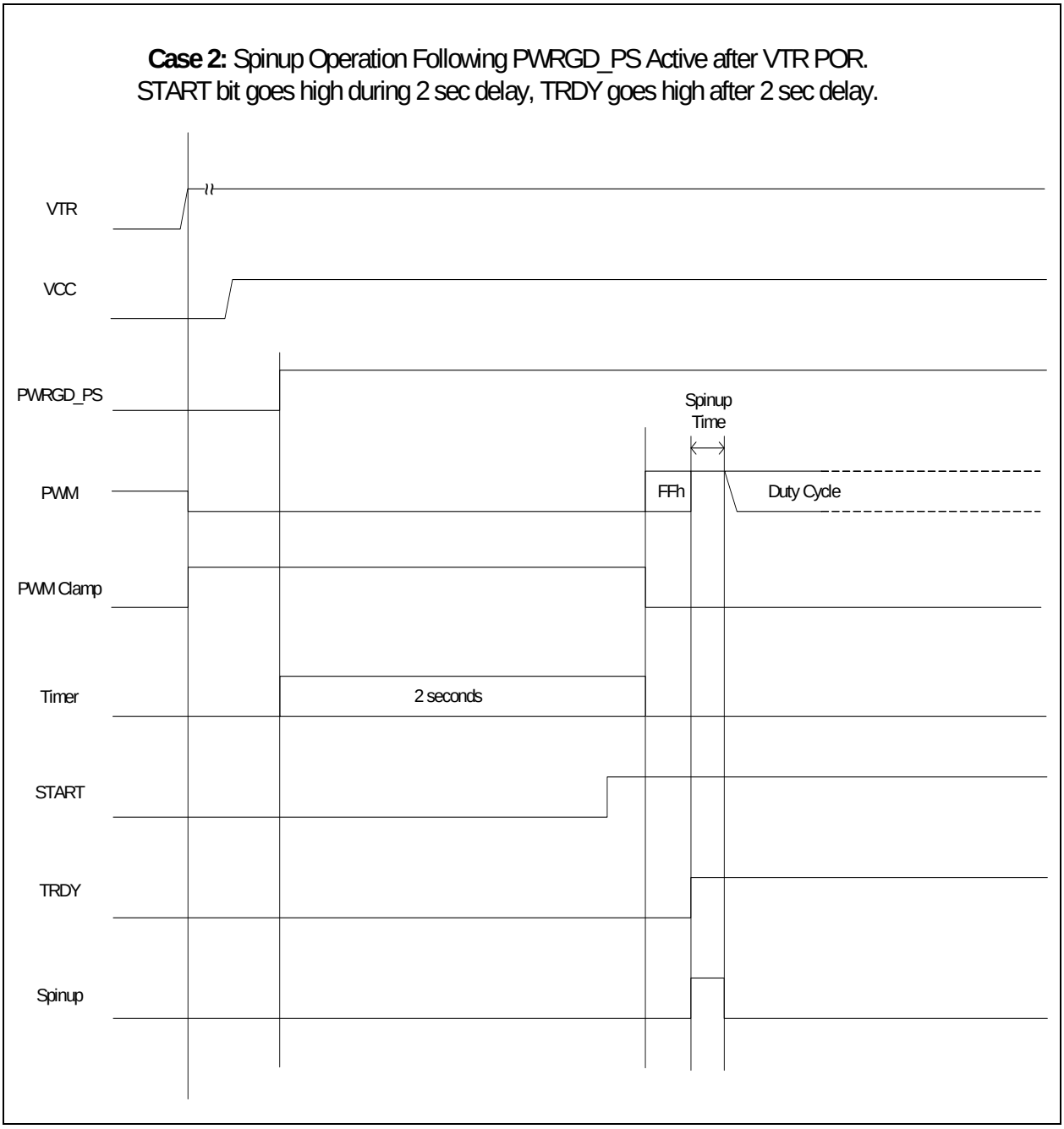

FIGURE 21-10: CASE 3 SPINUP OPERATION

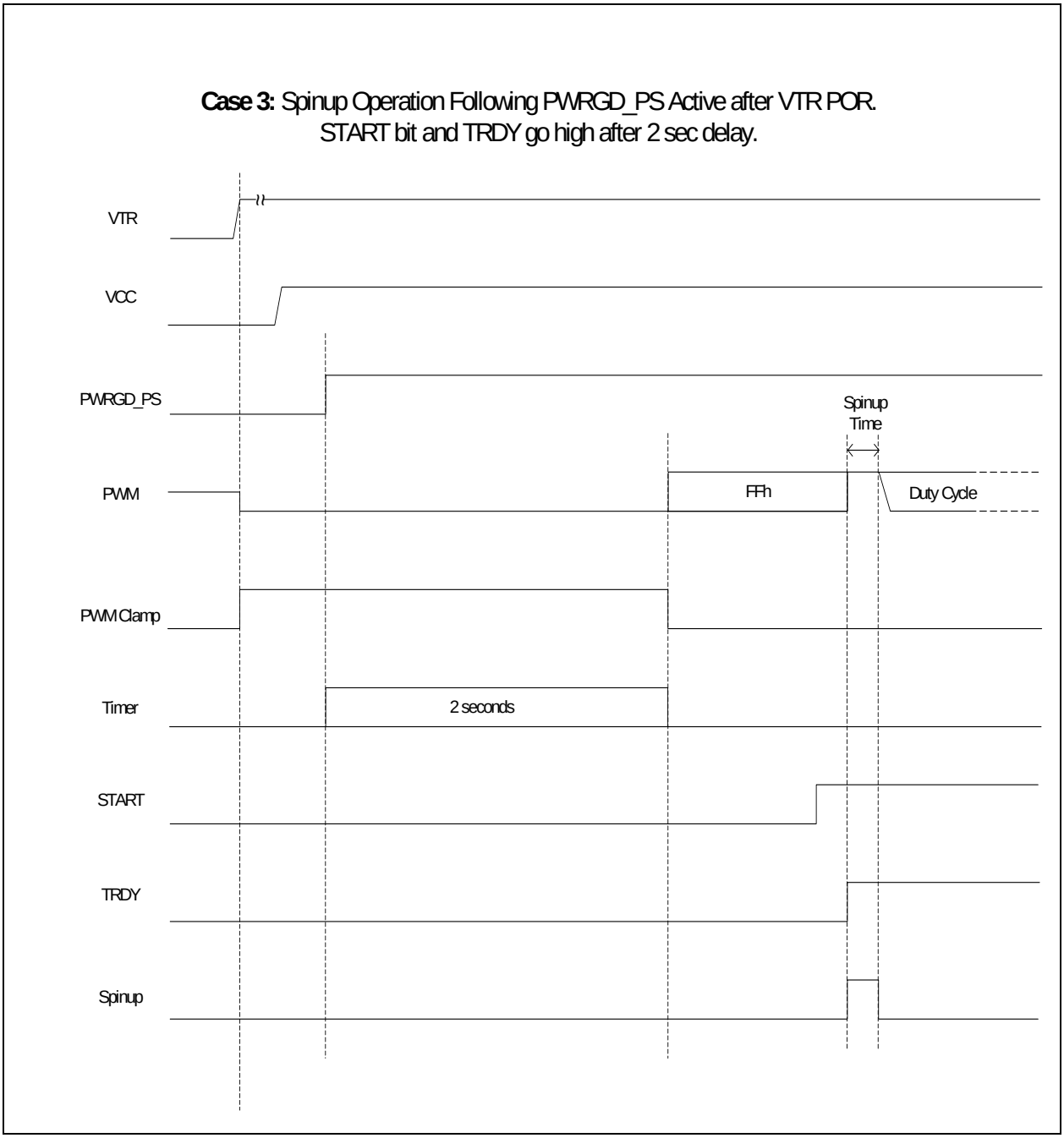

© 2016-2017 Microchip Technology Inc.

FIGURE 21-11: CASE 4 SPINUP OPERATION

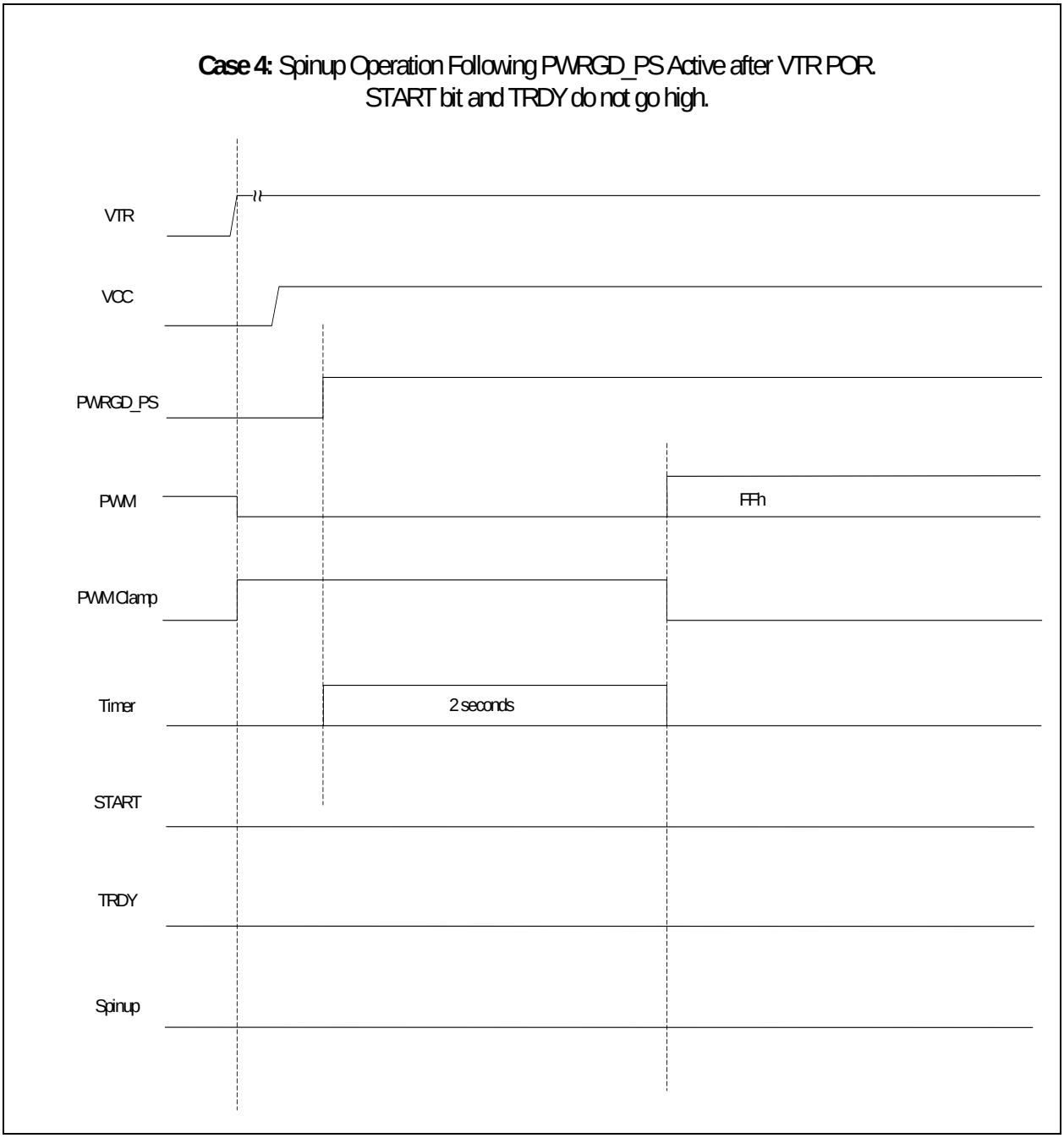

FIGURE 21-12: CASE 5 SPINUP OPERATION

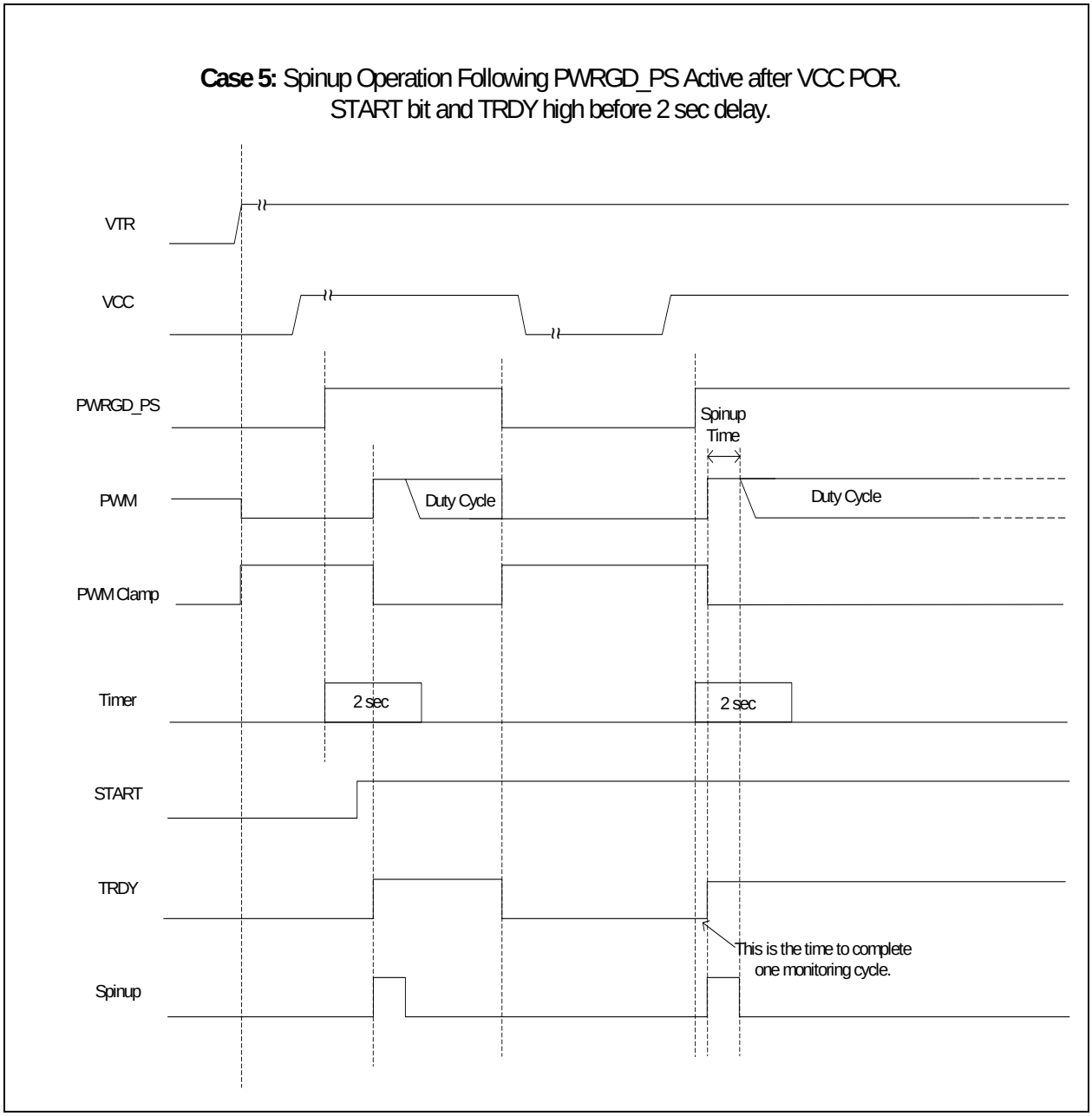

21.13.5 ACTIVE MINIMUM TEMPERATURE ADJUSTMENT (AMTA)

The AMTA operation in the SCH322x consists of a “Top Temperature” register (for each zone) that defines the upper bound of the operating temperature for the zone. If the temperature exceeds this value, the minimum temperature (Low Temp Limit) for the zone is adjusted down. This keeps the zone operating in the lower portion of the temperature range of the fan control function (PWM Duty Cycle vs. Temperature), thereby limiting fan noise by preventing the fan from going to the higher PWM duty cycles.

© 2016-2017 Microchip Technology Inc.

21.13.5.1 Adjusting Minimum Temperature Based on Top Temperature

This describes the option for adjusting the minimum temperature based on the Top Temperature.

The AMTA option automatically adjusts the preprogrammed value for the minimum temperature and shifts the temperature range for the autofan algorithm to better suit the environment of the system, that is, to bias the operating range of the autofan algorithm toward the low end of the temperature range.

It uses a programmed value for the “Top temperature” for the zone to shift the temperature range of the autofan algorithm, and therefore the speed of the fan, toward the middle of the fan control function (PWM Duty Cycle vs. Temperature). This feature will effectively prevent the fans from going on full, thereby limiting the noise produced by the fans.

The value of the Top temperature for each zone can be programmed to be near the center of the temperature range for the zone, or near the maximum as defined by the low temp limit plus range. The implementation of the AMTA feature is defined as follows:

This feature can be individually enabled to operate for each zone. Each zone has a separate enable bit for this feature (register 0B7h). Note that if the piecewise linear fan function is used, the minimum temperature for the zone (Zone x Low Temp Limit register) is shifted down, which will result in each segment being shifted down.

This feature adjusts the minimum temperature for each zone for the autofan algorithm based on the current temperature reading for the zone exceeding the Top temperature.

When the current temperature for the zone exceeds the Top temperature for the zone, the minimum temperature value is reloaded with the value of the minimum temperature limit minus a programmable temperature adjustment value for the zone, as programmed in the Min Temp Adjust registers. The temperature adjustment value is programmable for each zone.

The zone must exceed the limits set in the associated Top Temp Zone [3:1] register for two successive monitoring cycles in order for the minimum temperature value to be adjusted (and for the associated status bit to be set).

The new minimum temperature value is loaded into the low temp limit register for each zone (Zone x Low Temp Limit). This will cause the temperature range of the autofan algorithm to be biased down in temperature.

Note:	When the minimum temperature for the zone is adjusted, the autofan algorithm will operate with a new fan control function (PWM Duty Cycle vs. Temperature), which will result in a new PWM duty cycle value. The PWM will move to the new value smoothly, so there is little audible effect when the PWM Ramp rate control is enabled.

This process will repeat after a delay until the current temperature for the zone no longer exceeds the Top temperature for the zone.

Once the minimum temp value is adjusted, it will not adjust again until after a programmable time delay. The delay is programmed for each zone in the Min Temp Adjust Delay registers. The adjust times are as follows: 1, 2, 3, and 4 minutes.

Figure 8.5 illustrates the operation of the AMTA for one adjustment down in minimum temperature resulting from the temperature exceeding the Top temperature. The effect on the linear fan control function (PWM Duty Cycle vs. Temperature) is shown.

FIGURE 21-13: AMTA ILLUSTRATION, ADJUSTING MINIMUM TEMPERATURE

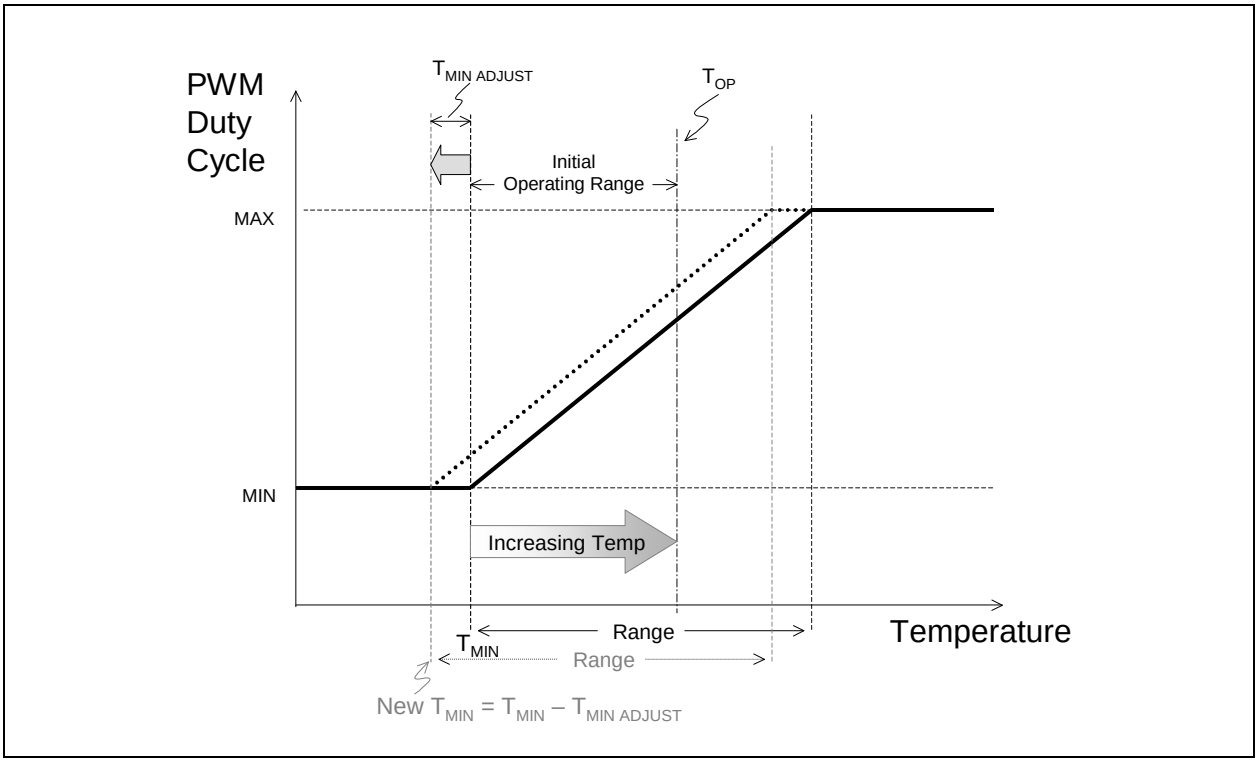

Note: If the AMTA feature is not enabled for a zone, then the Top temperature register for that zone is not used.

© 2016-2017 Microchip Technology Inc.

21.13.5.1.1 Interrupt Generation

The following figure illustrates the operation of the interrupt mapping for the AMTA feature in relation to the status bits and enable bits.

FIGURE 21-14: AMTA INTERRUPT MAPPING

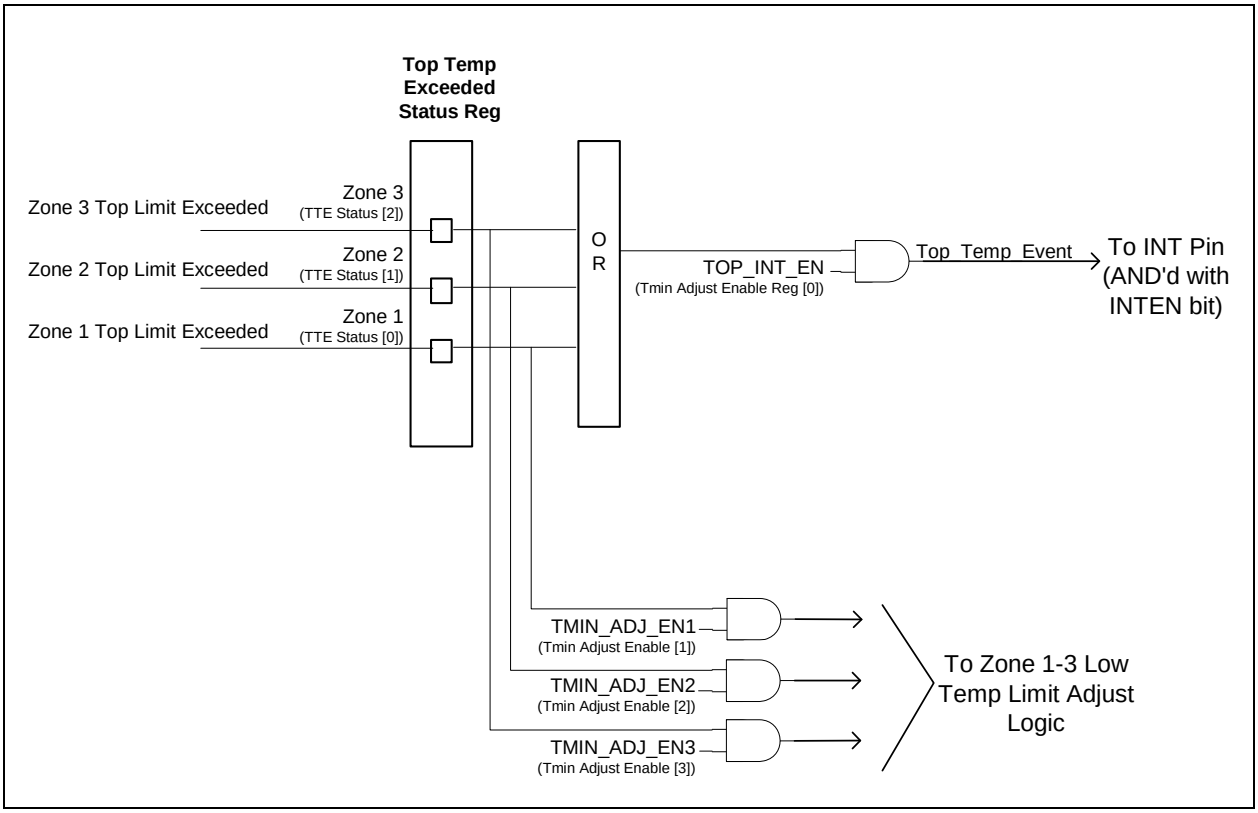

21.14 nTHERMTRIP

The nTHERMTRIP output pin can be configured to assert when any of the temperature sensors (remote diodes 1-2, internal) is above its associated temperature limit.

The Thermtrip Enable register at offset CEh selects which reading(s) will cause the nTHERMTRIP signal to be active, when the selected temperature(s) exceed in the associated limit registers (C4h for Remote Diode 1, C5h for Remote diode 2, and C9h for Ambient temp) their pre-programmed limit.

An internal version of this output will also be used by the RESGEN block to generate a system reset pulse. More details can be found in Section 16.0, "Reset Generation," on page 101.

21.14.1 NTHERMTRIP OPERATION

The nTHERMTRIP pin can be configured to assert when one of the temperature zones is above its associated nTHERMTRIP temperature limit (THERMTRIP Temp Limit Zone[3:1]). The Thermtrip temperature limit is a separate limit register from the high limit used for setting the interrupt status bits for each zone.

The THERMTRIP Limit Zone[3:1] registers represent the upper temperature limit for asserting nTHERMTRIP for each zone. These registers are defined as follows: If the monitored temperature for the zone exceeds the value set in the associated THERMTRIP Temp Limit Zone[3:1], the corresponding bit in the THERMTRIP status register will be set. The nTHERMTRIP pin may or may not be set depending on the state of the associated enable bits (in the THERM Output Enable register).

Each zone may be individually enabled to assert the nTHERMTRIP pin (as an output).

The zone must exceed the limits set in the associated THERMTRIP Temp Limit Zone [3:1] register for two successive monitoring cycles in order for the nTHERMTRIP pin to go active (and for the associated status bit to be set).

The following figures summarize the THERMTRIP operation in relation to the THERMTRIP status bits.

FIGURE 21-15: NTHERMTRIP OUTPUT OPERATION

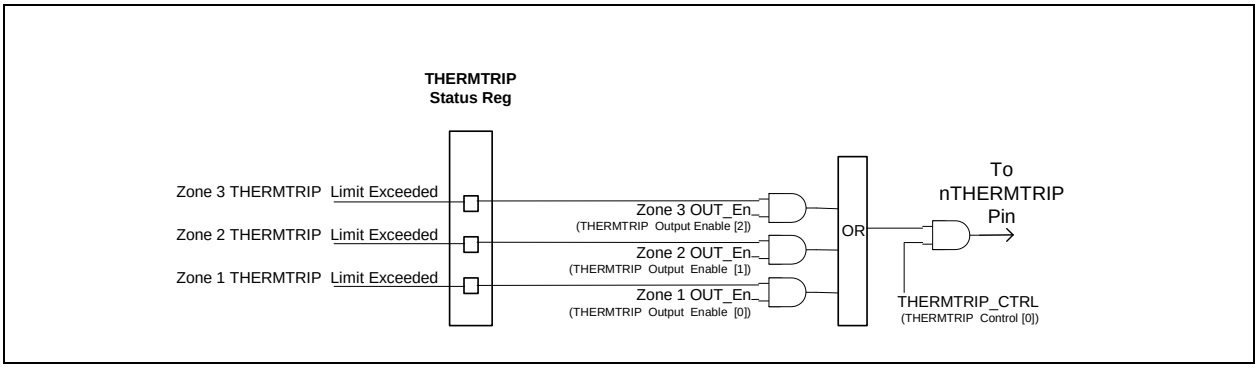

21.14.2 FAN SPEED MONITORING

The chip monitors the speed of the fans by utilizing fan tachometer input signals from fans equipped with tachometer outputs. The fan tachometer inputs are monitored by using the Fan Tachometer registers. These signals, as well as the Fan Tachometer registers, are described below.

The tachometers will operate in one of two modes:

- Mode 1: Standard tachometer reading mode. This mode is used when the fan is always powered when the duty cycle is greater than 00h.
- Mode 2: Enhanced tachometer reading mode. This mode is used when the PWM is pulsing the fan.

21.14.2.1 TACH Inputs

The tachometer inputs are implemented as digital input buffers with logic to filter out small glitches on the tach signal.

21.14.2.2 Selecting the Mode of Operation:

The mode is selected through the Mode Select bits located in the Tach Option register. This Mode Select bit is defined as follows:

- 0=Mode 1: Standard tachometer reading mode
- 1=Mode 2: Enhanced tachometer reading mode

<u>Default Mode of Operation:</u>

- Mode 1
- Slow interrupt disabled (Don't force FFFEh)
- Tach interrupt enabled via enable bit
- Tach Limit = FFFFh
- Tach readings updated once a second

21.14.2.3 Mode 1 – Always Monitoring

Mode 1 is the simple case. In this mode, the Fan is always powered when it is ‘ON’ and the fan tachometer output ALWAYS has a valid output. This mode is typically used if a linear DC Voltage control circuit drives the fan. In this mode, the fan tachometer simply counts the number of 90kHz pulses between the programmed number of edges (default = 5 edges). The fan tachometer reading registers are continuously updated.

The counter is used to determine the period of the Fan Tachometer input pulse. The counter starts counting on the first edge and continues counting until it detects the last edge or until it reaches FFFFh. If the programmed number of edges is detected on or before the counter reaches FFFFh, the reading register is updated with that count value. If the counter reaches FFFFh and no edges were detected a stalled fan event has occurred and the Tach Reading register will be set to FFFFh. If one or more edges are detected, but less than the programmed number of edges, a slow fan event has

© 2016-2017 Microchip Technology Inc.

occurred and the Tach Reading register will be set to either FFFEh or FFFFh depending on the state of the Slow Tach bits located in the TACHx Options registers at offsets 90h - 93h. Software can easily compute the RPM value using the tachometer reading value if it knows the number of edges per revolution.

Note 1: If the PWM output associated with a tach input is configured for the high frequency option then the tach input must be configured for Mode 1.

2: Some enhanced features added to support Mode 2, are available to Mode 1 also. They are: programmable number of tach edges and force tach reading register to FFFEh to indicate a SLOW fan.

3: Five edges or two tach pulses are generated per revolution.

4: If a tach input is left unconnected it must be configured for Mode 1.

21.14.2.4 Mode 2 – Monitor Tach input When PWM is ‘ON’

In this mode, the PWM is used to pulse the Fan motor of a 3-wire fan. 3-wire fans use the same power supply to drive the fan motor and to drive the tachometer output logic. When the PWM is ‘ON’ the fan generates valid tach pulses. When the PWM is not driving the Fan, the tachometer signal is not generated and the tach signal becomes indeterminate or tristate. Therefore, Mode 2 only makes tachometer measurements when the associated PWM is driving high during an update cycle. As a result, the Fan tachometer measurement is “synchronized” to the PWM output, such that it only looks for tach pulses when the PWM is ‘ON’.

Note: Any fan tachometer input may be associated with any PWM output (see Linking Fan Tachometers to PWMs on page 155.)

During an update cycle, if an insufficient number of tachometer pulses are detected during this time period, the following applies: If at least one edge but less than the programmed number of edges is detected, the fan is considered slow. If no edge is detected, the fan is considered stopped.

Note 1: The interrupt status bits are set, if enabled, to indicate that a slow or stopped fan event has occurred when the tach reading registers are greater than the tach limit registers.

2: At some duty cycles, the programmed number of edges will appear during some PWM High times, but not all. If opportunistic mode is enabled, the tach logic will latch the count value any time it detects the programmed number of edges and reset the update counter. An interrupt will only be generated if no valid readings were made during the programmed update time.

21.14.2.5 Assumptions (refer to Figure 21-16 - PWM and Tachometer Concept):

The Tachometer pulse generates 5 transitions per fan revolution (i.e., two fan tachometer periods per revolution, edges 2→6). One half of a revolution (one tachometer period) is equivalent to three edges (2→4 or 3→5). One quarter of a revolution (one-half tachometer period) is equivalent to two edges. To obtain the fan speed, count the number of 90Khz pulses that occurs between 2 edges i.e., 2→3, between 3 edges i.e., 2→4, or between 5 edges, i.e. 2→6 (the case of 9 edges is not shown). The time from 1-2 occurs through the guard time and is not to be used. For the discussion below, an edge is a high-to-low or low-to-high transition (edges are numbered – refer to Figure 21-16 - PWM and Tachometer Concept.

The Tachometer circuit begins monitoring the tach when the associated PWM output transitions high and the guard time has expired. Each tach circuit will continue monitoring until either the “ON” time ends or the programmed number of edges has been detected, whichever comes first.

The Fan Tachometer value may be updated every 300ms, 500ms, or 1000ms.

FIGURE 21-16: PWM AND TACHOMETER CONCEPT

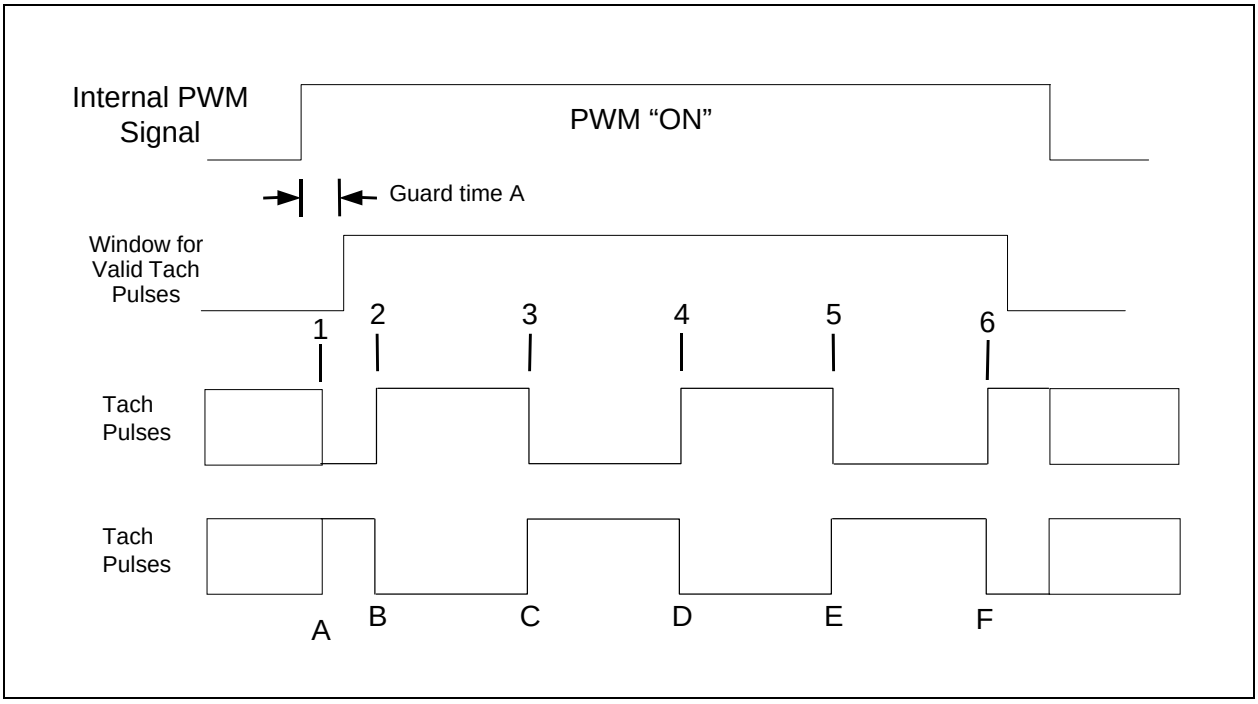

21.14.2.5.1 Fan Tachometer Options for Mode 2

- 2, 3, 5 or 9 "edges" to calculate the fan speed (Figure 21-16)
- Guard time A is programmable (8-63 clocks) to account for delays in the system (Figure 21-16)
- Suggested PWM frequencies for mode 2 are: 11.0 Hz, 14.6 Hz, 21.9 Hz, 29.3 Hz, 35.2 Hz, 44.0 Hz, 58.6 Hz, 87.7Hz
- Option to ignore first 3 tachometer edges after guard time
- Option to force tach reading register to FFFEh to indicate a slow fan.

21.14.2.6 Fan Tachometer Reading Registers:

The Tachometer Reading registers are 16 bits, unsigned. When one byte of a 16-bit register is read, the other byte latches the current value until it is read, in order to ensure a valid reading. The order is LSB first, MSB second. The value FFFFh indicates that the fan is not spinning, or the tachometer input is not connected to a valid signal (this could be triggered by a counter overflow). These registers are read only – a write to these registers has no effect.

Note 1: The Fan Tachometer Reading registers always return an accurate fan tachometer measurement, even when a fan is disabled or non-functional.

2: FFFFh indicates that the fan is not spinning, or the tachometer input is not connected to a valid signal (This could be triggered by a counter overflow).

3: The Tachometer registers are read only – a write to these registers has no effect.

4: Mode 1 should be enabled and the tachometer limit register should be set to FFFFh if a tachometer input is left unconnected.

© 2016-2017 Microchip Technology Inc.

21.14.2.7 Programming Options for Each Tachometer Input

The features defined in this section are programmable via the TACHx Option registers located at offsets 90h-92h and the PWMx Option registers located at offsets 94h-96h.

21.14.2.7.1 Tach Reading Update Time

In Mode 1, the Fan Tachometer Reading registers are continuously updated. In Mode 2, the fan tachometer registers are updated every 300ms, 500msec, or 1000msec. This option is programmed via bits[1:0] in the PWMx Option register. The PWM associated with a particular TACH(s) determines the TACH update time.

21.14.2.7.2 Programmed Number Of Tach Edges

In modes 1 & 2, the number of edges is programmable for 2, 3, 5 or 9 edges (i.e., ½ tachometer pulse, 1 tachometer pulse, 2 tachometer pulses, 4 tachometer pulses). This option is programmed via bits[2:1] in the TachX Option register.

Note:	The “5 edges” case corresponds to two tachometer pulses, or 1 RPM for most fans. Using the other edge options will require software to scale the values in the reading register to correspond to the count for 1 RPM.

21.14.2.7.3 Guard Time (Mode 2 Only)

The guard time is programmable from 8 to 63 clocks (90kHz). This option is programmed via bits[4:3] in the TachX Option register.

21.14.2.7.4 Ignore first 3 tachometer edges (Mode 2 Only)

Option to ignore first 3 tachometer edges after guard time. This option is programmed for each tachometer via bits[2:0] in the TACHx Option register. Default is do not ignore first 3 tachometer edges after guard time.

21.14.2.8 Summary of Operation for Modes 1 & 2

The following summarizes the detection cases:

- **No edge occurs during the PWM ‘ON’ time:** indicate this condition as a stalled fan
  - The tachometer reading register contains FFFFh.
- **One edge (or less than programmed number of edges) occurs during the PWM ‘ON’ time:** indicate this condition as a slow fan.
  - If the SLOW bit is enabled, the tachometer reading register will be set to FFFEh to indicate that this is a slow fan instead of a seized fan. Note that this operation also pertains to the case where the tachometer counter reaches FFFFh before the programmed number of edges occurs.
  - If the SLOW bit is disabled, the tachometer reading register will be set to FFFFh. In this case, no distinction is made between a slow or seized fan.

Note:	The Slow Interrupt Enable feature (SLOW) is configured in the TACHx Options registers at offsets 90h to 93h.

- The programmed number of edges occurs:
  - Mode 1: If the programmed number of edges occurs before the counter reaches FFFFh latch the tachometer count
  - Mode 2: If the programmed number of edges occurs during the PWM ‘ON’ time: latch the tachometer count (see **Note** below).

Note 1: Whenever the programmed number of edges is detected, the edge detection ends and the state machine is reset. The tachometer reading register is updated with the tachometer count value at this time. See Detection of a Stalled Fan on page 154 for the exception to this behavior.

2: In the case where the programmed number of edges occurs during the “on”, the tachometer value is latched when the last required edge is detected.

21.14.2.9 Examples of Minimum RPMs Supported

The following tables show minimum RPMs that can be supported with the different parameters. The first table uses 3 edges and the second table uses 2 edges.

TABLE 21-5: MINIMUM RPM DETECTABLE USING 3 EDGES

PWM Frequency	Pulse Width at Duty Cycle (PWM "ON" Time)			Minimum RPM at Duty Cycle (Note 21-2) ($30/T_{TachPulse}$)		
(HZ)	25% (MSEC)	50% (MSEC)	100% (MSEC) (Note 21-1)	25%	50%	100%
87.7	2.85	5.7	11.36	10865	5347	2662
58.6	4.27	8.53	17	7175	3554	1774
44	5.68	11.36	22.64	5366	2662	1330
35.2	7.1	14.2	28.3	4279	2126	1063
29.3	8.53	17.06	34	3554	1768	885
21.9	11.42	22.83	45.48	2648	1319	661
14.6	17.12	34.25	68.23	1761	878	440
11	22.73	45.45	90.55	1325	661	332

Note 21-1 100% duty cycle is 255/256

Note 21-2 RPM=60/$T_{Revolution}$, $T_{TachPulse}$= $T_{Revolution}$/2. Using 3 edges for detection, $T_{TachPulse}$ = (PWM "ON" Time – Guard Time). Minimum RPM values shown use minimum guard time (88.88usec).

TABLE 21-6: MINIMUM RPM DETECTABLE USING 2 EDGES

PWM Frequency	Pulse Width at Duty Cycle (PWM "ON" Time)			Minimum RPM at Duty Cycle (Note 21-4) ($30/T_{TachPulse}$)		
(HZ)	25% (MSEC)	50% (MSEC)	100% (MSEC) (Note 21-3)	25%	50%	100%
87.7	2.85	5.7	11.36	5433	2673	1331
58.6	4.27	8.53	17	3588	1777	887
44	5.68	11.36	22.64	2683	1331	665
35.2	7.1	14.2	28.3	2139	1063	532
29.3	8.53	17.06	34	1777	884	442
21.9	11.42	22.83	45.48	1324	660	330
14.6	17.12	34.25	68.23	881	439	220
11	22.73	45.45	90.55	663	331	166

Note 21-3 100% duty cycle is 255/256

Note 21-4 RPM=60/$T_{Revolution}$, $T_{TachPulse}$= $T_{Revolution}$/2. Using 2 edges for detection, $T_{TachPulse}$ = 2*(PWM "ON" Time-Guard Time). Minimum RPM values shown use minimum guard time (88.88usec).

21.14.2.10 Detection of a Stalled Fan

There is a fan failure bit (TACHx) in the interrupt status register used to indicate that a slow or stalled fan event has occurred. If the tach reading value exceeds the value programmed in the tach limit register the interrupt status bit is set. See Interrupt Status register 2 at offset 42h.

Note 1: The reading register will be forced to FFFFh if a stalled event occurs (i.e., stalled event =no edges detected.)

2: The reading register will be forced to either FFFFh or FFFEh if a slow fan event occurs. (i.e., slow event: 0 < #edges < programmed #edges). If the control bit, SLOW, located in the TACHx Options registers at offsets 90h - 93h, is set then FFFEh will be forced into the corresponding Tach Reading Register to indicate that the fan is spinning slowly.

© 2016-2017 Microchip Technology Inc.

3: The fan tachometer reading register stays at FFFFh in the event of a stalled fan. If the fan begins to spin again, the tachometer logic will reset and latch the next valid reading into the tachometer reading register.

21.14.2.11 Fan Interrupt Status Bits

The status bits for the fan events are in Interrupt Status Register 2 (42h). These bits are set when the reading register is above the tachometer minimum and the Interrupt Enable 2 (Fan Tachs) register bits are configured to enable Fan Tach events. No interrupt status bits are set for fan events (even if the fan is stalled) if the associated tachometer minimum is set to FFFFh (registers 54h-5Bh).

Note:	The Interrupt Enable 2 (Fan Tachs) register at offset 80h defaults to enabled for the individual tachometer status events bits. The group Fan Tach nHWM_INT bit defaults to disabled. This bit needs to be set if Fan Tach interrupts are to be generated on the external nHWM_INT pin.

See FIGURE 21-3: Interrupt Control on page 128.

21.14.3 LOCKED ROTOR SUPPORT FOR TACHOMETER INPUTS

All tachometer inputs support locked rotor input mode. In this mode, the tachometer input pin is not used as a tachometer signal, but as a level signal. The active state of this signal (high or low) is the state that the fan's locked rotor signal indicates the locked condition.

The locked rotor signals that are supported are active high level and active low level. They are selectable for each tachometer. If the pin goes to its programmed active state, the associated interrupt status bit will be set. In addition, if properly configured, the nHWM_INT pin can be made to go active when the status bit is set.

The locked rotor input option is configured through the following bits:

- Tach1 Mode, bits[7:6] of Tach 1-3 Mode register
- Tach2 Mode, bits[5:4]of Tach 1-3 Mode register
- Tach3 Mode, bit[3:2] of Tach 1-3 Mode register

These bits are defined as follows:

- 00=normal operation (default)
- 01=locked rotor mode, active high signal
- 10=locked rotor mode, active low signal
- 11=undefined

21.14.4 LINKING FAN TACHOMETERS TO PWMS

The TACH/PWM Association Register at offset 81h is used to associate a Tachometer input with a PWM output. This association has three purposes:

1. The auto fan control logic supports a feature called SpinUp Reduction. If SpinUp Reduction is enabled (SUREN bit), the auto fan control logic will stop driving the PWM output high if the associated TACH input is operating within normal parameters. (Note: SUREN bit is located in the Configuration Register at offset 7Fh)
2. To measure the tachometer input in Mode 2, the tachometer logic must know when the associated PWM is 'ON'.
3. Inhibit fan tachometer interrupts when the associated PWM is 'OFF'.

See the description of the PWM_TACH register. The default configuration is:

PWM1 -> FANTACH1

PWM2 -> FANTACH2

PWM3 -> FANTACH3

Note:	If a FANTACH is associated with a PWM operating in high frequency mode (see the Zonex Range/FANx Frequency registers (5Fh-61h)) the tach monitoring logic must be configured for Mode 1 (see Bit[3] Mode in FANTACHx Option Registers, 90h-92h).

21.15 High Frequency PWM Options

Note: If a fan with a tachometer output is driven by the high frequency PWM option, the tachometer must be monitored in Mode 1 only.

21.15.1 PWM FREQUENCIES SUPPORTED

The SCH322x supports low frequency and high frequency PWMs. The low frequency options are 11.0Hz, 14.6Hz, 21.9Hz, 29.3Hz, 35.2Hz, 44.0Hz, 58.6Hz and 87.7Hz. The high frequency options are 15kHz, 20kHz, 25kHz and 30kHz. All PWM frequencies are derived from the 14.318MHz clock input.

The frequency of the PWM output is determined by the Frequency Select bits[3:0]. The default PWM frequency is 25kHz.

© 2016-2017 Microchip Technology Inc.

22.0 HARDWARE MONITORING REGISTER SET

These registers are accessed through an index and data register scheme using the HW_Reg_INDEX and HW_Reg_-DATA registers located in the runtime register block at offset 70h and 71h from the address programmed in Logical Device A. The Hardware Monitor Block registers are located at the indexed address shown in Table 22-1, "Register Summary".

CAUTION: The HWM block is unsupported in the SCH3222 device. These registers, as well as the HW_Reg_INDEX and HW_Reg_DATA registers at Runtime offsets 70h and 71h, are unsupported, and should not be accessed. Do not attempt to change their configurations from their POR defaults, because doing so may cause unpredictable behavior and/or excessive currents, and therefore may damage the device and/or the system.

Definition for the Lock column:

Yes = Register is made read-only when the lock bit is set; No = Register is not made read-only when the lock bit is set.

TABLE 22-1: REGISTER SUMMARY

Reg Addr	Read/ Write	Reg Name		Bit 7 MSb	Bit 6	Bit 5	Bit 4	Bit 3	Bit 2	Bit 1	Bit 0 LSb	Default Value	Lock	
10h	R/W	MCHP Test Register		7	6	5	4	3	2	1	0	00h	No	
1Dh	R	Reserved	N/A	RES	RES	RES	RES	RES	RES	RES	RES	00h		
1Eh	R	Reserved	N/A	RES	RES	RES	RES	RES	RES	RES	RES	00h		
1Fh	R	Reserved	N/A	RES	RES	RES	RES	RES	RES	RES	RES	00h		
20h	R	+2.5V		7	6	5	4	3	2	1	0	00h	No	
21h	R	+1.5V Reading from Vccp pin		7	6	5	4	3	2	1	0	00h	No	
22h	R	VCC		7	6	5	4	3	2	1	0	00h	No	
23h	R	5V		7	6	5	4	3	2	1	0	00h	No	
24h	R	12V		7	6	5	4	3	2	1	0	00h	No	
25h	R	Remote Diode 1 (Zone 1) Temp Reading		7	6	5	4	3	2	1	0	00h	No	
26h	R	Internal Temp (Zone 2) Reading		7	6	5	4	3	2	1	0	00h	No	
27h	R	Remote Diode 2 (Zone 3) Temp Reading		7	6	5	4	3	2	1	0	00h	No	
28h	R	FANTACH1 LSB		7	6	5	4	3	2	1	0	FFh Note 22-8	No	
29h	R	FANTACH1 MSB		15	14	13	12	11	10	9	8	FFh Note 22-8	No	
2Ah	R	FANTACH2 LSB		7	6	5	4	3	2	1	0	FFh Note 22-8	No	
2Bh	R	FANTACH2 MSB		15	14	13	12	11	10	9	8	FFh Note 22-8	No	
2Ch	R	FANTACH3 LSB		7	6	5	4	3	2	1	0	FFh Note 22-8	No	
2Dh	R	FANTACH3 MSB		15	14	13	12	11	10	9	8	FFh Note 22-8	No	
2Eh	R	Reserved		RES	RES	RES	RES	RES	RES	RES	RES	00h	No	
2Fh	R	Reserved		RES	RES	RES	RES	RES	RES	RES	RES	00h	No	
30h	R/W Note 2 2-1	PWM1 Current Duty Cycle		7	6	5	4	3	2	1	0	N/A Note 22-10 00	Yes Note 2 2-1	
31h	R/W Note 2 2-1	PWM2 Current Duty Cycle		7	6	5	4	3	2	1	0	N/A Note 22-10 00	Yes Note 2 2-1	
32h	R/W Note 2 2-1	PWM3 Current Duty Cycle		7	6	5	4	3	2	1	0	N/A Note 22-10 00	Yes	
33-3Ch	R	Reserved		RES	RES	RES	RES	RES	RES	RES	RES	00h	No	
3Dh	R	Device ID		7	6	5	4	3	2	1	0	8Ch	No	
3Eh	R	Company ID		7	6	5	4	3	2	1	0	5Ch	No	
3Fh	R	Revision		7	6	5	4	3	2	1	0	01h	No	

TABLE 22-1: REGISTER SUMMARY (CONTINUED)

Reg Addr	Read/ Write	Reg Name		Bit 7 MSb	Bit 6	Bit 5	Bit 4	Bit 3	Bit 2	Bit 1	Bit 0 LSb	Default Value	Lock	
40h	R/W Note 2 2-2	Ready/Lock/Start		RES	RES	RES	Vbat Mon	OVRID	READY	LOCK Note 2 2-9	START	04h	Yes Note 2 2-2	
41h	R/WC Note 2 2-3	Interrupt Status Register 1		INT23	D2	AMB	D1	5V	VCC	Vccp	2.5V	00h Note 22-8	No	
42h	R/WC Note 2 2-3	Interrupt Status Register 2		ERR2	ERR1	RES	FAN-TACH3	FAN-TACH2	FAN-TACH1	RES	12V	00h	No	
43h	R	Reserved		RES	RES	RES	RES	RES	RES	RES	RES	00h	No	
44h	R	2.5V Low limit		7	6	5	4	3	2	1	0	00h	N/A	
45h	R	2.5V High limit		7	6	5	4	3	2	1	0	FFh	N/A	
46h	R	Vccp Low limit		7	6	5	4	3	2	1	0	00h	N/A	
47h	R	Vccp High limit		7	6	5	4	3	2	1	0	FFh	N/A	
48h	R	VCC Low limit		7	6	5	4	3	2	1	0	00h	N/A	
49h	R	VCC High limit		7	6	5	4	3	2	1	0	FFh	N/A	
4Ah	R	5V Low limit		7	6	5	4	3	2	1	0	00h	N/A	
4Bh	R	5V High limit		7	6	5	4	3	2	1	0	FFh	N/A	
4Ch	R	12V Low limit		7	6	5	4	3	2	1	0	00h	N/A	
4Dh	R	12V High limit		7	6	5	4	3	2	1	0	FFh	N/A	
4Eh	R/W	Remote Diode 1 Low Temp		7	6	5	4	3	2	1	0	81h	No	
4Fh	R/W	Remote Diode 1 High Temp		7	6	5	4	3	2	1	0	7Fh	No	
50h	R/W	Internal Diode Low Temp		7	6	5	4	3	2	1	0	81h	No	
51h	R/W	Internal Diode High Temp		7	6	5	4	3	2	1	0	7Fh	No	
52h	R/W	Remote Diode 2 Low Temp		7	6	5	4	3	2	1	0	81h	No	
53h	R/W	Remote Diode 2 High Temp		7	6	5	4	3	2	1	0	7Fh	No	
54h	R/W	FANTACH1 Minimum LSB		7	6	5	4	3	2	1	0	FFh	No	
55h	R/W	FANTACH1 Minimum MSB		15	14	13	12	11	10	9	8	FFh	No	
56h	R/W	FANTACH2 Minimum LSB		7	6	5	4	3	2	1	0	FFh	No	
57h	R/W	FANTACH2 Minimum MSB		15	14	13	12	11	10	9	8	FFh	No	
58h	R/W	FANTACH3 Minimum LSB		7	6	5	4	3	2	1	0	FFh	No	
59h	R/W	FANTACH3 Minimum MSB		15	14	13	12	11	10	9	8	FFh	No	
5Ah	R	Reserved		RES	RES	RES	RES	RES	RES	RES	RES	00h	No	
5Bh	R	Reserved		RES	RES	RES	RES	RES	RES	RES	RES	00h	No	
5Ch	R/W	PWM 1 Configuration		ZON2	ZON1	ZON0	INV	SUEN1	SPIN2	SPIN1	SPIN0	62h	Yes	
5Dh	R/W	PWM 2 Configuration		ZON2	ZON1	ZON0	INV	SUEN2	SPIN2	SPIN1	SPIN0	62h	Yes	
5Eh	R/W	PWM 3 Configuration		ZON2	ZON1	ZON0	INV	SUEN3	SPIN2	SPIN1	SPIN0	62h	Yes	
5Fh	R/W	Zone 1 Range/PWM 1 Frequency		RAN3	RAN2	RAN1	RAN0	FRQ3	FRQ2	FRQ1	FRQ0	CBh	Yes	
60h	R/W	Zone 2 Range/PWM 2 Frequency		RAN3	RAN2	RAN1	RAN0	FRQ3	FRQ2	FRQ1	FRQ0	CBh	Yes	
61h	R/W	Zone 3 Range/PWM 3 Frequency		RAN3	RAN2	RAN1	RAN0	FRQ3	FRQ2	FRQ1	FRQ0	CBh	Yes	
62h	R/W	PWM1 Ramp Rate Control		RES1 Note 2 2-7	RES1 Note 2 2-7	RES1 Note 2 2-7	RES	RR1E	RR1-2	RR1-1	RR1-0	00h	Yes	
63h	R/W	PWM 2, PWM3 Ramp Rate Control		RR2E	RR2-2	RR2-1	RR2-0	RR3E	RR3-2	RR3-1	RR3-0	00h	Yes	
64h	R/W	PWM 1 MINIMUM Duty Cycle		7	6	5	4	3	2	1	0	80h	Yes	
65h	R/W	PWM 2 MINIMUM Duty Cycle		7	6	5	4	3	2	1	0	80h	Yes	
66h	R/W	PWM 3 MINIMUM Duty Cycle		7	6	5	4	3	2	1	0	80h	Yes	
67h	R/W	Zone 1 (Remote Diode 1) Low Temp Limit		7	6	5	4	3	2	1	0	80h Note 22-8	Yes	
68h	R/W	Zone 2 (Ambient) Low Temp Limit		7	6	5	4	3	2	1	0	80h Note 22-8	Yes	
69h	R/W	Zone 3 (Remote Diode 2) Low Temp Limit		7	6	5	4	3	2	1	0	80h Note 22-8	Yes	
6Ah	R/W	Zone 1 Temp Absolute Limit		7	6	5	4	3	2	1	0	64h	Yes	
6Bh	R/W	Zone 2 Temp Absolute Limit		7	6	5	4	3	2	1	0	64h	Yes	
6Ch	R/W	Zone 3 Temp Absolute Limit		7	6	5	4	3	2	1	0	64h	Yes	
6Dh	R	Reserved		RES	RES	RES	RES	RES	RES	RES	RES	00h	No	
6Eh	R	MCHP Test Register		7	6	5	4	3	2	1	0	44h	No	
6Fh	R	MCHP Test Register		7	6	5	4	RES	RES	RES	RES	40h	No	

© 2016-2017 Microchip Technology Inc.

TABLE 22-1: REGISTER SUMMARY (CONTINUED)

Reg Addr	Read/ Write	Reg Name		Bit 7 MSb	Bit 6	Bit 5	Bit 4	Bit 3	Bit 2	Bit 1	Bit 0 LSb	Default Value	Lock	
70h	R	MCHP Test Register		TST7	TST6	TST5	TST4	TST3	TST2	TST1	TST0	N/A	No	
71h	R	MCHP Test Register		TST7	TST6	TST5	TST4	TST3	TST2	TST1	TST0	N/A	No	
72h	R	MCHP Test Register		TST7	TST6	TST5	TST4	TST3	TST2	TST1	TST0	N/A	No	
73h	R	MCHP Test Register		RES	RES	RES	RES	TST3	TST2	TST1	TST0	09h	No	
74h	R/W	MCHP Test Register		RES	RES	RES	RES	TST3	TST2	TST1	TST0	09h	Yes	
75h	R	MCHP Test Register		RES	RES	RES	RES	TST3	TST2	TST1	TST0	09h	No	
76h	R/W	MCHP Test Register		RES	RES	RES	RES	TST3	TST2	TST1	TST0	09h	Yes	
77h	R	MCHP Test Register		RES	RES	RES	RES	TST3	TST2	TST1	TST0	09h	No	
78h	R/W	MCHP Test Register		RES	RES	RES	RES	TST3	TST2	TST1	TST0	09h	Yes	
79h	R/W	MCHP Test Register		TST7	TST6	TST5	TST4	TST3	TST2	TST1	TST0	00h	Yes	
7Ah	R	Reserved		RES	RES	RES	RES	RES	RES	RES	RES	00h	No	
7Bh	R	Reserved		RES	RES	RES	RES	RES	RES	RES	RES	00h	No	
7Ch	R/W Note 2 2-4	Special Function Register		AVG2	AVG1	AVG0	MCHP Note 2 2-6	MCHP Note 2 2-6	INTEN	MON-MD	RES	40h	Yes Note 2 2-4	
7Dh	R	Reserved		RES	RES	RES	RES	RES	RES	RES	RES	00h	No	
7Eh	R/W	Interrupt Enable Voltages		VCC	12V	5V	VTR	VCCP	2.5V	VBAT	VOLT	ECh	Yes	
7Fh	R/W	Configuration		INIT	MCHP Note 2 2-6	MCHP Note 2 2-6	SUREN	TRDY Note 2 2-9	MON_DN	RES	RES	14h	Yes	com-plete moni-tor cycle
80h	R/W	Interrupt Enable (Fan Tachs)		RES	RES	RES	RES	FAN-TACH3	FAN-TACH2	FAN-TACH1	FAN-TACH	0Eh	Yes	
81h	R/W	TACH_PWM Association		RES	RES	T3H	T3L	T2H	T2L	T1H	T1L	24h	Yes	
82h	R/W	Interrupt Enable (Temp)		RES	RES	RES	RES	D2EN	D1EN	AMB	TEMP	0Eh	Yes	
83h	RWC	Interrupt Status Register 3		RES	RES	RES	RES	RES	RES	VBAT	VTR	00h	No	
84h	R	A/D Converter LSbs Reg 5		VTR.3	VTR.2	VTR.1	VTR.0	VBAT.3	VBAT.2	VBAT.1	VBAT.0	00h	No	
85h	R	A/D Converter LSbs Reg 1		RD2.3	RD2.2	RD2.1	RD2.0	RD1.3	RD1.2	RD1.1	RD1.0	00h	No	
86h	R	A/D Converter LSbs Reg 2		V12.3	V12.2	V12.1	V12.0	AM.3	AM.2	AM.1	AM.0	00h	No	
87h	R	A/D Converter LSbs Reg 3		V50.3	V50.2	V50.1	V50.0	V25.3	V25.2	V25.1	V25.0	00h	No	
88h	R	A/D Converter LSbs Reg 4		VCC.3	VCC.2	VCC.1	VCC.0	VCP.3	VCP.2	VCP.1	VCP.0	00h	No	
89h	R	Reserved		RES	RES	RES	RES	RES	RES	RES	RES	00h	No	
8Ah	R	MCHP Test Register		RES	TST6	TST5	TST4	TST3	TST2	TST1	TST0	4Dh	No	
8Bh	R/W	MCHP Test Register		RES	TST6	TST5	TST4	TST3	TST2	TST1	TST0	4Dh	Yes	
8Ch	R	MCHP Test Register		RES	RES	RES	TST4	TST3	TST2	TST1	TST0	09h	No	
8Dh	R/W	MCHP Test Register		RES	RES	RES	TST4	TST3	TST2	TST1	TST0	09h	Yes	
8Eh	R	MCHP Test Register		TST7	TST6	TST5	TST4	TST3	TST2	TST1	TST0	N/A	No	
8Fh	R	Reserved		RES	RES	RES	RES	RES	RES	RES	RES	00h	No	
90h	R/W	FANTACH1 Option		MCHP	MCHP	MCHP	3EDG	MODE	EDG1	EDG0	SLOW	04h	No	
91h	R/W	FANTACH2 Option		MCHP	MCHP	MCHP	3EDG	MODE	EDG1	EDG0	SLOW	04h	No	
92h	R/W	FANTACH3 Option		MCHP	MCHP	MCHP	3EDG	MODE	EDG1	EDG0	SLOW	04h	No	
93h	R	Reserved		RES	RES	RES	RES	RES	RES	RES	RES	00h	No	
94h	R/W	PWM1 Option		RES Note 2 2-5	RES Note 2 2-5	OPP	GRD1	GRD0	SZEN	UPDT1	UPDT0	0Ch	No	
95h	R/W	PWM2 Option		RES Note 2 2-5	RES Note 2 2-5	OPP	GRD1	GRD0	SZEN	UPDT1	UPDT0	0Ch	No	
96h	R/W	PWM3 Option		RES Note 2 2-5	RES Note 2 2-5	OPP	GRD1	GRD0	SZEN	UPDT1	UPDT0	0Ch	No	
97h	R/W	MCHP Test Register		TST7	TST 6	TST 5	TST 4	TST3	TST2	TST1	TST0	5Ah	Yes	
98h	R	MCHP Test Register		TST7	TST 6	TST 5	TST 4	TST3	TST2	TST1	TST0	F1h	Yes	
99h	R	VTR Reading		7	6	5	4	3	2	1	0	00h	No	
9Ah	R	VBAT Reading		7	6	5	4	3	2	1	0	00h	No	
9Bh	R	VTR Limit Low		7	6	5	4	3	2	1	0	00h	No	

TABLE 22-1: REGISTER SUMMARY (CONTINUED)

Reg Addr	Read/ Write	Reg Name		Bit 7 MSb	Bit 6	Bit 5	Bit 4	Bit 3	Bit 2	Bit 1	Bit 0 LSb	Default Value	Lock	
9Ch	R/W	VTR Limit Hi		7	6	5	4	3	2	1	0	FFh	No	
9Dh	R/W	VBAT Limit Low										00h	No	
9Eh	R/W	VBAT Limit Hi		7	6	5	4	3	2	1	0	FFh	No	
9Fh	R	Reserved		RES	RES	RES	RES	RES	RES	RES	RES	00h	No	
A0h	R	Reserved		RES	RES	RES	RES	RES	RES	RES	RES	00h	No	
A1h	R	Reserved		RES	RES	RES	RES	RES	RES	RES	RES	00h	No	
A2h	R	Reserved		RES	RES	RES	RES	RES	RES	RES	RES	00h	No	
A3h	R/W	MCHP Test Register		TST7	TST6	TST5	TST4	TST3	TST2	TST1	TST0	00h N/A	Yes	
A4h	R	MCHP Test Register		TST7	TST6	TST5	TST4	TST3	TST2	TST1	TST0	02h	No	
A5h	R/WC	Interrupt Status 1 Secondary		INT23	D2	AMB	D1	5V	VCC	Vccp	2.5V	00h Note 22-8	No	
A6h	R/WC	Interrupt Status 2 Secondary		ERR2	ERR1	RES	FAN-TACH3	FAN-TACH2	FAN-TACH1	RES	12V	00h Note 22-8	No	
A7h	RWC	Interrupt Status 3 Secondary	INS3	RES	RES	RES	RES	RES	RES	VBAT	VTR	00h	No	
A8h	R	Reserved		RES	RES	RES	RES	RES	RES	RES	RES	00h	No	
A9h	R/W	MCHP Test Register		7	6	5	4	3	2	1	0	00h	Yes	
AAh	R/W	MCHP Test Register		7	6	5	4	3	2	1	0	00h	Yes	
ABh	R/W	Tach 1-3 Mode		T1M1	T1M0	T2M1	T2M0	T3M1	T3M0	RES	RES	00h	No	
ACh	R	Reserved		RES	RES	RES	RES	RES	RES	RES	RES	00h	No	
ADh	R	MCHP Test Register		7	6	5	4	3	2	1	0	00h	No	
AEh	R/W	Top Temperature Remote Diode 1 (Zone 1)		7	6	5	4	3	2	1	0	2Dh Note 22-8	Yes	
AFh	R/W	Top Temperature Remote Diode 2 (Zone 3)		7	6	5	4	3	2	1	0	2Dh Note 22-8	Yes	
B0h	R	MCHP Test Register		RES	RES	RES	RES	RES	RES	RES	RES	00h	No	
B1h	R	MCHP Test Register		RES	RES	RES	RES	RES	RES	RES	RES	00h	No	
B2h	R	MCHP Test Register		RES	RES	RES	RES	RES	RES	RES	RES	00h	No	
B3h	R/W	Top Temperature Ambient (Zone 2)		7	6	5	4	3	2	1	0	2Dh Note 22-8	Yes	
B4h	R/W	Min Temp Adjust Temp RD1, RD2		R1ATP1	R1ATP0	R2ATP1	R2ATP0	RES	RES	RES	RES	00h	Yes	
B5h	R/W	Min Temp Adjust Temp and Delay Amb		RES	RES	AMATP1	AMATP0	RES	RES	AMAD1	AMAD0	00h	Yes	
B6h	R/W	Min Temp Adjust Delay 1-2		R1AD1	R1AD0	R2AD1	R2AD0	RES	RES	RES	RES	00h	Yes	
B7h	R/W	Tmin Adjust Enable		RES	RES	RES	RES	TMIN_ADJ_EN2	TMIN_ADJ_EN1	TMIN_ADJ_ENA	TOP_INT_EN	00h	Yes	
B8h	R/WC	Top Temp Exceeded Status		RES	RES	RES	RES	RES	STS2	STS1	STSA	00h Note 22-8	No	
B9h	R	Reserved		RES	RES	RES	RES	RES	RES	RES	RES	00h	No	
BAh	R/W	MCHP Reserved		RES	RES	RES	RES	RES	RES	RES	RES	04h	Yes	
BBh	R	MCHP Reserved		7	6	5	4	3	2	1	0	00h	No	
BCh	R	Reserved		RES	RES	RES	RES	RES	RES	RES	RES	00h	No	
BDh	R	MCHP Reserved		7	6	5	4	3	2	1	0	00h	No	
BEh	R	Reserved		RES	RES	RES	RES	RES	RES	RES	RES	00h	No	
BFh	R/W	MCHP Reserved		RES	RES	RES	RES	RES	RES	RES	RES	00h	Yes	
C0h	R/W	MCHP Reserved		RES	RES	RES	RES	RES	RES	RES	RES	00h	Yes	
C1h	R/W	Thermtrip Control		RES	RES	RES	RES	RES	RES	RES	THER-MTRIP_CTRL	01h	Yes	
C2h	R	Reserved		RES	RES	RES	RES	RES	RES	RES	RES	00h	No	
C3h	R	Reserved		RES	RES	RES	RES	RES	RES	RES	RES	00h	No	
C4h	R/W	ThermTrip Temp Limit RD1 (Zone 1)		7	6	5	4	3	2	1	0	7Fh	Yes	
C5h	R/W	ThermTrip Temp Limit RD2 (Zone 3)		7	6	5	4	3	2	1	0	7Fh	Yes	
C6h	R	Reserved		RES	RES	RES	RES	RES	RES	RES	RES	00h	No	

© 2016-2017 Microchip Technology Inc.

TABLE 22-1: REGISTER SUMMARY (CONTINUED)

Reg Addr	Read/ Write	Reg Name		Bit 7 MSb	Bit 6	Bit 5	Bit 4	Bit 3	Bit 2	Bit 1	Bit 0 LSb	Default Value	Lock	
C7h	R	Reserved		RES	RES	RES	RES	RES	RES	RES	RES	00h	No	
C8h	R	Reserved		RES	RES	RES	RES	RES	RES	RES	RES	00h	No	
C9h	R/W	ThermTrip Temp Limit Amb (Zone 2)		7	6	5	4	3	2	1	0	7Fh	Yes	
CAh	R/WC	ThermTrip Status		RES	RES	RES	RES	RES	RD 2	RD 1	AMB	00h Note 22-8	No	
CBh	R/W	ThermTrip Output Enable		RES	RES	RES	RES	RES	RD 2	RD 1	AMB	00h	Yes	
CCh	R	Reserved		RES	RES	RES	RES	RES	RES	RES	RES	00h	No	
CDh	R	Reserved		RES	RES	RES	RES	RES	RES	RES	RES	00h	No	
CEh	R/W	MCHP Reserved		RES	RES	RES	RES	RES	RES	RES	RES	00h	Yes	
CF-D0h	R/w	MCHP Test Register		TST7	TST6	TST5	TST4	TST3	TST2	TST1	TST0	00h	No	
D1h	R/W	PWM1 Max		7	6	5	4	3	2	1	0	FFh	Yes	
D2h-D5h	R	Reserved		RES	RES	RES	RES	RES	RES	RES	RES	00h	No	
D6h	R/W	PWM2 Max		7	6	5	4	3	2	1	0	FFh	Yes	
D7h-DAh	R	Reserved		RES	RES	RES	RES	RES	RES	RES	RES	00h	No	
DBh	R/W	PWM3 Max		7	6	5	4	3	2	1	0	FFh	Yes	
DCh-DFh	R	Reserved		RES	RES	RES	RES	RES	RES	RES	RES	00h	No	
E0h	R/W	Enable LSbs for AutoFan		RES	RES	PWM3_n1	PWM3_n0	PWM2_n1	PWM2_n0	PWM1_n1	PWM1_n0	00h	No	
E1-E8h	R	Reserved		RES	RES	RES	RES	RES	RES	RES	RES	00h	No	
E9h	R/W	MCHP Reserved		7	6	5	4	3	2	1	0	00h	Yes	
EAh	R	MCHP Reserved		7	6	5	4	3	2	1	0	00h	No	
EBh	R	MCHP Reserved		7	6	5	4	3	2	1	0	00h	No	
ECh	R/W	MCHP Reserved		7	6	5	4	3	2	1	0	00h	Yes	
EDh	R/W	MCHP Reserved		7	6	5	4	3	2	1	0	00h	Yes	
EEh	R/W	MCHP Reserved		RES	RES	RES	RES	RES	RES	RES	RES	00h	Yes	
FFh	R	MCHP Test Register		TST7	TST 6	TST 5	TST 4	TST3	TST2	TST1	TST0	N/A	No	

Note: MCHP Test Registers may be read/write registers. Writing these registers can cause unwanted results.

Note 22-1 The PWMx Current Duty Cycle Registers are only writable when the associated fan is in manual mode. In this case, the register is writable when the start bit is set, but not when the lock bit is set.

Note 22-2 The Lock and Start bits in the Ready/Lock/Start register are locked by the Lock Bit. The OVRID bit is always writable when the lock bit is set.

Note 22-3 The Interrupt status register bits are cleared on a write of 1 if the corresponding event is not active.

Note 22-4 The INTEN bit in register 7Ch is always writable, both when the start bit is set and when the lock bit is set.

Note 22-5 These Reserved bits are read/write bits. Writing these bits to a ‘1’ has no effect on the hardware.

Note 22-6 MCHP bits may be read/write bits. Writing these bits to a value other than the default value may cause unwanted results

Note 22-7 RES1 bits are defined as reads return 1, writes are ignored.

Note 22-8 This register is reset to its default value when the PWRGD_PS signal transitions high.

Note 22-9 This bit is reset to its default value when the PWRGD_PS signal transitions high.

Note 22-10 This register always reflects the state of the pin, unless it is in spinup. During spinup this register is forced to 00h.

22.1 Undefined Registers

The registers shown in the table above are the defined registers in the part. Any reads to undefined registers always return 00h. Writes to undefined registers have no effect and do not return an error.

22.2 Defined Registers

22.2.1 REGISTER 10H: MCHP TEST REGISTER

Register Address	Read/ Write	Register Name	Bit 7 (MSb)	Bit 6	Bit 5	Bit 4	Bit 3	Bit 2	Bit 1	Bit 0 (LSb)	Default Value
10h	R/W	MCHP TEST	TST7	TST6	TST5	TST4	TST3	TST2	TST1	TST0	00h

Setting the Lock bit has no effect on this registers

This register must not be written. Writing this register may produce unexpected results.

22.2.2 REGISTERS 20-24H, 99-9AH: VOLTAGE READING

Register Address	Read/ Write	Register Name	Bit 7 (MSb)	Bit 6	Bit 5	Bit 4	Bit 3	Bit 2	Bit 1	Bit 0 (LSb)	Default Value
20h	R	2.5V Reading	7	6	5	4	3	2	1	0	N/A
21h	R	Vccp Reading	7	6	5	4	3	2	1	0	N/A
22h	R	VCC Reading	7	6	5	4	3	2	1	0	N/A
23h	R	+5V Reading	7	6	5	4	3	2	1	0	N/A
24h	R	+12V Reading	7	6	5	4	3	2	1	0	N/A
99h	R	VTR Reading	7	6	5	4	3	2	1	0	N/A
9Ah	R	Vbat Reading	7	6	5	4	3	2	1	0	N/A

The Voltage Reading registers reflect the current voltage of the voltage monitoring inputs. Voltages are presented in the registers at ¾ full scale for the nominal voltage, meaning that at nominal voltage, each register will read C0h, except for the Vbat input. Vbat is nominally a 3.0V input that is implemented on a +3.3V (nominal) analog input. Therefore, the nominal reading for Vbat is AEh.

Note: Vbat will only be monitored when the Vbat Monitoring Enable bit is set to ‘1’. Updating the Vbat register automatically clears the Vbat Monitoring Enable bit.

TABLE 22-2: VOLTAGE VS. REGISTER READING

Input	Nominal Voltage	Register Reading at Nominal Voltage	Maximum Voltage	Register Reading at Maximum Voltage	Minimum Voltage	Register Reading at Minimum Voltage
VTR	3.3V	C0h	4.38V	FFh	0V	00h
Vbat (Note 22-11)	3.0V	AEh	4.38V	FFh	0V	00h
5.0V	5.0V	C0h	6.64V	FFh	0V	00h
Vccp	1.5V	C0h	2.00V	FFh	0V	00h
VCC	3.3V	C0h	4.38V	FFh	0V	00h
2.5V	2.5V	C0h	3.32V	FFh	0V	00h
12V	12.0V	C0h	16.00V	FFh	0V	00h

Note 22-11 Vbat is a nominal 3.0V input source that has been implemented on a 3.3V analog voltage monitoring input.

The Voltage Reading registers will be updated automatically by the device with a minimum frequency of 4Hz if the average bits located in the Special Function register at offset 7Ch are set to 001. These registers are read only – a write to these registers has no effect.

© 2016-2017 Microchip Technology Inc.

22.2.3 REGISTERS 25-27H: TEMPERATURE READING

Register Address	Read/ Write	Register Name	Bit 7 (MSb)	Bit 6	Bit 5	Bit 4	Bit 3	Bit 2	Bit 1	Bit 0 (LSb)	Default Value
25h	R	Remote Diode 1 (Zone 1) Temp Reading	7	6	5	4	3	2	1	0	N/A
26h	R	Internal Diode (Zone 2) Temp Reading	7	6	5	4	3	2	1	0	N/A
27h	R	Remote Diode 2 (Zone 3) Temp Reading	7	6	5	4	3	2	1	0	N/A

The Temperature Reading registers reflect the current temperatures of the internal and remote diodes. Remote Diode 1 Temp Reading register reports the temperature measured by the Remote1- and Remote1+ pins, Remote Diode 2 Temp Reading register reports the temperature measured by the Remote2- and Remote2+ pins, and the Internal Diode Temp Reading register reports the temperature measured by the internal (ambient) temperature sensor. Current temperatures are represented as 12 bit, 2's complement, signed numbers in Celsius. The 8MSbs are accessible in the temperature reading registers. Table 22-3 shows the conversion for the 8-bit reading value shown in these registers. The extended precision bits for these readings are accessible in the A/D Converter LSBs Register (85h-86h). The Temperature Reading register will return a value of 80h if the remote diode pins are not implemented by the board designer or are not functioning properly (this corresponds to the diode fault interrupt status bits). The Temperature Reading registers will be updated automatically by the SCH322x Chip with a minimum frequency of 4Hz.

Note: These registers are read only – a write to these registers has no effect.

Each of the temperature reading registers are mapped to a zone. Each PWM may be programmed to operate in the auto fan control operating mode by associating a PWM with one or more zones. The following is a list of the zone associations.

- Zone 1 is controlled by Remote Diode 1 Temp Reading
- Zone 2 is controlled by Internal Temp Reading (Ambient Temperature Sensor)
- Zone 3 is controlled by Remote Diode 2 Temp Reading

Note: To read a 12-bit reading value, software must read in the order of MSB then LSB. If several readings are being read at the same time, software can read all the MSB registers then the corresponding LSB registers. For example: Read RD1 Reading, RD2 Reading, then A/D Converter LSbs Reg1, which contains the LSbs for RD1 and RD2.

TABLE 22-3: TEMPERATURE VS. REGISTER READING

Temperature	Reading (DEC)	Reading (HEX)
-127°c	-127	81h
. . .	. . .	. . .
-50°c	-50	CEh
. . .	. . .	. . .
0°c	0	00h
. . .	. . .	. . .
50°c	50	32h
. . .	. . .	. . .
127°c	127	7Fh
(SENSOR ERROR)		80h

22.2.4 REGISTERS 28-2DH: FAN TACHOMETER READING

Register Address	Read/ Write	Register Name	Bit 7 (MSb)	Bit 6	Bit 5	Bit 4	Bit 3	Bit 2	Bit 1	Bit 0 (LSb)	Default Value
28h	R	FANTACH1 LSB	7	6	5	4	3	2	1	0	FFh
29h	R	FANTACH1 MSB	15	14	13	12	11	10	9	8	FFh
2Ah	R	FANTACH2 LSB	7	6	5	4	3	2	1	0	FFh
2Bh	R	FANTACH2 MSB	15	14	13	12	11	10	9	8	FFh
2Ch	R	FANTACH3 LSB	7	6	5	4	3	2	1	0	FFh
2Dh	R	FANTACH3 MSB	15	14	13	12	11	10	9	8	FFh

This register is reset to its default value when PWRGD_PS is asserted.

The Fan Tachometer Reading registers contain the number of 11.111µs periods (90KHz) between full fan revolutions. Fans produce two tachometer pulses per full revolution. These registers are updated at least once every second.

This value is represented for each fan in a 16 bit, unsigned number.

The Fan Tachometer Reading registers always return an accurate fan tachometer measurement, even when a fan is disabled or non-functional, including when the start bit=0.

When one byte of a 16-bit register is read, the other byte latches the current value until it is read, in order to ensure a valid reading. The order is LSB first, MSB second.

FFFFh indicates that the fan is not spinning, or the tachometer input is not connected to a valid signal (This could be triggered by a counter overflow).

These registers are read only – a write to these registers has no effect.

22.2.5 REGISTERS 30-32H: CURRENT PWM DUTY

Register Address	Read/ Write	Register Name	Bit 7 (MSb)	Bit 6	Bit 5	Bit 4	Bit 3	Bit 2	Bit 1	Bit 0 (LSb)	Default Value
30h	R/W (Note 22-12)	PWM1 Current Duty Cycle	7	6	5	4	3	2	1	0	N/A
31h	R/W (Note 22-12)	PWM2 Current Duty Cycle	7	6	5	4	3	2	1	0	N/A
32h	R/W (Note 22-12)	PWM3 Current Duty Cycle	7	6	5	4	3	2	1	0	N/A

Note 22-12 These registers are only writable when the associated fan is in manual mode. These registers become read only when the Lock bit is set. Any further attempts to write to these registers shall have no effect.

The Current PWM Duty registers store the duty cycle that the chip is currently driving the PWM signals at. At initial power-on, the duty cycle is 100% and thus, when read, this register will return FFh. After the Ready/Lock/Start Register Start bit is set, this register and the PWM signals are updated based on the algorithm described in the Auto Fan Control Operating Mode section and the Ramp Rate Control logic, unless the associated fan is in manual mode – see below.

Note: When the device is configured for Manual Mode, the Ramp Rate Control logic should be disabled.

When read, the Current PWM Duty registers return the current PWM duty cycle for the respective PWM signal.

These registers are read only – a write to these registers has no effect.

Note: If the current PWM duty cycle registers are written while the part is not in manual mode or when the start bit is zero, the data will be stored in internal registers that will only be active and observable when the start bit is set and the fan is configured for manual mode. While the part is not in manual mode and the start bit is zero, the current PWM duty cycle registers will read back FFh.

© 2016-2017 Microchip Technology Inc.

Manual Mode (Test Mode)

In manual mode, when the start bit is set to 1 and the lock bit is 0, the current duty cycle registers are writeable to control the PWMs.

Note:	When the lock bit is set to 1, the current duty cycle registers are Read-Only.

The PWM duty cycle is represented as follows:

TABLE 22-4: PWM DUTY VS REGISTER READING

Current Duty	Value (Decimal)	Value (HEX)
0%	0	00h
⋮	⋮	⋮
25%	64	40h
⋮	⋮	⋮
50%	128	80h
⋮	⋮	⋮
100%	255	FFh

During spin-up, the PWM duty cycle is reported as 0%.

Note 1: The PWMx Current Duty Cycle always reflects the current duty cycle on the associated PWM pin.

2: The PWMx Current Duty Cycle register is implemented as two separate registers: a read-only and a write-only. When a value is written to this register in manual mode there will be a delay before the programmed value can be read back by software. The hardware updates the read-only PWMx Current Duty Cycle register on the beginning of a PWM cycle. If Ramp Rate Control is disabled, the delay to read back the programmed value will be from 0 seconds to 1/(PWM frequency) seconds. Typically, the delay will be 1/(2*PWM frequency) seconds.

22.2.6 REGISTER 3DH: DEVICE ID

Register Address	Read/ Write	Register Name	Bit 7 (MSb)	Bit 6	Bit 5	Bit 4	Bit 3	Bit 2	Bit 1	Bit 0 (LSb)	Default Value
3Dh	R	Device ID	7	6	5	4	3	2	1	0	8Ch

The Device ID register contains a unique value to allow software to identify which device has been implemented in a given system.

22.2.7 REGISTER 3EH: COMPANY ID

Register Address	Read/ Write	Register Name	Bit 7 (MSb)	Bit 6	Bit 5	Bit 4	Bit 3	Bit 2	Bit 1	Bit 0 (LSb)	Default Value
3Eh	R	Company ID	7	6	5	4	3	2	1	0	5Ch

The company ID register contains a unique value to allow software to identify Microchip devices that been implemented in a given system.

22.2.8 REGISTER 3FH: REVISION

Register Address	Read/ Write	Register Name	Bit 7 (MSb)	Bit 6	Bit 5	Bit 4	Bit 3	Bit 2	Bit 1	Bit 0 (LSb)	Default Value
3Fh	R	Revision	7	6	5	4	3	2	1	0	01h

The Revision register contains the current version of this device.

The register is used by application software to identify which version of the device has been implemented in the given system. Based on this information, software can determine which registers to read from and write to. Further, application software may use the current stepping to implement work-arounds for bugs found in a specific silicon stepping.

This register is read only – a write to this register has no effect.

22.2.9 REGISTER 40H: READY/LOCK/START MONITORING

Register Address	Read/ Write	Register Name	Bit 7 (MSb)	Bit 6	Bit 5	Bit 4	Bit 3	Bit 2	Bit 1	Bit 0 (LSb)	Default Value
40h	R/W	Ready/Lock/Start	RES	RES	RES	RES	OVRID	READY	LOCK Note 22-13	START	04h

Note 22-13 This LOCK bit is cleared when PWRGD_PS is asserted.

Setting the Lock bit makes the Lock and Start bits read-only.

Bit	Name	R/W	Default	Description
0	START	R/W	0	When software writes a 1 to this bit, the SCH322x enables monitoring and PWM output control functions based on the limit and parameter registers. Before this bit is set, the part does not update register values. Whenever this bit is set to 0, the monitoring and PWM output control functions are based on the default limits and parameters, regardless of the current values in the limit and parameter registers. The SCH322x preserves the values currently stored in the limit and parameter registers when this bit is set or cleared. This bit becomes read only when the Lock bit is set. **Note 1:** When this bit is 0, all fans are on full 100% duty cycle, i.e., PWM pins are high for 255 clocks, low for 1 clock. When this bit is 0, the part is not monitoring. **2:** It is suggested that software clear the START bit and exit auto fan control mode before modifying any fan configuration registers. After clearing the START bit, software should wait for a period of one 90kHz-10% clock (~12.5usec) before setting the START bit back to ‘1’ to ensure the fan logic exited auto mode when START was cleared.
1	LOCK	R/W Note 22-14	0	Setting this bit to 1 locks specified limit and parameter registers. Once this bit is set, limit and parameter registers become read only and will remain locked until the device is powered off. This register bit becomes read only once it is set.
2	READY	R	0	The SCH322x sets this bit automatically after the part is fully powered up, has completed the power-up-reset process, and after all A/D converters are functioning (all bias conditions for the A/Ds have stabilized and the A/Ds are in operational mode). (Always reads back ‘1’.)
3	OVRID	R/W	0	If this bit is set to 1, all PWM outputs go to 100% duty cycle regardless of whether or not the lock bit is set.
4	VBAT Mon	R/W	0	The Vbat Monitoring Enable bit determines if Vbat will be monitored on the next available monitoring cycle. This is a read/write bit. Writing this bit to a ‘1’ will enable the Vbat input to be monitored on the next available monitoring cycle. Writing this bit to a ‘0’ has no effect. This bit is cleared on an HVTR POR or when the Vbat register is updated. Software can poll this bit for a ‘0’ after setting it to a ‘1’ to determine when the Vbat register has been updated. 0 = Vbat input is not being monitored (default) 1 = Vbat input is being monitored **Note:** The lock bit has no effect on this register bit.
5-7	Reserved	R	0	Reserved

Note 22-14 This bit is set by software and cleared by hardware. Writing a ‘0’ to this register has no effect.

© 2016-2017 Microchip Technology Inc.

Note 22-15 There is a start-up time of up to 301.5ms (default - see Table 21-2, “ADC Conversion Sequence,” on page 126) for monitoring after the start bit is set to ‘1’, during which time the reading registers are not valid. Software can poll the TRDY bit located in the Configuration Register (7Fh) to determine when the voltage and temperature readings are valid.The following summarizes the operation of the part based on the Start bit:

1. If Start bit = '0' then:
   a) Fans are set to Full On.
   b) No temperature or fan tach monitoring is performed. The values in the reading registers will be N/A (Not Applicable), which means these values will not be considered valid readings until the Start bit = '1'. The exception to this is the Tachometer reading registers, which always give the actual reading on the TACH pins.
   c) No Status bits are set.
2. If Start bit = '1'
   a) All fan control and monitoring will be based on the current values in the registers. There is no need to preserve the default values after software has programmed these registers because no monitoring or auto fan control will be done when Start bit = '0'.
   b) Status bits may be set.

Note: Once programmed, the register values will be saved when start bit is reset to ‘0’.

22.2.10 REGISTER 41H: INTERRUPT STATUS REGISTER 1

Register Address	Read/ Write	Register Name	Bit 7 (MSb)	Bit 6	Bit 5	Bit 4	Bit 3	Bit 2	Bit 1	Bit 0 (LSb)	Default Value
41h	R/WC	Interrupt Status 1	INT2 Note 22-16	D2	AMB	D1	5V	VCC	Vccp	2.5V	00h

Note 22-16 This is a read-only bit. Writing ‘1’ to this bit has no effect.

Note 1: This register is reset to its default value when the PWRGD_PS signal transitions high.

2: The is a read/write-to-clear register. Bits[6:4] are cleared on a write of one if the temperature event is no longer active. Writing a zero to these bits has no effect.

Bit[7] INT2

This bit indicates that a status bit is set in the Interrupt Status Register 2 Register. Therefore, S/W can poll this register, and only if bit 7 is set does the other registers need to be read. This bit is cleared (set to 0) automatically by the device if there are no bits set in the Interrupt Status Register 2.

Bits[6:0] Individual Status Bits

Bits[6:0] of the Interrupt Status Register 1 are automatically set by the device whenever the measured temperature on Remote Diode 1, Internal Diode, or the Remote Diode 2 Temperature violates the limits set in the corresponding temperature limit registers. These individual status bits remain set until the bit is written to one by software or until the individual enable bit is cleared, even if the temperatures no longer violate the limits set in the limit registers.

- Clearing the status bits by a write of ‘1’
  - The voltage status bits are cleared (set to 0) automatically by the SCH322x after they are written to one by software, if the voltage readings no longer violate the limit set in the limit registers. See Registers 44-4Dh, 9B-9Eh: Voltage Limit Registers on page 169.
  - The temperature status bits are cleared (set to 0) automatically by the SCH322x after they are written to one by software, if the temperature readings no longer violate the limit set in the limit registers. See Registers 4E-53h: Temperature Limit Registers on page 170.
- Clearing the status bits by clearing the individual enable bits.
  - Clearing or setting the individual enable bits does not take effect unless the START bit is 1. No interrupt status events can be generated when START=0 or when the individual enable bit is cleared. If the status bit is one and the START bit is one then clearing the individual enable bit will immediately clear the status bit. If the status bit is one and the START bit is zero then clearing the individual enable bit will have no effect on the status bit until the START bit is set to one. Setting the START bit to one when the individual enable bit is zero will

clear the status bit. Setting or clearing the START bit when the individual enable bit is one has no effect on the status bits.

Note 1: The individual enable bits for D2, AMB, and D1 are located in the Interrupt Enable 3 (Temp) register at offset 82h.

2: Clearing the group Temp enable bit or the global INTEN enable bit has no effect on the status bits.

Bit	Name	R/W	Default	Description
0	2.5V_Error	R/WC	0	The SCH322x automatically sets this bit to 1 when the 2.5V input voltage is less than or equal to the limit set in the 2.5V Low Limit register or greater than the limit set in the 2.5V High Limit register.
1	Vccp_Error	R/WC	0	The SCH322x automatically sets this bit to 1 when the Vccp input voltage is less than or equal to the limit set in the Vccp Low Limit register or greater than the limit set in the Vccp High Limit register.
2	VCC_Error	R/WC	0	The SCH322x automatically sets this bit to 1 when the VCC input voltage is less than or equal to the limit set in the VCC Low Limit register or greater than the limit set in the VCC High Limit register.
3	5V_Error	R/WC	0	The SCH322x automatically sets this bit to 1 when the 5V input voltage is less than or equal to the limit set in the 5V Low Limit register or greater than the limit set in the 5V High Limit register.
4	Remote Diode 1 Limit Error	R/WC	0	The SCH322x automatically sets this bit to 1 when the temperature input measured by the Remote1- and Remote1+ is less than or equal to the limit set in the Remote Diode 1 Low Temp register or greater than the limit set in Remote Diode 1 High Temp register.
5	Internal Sensor Limit Error	R/WC	0	The SCH322x automatically sets this bit to 1 when the temperature input measured by the internal temperature sensor is less than or equal to the limit set in the Internal Low Temp register or greater than the limit set in the Internal High Temp register.
6	Remote Diode 2 Limit Error	R/WC	0	The SCH322x automatically sets this bit to 1 when the temperature input measured by the Remote2- and Remote2+ is less than or equal to the limit set in the Remote Diode 2 Low Temp register or greater than the limit set in the Remote Diode 1 High Temp register.
7	INT2 Event Active	R/WC	0	The device automatically sets this bit to 1 when a status bit is set in the Interrupt Status Register 2.

22.2.11 REGISTER 42H: INTERRUPT STATUS REGISTER 2

Register Address	Read/ Write	Register Name	Bit 7 (MSb)	Bit 6	Bit 5	Bit 4	Bit 3	Bit 2	Bit 1	Bit 0 (LSb)	Default Value
42h	R/WC	Interrupt Status Register 2	ERR2	ERR1	RES	FAN-TACH3	FAN-TACH2	FAN-TACH1	RES	12V	00h

Note 1: This register is reset to its default value when the PWRGD_PS signal transitions high.

2: This is a read/write-to-clear register. The status bits are cleared on a write of one if the event causing the interrupt is no longer active. Writing a zero to these bits has no effect.

The Interrupt Status Register 2 bits is automatically set by the device whenever a tach reading value is above the minimum value set in the tachometer minimum registers or when a remote diode fault occurs. When a remote diode fault occurs (if the start bit is set) 80h will be loaded into the associated temperature reading register, which causes the associated diode limit error bit to be set (see Register 41h: Interrupt Status Register 1 on page 167) in addition to the diode fault bit (ERRx). These individual status bits remain set until the bit is written to one by software or until the individual enable bit is cleared, even if the event no longer persists.

- Clearing the status bits by a write of ‘1’
  - The FANTACHx status bits are cleared (set to 0) automatically by the SCH322x after they are written to one by software, if the FANTACHx reading register no longer violates the programmed FANTACH Limit. (See Registers 28-2Dh: Fan Tachometer Reading on page 164 and Registers 54-59h: Fan Tachometer Low Limit on page 171)

© 2016-2017 Microchip Technology Inc.

- The ERRx status bits are cleared (set to 0) automatically by the SCH322x after they are written to one by software, if the Diode Fault condition no longer exists. The remote diode fault bits do not get cleared while the fault condition exists.

• Clearing the status bits by clearing the individual enable bits.

- Clearing or setting the individual enable bits does not take effect unless the START bit is 1. No interrupt status events can be generated when START=0 or when the individual enable bit is cleared. If the status bit is one and the START bit is one then clearing the individual enable bit will immediately clear the status bit. If the status bit is one and the START bit is zero then clearing the individual enable bit will have no effect on the status bit until the START bit is set to one. Setting the START bit to one when the individual enable bit is zero will clear the status bit. Setting or clearing the START bit when the individual enable bit is one has no effect on the status bits.

Note 1: The individual enable bits for FANTACH[1:3] are located in Register 80h: Interrupt Enable 2 Register on page 181. The ERRx bits are enabled by the Remote Diode Limit error bits located in Register 82h: Interrupt Enable 3 Register on page 182

2: Clearing the group FANTACH or Temp enable bits or the global INTEN enable bit has no effect on the status bits.

Bit	Name	R/W	Default	Description
0	+12v_Error	R	0	The SCH322x automatically sets this bit to 1 when the 12V input voltage is less than or equal to the limit set in the 12V Low Limit register or greater than the limit set in the 12V High Limit register.
1	Reserved	R	0	Reserved
2	FANTACH1 Slow/Stalled	R/WC	0	The SCH322x automatically sets this bit to 1 when the FANTACH1 input reading is above the value set in the Tach1 Minimum MSB and LSB registers.
3	FANTACH2 Slow/Stalled	R/WC	0	The SCH322x automatically sets this bit to 1 when the FANTACH2 input reading is above the value set in the Tach2 Minimum MSB and LSB registers.
4	FANTACH3 Slow/Stalled	R/WC	0	The SCH322x automatically sets this bit to 1 when the FANTACH3 input reading is above the value set in the Tach3 Minimum MSB and LSB registers.
5	Reserved	R	0	Reserved
6	Remote Diode 1 Fault	R/WC	0	The SCH322x automatically sets this bit to 1 when there is either a short or open circuit fault on the Remote1+ or Remote1- thermal diode input pins. If the START bit is set and a fault condition exists, the Remote Diode 1 reading register will be forced to 80h.
7	Remote Diode 2 Fault	R/WC	0	The SCH322x automatically sets this bit to 1 when there is either a short or open circuit fault on the Remote2+ or Remote2- thermal diode input pins. If the START bit is set and a fault condition exists, the Remote Diode 2 reading register will be forced to 80h.

22.2.12 REGISTERS 44-4DH, 9B-9EH: VOLTAGE LIMIT REGISTERS

Register Address	Read/ Write	Register Name	Bit 7 (MSb)	Bit 6	Bit 5	Bit 4	Bit 3	Bit 2	Bit 1	Bit 0 (LSb)	Default Value
44h	R/W	2.5V Low Limit	7	6	5	4	3	2	1	0	00h
45h	R/W	2.5V High Limit	7	6	5	4	3	2	1	0	FFh
46h	R/W	Vccp Low Limit	7	6	5	4	3	2	1	0	00h
47h	R/W	Vccp High Limit	7	6	5	4	3	2	1	0	FFh
48h	R/W	VCC Low Limit	7	6	5	4	3	2	1	0	00h
49h	R/W	VCC High Limit	7	6	5	4	3	2	1	0	FFh
4Ah	R/W	5V Low Limit	7	6	5	4	3	2	1	0	00h
4Bh	R/W	5V High Limit	7	6	5	4	3	2	1	0	FFh
4Ch	R/W	12V Low Limit	7	6	5	4	3	2	1	0	00h
4Dh	R/W	12V High Limit	7	6	5	4	3	2	1	0	FFh

© 2016-2017 Microchip Technology Inc.

Register Address	Read/ Write	Register Name	Bit 7 (MSb)	Bit 6	Bit 5	Bit 4	Bit 3	Bit 2	Bit 1	Bit 0 (LSb)	Default Value
9Bh	R/W	VTR Low Limit	7	6	5	4	3	2	1	0	00h
9Ch	R/W	VTR High Limit	7	6	5	4	3	2	1	0	FFh
9Dh	R/W	Vbat Low Limit	7	6	5	4	3	2	1	0	00h
9Eh	R/W	Vbat High Limit	7	6	5	4	3	2	1	0	FFh

Setting the Lock bit has no effect on these registers.

If a voltage input either exceeds the value set in the voltage high limit register or falls below or equals the value set in the voltage low limit register, the corresponding bit will be set automatically in the interrupt status registers (41-42h, 83h). Voltages are presented in the registers at ¾ full scale for the nominal voltage, meaning that at nominal voltage, each register will read C0h, except for the Vbat input. Vbat is nominally a 3.0V input that is implemented on a +3.3V (nominal) analog input. Therefore, the nominal reading for Vbat is AEh.

Note: Vbat will only be monitored when the Vbat Monitoring Enable bit is set to ‘1’. Updating the Vbat reading register automatically clears the Vbat Monitoring Enable bit.

TABLE 22-5: VOLTAGE LIMITS VS. REGISTER SETTING

Input	Nominal Voltage	Register Reading at Nominal Voltage	Maximum Voltage	Register Reading at Maximum Voltage	Minimum Voltage	Register Reading at Minimum Voltage
VTR	3.3V	C0h	4.38V	FFh	0V	00h
Vbat (Note 2 2-17)	3.0V	AEh	4.38V	FFh	0V	00h
2.5V	5.0V	C0h	6.64V	FFh	0V	00h
Vccp	2.25V	C0h	3.00V	FFh	0V	00h
VCC	3.3V	C0h	4.38V	FFh	0V	00h
5V	5.0V	C0h	6.64V	FFh	0V	00h
12V	12.0V	C0h	16.00V	FFh	0V	00h

Note 22-17 Vbat is a nominal 3.0V input source that has been implemented on a 3.3V analog voltage monitoring input.

22.2.13 REGISTERS 4E-53H: TEMPERATURE LIMIT REGISTERS

Register Address	Read/ Write	Register Name	Bit 7 (MSb)	Bit 6	Bit 5	Bit 4	Bit 3	Bit 2	Bit 1	Bit 0 (LSb)	Default Value
4Eh	R/W	Remote Diode 1 Low Temp	7	6	5	4	3	2	1	0	81h
4Fh	R/W	Remote Diode 1 High Temp	7	6	5	4	3	2	1	0	7Fh
50h	R/W	Ambient Low Temp	7	6	5	4	3	2	1	0	81h
51h	R/W	Ambient High Temp	7	6	5	4	3	2	1	0	7Fh
52h	R/W	Remote Diode 2 Low Temp	7	6	5	4	3	2	1	0	81h
53h	R/W	Remote Diode 2 High Temp	7	6	5	4	3	2	1	0	7Fh

Setting the Lock bit has no effect on these registers.

If an external temperature input or the internal temperature sensor either exceeds the value set in the high limit register or is less than or equal to the value set in the low limit register, the corresponding bit will be set automatically by the SCH322x in the Interrupt Status Register 1 (41h). For example, if the temperature reading from the Remote1- and Remote1+ inputs exceeds the Remote Diode 1 High Temp register limit setting, Bit[4] D1 of the Interrupt Status Register 1 will be set. The temperature limits in these registers are represented as 8 bit, 2’s complement, signed numbers in Celsius, as shown below in Table 22-6.

© 2016-2017 Microchip Technology Inc.

TABLE 22-6: TEMPERATURE LIMITS VS. REGISTER SETTINGS

Temperature	Limit (DEC)	Limit (HEX)
-127°c	-127	81h
. . .	. . .	. . .
-50°c	-50	CEh
. . .	. . .	. . .
0°c	0	00h
. . .	. . .	. . .
50°c	50	32h
. . .	. . .	. . .
127°c	127	7Fh

22.2.14 REGISTERS 54-59H: FAN TACHOMETER LOW LIMIT

Register Address	Read/ Write	Register Name	Bit 7 (MSb)	Bit 6	Bit 5	Bit 4	Bit 3	Bit 2	Bit 1	Bit 0 (LSb)	Default Value
54h	R/W	FANTACH1 Minimum LSB	7	6	5	4	3	2	1	0	FFh
55h	R/W	FANTACH1 Minimum MSB	15	14	13	12	11	10	9	8	FFh
56h	R/W	FANTACH2 Minimum LSB	7	6	5	4	3	2	1	0	FFh
57h	R/W	FANTACH2 Minimum MSB	15	14	13	12	11	10	9	8	FFh
58h	R/W	FANTACH3 Minimum LSB	7	6	5	4	3	2	1	0	FFh
59h	R/W	FANTACH3 Minimum MSB	15	14	13	12	11	10	9	8	FFh

Setting the Lock bit has no effect on these registers.

The Fan Tachometer Low Limit registers indicate the tachometer reading under which the corresponding bit will be set in the Interrupt Status Register 2 register. In Auto Fan Control mode, the fan can run at high speeds (100% duty cycle), so care should be taken in software to ensure that the limit is low enough not to cause sporadic alerts. Note that an interrupt status event will be generated when the tachometer reading is greater than the minimum tachometer limit.

The fan tachometer will not cause a bit to be set in the interrupt status register if the current value in the associated Current PWM Duty registers is 00h or if the PWM is disabled via the PWM Configuration Register.

Interrupts will never be generated for a fan if its tachometer minimum is set to FFFFh.

22.2.15 REGISTERS 5C-5EH: PWM CONFIGURATION

Register Address	Read/Write	Register Name	Bit 7 (MSb)	Bit 6	Bit 5	Bit 4	Bit 3	Bit 2	Bit 1	Bit 0 (LSb)	Default Value
5Ch	R/W	PWM 1 Configuration	ZON2	ZON1	ZON0	INV	SUEN1	SPIN2	SPIN1	SPIN0	62h
5Dh	R/W	PWM 2 Configuration	ZON2	ZON1	ZON0	INV	SUEN2	SPIN2	SPIN1	SPIN0	62h
5Eh	R/W	PWM 3 Configuration	ZON2	ZON1	ZON0	INV	SUEN3	SPIN2	SPIN1	SPIN0	62h

These registers become read only when the Lock bit is set. Any further attempts to write to these registers shall have no effect.

Bits [7:5] Zone/Mode

Bits [7:5] of the PWM Configuration registers associate each PWM with a temperature zone.

- When in Auto Fan Mode, the PWM will be assigned to a zone, and its PWM duty cycle will be adjusted according to the temperature of that zone. If ‘Hottest’ option is selected (101 or 110), the PWM will be controlled by the hot-

test of zones 2 and 3, or of zones 1, 2, and 3. If one of these options is selected, the PWM is controlled by the limits and parameters for the zone that requires the highest PWM duty cycle, as computed by the auto fan algorithm.

- When in manual control mode, the PWMx Current Duty Cycle Registers (30h-32h) become Read/Write. It is then possible to control the PWM outputs with software by writing to these registers. See PWMx Current Duty Cycle Registers description.
- When the fan is disabled (100) the corresponding PWM output is driven low (or high, if inverted).
- When the fan is Full On (011) the corresponding PWM output is driven high (or low, if inverted).

Note 1: Zone 1 is controlled by Remote Diode 1 Temp Reading register

2: Zone 2 is controlled by the Ambient Reading Register.

3: Zone 3 is controlled by Remote Diode 2 Temp Reading register

TABLE 22-7: FAN ZONE SETTING

ZON[7:5]	PWM Configuration
000	Fan on zone 1 auto
001	Fan on zone 2 auto
010	Fan on zone 3 auto
011	Fan always on full
100	Fan disabled
101	Fan controlled by hottest of zones 2,3
110	Fan controlled by hottest of zones 1,2,3
111	Fan manually controlled

Bit [4] PWM Invert

Bit [4] inverts the PWM output. If set to 1, 100% duty cycle will yield an output that is low for 255 clocks and high for 1 clock. If set to 0, 100% duty cycle will yield an output that is high for 255 clocks and low for 1 clock.

Bit [3] Forced Spin-up Enable

Bit [3] enables the forced spin up option for a particular PWM. If set to 1, the forced spin-up feature is enabled for the associated PWM. If set to 0, the forced spin-up feature is disabled for the associated PWM.

APPLICATION NOTE: This bit should always be enabled (set) to prevent fan tachometer interrupts during spinup.

Bits [2:0] Spin Up

Bits [2:0] specify the ‘spin up’ time for the fan. When a fan is being started from a stationary state, the PWM output is held at 100% duty cycle for the time specified in the table below before scaling to a lower speed. Note that during spin-up, the PWM pin is forced high for the duration of the spin-up time (i.e., 100% duty cycle = 256/256).

Note: To reduce the spin-up time, this device has implemented a feature referred to as Spin Up Reduction. Spin Up Reduction uses feedback from the tachometers to determine when each fan has started spinning properly. Spin up for a PWM will end when the tachometer reading register is below the minimum limit, or the spin-up time expires, whichever comes first. All tachs associated with a PWM must be below min. for spin-up to end prematurely. This feature can be disabled by clearing bit 4 (SUREN) of the Configuration register (7Fh). If disabled, the all fans go on full for the duration of their associated spin up time. Note that the Tachx minimum registers must be programmed to a value less than FFFFh in order for the spin-up reduction to work properly.

© 2016-2017 Microchip Technology Inc.

TABLE 22-8: FAN SPIN-UP REGISTER

SPIN[2:0]	Spin Up Time
000	0 sec
001	100ms
010	250ms (default)
011	400ms
100	700ms
101	1000ms
110	2000ms
111	4000ms

22.2.16 REGISTERS 5F-61H: ZONE TEMPERATURE RANGE, PWM FREQUENCY

Register Address	Read/ Write	Register Name	Bit 7 (MSb)	Bit 6	Bit 5	Bit 4	Bit 3	Bit 2	Bit 1	Bit 0 (LSb)	Default Value
5Fh	R/W	Zone 1 Range / Fan 1 Frequency	RAN3	RAN2	RAN1	RAN0	FRQ3	FRQ2	FRQ1	FRQ0	CBh
60h	R/W	Zone 2 Range / Fan 2 Frequency	RAN3	RAN2	RAN1	RAN0	FRQ3	FRQ2	FRQ1	FRQ0	CBh
61h	R/W	Zone 3 Range / Fan 3 Frequency	RAN3	RAN2	RAN1	RAN0	FRQ3	FRQ2	FRQ1	FRQ0	CBh

These registers become read only when the Lock bit is set. Any further attempts to write to these registers shall have no effect.

In Auto Fan Mode, when the temperature for a zone is above the Low Temperature Limit (registers 67-69h) and below the Absolute Temperature Limit (registers 6A-6Ch) the speed of a fan assigned to that zone is determined as follows by the auto fan control logic.

When the temperature reaches the temperature value programmed in the Zone x Low Temp Limit register, the PWM output assigned to that zone is at PWMx Minimum Duty Cycle. Between Zone x Low Temp Limit and (Zone x Low Temp Limit + Zone x Range), the PWM duty cycle increases linearly according to the temperature as shown in the figure below.

FIGURE 22-1: FAN ACTIVITY ABOVE FAN TEMP LIMIT

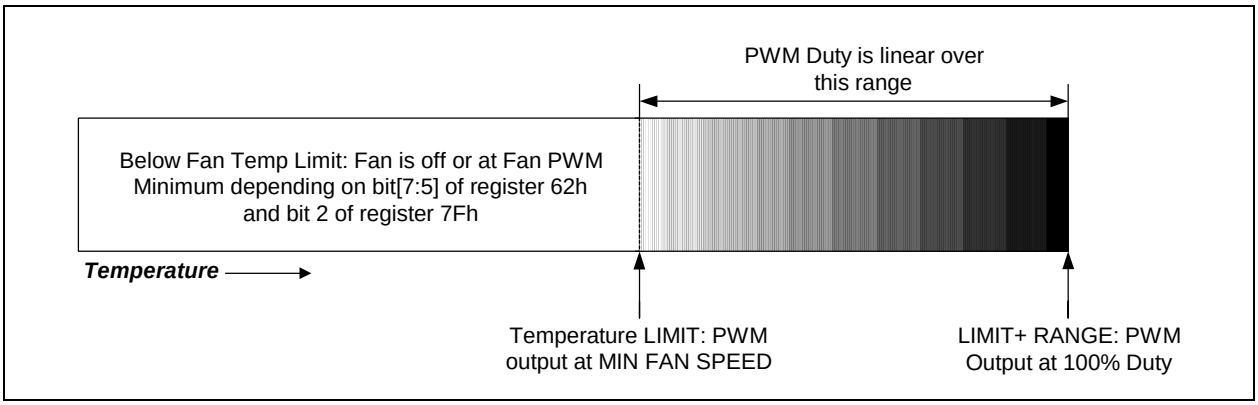

Example for PWM1 assigned to Zone 1:

- Zone 1 Low Temp Limit (Register 67h) is set to 50°C (32h).
- Zone 1 Range (Register 5Fh) is set to 8°C (7h)
- PWM1 Minimum Duty Cycle (Register 64h) is set to 50% (80h)

In this case, the PWM1 duty cycle will be 50% at 50°C.

Since (Zone 1 Low Temp Limit) + (Zone 1 Range) = 50°C + 8°C = 58°C, the fan controlled by PWM1 will run at 100% duty cycle when the temperature of the Zone 1 sensor is at 58°C.

Since the midpoint of the fan control range is 54°C, and the median duty cycle is 75% (Halfway between the PWM Minimum and 100%), PWM1 duty cycle would be 75% at 54°C.

Above (Zone 1 Low Temp Limit) + (Zone 1 Range), the duty cycle must be 100%.

The PWM frequency bits [3:0] determine the PWM frequency for the fan. If the high frequency option is selected the associated FANTACH inputs must be configured for Mode 1.

22.2.16.1 PWM Frequency Selection (Default =1011 bits=25kHz)

TABLE 22-9: PWM FREQUENCY SELECTION

Frequency Select Bits[3:0]	Frequency 14.318MHz Clock Source
0000	11.0 Hz
0001	14.6 Hz
0010	21.9 Hz
0011	29.3 Hz
0100	35.2 Hz
0101	44.0 Hz
0110	58.6 Hz
0111	87.7 Hz
1000	15kHz
1001	20kHz
1010	30kHz
1011	25kHz (default)
1100	Reserved
1101	Reserved
1110	Reserved
1111	Reserved

22.2.16.2 Range Selection (Default =1100=32°C)

TABLE 22-10: REGISTER SETTING VS. TEMPERATURE RANGE

RAN[3:0]	Range (°C)
0000	2
0001	2.5
0010	3.33
0011	4
0100	5
0101	6.67
0110	8
0111	10
1000	13.33
1001	16
1010	20
1011	26.67
1100	32
1101	40
1110	53.33
1111	80

© 2016-2017 Microchip Technology Inc.

Note: The range numbers will be used to calculate the slope of the PWM ramp up. For the fractional entries, the PWM will go on full when the temp reaches the next integer value e.g., for 3.33, PWM will be full on at (min. temp + 4).

22.2.17 REGISTER 62H, 63H: PWM RAMP RATE CONTROL

Register Address	Read/ Write	Register Name	Bit 7 (MSb)	Bit 6	Bit 5	Bit 4	Bit 3	Bit 2	Bit 1	Bit 0 (LSb)	Default Value
62h	R/W	PWM 1 Ramp Rate Control	RES1	RES1	RES1	RES	RR1E	RR1-2	RR1-1	RR1-0	E0h
63h	R/W	PWM 2, PWM 3 Ramp Rate Control	RR2E	RR2-2	RR2-1	RR2-0	RR3E	RR3-2	RR3-1	RR3-0	00h

These registers become read only when the Lock bit is set. Any further attempts to write to these registers shall have no effect.

RES1 bits are set to ‘1’ and are read only, writes are ignored.

Description of Ramp Rate Control bits:

If the Remote1 or Remote2 pins are connected to a processor or chipset, instantaneous temperature spikes may be sampled by the part. The auto fan control logic calculates the PWM duty cycle for all temperature readings. If Ramp Rate Control is disabled, the PWM output will jump or oscillate between different PWM duty cycles causing the fan to suddenly change speeds, which creates unwanted fan noise. If enabled, the PWM Ramp Rate Control logic will prevent the PWM output from jumping, instead the PWM will ramp up/down towards the new duty cycle at a pre-determined ramp rate.

Ramp Rate Control

The Ramp Rate Control logic limits the amount of change to the PWM duty cycle over a period of time. This period of time is programmable via the Ramp Rate Control bits. For a detailed description of the Ramp Rate Control bits see Table 22-11.

Note 1: RR1E, RR2E, and RR3E enable PWM Ramp Rate Control for PWM 1, 2, and 3 respectively.

2: RR1-2, RR1-1, and RR1-0 control ramp rate time for PWM 1

3: RR2-2, RR2-1, and RR2-0 control ramp rate time for PWM 2

4: RR3-2, RR3-1, and RR3-0 control ramp rate time for PWM 3

TABLE 22-11: PWM RAMP RATE CONTROL

RRx-[2:0]	PWM Ramp Time (SEC) (Time from 33% Duty Cycle to 100% Duty Cycle)	PWM Ramp Time (SEC) (Time from 0% Duty Cycle to 100% Duty Cycle)	Time per PWM Step (PWM Step Size = 1/255)	PWM Ramp Rate (Hz)
000	35	52.53	206 msec	4.85
001	17.6	26.52	104 msec	9.62
010	11.8	17.595	69 msec	14.49
011	7.0	10.455	41 msec	24.39
100	4.4	6.63	26 msec	38.46
101	3.0	4.59	18 msec	55.56
110	1.6	2.55	10 msec	100
111	0.8	1.275	5 msec	200

Note: This assumes the Ramp Rate Enable bit (RRxE) is set.

22.2.18 REGISTERS 64-66H: MINIMUM PWM DUTY CYCLE

Register Address	Read/ Write	Register Name	Bit 7 (MSb)	Bit 6	Bit 5	Bit 4	Bit 3	Bit 2	Bit 1	Bit 0 (LSb)	Default Value
64h	R/W	PWM1 Minimum Duty Cycle	7	6	5	4	3	2	1	0	80h
65h	R/W	PWM2 Minimum Duty Cycle	7	6	5	4	3	2	1	0	80h
66h	R/W	PWM3 Minimum Duty Cycle	7	6	5	4	3	2	1	0	80h

These registers become read only when the Lock bit is set. Any further attempts to write to these registers shall have no effect.

These registers specify the minimum duty cycle that the PWM will output when the measured temperature reaches the Temperature LIMIT register setting in Auto Fan Control Mode.

TABLE 22-12: PWM DUTY VS. REGISTER SETTING

Minimum PWM Duty	Value (Decimal)	Value (HEX)
0%	0	00h
. . .	. . .	. . .
25%	64	40h
. . .	. . .	. . .
50%	128	80h
. . .	. . .	. . .
100%	255	FFh

22.2.19 REGISTERS 67-69H: ZONE LOW TEMPERATURE LIMIT

Register Address	Read/ Write	Register Name	Bit 7 (MSb)	Bit 6	Bit 5	Bit 4	Bit 3	Bit 2	Bit 1	Bit 0 (LSb)	Default Value
67h	R/W	Zone 1 (Remote Diode 1) Low Temp Limit	7	6	5	4	3	2	1	0	80h Note 22-18
68h	R/W	Zone 2 (Ambient) Low Temp Limit	7	6	5	4	3	2	1	0	80h Note 22-18
69h	R/W	Zone 3 (Remote Diode 2) Low Temp Limit	7	6	5	4	3	2	1	0	80h Note 22-18

Note 22-18 This register is reset to the default value following a VCC POR when the PWRGD_PS signal is asserted.

These registers become read only when the Lock bit is set. Any further attempts to write to these registers shall have no effect.

These are the temperature limits for the individual zones. When the current temperature equals this limit, the fan will be turned on if it is not already. When the temperature exceeds this limit, the fan speed will be increased according to the auto fan algorithm based on the setting in the Zone x Range / PWMx Frequency register. Default = 90°C=5Ah.

© 2016-2017 Microchip Technology Inc.

TABLE 22-13: TEMPERATURE LIMIT VS. REGISTER SETTING

Limit	Limit (DEC)	Limit (HEX)
-127°c	-127	81h
. . .	. . .	. . .
-50°c	-50	CEh
. . .	. . .	. . .
0°c	0	00h
. . .	. . .	. . .
50°c	50	32h
. . .	. . .	. . .
127°c	127	7Fh

22.2.20 REGISTERS 6A-6CH: ABSOLUTE TEMPERATURE LIMIT

Register Address	Read/ Write	Register Name	Bit 7 (MSb)	Bit 6	Bit 5	Bit 4	Bit 3	Bit 2	Bit 1	Bit 0 (LSb)	Default Value
6Ah	R/W	Zone 1 Temp Absolute Limit	7	6	5	4	3	2	1	0	64h
6Bh	R/W	Zone 2 Temp Absolute Limit	7	6	5	4	3	2	1	0	64h
6Ch	R/W	Zone 3 Temp Absolute Limit	7	6	5	4	3	2	1	0	64h

These registers become read only when the Lock bit is set. Any further attempts to write to these registers shall have no effect.

In Auto Fan mode, if any zone associated with a PWM output exceeds the temperature set in the Absolute limit register, all PWM outputs will increase their duty cycle to 100% except those that are disabled via the PWM Configuration registers. This is a safety feature that attempts to cool the system if there is a potentially catastrophic thermal event.

If an absolute limit register set to 80h (-128°c), the safety feature is disabled for the associated zone. That is, if 80h is written into the Zone x Temp Absolute Limit Register, then regardless of the reading register for the zone, the fans will not turn on-full based on the absolute temp condition.

Default =100°c=64h.

When any fan is in auto fan mode, then if the temperature in any zone exceeds absolute limit, all fans go to full, including any in manual mode, except those that are disabled. Therefore, even if a zone is not associated with a fan, if that zone exceeds absolute, then all fans go to full. In this case, the absolute limit can be chosen to be 7Fh for those zones that are not associated with a fan, so that the fans won't turn on unless the temperature hits 127 degrees.

TABLE 22-14: ABSOLUTE LIMIT VS. REGISTER SETTING

Absolute Limit	Abs Limit (DEC)	Abs Limit (HEX)
-127°c	-127	81h
. . .	. . .	. . .
-50°c	-50	CEh
. . .	. . .	. . .
0°c	0	00h

TABLE 22-14: ABSOLUTE LIMIT VS. REGISTER SETTING (CONTINUED)

Absolute Limit	Abs Limit (DEC)	Abs Limit (HEX)
. . .	. . .	. . .
50°c	50	32h
. . .	. . .	. . .
127°c	127	7Fh

22.2.21 REGISTERS 6D-6EH: MCHP TEST REGISTERS

Register Address	Read/ Write	Register Name	Bit 7 (MSb)	Bit 6	Bit 5	Bit 4	Bit 3	Bit 2	Bit 1	Bit 0 (LSb)	Default Value
6Dh	R/W	MCHP Test Register	7	6	5	4	3	2	1	0	44h
6Eh	R/W	MCHP Test register	7	6	5	4	RES	RES	RES	RES	40h

22.2.22 REGISTER 70-72H: MCHP TEST REGISTER

Register Address	Read/ Write	Register Name	Bit 7 (MSb)	Bit 6	Bit 5	Bit 4	Bit 3	Bit 2	Bit 1	Bit 0 (LSb)	Default Value
70h	R	MCHP Test Register	7	6	5	4	3	2	1	0	N/A
71h	R	MCHP Test Register	7	6	5	4	3	2	1	0	N/A
72h	R	MCHP Test Register	7	6	5	4	3	2	1	0	N/A

This is a read-only MCHP test register. Writing to this register has no effect.

22.2.23 REGISTER 73-78H: MCHP TEST REGISTER

Register Address	Read/ Write	Register Name	Bit 7 (MSb)	Bit 6	Bit 5	Bit 4	Bit 3	Bit 2	Bit 1	Bit 0 (LSb)	Default Value
73h	R	MCHP Test Register	RES	RES	RES	RES	TST3	TST2	TST1	TST0	09h
74h	R/W	MCHP Test Register	RES	RES	RES	RES	TST3	TST2	TST1	TST0	09h
75h	R	MCHP Test Register	RES	RES	RES	RES	TST3	TST2	TST1	TST0	09h
76h	R/W	MCHP Test Register	RES	RES	RES	RES	TST3	TST2	TST1	TST0	09h
77h	R	MCHP Test Register	RES	RES	RES	RES	TST3	TST2	TST1	TST0	09h
78h	R/W	MCHP Test Register	RES	RES	RES	RES	TST3	TST2	TST1	TST0	09h

These are MCHP Test registers. Writing to these registers may cause unwanted results.

22.2.24 REGISTER 79H: MCHP TEST REGISTER

Register Address	Read/ Write	Register Name	Bit 7 (MSb)	Bit 6	Bit 5	Bit 4	Bit 3	Bit 2	Bit 1	Bit 0 (LSb)	Default Value
79h	R/W	MCHP Test Register	TST7	TST6	TST5	TST4	TST3	TST2	TST1	TST0	00h

This is a read/write register. Writing this register may produce unwanted results.

This register becomes read only when the Lock bit is set. Any further attempts to write to this register shall have no effect.

22.2.25 REGISTER 7CH: SPECIAL FUNCTION REGISTER

Register Address	Read/ Write	Register Name	Bit 7 (MSb)	Bit 6	Bit 5	Bit 4	Bit 3	Bit 2	Bit 1	Bit 0 (LSb)	Default Value
7Ch	R/W	Special Function	AVG2	AVG1	AVG0	MCHP	MCHP	INT_EN	MONMD	RES	E0h

This register becomes read only when the Lock bit is set. Any further attempts to write to this register shall have no effect.

© 2016-2017 Microchip Technology Inc.

This register contains the following bits:

Bit[0] Reserved

Bit[1] Monitoring Mode Select

0= Continuous Monitor Mode (default)

1= Cycle Monitor Mode

Bit[2] Interrupt (nHWM_INT Pin) Enable

0= Disables nHWM_INT pin output function (default)

1= Enables nHWM_INT pin output function

Bit[3] MCHP Reserved

This is a read/write bit. Reading this bit has no effect. Writing this bit to ‘1’ may cause unwanted results.Bit [4] MCHP Reserved

This is a read/write bit. Reading this bit has no effect. Writing this bit to ‘1’ may cause unwanted results.

Bits [7:5] AVG[2:0]

The AVG[2:0] bits determine the amount of averaging for each of the measurements that are performed by the hardware monitor before the reading registers are updated (TABLE 22). The AVG[2:0] bits are priority encoded where the most significant bit has highest priority. For example, when the AVG2 bit is asserted, 32 averages will be performed for each measurement before the reading registers are updated regardless of the state of the AVG[1:0] bits.

TABLE 22-15: AVG[2:0] BIT DECODER

SFTR[7:5]			Averages Per Reading		
AVG2	**AVG1**	**AVG0**	**REM Diode 1**	**REM Diode 2**	**Internal Diode**
0	0	0	128	128	8
0	0	1	16	16	1
0	1	X	16	16	16
1	X	X	32	32	32

Note: The default for the AVG[2:0] bits is ‘010’b.

22.2.26 REGISTER 7EH: INTERRUPT ENABLE 1 REGISTER

Register Address	Read/ Write	Register Name	Bit 7 (MSb)	Bit 6	Bit 5	Bit 4	Bit 3	Bit 2	Bit 1	Bit 0 (LSb)	Default Value
7Eh	R/W	Interrupt Enable 1 (Voltages)	VCC	12V	5V	VTR	VCCP	2.5V	VBAT	VOLT	ECh

This register becomes read only when the Lock bit is set. Any further attempts to write to this register shall have no effect.

This register is used to enable individual voltage error events to set the corresponding status bits in the interrupt status registers. This register also contains the group voltage enable bit (Bit[0] VOLT), which is used to enable voltage events to force the interrupt pin (nHWM_INT) low if interrupts are enabled (see Bit[2] INTEN of the Special Function register at offset 7Ch).

This register contains the following bits:

Bit[0] Group interrupt Voltage Enable (VOLT)

0=Out-of-limit voltages do not affect the state of the nHWM_INT pin (default)

1=Enable out-of-limit voltages to make the nHWM_INT pin active low

Bit[1] VBAT Error Enable

Bit[2] 2.5V Error Enable

Bit[3] Vccp Error Enable

Bit[4] VTR Error Enable

Bit[5] 5V Error Enable

Bit[6] 12V Error Enable

Bit[7] VCC Error Enable

The individual voltage error event bits are defined as follows:

0= disable

1= enable.

See FIGURE 21-3: Interrupt Control on page 128.

22.2.27 REGISTER 7FH: CONFIGURATION REGISTER

Register Address	Read/ Write	Register Name	Bit 7 (MSb)	Bit 6	Bit 5	Bit 4	Bit 3	Bit 2	Bit 1	Bit 0 (LSb)	Default Value
7Fh	R/W	Configuration	INIT	MCHP	MCHP	SUREN	TRDY Note 22-19	MON_ DN	RES	RES	10h

Note 22-19 TRDY is cleared when the PWRGD_PS signal is asserted.

These registers become read only when the Lock bit is set. Any further attempts to write to these registers shall have no effect.

This register contains the following bits:

Bit[0] Reserved

Bit[1] Reserved

Bit[2] MON_DN: This bit is used to detect when the monitoring cycle is completed following the START bit being set to 0. When the START bit is cleared, the hardware monitoring block always completes the monitoring cycle. 0= monitoring cycle active, 1= monitoring cycle complete.

APPLICATION NOTE: When the START bit is 1, and the device is monitoring, this bit will toggle each time it completes the monitoring cycle. It is intended that the user only read this bit when the START bit is 0.

Bit[3] TRDY: Temperature Reading Ready. This bit indicates that the temperature reading registers have valid values. This bit is used after writing the start bit to ‘1’. 0= not valid, 1=valid.

Bit[4] SUREN: Spin-up reduction enable. This bit enables the reduction of the spin-up time based on feedback from all fan tachometers associated with each PWM. 0=disable, 1=enable (default)

Bit[5] MCHP Reserved

This is an MCHP Reserved bit. Writing this bit to a value different than the default value may cause unwanted results.

Bit[5] MCHP Reserved

This is an MCHP Reserved bit. Writing this bit to a value different than the default value may cause unwanted results.

Bit[6] MCHP Reserved

This is an MCHP Reserved bit. Writing this bit to a value different than the default value may cause unwanted results.

Bit[7] Initialization

Setting the INIT bit to ‘1’ performs a soft reset. This bit is self-clearing. Soft Reset sets all the registers except the Reading Registers to their default values.

© 2016-2017 Microchip Technology Inc.

22.2.28 REGISTER 80H: INTERRUPT ENABLE 2 REGISTER

Register Address	Read/ Write	Register Name	Bit 7 (MSb)	Bit 6	Bit 5	Bit 4	Bit 3	Bit 2	Bit 1	Bit 0 (LSb)	Default Value
80h	R/W	Interrupt Enable 2 (Fan Tachs)	RES	RES	RES	RES	FAN-TACH3	FAN-TACH2	FAN-TACH1	FAN-TACH	1Eh

These registers become read only when the Lock bit is set. Any further attempts to write to these registers shall have no effect.

This register is used to enable individual fan tach error events to set the corresponding status bits in the interrupt status registers. This register also contains the group fan tach enable bit (Bit[0] TACH), which is used to enable fan tach events to force the interrupt pin (nHWM_INT) low if interrupts are enabled (see Bit[2] INTEN of the Special Function register at offset 7Ch).

This register contains the following bits:

Bit[0] FANTACH (Group TACH Enable)

0= Out-of-limit tachometer readings do not affect the state of the nHWM_INT pin (default)

1= Enable out-of-limit tachometer readings to make the nHWM_INT pin active low

Bit[1] Fantach 1 Event Enable

Bit[2] Fantach 2 Event Enable

Bit[3] Fantach 3 Event Enable

Bit[4] Reserved

Bit[5] Reserved

Bit[6] Reserved

Bit[7] Reserved

The individual fan tach error event bits are defined as follows:

0= disable

1= enable.

22.2.29 REGISTER 81H: TACH_PWM ASSOCIATION REGISTER

Register Address	Read/ Write	Register Name	Bit 7 (MSb)	Bit 6	Bit 5	Bit 4	Bit 3	Bit 2	Bit 1	Bit 0 (LSb)	Default Value
81h	R/W	TACH_PWM Association	RES	RES	T3H	T3L	T2H	T2L	T1H	T1L	24h

These registers become read only when the Lock bit is set. Any further attempts to write to these registers shall have no effect.

This register is used to associate a PWM with a tachometer input. This association is used by the fan logic to determine when to prevent a bit from being set in the interrupt status registers.

The fan tachometer will not cause a bit to be set in the interrupt status register:

a) if the current value in Current PWM Duty registers is 00h or
b) if the fan is disabled via the Fan Configuration Register.

Note: A bit will never be set in the interrupt status for a fan if its tachometer minimum is set to FFFFh.

See bit definition below.

Bits[1:0] Tach1. These bits determine the PWM associated with this Tach. See bit combinations below.

Bits[3:2] Tach2. These bits determine the PWM associated with this Tach. See bit combinations below.

Bits[5:4] Tach3. These bits determine the PWM associated with this Tach. See bit combinations below.

Bits[7:6] Reserved

Bits[1:0], Bits[3:2], Bits[5:4], Bits[7:6]	PWM Associated With Tachx
00	PWM1
01	PWM2
10	PWM3
11	Reserved

Note 1: Any PWM that has no TACH inputs associated with it must be configured to operate in Mode 1.

2: All TACH inputs must be associated with a PWM output. If the tach is not being driven by the associated PWM output it should be configured to operate in Mode 1 and the associated TACH interrupt must be disabled.

22.2.30 REGISTER 82H: INTERRUPT ENABLE 3 REGISTER

Register Address	Read/ Write	Register Name	Bit 7 (MSb)	Bit 6	Bit 5	Bit 4	Bit 3	Bit 2	Bit 1	Bit 0 (LSb)	Default Value
82h	R/W	Interrupt Enable 3 (Temp)	RES	RES	RES	RES	D2EN	D1EN	AMB	TEMP	0Eh

These registers become read only when the Lock bit is set. Any further attempts to write to these registers shall have no effect.

This register is used to enable individual thermal error events to set the corresponding status bits in the interrupt status registers. This register also contains the group thermal enable bit (Bit[0] TEMP), which is used to enable thermal events to force the interrupt pin (nHWM_INT) low if interrupts are enabled (see Bit[2] INTEN of the Special Function register at offset 7Ch).

This register contains the following bits:
Bit[0] TEMP. Group temperature enable bit.

0= Out-of-limit temperature readings do not affect the state of the nHWM_INT pin (default)

1= Enable out-of-limit temperature readings to make the nHWM_INT pin active low

Bit[1] ZONE 2 Temperature Status Enable bit.

Bit[2] ZONE 1 Temperature Status Enable bit.

Bit[3] ZONE 3 Temperature Status Enable bit

Bit[4] Reserved

Bit[5] Reserved

Bit[6] Reserved

Bit[7] Reserved

The individual thermal error event bits are defined as follows:

0= disable

1= enable

22.2.31 REGISTER 83H: INTERRUPT STATUS REGISTER 3

Register Address	Read/ Write	Register Name	Bit 7 (MSb)	Bit 6	Bit 5	Bit 4	Bit 3	Bit 2	Bit 1	Bit 0 (LSb)	Default Value
83h	RWC[1]	Interrupt Status 3	RES	RES	RES	RES	RES	RES	Vbat	VTR	00h

Note: This is a read/write-to-clear register. The status bits are cleared on a write of one if the event causing the interrupt is no longer active. Writing a zero to these bits has no effect.

The Interrupt Status Register 3 bits[1:0] are automatically set by the device whenever a voltage event occurs on the VTR or Vbat inputs. A voltage event occurs when any of these inputs violate the limits set in the corresponding limit registers.

© 2016-2017 Microchip Technology Inc.

This register holds a set bit until the event is cleared by software or until the individual enable bit is cleared. Once set, the Interrupt Status Register 3 bits remain set until the individual enable bits is cleared, even if the voltage or tachometer reading no longer violate the limits set in the limit registers. Note that clearing the group Temp, Fan, or Volt enable bits or the global INTEN enable bit has no effect on the status bits.

Note: The individual enable bits for VTR and Vbat are located in the Interrupt Enable 1 register at offset 7Eh.

This register is read only – a write to this register has no effect.

Bit	Name	R/W	Default	Description
0	VTR_Error	R	0	The device automatically sets this bit to 1 when the VTR input voltage is less than or equal to the limit set in the VTR Low Limit register or greater than the limit set in the VTR High Limit register.
1	Vbat_Error	R	0	The device automatically sets this bit to 1 when the Vbat input voltage is less than or equal to the limit set in the Vbat Low Limit register or greater than the limit set in the Vbat High Limit register.
2-7	Reserved	R	0	Reserved

22.2.32 REGISTERS 84H-88H: A/D CONVERTER LSBS REGISTERS

Register Address	Read/ Write	Register Name	Bit 7 (MSb)	Bit 6	Bit 5	Bit 4	Bit 3	Bit 2	Bit 1	Bit 0 (LSb)	Default Value
84h	R	A/D Converter LSbs Reg 5	VTR.3	VTR.2	VTR.1	VTR.0	VBT.3	VBT.2	VBT.1	VBT.0	N/A
85h	R	A/D Converter LSbs Reg 1	RD2.3	RD2.2	RD2.1	RD2.0	RD1.3	RD1.2	RD1.1	RD1.0	N/A
86h	R	A/D Converter LSbs Reg 2	V12.3	V12.2	V12.1	V12.0	AM.3	AM.2	AM.1	AM.0	N/A
87h	R	A/D Converter LSbs Reg 3	V50.3	V50.2	V50.1	V50.0	V25.3	V25.2	V25.1	V25.0	N/A
88h	R	A/D Converter LSbs Reg 4	VCC.3	VCC.2	VCC.1	VCC.0	VCP.3	VCP.2	VCP.1	VCP.0	N/A

There is a 10-bit Analog to Digital Converter (ADC) located in the hardware monitoring block that converts the measured voltages into 10-bit reading values. Depending on the averaging scheme enabled (i.e., 16x averaging, 32x averaging, etc.), the hardware monitor may take multiple readings and average them to create 12-bit reading values. The 8 MSb's of the reading values are placed in the Reading Registers. When the upper 8-bits located in the reading registers are read the 4 LSb's are latched into their respective bits in the A/D Converter LSbs Register. This give 12-bits of resolution with a minimum value of $1/16^{th}$ per unit measured. (i.e., Temperature Range: -127.9375 ºC < Temp < 127.9375 ºC and Voltage Range: 0 < Voltage < 256.9375). See the DC Characteristics for the accuracy of the reading values.

The eight most significant bits of the 12-bit averaged readings are stored in Reading registers and compared with Limit registers. The Interrupt Status Register bits are asserted if the corresponding measured value(s) on the inputs violate their programmed limits.

22.2.33 REGISTERS 89H: MCHP TEST REGISTER

Register Address	Read/ Write	Register Name	Bit 7 (MSb)	Bit 6	Bit 5	Bit 4	Bit 3	Bit 2	Bit 1	Bit 0 (LSb)	Default Value
89h	R	MCHP Test Register	7	6	5	4	3	2	1	0	N/A

This is a read-only MCHP test register. Writing to this register has no effect on the hardware.

22.2.34 REGISTERS 8AH: MCHP TEST REGISTER

Register Address	Read/ Write	Register Name	Bit 7 (MSb)	Bit 6	Bit 5	Bit 4	Bit 3	Bit 2	Bit 1	Bit 0 (LSb)	Default Value
8Ah	R	MCHP Test Register	RES	TST6	TST5	TST4	TST3	TST2	TST1	TST0	4Dh

22.2.35 REGISTERS 8BH: MCHP TEST REGISTER

Register Address	Read/ Write	Register Name	Bit 7 (MSb)	Bit 6	Bit 5	Bit 4	Bit 3	Bit 2	Bit 1	Bit 0 (LSb)	Default Value
8Bh	R/W	MCHP Test Register	RES	TST6	TST5	TST4	TST3	TST2	TST1	TST0	4Dh

This register becomes read only when the Lock bit is set. Any further attempts to write to this register shall have no effect.

This register must not be written. Writing this register may produce unexpected results.

22.2.36 REGISTERS 8CH: MCHP TEST REGISTER

Register Address	Read/ Write	Register Name	Bit 7 (MSb)	Bit 6	Bit 5	Bit 4	Bit 3	Bit 2	Bit 1	Bit 0 (LSb)	Default Value
8Ch	R	MCHP Test Register	RES	RES	RES	TST4	TST3	TST2	TST1	TST0	0Eh

22.2.37 REGISTERS 8DH: MCHP TEST REGISTER

Register Address	Read/ Write	Register Name	Bit 7 (MSb)	Bit 6	Bit 5	Bit 4	Bit 3	Bit 2	Bit 1	Bit 0 (LSb)	Default Value
8Dh	R/W	MCHP Test Register	RES	RES	RES	TST4	TST3	TST2	TST1	TST0	0Eh

This register becomes read only when the Lock bit is set. Any further attempts to write to this register shall have no effect.

This register must not be written. Writing this register may produce unexpected results.

22.2.38 REGISTERS 8EH: MCHP TEST REGISTER

Register Address	Read/ Write	Register Name	Bit 7 (MSb)	Bit 6	Bit 5	Bit 4	Bit 3	Bit 2	Bit 1	Bit 0 (LSb)	Default Value
8Eh	R	MCHP Test Register	TST7	TST6	TST5	TST4	TST3	TST2	TST1	TST0	N/A

This register is an MCHP Test register.

22.2.39 REGISTERS 90H-92H: FANTACHX OPTION REGISTERS

Register Address	Read/ Write	Register Name	Bit 7 (MSb)	Bit 6	Bit 5	Bit 4	Bit 3	Bit 2	Bit 1	Bit 0 (LSb)	Default Value
90h	R/W	FANTACH1 Option	RES	RES	RES	3EDG	MODE	EDG1	EDG0	SLOW	04h
91h	R/W	FANTACH2 Option	RES	RES	RES	3EDG	MODE	EDG1	EDG0	SLOW	04h
92h	R/W	FANTACH3 Option	RES	RES	RES	3EDG	MODE	EDG1	EDG0	SLOW	04h

These registers become read only when the Lock bit is set. Any further attempts to write to these registers shall have no effect.

Bit[0] SLOW

0= Force tach reading register to FFFFh if number of tach edges detected is greater than 0, but less than programmed number of edges. (default)

1= Force tach reading register to FFFEh if number of tach edges detected is greater than 0, but less than programmed number of edges.

Bit[2:1] The number of edges for tach reading:

00= 2 edges

01= 3 edges

10= 5 edges (default)

11= 9 edges

Bit[3] Tachometer Reading Mode

0= mode 1 standard (Default)

1= mode 2 enhanced.

Note 1: Unused FANTACH inputs must be configured for Mode 1.

2: Tach inputs associated with PWM outputs that are configured for high frequency mode must be configured for Mode 1.

© 2016-2017 Microchip Technology Inc.

Bit[4] 3 Edge Detection (Mode 2 only)

0= Don't ignore first 3 edges (default)

1= Ignore first 3 tachometer edges after guard time

Note:	This bit has been added to support a small sampling of fans that emit irregular tach pulses when the PWM transitions 'ON'. Typically, the guard time is sufficient for most fans.

Bit[7:5] Reserved

22.2.40 REGISTERS 94H-96H: PWMX OPTION REGISTERS

Register Address	Read/ Write	Register Name	Bit 7 (MSb)	Bit 6	Bit 5	Bit 4	Bit 3	Bit 2	Bit 1	Bit 0 (LSb)	Default Value
94h	R/W	PWM1 Option	RES	RES	OPP	GRD1	GRD0	SZEN	UPDT1	UPDT0	0Ch
95h	R/W	PWM2 Option	RES	RES	OPP	GRD1	GRD0	SZEN	UPDT1	UPDT0	0Ch
96h	R/W	PWM3 Option	RES	RES	OPP	GRD1	GRD0	SZEN	UPDT1	UPDT0	0Ch

These registers become read only when the Lock bit is set. Any further attempts to write to these registers shall have no effect.

Bits[1:0] Tachs reading registers associated with PWMx are updated: (Mode 2 only)

00= once a second (default)

01= twice a second

1x= every 300msec

Bit[2] Snap to Zero (SZEN)

This bit determines if the PWM output ramps down to OFF or if it is immediately set to zero.

0= Step Down the PWMx output to Off at the programmed Ramp Rate

1= Transition PWMx to Off immediately when the calculated duty cycle is 00h (default)

Bit[4:3] Guard time (Mode 2 only)

00= 63 clocks (90kHz clocks ~ 700usec)

01= 32 clocks (90kHz clocks ~ 356usec) (default)

10= 16 clocks (90kHz clocks ~ 178usec)

11= 8 clocks (90kHz clocks ~ 89usec)

Bit[5] Opportunistic Mode Enable

0= Opportunistic Mode Disabled. Update Tach Reading once per PWMx Update Period (see Bits[1:0] in this register)

1= Opportunistic Mode is Enabled. The tachometer reading register is updated any time a valid tachometer reading can be made during the 'on' time of the PWM output signal. If a valid reading is detected prior to the Update cycle, then the Update counter is reset.

Bit[7:6] Reserved

22.2.41 REGISTER 97H: MCHP TEST REGISTER

Register Address	Read/ Write	Register Name	Bit 7 (MSb)	Bit 6	Bit 5	Bit 4	Bit 3	Bit 2	Bit 1	Bit 0 (LSb)	Default Value
97h	R/W	MCHP Test Register	TST7	TST6	TST5	TST4	TST3	TST2	TST1	TST0	5Ah

These registers become read only when the Lock bit is set. Any further attempts to write to these registers shall have no effect.

This is an MCHP Test Register. Writing to this register may cause unwanted results.

22.2.42 REGISTER 98H:MCHP TEST REGISTER

Register Address	Read/ Write	Register Name	Bit 7 (MSb)	Bit 6	Bit 5	Bit 4	Bit 3	Bit 2	Bit 1	Bit 0 (LSb)	Default Value
98h	R/W	MCHP Test Register	TST7	TST6	TST5	TST4	TST3	TST2	TST1	TST0 glitch	F1h

These registers become read only when the Lock bit is set. Any further attempts to write to these registers shall have no effect.

22.2.43 This is an MCHP Test Register. Writing to this register may cause unwanted results.REGISTERS 99H-9AH:VOLTAGE READING REGISTERS

See Section 22.2.2, "Registers 20-24h, 99-9Ah: Voltage Reading," on page 162.

22.2.44 REGISTERS 9B-9EH: VOLTAGE LIMIT REGISTERS

22.2.45 REGISTER A3H: MCHP TEST REGISTER

Register Address	Read/ Write	Register Name	Bit 7 (MSb)	Bit 6	Bit 5	Bit 4	Bit 3	Bit 2	Bit 1	Bit 0 (LSb)	Default Value
A3h	R/W	MCHP Test Register	TST7	TST6	TST5	TST4	TST3	TST2	TST1	TST0	00h

This is an MCHP Test Register. Writing to this register may cause unwanted results.

22.2.46 REGISTER A4H: MCHP TEST REGISTER

Register Address	Read/ Write	Register Name	Bit 7 (MSb)	Bit 6	Bit 5	Bit 4	Bit 3	Bit 2	Bit 1	Bit 0 (LSb)	Default Value
A4h	R	MCHP Test Register	TST7	TST6	TST5	TST4	TST3	TST2	TST1	TST0	02h

This register is an MCHP Test register.

22.2.47 REGISTER A5H: INTERRUPT STATUS REGISTER 1 - SECONDARY

Register Address	Read/ Write	Register Name	Bit 7 (MSb)	Bit 6	Bit 5	Bit 4	Bit 3	Bit 2	Bit 1	Bit 0 (LSb)	Default Value
A5h	R/WC	Interrupt Status 1 - Secondary	INT2 Note 22-20	D2	AMB	D1	5V	VCC	Vccp	2.5V	00h

Note 22-20 This is a read-only bit. Writing ‘1’ to this bit has no effect.

Note 1: This register is reset to its default value when the PWRGD_PS signal transitions high.

2: This is a read/write-to-clear register. Bits[6:4] are cleared on a write of one if the temperature event is no longer active. Writing a zero to these bits has no effect.

See definition of Register 41h: Interrupt Status Register 1 on page 167 for setting and clearing bits.

Note: Only the primary status registers generate an interrupt event.

22.2.48 REGISTER A6H: INTERRUPT STATUS REGISTER 2 - SECONDARY

Register Address	Read/Write	Register Name	Bit 7 (MSb)	Bit 6	Bit 5	Bit 4	Bit 3	Bit 2	Bit 1	Bit 0 (LSb)	Default Value
A6h	R/WC	Interrupt Status Register 2 - Secondary	ERR2	ERR1	RES	FAN-TACH3	FAN-TACH2	FAN-TACH1	RES	12V	00h

Note 1: This register is reset to its default value when the PWRGD_PS signal transitions high.

2: This is a read/write-to-clear register. The status bits in this register are cleared on a write of one if the event causing the interrupt is no longer active. Writing a zero to these bits has no effect.

© 2016-2017 Microchip Technology Inc.

See definition of Register 42h: Interrupt Status Register 2 on page 168 for setting and clearing bits.

Note: Only the primary status registers generate an interrupt event.

22.2.49 REGISTER A7H: INTERRUPT STATUS REGISTER 3 - SECONDARY

Register Address	Read/Write	Register Name	Bit 7 (MSb)	Bit 6	Bit 5	Bit 4	Bit 3	Bit 2	Bit 1	Bit 0 (LSb)	Default Value
A7h	R/WC	Interrupt Status Register 3-Secondary	RES	RES	RES	RES	RES	RES	VBAT	VTR	00h

Note 1: This register is reset to its default value when the PWRGD_PS signal transitions high.

2: This is a read/write-to-clear register. The status bits in this register are cleared on a write of one if the event causing the interrupt is no longer active. Writing a zero to these bits has no effect.

See definition of Register 83h: Interrupt Status Register 3 on page 182 for setting and clearing bits.

Note: Only the primary status registers generate an interrupt event.

22.2.50 REGISTER ABH: TACH 1-3 MODE REGISTER

Register Address	Read/Write	Register Name	Bit 7 (MSb)	Bit 6	Bit 5	Bit 4	Bit 3	Bit 2	Bit 1	Bit 0 (LSb)	Default Value
ABh	R/W	Tach 1-3 Mode	T1M1	T1M0	T2M1	T2M0	T3M1	T3M0	RES	RES	00h

The following defines the mode control bits:

- bits[7:6]: Tach1 Mode
- bits[5:4]: Tach2 Mode.
- bits[3:2]: Tach3 Mode.
- bits[1:0]: RESERVED.

For bits[7:2], these bits are defined as follows:

- 00= normal operation (default)
- 01= locked rotor mode, active high signal
- 10= locked rotor mode, active low signal
- 11= undefined.

For bits[1:0], these bits are defined as RESERVED. Writes have no affect, reads return 00.

22.2.51 REGISTER ADH: MCHP TEST REGISTER

Register Address	Read/Write	Register Name	Bit 7 (MSb)	Bit 6	Bit 5	Bit 4	Bit 3	Bit 2	Bit 1	Bit 0 (LSb)	Default Value
ADh	R	MCHP Test Register	7	6	5	4	3	2	1	0	00h

This is a read-only MCHP test register. Writing to this register has no effect.

22.2.52 REGISTERS AE-AFH, B3H: TOP TEMPERATURE LIMIT REGISTERS

Register Address	Read/Write	Register Name	Bit 7 (MSb)	Bit 6	Bit 5	Bit 4	Bit 3	Bit 2	Bit 1	Bit 0 (LSb)	Default Value
AEh	R/W	Top Temperature Remote Diode 1 (Zone 1)	7	6	5	4	3	2	1	0	2Dh
AFh	R/W	Top Temperature Remote Diode 2 (Zone 3)	7	6	5	4	3	2	1	0	2Dh
B3h	R/W	Top Temperature Ambient (Zone 2)	7	6	5	4	3	2	1	0	2Dh

Note: These registers are reset to their default values when the powergood_ps signal transitions high.

This register becomes read only when the Lock bit is set. Any further attempts to write to this register shall have no effect.

The Top Temperature Registers define the upper bound of the operating temperature for each zone. If the temperature of the zone exceeds this value, the minimum temperature for the zone can be configured to be adjusted down.

The Top Temperature registers are used as a comparison point for the AMTA feature, to determine if the Low Temp Limit register for a zone should be adjusted down. The Top temp register for a zone is not used if the AMTA feature is not enabled for the zone. The AMTA feature is enabled via the Tmin Adjust Enable register at 0B7h.

22.2.53 REGISTER B4H: MIN TEMP ADJUST TEMP RD1, RD2 (ZONES 1& 3)

Register Address	Read/ Write	Register Name	Bit 7 (MSb)	Bit 6	Bit 5	Bit 4	Bit 3	Bit 2	Bit 1	Bit 0 (LSb)	Default Value
B4h	R/W	Min Temp Adjust Temp RD1, RD2 (Zones 1&3)	R1ATP1	R1ATP 0	R2ATP 1	R2ATP 0	RES	RES	RES	RES	00h

This register becomes read only when the Lock bit is set. Any further attempts to write to this register shall have no effect.

Bits[7:4] are used to select the temperature adjustment values that are subtracted from the Zone Low temp limit for zones 1& 3. There is a 2-bit value for each of the remote zones that is used to program the value that is subtracted from the low temp limit temperature register when the temperature reading for the zone reaches the Top Temperature for the AMTA feature. The AMTA feature is enabled via the Tmin Adjust Enable register at B7h.

These bits are defined as follows: ZxATP[1:0]:

- 00= 2oC (default)
- 01= 4oC
- 10= 6oC
- 11= 8oC

Note: The Zones are hardwired to the sensors in the following manner:

- R1ATP[1:0] = Zone 1 = Remote Diode 1
- AMATP[1:0] = Zone 2 = Ambient
- R2ATP[1:0] = Zone 3 = Remote Diode 2

22.2.54 REGISTER B5H: MIN TEMP ADJUST TEMP AND DELAY AMB (ZONE 2)

Register Address	Read/ Write	Register Name	Bit 7 (MSb)	Bit 6	Bit 5	Bit 4	Bit 3	Bit 2	Bit 1	Bit 0 (LSb)	Default Value
B5h	R/W	Min Temp Adjust Temp and Delay (Zone 2)	RES	RES	AMATP 1	AMATP 0	RES	RES	AMAD1	AMAD0	00h

This register becomes read only when the Lock bit is set. Any further attempts to write to this register shall have no effect.

Bits[5:4] Min Temp Adjust for Ambient Temp Sensor (Zone 2)

See Register B4h: Min Temp Adjust Temp RD1, RD2 (Zones 1& 3) on page 188 for a definition of the Min Temp Adjust bits.

Bits[1:0] Min Temp Adjust Delay for Ambient Temp Sensor (Zone 2)

See Register B6h: Min Temp Adjust Delay RD1, RD2 (ZONE 1 & 3) Register on page 188 for a definition of the Min Temp Delay bits.

22.2.55 REGISTER B6H: MIN TEMP ADJUST DELAY RD1, RD2 (ZONE 1 & 3) REGISTER

Register Address	Read/ Write	Register Name	Bit 7 (MSb)	Bit 6	Bit 5	Bit 4	Bit 3	Bit 2	Bit 1	Bit 0 (LSb)	Default Value
B6h	R/W	Min Temp Adjust Temp and Delay RD1, RD2 (Zones 1 & 3)	R1 AD1	R1 AD0	R2 AD1	R2 AD0	RES	RES	RES	RES	00h

© 2016-2017 Microchip Technology Inc.

This register becomes read only when the Lock bit is set. Any further attempts to write to this register shall have no effect.

Bits[7:4] are the bits to program the time delay for subsequently adjusting the low temperature limit value for zones 1&3 once an adjustment is made. These bits are defined as follows: RxAD[1:0]:

- 00= 1min (default)
- 01= 2min
- 10= 3min
- 11= 4min

Note: The Zones are hardwired to the sensors in the following manner:

- R1AD[1:0] = Zone 1 = Remote Diode 1
- AMAD[1:0] = Zone 2 = Ambient
- R2AD[1:0] = Zone 3 = Remote Diode 2

22.2.56 REGISTER B7H: MIN TEMP ADJUST ENABLE REGISTER

Register Address	Read/ Write	Register Name	Bit 7 (MSb)	Bit 6	Bit 5	Bit 4	Bit 3	Bit 2	Bit 1	Bit 0 (LSb)	Default Value
B7h	R/W	Tmin Adjust Enable	RES	RES	RES	RES	TMIN_ ADJ_ EN2	TMIN_ ADJ_ EN1	TMIN_ ADJ_ ENA	TOP_ INT_ EN	00h

This register becomes read only when the Lock bit is set. Any further attempts to write to this register shall have no effect.

This register is used to enable the Automatic Minimum Temperature Adjustment (AMTA) feature for each zone. AMTA allows for an adjustment of the low temp limit temperature register for each zone when the current temperature for the zone exceeds the Top Temperature. Bits[3:1] are used to enable an adjustment of the low temp limit for each of zones 1-3.

This register also contains the bit (TOP_INT_EN) to enable an interrupt to be generated anytime the top temp for any zone is exceeded. This interrupt is generated based on a bit in the Top Temp Exceeded status register (0B8h) being set. Note that the INT_EN bit (register 7Ch) must also be set for an interrupt to be generated on the THERM pin.

Note: The Zones are hardwired to the sensors in the following manner:

- TMIN_ ADJ_ EN1 = Zone 1 = Remote Diode 1
- TMIN_ ADJ_ ENA = Zone 2 = Ambient
- TMIN_ ADJ_ EN2 = Zone 3 = Remote Diode 2

22.2.57 REGISTER B8H: TOP TEMP EXCEEDED STATUS REGISTER

Register Address	Read/ Write	Register Name	Bit 7 (MSb)	Bit 6	Bit 5	Bit 4	Bit 3	Bit 2	Bit 1	Bit 0 (LSb)	Default Value
B8h	R/WC	Top Temp Exceeded Status	RES	RES	RES	RES	RES	STS2	STS1	STSA	00h
Note: Each bit in this register is cleared on a write of 1 if the event is not active.											

Note: This register is reset to its default value when the PWRGD_PS signal transitions high.

The Top Temp Exceeded Status Register bits are automatically set by the device whenever the temperature value in the reading register for a zone exceeds the value in the Top Temperature register for the zone.

This register holds a bit set until the bit is written to 1 by software. The contents of this register are cleared (set to 0) automatically by the device after it is written by software, if the temperature no longer exceeds the value in the Top Temperature register for the zone. Once set, the Status bits remain set until written to 1, even if the if the temperature no longer exceeds the value in the Top Temperature register for the zone.

Note: If a bit is set in this register, an interrupt can be generated if the TOP_INT_EN bit (register B7h) and, for the nHWM_INT pin to go active, the INT_EN bit (7Ch) is set.

22.2.58 REGISTER BAH: MCHP RESERVED REGISTER

Register Address	Read/ Write	Register Name	Bit 7 (MSb)	Bit 6	Bit 5	Bit 4	Bit 3	Bit 2	Bit 1	Bit 0 (LSb)	Default Value
BAh	R/W	MCHP Reserved	RES	RES	RES	RES	RES	RES	RES	RES	03h

This is an MCHP Reserved bit. Writing this bit to a value different than the default value may cause unwanted results.

22.2.59 REGISTER BBH: MCHP RESERVED REGISTER

Register Address	Read/ Write	Register Name	Bit 7 (MSb)	Bit 6	Bit 5	Bit 4	Bit 3	Bit 2	Bit 1	Bit 0 (LSb)	Default Value
BBh	R	MCHP Reserved	7	6	5	4	3	2	1	0	00h

This is an MCHP Reserved bit. Writing this bit to a value different than the default value may cause unwanted results.

22.2.60 REGISTER 0BDH: MCHP RESERVED REGISTER

Register Address	Read/ Write	Register Name	Bit 7 (MSb)	Bit 6	Bit 5	Bit 4	Bit 3	Bit 2	Bit 1	Bit 0 (LSb)	Default Value
BDh	R	MCHP Reserved	7	6	5	4	3	2	1	0	N/A

This is an MCHP Reserved bit. Writing this bit to a value different than the default value may cause unwanted results.

22.2.61 REGISTER BFH: MCHP RESERVED REGISTER

Register Address	Read/ Write	Register Name	Bit 7 (MSb)	Bit 6	Bit 5	Bit 4	Bit 3	Bit 2	Bit 1	Bit 0 (LSb)	Default Value
BFh	R/W	MCHP Reserved	RES	RES	RES	RES	RES	RES	RES	RES	00h

This is an MCHP Reserved bit. Writing this bit to a value different than the default value may cause unwanted results.

22.2.62 REGISTER C0H: MCHP RESERVED REGISTER

Register Address	Read/ Write	Register Name	Bit 7 (MSb)	Bit 6	Bit 5	Bit 4	Bit 3	Bit 2	Bit 1	Bit 0 (LSb)	Default Value
C0h	R/W	MCHP Reserved	RES	RES	RES	RES	RES	RES	RES	RES	00h

This is an MCHP Reserved bit. Writing this bit to a value different than the default value may cause unwanted results.

22.2.63 REGISTER C1H: MCHP RESERVED REGISTER

Register Address	Read/ Write	Register Name	Bit 7 (MSb)	Bit 6	Bit 5	Bit 4	Bit 3	Bit 2	Bit 1	Bit 0 (LSb)	Default Value
C1h	R/W	Thermtrip Control	RES	RES	RES	RES	RES	RES	THERM-TRIP_C-TRL	RES	01h

THERMTRIP_CTRL: Bit 1 in the Thermtrip Control register. May be enabled to assert the Thermtrip# pin if programmed limits are exceeded as indicated by the Thermtrip Status register 1=enable, 0=disable (default).

© 2016-2017 Microchip Technology Inc.

22.2.64 REGISTERS C4-C5, C9H: THERMTRIP TEMPERATURE LIMIT ZONE REGISTERS

Register Address	Read/ Write	Register Name	Bit 7 (MSb)	Bit 6	Bit 5	Bit 4	Bit 3	Bit 2	Bit 1	Bit 0 (LSb)	Default Value
C4h	R/W	THERMTRIP Temp Limit ZONE 1 (Remote Diode 1)	7	6	5	4	3	2	1	0	7Fh
C9h	R/W	THERMTRIP Temp Limit ZONE 2 (Ambient)	7	6	5	4	3	2	1	0	7Fh
C5h	R/W	THERMTRIP Temp Limit ZONE 3 (Remote Diode 2)	7	6	5	4	3	2	1	0	7Fh

These registers become read only when the Lock bit is set. Any further attempts to write to these registers shall have no effect.

The nTHERMTRIP pin can be configured to assert when one of the temperature zones is above its associated THERMTRIP temperature limit (THERMTRIP Temp Limit ZONES 1-3). The THERMTRIP temperature limit is a separate limit register from the high limit used for setting the interrupt status bits for each zone.

The THERMTRIP Temp Limit ZONE 1-3 registers represent the upper temperature limit for asserting nTHERMTRIP pin for each zone. These registers are defined as follows:

If the monitored temperature for the zone exceeds the value set in the associated THERMTRIP Temp Limit ZONE 1-3 registers, the corresponding bit in the THERMTRIP status register will be set. The nTHERMTRIP pin may or may not be set depending on the state of the associated enable bits (in the THERMTRIP Output Enable register).

Note: The zone must exceed the limits set in the associated THERMTRIP Temp Limit ZONE 1-3 register for two successive monitoring cycles in order for the nTHERMTRIP pin to go active (and for the associated status bit to be set).

22.2.65 REGISTER CAH: THERMTRIP STATUS REGISTER

Register Address	Read/ Write	Register Name	Bit 7 (MSb)	Bit 6	Bit 5	Bit 4	Bit 3	Bit 2	Bit 1	Bit 0 (LSb)	Default Value
CAh	R/WC	THERMTRIP Status	RES	RES	RES	RES	RES	RD 2	RD 1	AMB	00h
Note:	Each bit in this register is cleared on a write of 1 if the event is not active.										

Note: This register is reset to its default value when the PWRGD_PS signal transitions high.

This register holds a bit set until the bit is written to 1 by software. The contents of this register are cleared (set to 0) automatically by the device after it is written by software, if the nTHERMTRIP pin is no longer active. Once set, the Status bits remain set until written to 1, even if the nTHERMTRIP pin is no longer active.

Bits[2:0] THERMTRIP zone status bits (one bit per zone). A status bit is set to ‘1’ if the associated zone temp exceeds the associated THERMTRIP Temp Limit register value.

22.2.66 REGISTER CBH: THERMTRIP OUTPUT ENABLE REGISTER

Register Address	Read/ Write	Register Name	Bit 7 (MSb)	Bit 6	Bit 5	Bit 4	Bit 3	Bit 2	Bit 1	Bit 0 (LSb)	Default Value
CBh	R/W	THERMTRIP Output Enable	RES	RES	RES	RES	RES	RD2	RD1	AMB	00h

These registers become read only when the Lock bit is set. Any further attempts to write to these registers shall have no effect.

Bits[2:0] in THERMTRIP Output Enable register, THERMTRIP output enable bits (one bit per zone). Each zone may be individually enabled to assert the nTHERMTRIP pin if the zone temperature reading exceeds the associated THERMTRIP Temp Limit register value. 1=enable, 0=disable (default).

22.2.67 REGISTER CEH: MCHP RESERVED REGISTER

Register Address	Read/ Write	Register Name	Bit 7 (MSb)	Bit 6	Bit 5	Bit 4	Bit 3	Bit 2	Bit 1	Bit 0 (LSb)	Default Value
CEh	R/W		RES	RES	RES	RES	RES	RD2 _INT_ EN	RD1 _INT_ EN	AMB_ INT_ EN	00h

22.2.68 REGISTERS D1,D6,DBH: PWM MAX SEGMENT REGISTERS

Register Address	Read/ Write	Register Name	Bit 7 (MSb)	Bit 6	Bit 5	Bit 4	Bit 3	Bit 2	Bit 1	Bit 0 (LSb)	Default Value
0D1h	R/W	PWM1 Max	7	6	5	4	3	2	1	0	FFh
0D6h	R/W	PWM2 Max	7	6	5	4	3	2	1	0	FFh
0DBh	R/W	PWM3 Max	7	6	5	4	3	2	1	0	FFh

These registers become read only when the Lock bit is set. Any further attempts to write to these registers shall have no effect.

Registers 0D1h, 0D6h and 0DBh are used to program the Max PWM duty cycle for the fan function for each PWM.

22.2.69 REGISTER E0H: ENABLE LSBS FOR AUTO FAN

Register Address	Read/ Write	Register Name	Bit 7 (MSb)	Bit 6	Bit 5	Bit 4	Bit 3	Bit 2	Bit 1	Bit 0 (LSb)	Default Value
E0h	R/W	Enable LSbs for AutoFan	RES	RES	PWM3_ n1	PWM3_ n0	PWM2_ n1	PWM2_ n0	PWM1_ n1	PWM1_ n0	00h

Bits[7:6] Reserved

Bits[5:4] PWM3_n[1:0]

Bits[3:2] PWM2_n[1:0]

Bits[1:0] PWM1_n[1:0]

The PWMx_n[1:0] configuration bits allow the autofan control logic to utilize the extended resolution bits in the temperature reading. Increasing the precision reduces the programmable temperature range that can be used to control the PWM outputs. For a description of the programmable temperature ranges see Registers 5F-61h: Zone Temperature Range, PWM Frequency on page 173.

Note: Increasing the precision does not limit the range of temperature readings supported. The active region for the autofan control is bound by the Minimum Zone Limit + Range, where the Minimum Zone Limit can be any integer value from -127 to +127 degrees.

PWMx_n[1:0]	Degree of Resolution per LSb Used in Autofan	Max Theoretical Temperature Range Supported	Max Programmable Temperature Range Supported
00	1	255	80
01	0.5	128.5	80
10	0.25	64.75	53.33
11	Reserved	Reserved	Reserved

22.2.70 REGISTERS E1H: MCHP TEST REGISTER

Register Address	Read/ Write	Register Name	Bit 7 (MSb)	Bit 6	Bit 5	Bit 4	Bit 3	Bit 2	Bit 1	Bit 0 (LSb)	Default Value
8Ah	R	MCHP Test Register	RES	TST6	TST5	TST4	TST3	TST2	TST1	TST0	4Dh

© 2016-2017 Microchip Technology Inc.

22.2.71 REGISTERS E2H: MCHP TEST REGISTER

Register Address	Read/ Write	Register Name	Bit 7 (MSb)	Bit 6	Bit 5	Bit 4	Bit 3	Bit 2	Bit 1	Bit 0 (LSb)	Default Value
8Ah	R	MCHP Test Register	RES	TST6	TST5	TST4	TST3	TST2	TST1	TST0	4Dh

22.2.72 REGISTERS E3H: MCHP TEST REGISTER

Register Address	Read/Write	Register Name	Bit 7 (MSb)	Bit 6	Bit 5	Bit 4	Bit 3	Bit 2	Bit 1	Bit 0 (LSb)	Default Value
8Ah	R	MCHP Test Register	RES	TST6	TST5	TST4	TST3	TST2	TST1	TST0	4Dh

22.2.73 REGISTER E9-EEH: MCHP TEST REGISTERS

Register Address	Read/ Write	Register Name	Bit 7 (MSb)	Bit 6	Bit 5	Bit 4	Bit 3	Bit 2	Bit 1	Bit 0 (LSb)	Default Value
E9h	R/W	MCHP Test Register	TST7	TST6	TST5	TST4	TST3	TST2	TST1	TST0	00h
EAh	R/W	MCHP Test Register	TST7	TST6	TST5	TST4	TST3	TST2	TST1	TST0	00h
EBh	R/W	MCHP Test Register	TST7	TST6	TST5	TST4	TST3	TST2	TST1	TST0	00h
ECh	R/W	MCHP Test Register	TST7	TST6	TST5	TST4	TST3	TST2	TST1	TST0	00h
EDh	R/W	MCHP Test Register	TST7	TST6	TST5	TST4	TST3	TST2	TST1	TST0	00h
EEh	R/W	MCHP Test Register	TST7	TST6	TST5	TST4	TST3	TST2	TST1	TST0	00h

These are MCHP Test Registers. Writing to these registers may cause unwanted results.

22.2.74 REGISTER FFH: MCHP TEST REGISTER

Register Address	Read/ Write	Register Name	Bit 7 (MSb)	Bit 6	Bit 5	Bit 4	Bit 3	Bit 2	Bit 1	Bit 0 (LSb)	Default Value
FFh	R	MCHP Test Register	TST7	TST6	TST5	TST4	TST3	TST2	TST1	TST0	N/A

This register is an MCHP Test register.

23.0 CONFIGURATION REGISTERS

The Configuration of the SCH322x is very flexible and is based on the configuration architecture implemented in typical Plug-and-Play components. The SCH322x is designed for motherboard applications in which the resources required by their components are known. With its flexible resource allocation architecture, the SCH322x allows the BIOS to assign resources at POST.

SYSTEM ELEMENTS

Primary Configuration Address Decoder

After a PCI Reset or Vcc Power On Reset the SCH322x is in the Run Mode with all logical devices disabled. The logical devices may be configured through two standard Configuration I/O Ports (INDEX and DATA) by placing the SCH322x into Configuration Mode.

The BIOS uses these configuration ports to initialize the logical devices at POST. The INDEX and DATA ports are only valid when the SCH322x Is in Configuration Mode.

Strap options must be added to allow four Configuration Register Base Address options: 0x002E, 0x004E, 0x162E, or 0x164E. At the deasserting edge of PCIRST# or VCC POR the nRTS1/SYSOPT0 pin is latched to determine the configuration base address:

- 0 = Index Base I/O Address bits A[7:0]= 0x2E
- 1 = Index Base I/O Address bits A[7:0]= 0x4E

At the deasserting edge of PCIRST# or VCC POR the nDTR1/SYSOPT1 pin is latched to determine the configuration base address:

- 0 = Index Base I/O Address bits A[15:8]= 0x16;
- 1 = Index Base I/O Address bits A[15:8]= 0x00

bit The above strap options will allow the Configuration Access Ports (CONFIG PORT, the INDEX PORT, and DATA PORT) to be controlled by the nRTS1/SYSOPT0 and nDTR1/SYSOPT1 pins and by the Configuration Port Base Address registers at offset 0x26 and 0x27. The configuration base address at power-up is determined by the SYSOPT strap option. The SYSOPT strap option is latched state of the nRTS1/SYSOPT0 and nDTR1/SYSOPT1 pins at the deasserting edge of PCIRST#. The nRTS1/SYSOPT0 pin determines the lower byte of the Base Address and the nDTR1/SYSOPT1 pin determines the upper byte of the Base Address. The following table summarizes the Base Configuration address selected by the SYSOPT strap option.

TABLE 23-1: SYSOPT STRAP OPTION CONFIGURATION ADDRESS SELECT

SYSOPT1	SYSOPT0	Default CONFIG PORT/ Index Port Address	Data Port
1	0	0x002E	INDEX PORT + 1
1	1	0x004E	
0	0	0x162E	
0	1	0x164E	

APPLICATION NOTE: The nRTS1/SYSOPT0 and the nDTR1/SYSOPT1 pins requires external pullup/pulldown resistors to set the default base I/O address for configuration to 0x002E, 0x004E, 0x162E, or 0x164E.

The INDEX and DATA ports are effective only when the chip is in the Configuration State.

Note 23-1 The configuration port base address can be relocated through CR26 and CR27.

Entering the Configuration State

The device enters the Configuration State when the following Config Key is successfully written to the CONFIG PORT.

Config Key = <0x55>

Exiting the Configuration State

The device exits the Configuration State when the following Config Key is successfully written to the CONFIG PORT.

Config Key = <0xAA>

© 2016-2017 Microchip Technology Inc.

CONFIGURATION SEQUENCE

To program the configuration registers, the following sequence must be followed:

1. Enter Configuration Mode
2. Configure the Configuration Registers
3. Exit Configuration Mode.

Enter Configuration Mode

To place the chip into the Configuration State the Config Key is sent to the chip's CONFIG PORT. The config key consists of 0x55 written to the CONFIG PORT. Once the configuration key is received correctly the chip enters into the Configuration State (The auto Config ports are enabled).

Configuration Mode

The system sets the logical device information and activates desired logical devices through the INDEX and DATA ports. In configuration mode, the INDEX PORT is located at the CONFIG PORT address and the DATA PORT is at INDEX PORT address + 1.

The desired configuration registers are accessed in two steps:

1. Write the index of the Logical Device Number Configuration Register (i.e., 0x07) to the INDEX PORT and then write the number of the desired logical device to the DATA PORT
2. Write the address of the desired configuration register within the logical device to the INDEX PORT and then write or read the configuration register through the DATA PORT.

Note:	If accessing the Global Configuration Registers, step (a) is not required.

Exit Configuration Mode

To exit the Configuration State the system writes 0xAA to the CONFIG PORT. The chip returns to the RUN State.

Note:	Only two states are defined (Run and Configuration). In the Run State the chip will always be ready to enter the Configuration State.

Programming Example

The following is an example of a configuration program in Intel 8086 assembly language.

```
;----------------------------.
; ENTER CONFIGURATION MODE   |
;----------------------------'
MOV DX,02EH
MOV AX,055H
OUT DX,AL
;----------------------------.
; CONFIGURE REGISTER CRE0,   |
; LOGICAL DEVICE 8           |
;----------------------------'
MOV DX,02EH
MOV AL,07H
OUT DX,AL ;Point to LD# Config Reg
MOV DX,02FH
MOV AL, 08H
OUT DX,AL;Point to Logical Device 8
;
MOV DX,02EH
MOV AL,E0H
OUT DX,AL; Point to CRE0
MOV DX,02fH
MOV AL,02H
OUT DX,AL; Update CRE0
;-----------------------------.
; EXIT CONFIGURATION MODE     |
;-----------------------------'
MOV DX,02EH
MOV AX,0AAH
OUT DX,AL
```

Note 1: SOFT RESET: Bit 0 of Configuration Control register set to one.

2: All host accesses are blocked for 500µs after Vcc POR (See FIGURE 27-1: Power-Up Timing on page 260.)

23.1 Configuration Registers

CAUTION: This device contains circuits which must not be used because their pins are not brought out of the package, and are pulled to known states internally. Any features, and especially Logical Devices, that are not listed in this document must not be activated or accessed. Doing so may cause unpredictable behavior and/or excessive currents, and therefore may damage the device and/or the system.

The following table summarizes the logical device allocation for the different varieties of SCH322x devices.

TABLE 23-2: SCH322X LOGICAL DEVICE SUMMARY

Logical Device	SCH3222	SCH3224	SCH3226	SCH3227
0	RESERVED	RESERVED	RESERVED	RESERVED
1	RESERVED	RESERVED	RESERVED	RESERVED
2	RESERVED	RESERVED	RESERVED	RESERVED
3	RESERVED	PARALLEL PORT	RESERVED	PARALLEL PORT
4	SERIAL PORT 1	SERIAL PORT 1	SERIAL PORT 1	SERIAL PORT 1
5	SERIAL PORT 2	SERIAL PORT 2	SERIAL PORT 2	SERIAL PORT 2
6	RESERVED	RESERVED	RESERVED	RESERVED
7	KEYBOARD	KEYBOARD	KEYBOARD	KEYBOARD
8	RESERVED	RESERVED	RESERVED	RESERVED
9	RESERVED	RESERVED	RESERVED	RESERVED
Ah	RUNTIME REGISTERS	RUNTIME REGISTERS	RUNTIME REGISTERS	RUNTIME REGISTERS
Bh	SERIAL PORT 3	RESERVED	SERIAL PORT 3	SERIAL PORT 3
Ch	SERIAL PORT 4	RESERVED	SERIAL PORT 4	SERIAL PORT 4
Dh	SERIAL PORT 5	SERIAL PORT 5	IF STRAPOPT=1 SERIAL PORTS [5/6] ELSE RESERVED	IF STRAPOPT=1 SERIAL PORTS [5/6] ELSE RESERVED
Eh	SERIAL PORT 6	SERIAL PORT 6		
Fh	RESERVED	RESERVED	RESERVED	RESERVED

TABLE 23-3: CONFIGURATION REGISTER SUMMARY

Index	Type	PCI Reset	VCC POR	VTR POR	Soft Reset	Configuration Register
GLOBAL CONFIGURATION REGISTERS						
0x02	W	0x00	0x00	0x00	-	Config Control
0x03	R	-	-	-	-	Reserved – reads return 0
0x07	R/W	0x00	0x00	0x00	0x00	Logical Device Number
0x20	R	0x7D or 0x7F	0x7D or 0x7F	0x7D or 0x7F	0x7D or 0x7F	Device ID - hard wired SCH3222 - 0x7F SCH3224 - 0x7F SCH3226 - 0x7D or 0x7F SCH3227 - 0x7D or 0x7F STRAPOPT pin selects value for SCH3226 and SCH3227. See this register in Table 23-4.
0x19	R/W	-	0x00	0x00	-	TEST8
0x21	R	Current Revision				Device Rev - hard wired

© 2016-2017 Microchip Technology Inc.

TABLE 23-3: CONFIGURATION REGISTER SUMMARY (CONTINUED)

Index	Type	PCI Reset	VCC POR	VTR POR	Soft Reset	Configuration Register
0x22	R/W	0x00	0x00	0x00	0x00	Power Control
0x23	R/W	0x00	0x00	0x00	-	Reserved
0x24	R/W	0x44	0x44	0x44	-	OSC
0x25	R/W	-	0x00	0x00	-	TEST9
0x26	R/W	See Table 23-1 on page 194	-	-	-	Configuration Port Address Byte 0 (Low Byte)
0x27	R/W	See Table 23-1 on page 194	-	-	-	Configuration Port Address Byte 1 (High Byte)
0x28	R	-	-	-	-	Reserved
0x29	R/W	-	0x00	0x00	-	TEST
0x2A	R/W	-	0x00	0x00	-	TEST 6
0x2B	R/W	-	0x00	0x00	-	TEST 4
0x2C	R/W	-	0x00	0x00	-	TEST 5
0x2D	R/W	-	0x00	0x00	-	TEST 1
0x2E	R/W	-	0x00	0x00	-	TEST 2
0x2F	R/W	-	0x00	0x00	-	TEST 3
LOGICAL DEVICE 0 CONFIGURATION REGISTERS (RESERVED)						
LOGICAL DEVICE 1 CONFIGURATION REGISTERS (RESERVED)						
LOGICAL DEVICE 2 CONFIGURATION REGISTERS (RESERVED)						
LOGICAL DEVICE 3 CONFIGURATION REGISTERS (PARALLEL PORT) AVAILABLE IN SCH3227, SCH3224 RESERVED IN SCH3226, SCH3222						
0x30	R/W	0x00	0x00	0x00	0x00	Activate
0x60	R/W	0x00	0x00	0x00	0x00	Primary Base I/O Address High Byte
0x61	R/W	0x00	0x00	0x00	0x00	Primary Base I/O Address Low Byte
0x70	R/W	0x00	0x00	0x00	0x00	Primary Interrupt Select
0x74	R/W	0x04	0x04	0x04	0x04	DMA Channel Select
0xF0	R/W	0x3C	0x3C	0x3C	-	Parallel Port Mode Register
0xF1	R/W	0x00	0x00	0x00	-	Parallel Port Mode Register 2
LOGICAL DEVICE 4 CONFIGURATION REGISTERS (SERIAL PORT 1)						
0x30	R/W	0x00	0x00	0x00	0x00	Activate Note 23-2
0x60	R/W	0x00	0x00	0x00	0x00	Primary Base I/O Address High Byte
0x61	R/W	0x00	0x00	0x00	0x00	Primary Base I/O Address Low Byte
0x70	R/W	0x00	0x00	0x00	0x00	Primary Interrupt Select
0xF0	R/W	0x00	0x00	0x00	-	Serial Port 1 Mode Register
LOGICAL DEVICE 5 CONFIGURATION REGISTERS (SERIAL PORT 2)						
0x30	R/W	0x00	0x00	0x00	0x00	Activate Note 23-2
0x60	R/W	0x00	0x00	0x00	0x00	Primary Base I/O Address High Byte

TABLE 23-3: CONFIGURATION REGISTER SUMMARY (CONTINUED)

Index	Type	PCI Reset	VCC POR	VTR POR	Soft Reset	Configuration Register
0x61	R/W	0x00	0x00	0x00	0x00	Primary Base I/O Address Low Byte
0x70	R/W	0x00	0x00	0x00	0x00	Primary Interrupt Select
0xF0	R/W	0x00	0x00	0x00	-	Serial Port 2 Mode Register
0xF1	R/W	0x02	0x02	0x02	-	IR Options Register
0xF2	R/W	0x03	0x03	0x03	-	IR Half Duplex Timeout
LOGICAL DEVICE 6 CONFIGURATION REGISTERS (RESERVED)						
LOGICAL DEVICE 7 CONFIGURATION REGISTERS (KEYBOARD)						
0x30	R/W	0x00	0x00	0x00	0x00	Activate
0x70	R/W	0x00	0x00	0x00	0x00	Primary Interrupt Select (Keyboard)
0x72	R/W	0x00	0x00	0x00	0x00	Secondary Interrupt Select (Mouse)
0xF0	R/W	0x00	0x00	0x00	-	KRESET and GateA20 Select
LOGICAL DEVICE 8 CONFIGURATION REGISTERS (RESERVED)						
LOGICAL DEVICE 9 CONFIGURATION REGISTERS (RESERVED)						
LOGICAL DEVICE A CONFIGURATION REGISTERS (RUNTIME REGISTERS)						
0x30	R/W	0x00	0x00	0x00	0x00	Activate
0x60	R/W	0x00	0x00	0x00	0x00	Primary Base I/O Address High Byte
0x61	R/W	0x00	0x00	0x00	0x00	Primary Base I/O Address Low Byte
0x62	R/W	0x00	0x00	0x00	0x00	Secondary Base I/O Address High Byte
0x63	R/W	0x00	0x00	0x00	0x00	Secondary Base I/O Address Low Byte
0XF0	R/W	-	-	0X00	-	CLOCKI32
0xF1	R/W	0x00	0x00	0x00	0x00	RESERVED: do not write.
0XF2	RW / R	0x04	0x04	0x04	-	Security Key Control Register
LOGICAL DEVICE B CONFIGURATION REGISTERS (SERIAL PORT 3) AVAILABLE IN SCH3227, SCH3226, SCH3222 RESERVED IN SCH3224						
0x30	R/W	0x00	0x00	0x00	0x00	Activate Note 23-2
0x60	R/W	0x00	0x00	0x00	0x00	Primary Base I/O Address High Byte
0x61	R/W	0x00	0x00	0x00	0x00	Primary Base I/O Address Low Byte
0x70	R/W	0x00	0x00	0x00	0x00	Primary Interrupt Select
0xF0	R/W	0x00	0x00	0x00	-	Serial Port 3 Mode Register
LOGICAL DEVICE C CONFIGURATION REGISTERS (SERIAL PORT 4) AVAILABLE IN SCH3227, SCH3226, SCH3222 RESERVED IN SCH3224						
0x30	R/W	0x00	0x00	0x00	0x00	Activate Note 23-2
0x60	R/W	0x00	0x00	0x00	0x00	Primary Base I/O Address High Byte
0x61	R/W	0x00	0x00	0x00	0x00	Primary Base I/O Address Low Byte

© 2016-2017 Microchip Technology Inc.

TABLE 23-3: CONFIGURATION REGISTER SUMMARY (CONTINUED)

Index	Type	PCI Reset	VCC POR	VTR POR	Soft Reset	Configuration Register
0x70	R/W	0x00	0x00	0x00	0x00	Primary Interrupt Select
0xF0	R/W	0x00	0x00	0x00	-	Serial Port 4 Mode Register
LOGICAL DEVICE D CONFIGURATION REGISTERS (SERIAL PORT 5) AVAILABLE IN SCH3224, SCH3222; IF STRAPOPT=1 SCH3227, SCH3226						
0x30	R/W	0x00	0x00	0x00	0x00	Activate Note 23-2
0x60	R/W	0x00	0x00	0x00	0x00	Primary Base I/O Address High Byte
0x61	R/W	0x00	0x00	0x00	0x00	Primary Base I/O Address Low Byte
0x70	R/W	0x00	0x00	0x00	0x00	Primary Interrupt Select
0xF0	R/W	0x00	0x00	0x00	-	Serial Port 5 Mode Register
LOGICAL DEVICE E CONFIGURATION REGISTERS (SERIAL PORT 6) AVAILABLE IN SCH3224, SCH3222; IF STRAPOPT=1 SCH3227, SCH3226						
0x30	R/W	0x00	0x00	0x00	0x00	Activate Note 23-2
0x60	R/W	0x00	0x00	0x00	0x00	Primary Base I/O Address High Byte
0x61	R/W	0x00	0x00	0x00	0x00	Primary Base I/O Address Low Byte
0x70	R/W	0x00	0x00	0x00	0x00	Primary Interrupt Select
0xF0	R/W	0x00	0x00	0x00	-	Serial Port 6 Mode Register
LOGICAL DEVICE F CONFIGURATION REGISTERS (RESERVED)						

Note 23-2 Serial ports 1 and 2 may be placed in the powerdown mode by clearing the associated activate bit located at CR30 or by clearing the associated power bit located in the Power Control register at CR22. Serial ports 3,4,5,6 (if available) may be placed in the powerdown mode by clearing the associated activate bit located at CR30. When in the powerdown mode, the serial port outputs are tristated. In cases where the serial port is multiplexed as an alternate function, the corresponding output will only be tristated if the serial port is the selected alternate function.

23.1.1 GLOBAL CONFIG REGISTERS

The chip-level (global) registers lie in the address range [0x00-0x2F]. The design MUST use all 8 bits of the ADDRESS Port for register selection. All unimplemented registers and bits ignore writes and return zero when read.

The INDEX PORT is used to select a configuration register in the chip. The DATA PORT is then used to access the selected register. These registers are accessible only in the Configuration Mode.

TABLE 23-4: CHIP-LEVEL (GLOBAL) CONFIGURATION REGISTERS

Register	Address	Description
CHIP (GLOBAL) CONTROL REGISTERS		
	0x00 - 0x01	Reserved - Writes are ignored, reads return 0.
Config Control Default = 0x00 on VCC POR, VTR POR and PCI RESET	0x02 W	The hardware automatically clears this bit after the write, there is no need for software to clear the bits. Bit 0 = 1: Soft Reset. Refer to the Table 23-3, “Configuration Register Summary,” on page 196 for the soft reset value for each register.
	0x03 - 0x06	Reserved - Writes are ignored, reads return 0.

TABLE 23-4: CHIP-LEVEL (GLOBAL) CONFIGURATION REGISTERS (CONTINUED)

Register	Address	Description
Logical Device # Default = 0x00 on VCC POR, VTR POR, SOFT RESET and PCI RESET	0x07 R/W	A write to this register selects the current logical device. This allows access to the control and configuration registers for each logical device. **Note:** The Activate command operates only on the selected logical device.
Reserved	0x08 - 0x18, 0x1A-0x1F	Reserved - Writes are ignored, reads return 0.
CHIP-LEVEL, MCHP DEFINED		
Device ID - Hard wired Default = 0x7D or 0x7F (see Description). on VCC POR, VTR POR, SOFT RESET and PCI RESET	0x20 R	A read only register which provides Legacy device identification, as follows: SCH3227 depends on STRAPOPT pin: if STRAPOPT=0: 0x7D if STRAPOPT=1: 0x7F SCH3226 depends on STRAPOPT pin: if STRAPOPT=0: 0x7D if STRAPOPT=1: 0x7F SCH3224 = 0x7F SCH3222 = 0x7F
Device Rev Hard wired = Current Revision	0x21 R	A read only register which provides device revision information. Bits[7:0] = current revision when read.
Power Control Default = 0x00 on VCC POR, VTR POR, SOFT RESET and PCI RESET	0x22 R/W	Bit[0] Reserved Bit[1] Reserved Bit[2] Reserved Bit[3] Parallel Port Power Bit[4] Serial Port 1 Power Bit[5] Serial Port 2 Power Bit[6] Reserved Bit[7] Reserved 0: Power Off or Disabled 1: Power On or Enabled
Reserved Default = 0x00 on VCC POR, VTR POR and PCI RESET	0x23 R/W	Reserved. This is a read/write register. Writing to this register may cause unwanted results.
OSC Default = 0x44, on on VCC POR, VTR POR and PCI RESET	0x24 R/W	Bit[0] Reserved Bit [1] PLL Control = 0 PLL is on (backward Compatible) = 1 PLL is off Bits[3:2] OSC = 01 Osc is on, BRG clock is on. = 10 Same as above (01) case. = 00 Osc is on, BRG Clock Enabled. = 11 Osc is off, BRG clock is disabled. Bit [5:4] Reserved, set to zero Bit [6] 16-Bit Address Qualification = 0 12-Bit Address Qualification = 1 16-Bit Address Qualification **Note:** For normal operation, bit 6 should be set. Bit[7] Reserved

© 2016-2017 Microchip Technology Inc.

TABLE 23-4: CHIP-LEVEL (GLOBAL) CONFIGURATION REGISTERS (CONTINUED)

Register	Address	Description
Configuration Address Byte 0 Default Sysopt0 = 0 0x2E Sysopt0 = 1 0x4E on VCC POR and PCI RESET	0x26	Bit[7:1] Configuration Address Bits [7:1] Bit[0] = 0 (Note 23-3)
Configuration Address Byte 1 Default Sysopt1 = 0 0x16 Sysopt1 = 1 0x00 n VCC POR and PCI RESET	0x27	Bit[7:0] Configuration Address Bits [15:8] Bits[15:21] = 0 (Note 23-3)
Default = 0x00 on VCC POR, SOFT RESET and PCI RESET	0x28	Bits[7:0] Reserved - Writes are ignored, reads return 0.

Note 23-3 To allow the selection of the configuration address to a user defined location, these Configuration Address Bytes are used. There is no restriction on the address chosen, except that A0 is 0, that is, the address must be on an even byte boundary. As soon as both bytes are changed, the configuration space is moved to the specified location with no delay (**Note:** Write byte 0, then byte 1; writing CR27 changes the base address).

The configuration address is only reset to its default address upon a PCI Reset or Vcc POR.

Note: The default configuration address is specified in Table 23-1, “SYSOPT Strap Option Configuration Address Select,” on page 194.

23.1.2 TEST REGISTERS

The following test registers are used in the SCH322x devices.

TABLE 23-5: TEST REGISTER SUMMARY

Register	Address	Description
TEST 8 Default = 0x00, on VCC POR and VTR POR	0x19 R/W	Test Modes: Reserved for MCHP. Users should not write to this register, may produce undesired results.
TEST 9 Default = 0x00, on VCC POR and VTR POR	0x25 R/W	Test Modes: Reserved for MCHP. Users should not write to this register, may produce undesired results.
TEST Default = 0x00 Note on VTR_POR BIT0/7 are reset BIT1-6 reset on TST_PORB from resgen block	0x29 R/W	Test Modes: Reserved for MCHP. Users should not write to this register, may produce undesired results.
TEST 6 Default = 0x00, on VCC POR and VTR POR	0x2A R/W	Test Modes: Reserved for MCHP. Users should not write to this register, may produce undesired results.

TABLE 23-5: TEST REGISTER SUMMARY (CONTINUED)

Register	Address	Description
TEST 4 Default = 0x00, on VCC POR and VTR POR	0x2B R/W	Test Modes: Reserved for MCHP. Users should not write to this register, may produce undesired results.
TEST 5 Default = 0x00, on VCC POR and VTR POR	0x2C R/W	Test Modes: Reserved for MCHP. Users should not write to this register, may produce undesired results.
TEST 1 Default = 0x00, on VCC POR and VTR POR	0x2D R/W	Test Modes: Reserved for MCHP. Users should not write to this register, may produce undesired results.
TEST 2 Default = 0x00, on VCC POR and VTR POR	0x2E R/W	Test Modes: Reserved for MCHP. Users should not write to this register, may produce undesired results.
TEST 3 Default = 0x00, on VCC POR and VTR POR	0x2F R/W	Test Modes: Reserved for MCHP. Users should not write to this register, may produce undesired results.

23.1.2.1 Logical Device Configuration/Control Registers [0x30-0xFF]

Used to access the registers that are assigned to each logical unit. A separate set (bank) of control and configuration registers exists for each logical device and is selected with the Logical Device # Register (0x07).

The INDEX PORT is used to select a specific logical device register. These registers are then accessed through the DATA PORT.

The Logical Device registers are accessible only when the device is in the Configuration State. The logical register addresses are shown in Table 23-6.

TABLE 23-6: LOGICAL DEVICE REGISTERS

Logical Device Register	Address	Description
Activate (Note 23-4) Default = 0x00 on VCC POR, VTR POR, PCI RESET and SOFT RESET	(0x30)	Bits[7:1] Reserved, set to zero. Bit[0] = 1 Activates the logical device currently selected through the Logical Device # register. = 0 Logical device currently selected is inactive
Logical Device Control	(0x31-0x37)	Reserved – Writes are ignored, reads return 0.
Logical Device Control	(0x38-0x3F)	Vendor Defined - Reserved - Writes are ignored, reads return 0.
Memory Base Address	(0x40-0x5F)	Reserved – Writes are ignored, reads return 0.
I/O Base Address (Note 23-5) (see Table 23-7, “Base I/O Range for Logical Devices,” on page 203) Default = 0x00 on VCC POR, VTR POR, PCI RESET and SOFT RESET	(0x60-0x6F) 0x60,2,... = addr[15:8] 0x61,3,... = addr[7:0]	Registers 0x60 and 0x61 set the base address for the device. If more than one base address is required, the second base address is set by registers 0x62 and 0x63. Refer to Table 23-7 on page 203 for the number of base address registers used by each device. Unused registers will ignore writes and return zero when read.

© 2016-2017 Microchip Technology Inc.

TABLE 23-6: LOGICAL DEVICE REGISTERS (CONTINUED)

Logical Device Register	Address	Description
Interrupt Select Defaults: 0x70 = 0x00 or 0x06 (Note 23-6) on VCC POR, VTR POR, PCI RESET and SOFT RESET 0x72 = 0x00, on VCC POR, VTR POR, PCI RESET and SOFT RESET	(0x70,0x72)	0x70 is implemented for each logical device. Refer to Interrupt Configuration Register description. Only the keyboard controller uses Interrupt Select register 0x72. Unused register (0x72) will ignore writes and return zero when read. Interrupts default to edge high (ISA compatible).
	(0x71,0x73)	Reserved - not implemented. These register locations ignore writes and return zero when read.
DMA Channel Select Default = 0x02 or 0x04 (Note 23-6) on VCC POR, VTR POR, PCI RESET and SOFT RESET	(0x74,0x75)	Only 0x74 is implemented for Parallel port. 0x75 is not implemented and ignores writes and returns zero when read. Refer to DMA Channel Configuration.
32-Bit Memory Space Configuration	(0x76-0xA8)	Reserved - not implemented. These register locations ignore writes and return zero when read.
Logical Device	(0xA9-0xDF)	Reserved - not implemented. These register locations ignore writes and return zero when read.
Logical Device Configuration	(0xE0-0xFE)	Reserved – Vendor Defined (see MCHP defined Logical Device Configuration Registers).
Reserved	0xFF	Reserved

Note 23-4 A logical device will be active and powered up according to the following equation unless otherwise specified:

DEVICE ON (ACTIVE) = (Activate Bit SET or Pwr/Control Bit SET).

The Logical device's Activate Bit and its Pwr/Control Bit are linked such that setting or clearing one sets or clears the other.

Note 23-5 If the I/O Base Addr of the logical device is not within the Base I/O range as shown in the Logical Device I/O map, then read or write is not valid and is ignored.

Note 23-6 The default value of the DMA Channel Select register for logical devices 3 and 5 is 0x04.

TABLE 23-7: BASE I/O RANGE FOR LOGICAL DEVICES

Logical Device Number	Logical Device	Register Index	Base I/O Range (Note 23-7)	Fixed Base Offsets
0x00	Reserved	n/a	n/a	n/a
0x01	Reserved	n/a	n/a	n/a
0x02	Reserved	n/a	n/a	n/a
0x03	Parallel Port	0x60,0x61	[0x0100:0x0FFC] ON 4 BYTE BOUNDARIES (EPP Not supported) or [0x0100:0x0FF8] ON 8 BYTE BOUNDARIES	+0 : Data/ecpAfifo +1 : Status +2 : Control +400h : cfifo/ecpDfifo/tfifo/cnfgA +401h : cnfgB +402h : ecr
			(all modes supported, EPP is only available when the base address is on an 8-byte boundary)	+3 : EPP Address +4 : EPP Data 0 +5 : EPP Data 1 +6 : EPP Data 2 +7 : EPP Data 3

TABLE 23-7: BASE I/O RANGE FOR LOGICAL DEVICES (CONTINUED)

Logical Device Number	Logical Device	Register Index	Base I/O Range (Note 23-7)	Fixed Base Offsets
0x04	Serial Port 1	0x60,0x61	[0x0100:0x0FF8] ON 8 BYTE BOUNDARIES	+0 : RB/TB/LSB div +1 : IER/MSB div +2 : IIR/FCR +3 : LCR +4 : MSR +5 : LSR +6 : MSR +7 : SCR
0x05	Serial Port 2	0x60,0x61	[0x0100:0x0FF8] ON 8 BYTE BOUNDARIES	+0 : RB/TB/LSB div +1 : IER/MSB div +2 : IIR/FCR +3 : LCR +4 : MSR +5 : LSR +6 : MSR +7 : SCR
0x06	Reserved	n/a	n/a	n/a
0x07	KYBD	n/a	Not Relocatable Fixed Base Address: 60,64	+0 : Data Register +4 : Command/Status Reg.
0x08	Reserved	n/a	n/a	n/a
0x09	Reserved	n/a	n/a	n/a
0x0A	Runtime Register Block	0x60,0x61	[0x0000:0x0F7F] on 128-byte boundaries	+00 : PME Status . . . +5F : Keyboard Scan Code (See Table 24-2 on page 216)
	Security Key Register	0x62, 0x63	[0x0000:0x0FDF on 32-byte boundaries	+00 : Security Key Byte 0 . . . +1F: Security Key Byte 31
0x0B	Serial Port 3 **APPROPRIATE DEVICES ONLY SEE CAUTION IN** Section 23.1, "Configuration Registers"	0x60,0x61	[0x0100:0x0FF8] ON 8 BYTE BOUNDARIES	+0 : RB/TB/LSB div +1 : IER/MSB div +2 : IIR/FCR +3 : LCR +4 : MSR +5 : LSR +6 : MSR +7 : SCR
0x0C	Serial Port 4 **APPROPRIATE DEVICES ONLY SEE CAUTION IN** Section 23.1, "Configuration Registers"	0x60,0x61	[0x0100:0x0FF8] ON 8 BYTE BOUNDARIES	+0 : RB/TB/LSB div +1 : IER/MSB div +2 : IIR/FCR +3 : LCR +4 : MSR +5 : LSR +6 : MSR +7 : SCR
0x0D	Serial Port 5 **APPROPRIATE DEVICES ONLY SEE CAUTION IN** Section 23.1, "Configuration Registers"	0x60,0x61	[0x0100:0x0FF8] ON 8 BYTE BOUNDARIES	+0 : RB/TB/LSB div +1 : IER/MSB div +2 : IIR/FCR +3 : LCR +4 : MSR +5 : LSR +6 : MSR +7 : SCR

© 2016-2017 Microchip Technology Inc.

TABLE 23-7: BASE I/O RANGE FOR LOGICAL DEVICES (CONTINUED)

Logical Device Number	Logical Device	Register Index	Base I/O Range (Note 23-7)	Fixed Base Offsets
0x0E	Serial Port 6 **APPROPRIATE DEVICES ONLY SEE CAUTION IN** Section 23.1, "Configuration Registers"	0x60,0x61	[0x0100:0x0FF8] ON 8 BYTE BOUNDARIES	+0 : RB/TB/LSB div +1 : IER/MSB div +2 : IIR/FCR +3 : LCR +4 : MSR +5 : LSR +6 : MSR +7 : SCR
Config. Port	Config. Port	0x26, 0x27 (Note 23-8)	0x0100:0x0FFE On 2 byte boundaries	See Configuration Register Summary and Description. Accessed through the index and DATA ports located at the Configuration Port address and the Configuration Port address +1 respectively.

Note 23-7 This chip uses address bits [A11:A0] to decode the base address of each of its logical devices. This device performs 16 bit address qualification, therefore address bits [A15:A12] must be ‘0’.

Note 23-8 The Configuration Port is at either 0x02E, 0x04EE (for SYSOPT=0 and SYSOPT=1) at power up and can be relocated via CR26 and CR27.

TABLE 23-8: PRIMARY INTERRUPT SELECT REGISTER

Name	REG Index	Definition
Primary Interrupt Select Default=0x00 or 0x06 on VCC POR, VTR POR, PCI RESET and SOFT RESET	0x70 (R/W)	Bits[3:0] selects which interrupt is used for the primary Interrupt. 0x00= no interrupt selected 0x01= IRQ1 0x02= IRQ2/nSMI 0x03= IRQ3 0x04= IRQ4 0x05= IRQ5 0x06= IRQ6 0x07= IRQ7 0x08= IRQ8 0x09= IRQ9 0x0A= IRQ10 0x0B= IRQ11 0x0C= IRQ12 0x0D= IRQ13 0x0E= IRQ14 0x0F= IRQ15 **Note:** • All interrupts are edge high (except ECP/EPP) • nSMI is active low

Note 1: An Interrupt is activated by setting the Interrupt Request Level Select 0 register to a non-zero value AND:

- For the PP logical device by setting IRQE, bit D4 of the Control Port and in addition
- For the PP logical device in ECP mode by clearing serviceIntr, bit D2 of the ecr.
- For the Serial Port logical device by setting any combination of bits D0-D3 in the IER and by setting the OUT2 bit in the UART's Modem Control (MCR) Register.
- For the KYBD logical device (refer to Section 10.0, "8042 Keyboard Controller Description," on page 77).

2: IRQs are disabled if not used/selected by any Logical Device. Refer to Note 23-9 on page 206.

3: nSMI must be disabled to use IRQ2.

4: All IRQ’s are available in Serial IRQ mode.

TABLE 23-9: DMA CHANNEL SELECT

Name	REG Index	Definition
DMA Channel Select Default=0x02 or 0x04 **(See notes)** on VCC POR, VTR POR, PCI RESET and SOFT RESET	0x74 (R/W)	Bits[2:0] select the DMA Channel. 0x00= Reserved 0x01= DMA1 0x02= DMA2 0x03= DMA3 0x04-0x07= No DMA active

Note 1: A DMA channel is activated by setting the DMA Channel Select register to [0x01-0x03] AND:

2: For the PP logical device in ECP mode by setting dmaEn, bit D3 of the ecr.

3: The DMA channel must be disabled if not used/selected by any Logical Device. Refer to Note A.

4: The default value of the DMA Channel Select register for logical device 3 and 5 is 0x04.

Note 23-9 Logical Device IRQ and DMA Operation. IRQ and DMA Enable and Disable: Any time the IRQ or DMA channel for a logical block is disabled by a register bit in that logical block, the IRQ and/or DMA channel must be disabled. This is in addition to the IRQ and DMA channel disabled by the Configuration Registers (Active bit or address not valid).

Serial Ports:

Modem Control Register (MCR) Bit D2 (OUT2) - When OUT2 is a logic “0”, the serial port interrupt is disabled.

Disabling DMA Enable bit, disables DMA for UART2. Refer to the IrCC specification.

Parallel Port:

SPP and EPP modes: Control Port (Base+2) bit D4 (IRQE) set to “0”, IRQ is disabled.

ECP Mode:

- (DMA) dmaEn from ecr register. See table.
- IRQ - See table.

Mode (From ECG Register)		IRQ Controlled By	DMA Controlled By
000	PRINTER	IRQE	dmaEn
001	SPP	IRQE	dmaEn
010	FIFO	(on)	dmaEn
011	ECP	(on)	dmaEn
100	EPP	IRQE	dmaEn
101	RES	IRQE	dmaEn
110	TEST	(on)	dmaEn
111	CONFIG	IRQE	dmaEn

Keyboard Controller: Refer to the 8042 Keyboard Controller Description on page 77 **of this document.**

MCHP Defined Logical Device Configuration Registers

The MCHP Specific Logical Device Configuration Registers reset to their default values only on PCI resets generated by Vcc or VTR POR (as shown) or the PCI_RESET# signal. These registers are not affected by soft resets.

© 2016-2017 Microchip Technology Inc.

TABLE 23-10: PARALLEL PORT, LOGICAL DEVICE 3 [LOGICAL DEVICE NUMBER = 0X03]

Name	REG Index	Definition
PP Mode Register Default = 0x3C on VCC POR, VTR POR and PCI RESET	0xF0 R/W	Bits[2:0] Parallel Port Mode = 100 Printer Mode (default) = 000 Standard and Bi-directional (SPP) Mode = 001 EPP-1.9 and SPP Mode = 101 EPP-1.7 and SPP Mode = 010 ECP Mode = 011 ECP and EPP-1.9 Mode = 111 ECP and EPP-1.7 Mode Bit[6:3] ECP FIFO Threshold 0111b (default) Bit[7] PP Interrupt Type Not valid when the parallel port is in the Printer Mode (100) or the Standard & Bi-directional Mode (000). = 1 Pulsed Low, released to high-Z. = 0 IRQ follows nACK when parallel port in EPP Mode or [Printer, SPP, EPP] under ECP. IRQ level type when the parallel port is in ECP, TEST, or Centronics FIFO Mode.
PP Mode Register 2 Default = 0x00 on VCC POR, VTR POR and PCI RESET	0xF1 R/W	Bit [3:0] Reserved. Set to zero. Bit [4] TIMEOUT_SELECT = 0 TMOUT (EPP Status Reg.) cleared on write of ‘1’ to TMOUT. = 1 TMOUT cleared on trailing edge of read of EPP Status Reg. Bits[7:5] Reserved. Set to zero.

TABLE 23-11: SERIAL PORT 1, LOGICAL DEVICE 4 [LOGICAL DEVICE NUMBER = 0X04]

Name	REG Index	Definition
Serial Port 1 Mode Register Default = 0x00 on VCC POR, VTR POR and PCI RESET	0xF0 R/W	Bit[0] MIDI Mode = 0 MIDI support disabled (default) = 1 MIDI support enabled Bit[1] High Speed = 0 High Speed Disabled (default) = 1 High Speed Enabled Bit [3:2] Enhanced Frequency Select = 00 Standard Mode (default) = 01 Select 921K = 10 Select 1.5M = 11 Reserved Bit[5:4] Reserved, set to zero Bit[6] All Share IRQ =0 Use bit 7 to determine sharing =1 Share all serial ports on the SCH3227/SCH3226/SCH3224/SCH3222 device. Bit[7]: Share IRQ =0 UARTs 1,2 use different IRQs =1 UARTs 1,2 share a common IRQ (Note 23-10)

Note 23-10 To properly share and IRQ:

- Configure UART1 (or UART2) to use the desired IRQ.
- Configure UART2 (or UART1) to use No IRQ selected.
- Set the share IRQ bit.

Note: If both UARTs are configured to use different IRQs and the share IRQ bit is set, then both of the UART IRQs will assert when either UART generates an interrupt.

TABLE 23-12: SERIAL PORT 2. LOGICAL DEVICE 5 [LOGICAL DEVICE NUMBER = 0X05]

Name	REG Index	Definition
Serial Port 2 Mode Register Default = 0x00 on VCC POR, VTR POR and PCI RESET	0xF0 R/W	Bit[0] MIDI Mode = 0 MIDI support disabled (default) = 1 MIDI support enabled Bit[1] High Speed = 0 High Speed Disabled(default) = 1 High Speed Enabled Bit [3:2] Enhanced Frequency Select = 00 Standard Mode (default) = 01 Select 921K = 10 Select 1.5M = 11 Reserved Bit[4] Reserved, set to zero Bit[5] TXD2_MODE (See Note 23-11.) =0 TXD2 pin reflects current configuration state =1 Override current pin configuration and force TXD2 pin tristate. Bits[7:6] Reserved. Set to zero.
IR Option Register Default = 0x02 on VCC POR, VTR POR and PCI RESET	0xF1 R/W	Bit[0] Receive Polarity = 0 Active High (Default) = 1 Active Low Bit[1] Transmit Polarity = 0 Active High = 1 Active Low (Default) Bit[2] Duplex Select = 0 Full Duplex (Default) = 1 Half Duplex Bits[5:3] IR Mode = 000 Standard COM Functionality (Default) = 001 IrDA = 010 ASK-IR = 011 Reserved = 1xx Reserved Bit[6] Reserved Set to 0. Bit[7] Reserved, write 0.
IR Half Duplex Timeout Default = 0x03 on VCC POR, VTR POR and PCI RESET	0xF2	Bits [7:0] These bits set the half duplex time-out for the IR port. This value is 0 to 10msec in 100usec increments. 0= blank during transmit/receive 1= blank during transmit/receive + 100usec

Note 23-11 The TXD2_MODE bit is a VTR powered bit that is reset on VTR POR only.

© 2016-2017 Microchip Technology Inc.

TABLE 23-13: KYBD. LOGICAL DEVICE 7 [LOGICAL DEVICE NUMBER = 0X07]

Name	REG Index	Definition
KRST_GA20 Default = 0x00 on VCC POR, VTR POR and PCI RESET Bits[6:5] reset on VTR POR only	0xF0 R/W	KRESET and GateA20 Select Bit[7] Polarity Select for P12 = 0 P12 active low (default) = 1 P12 active high Bit[6] M_ISO. Enables/disables isolation of mouse signals into 8042. Does not affect MDAT signal to mouse wakeup (PME) logic. 1= block mouse clock and data signals into 8042 0= do not block mouse clock and data signals into 8042 Bit[5] K_ISO. Enables/disables isolation of keyboard signals into 8042. Does not affect KDAT signal to keyboard wakeup (PME) logic. 1= block keyboard clock and data signals into 8042 0= do not block keyboard clock and data signals into 8042 Bit[4] MLATCH = 0 MINT is the 8042 MINT ANDed with Latched MINT (default) = 1 MINT is the latched 8042 MINT Bit[3] KLATCH = 0 KINT is the 8042 KINT ANDed with Latched KINT (default) = 1 KINT is the latched 8042 KINT Bit[2] Port 92 Select = 0 Port 92 Disabled = 1 Port 92 Enabled Bit[1] Reserved (read/write bit) Bit[0] Reserved (read/write bit)

TABLE 23-14: LOGICAL DEVICE A [LOGICAL DEVICE NUMBER = 0X0A]

Name	REG Index	Definition
CLOCKI32 Default = 0x00 on VTR POR	0xF0 (R/W)	Bit[0] (CLK32_PRSN) 0 = 32kHz clock is connected to the CLKI32 pin (default) 1 = 32kHz clock is not connected to the CLKI32 pin (pin is grounded) Bit[1] SPEKEY_EN. This bit is used to turn the logic for the “wake on specific key” feature on and off. It will disable the 32kHz clock input to the logic when turned off. The logic will draw no power when disabled. 0 = “Wake on specific key” logic is on (default) 1 = “Wake on specific key” logic is off Bit[2] Reserved (read-only bit) Reads return 0. Writes have no effect. Bit[3] SPEMSE_EN This bit is used to turn the logic for the “wake on specific mouse click” feature on and off. It will disable the 32 Khz clock input to the logic when turned off. The logic will draw no power when disabled. 0 = “wake on specific mouse click” logic is on (default) 1 = “wake on specific mouse click” logic is off Bits[7:4] are reserved
Reserved Register Default = 0x00 on VCC POR, VTR POR and PCI RESET	0xF1 R/W	Bits[7:0] Reserved. Set to zero.
Security Key Control (SKC) Register Default=0x04 on a VTR POR, VCC POR, PCI Reset	0xF2 R/W when bit[0]= 0 Read-Only when bit[0]=1	Bit[0] SKC Register Lock This bit blocks write access to the Security Key Control Register. 0 = Security Key Control Register is a Read/Write register (default) 1 = Security Key Control Register is a Read-Only register Bit[1] Read-Lock This bit prevents reads from the Security Key registers located at an offset from the Secondary Base I/O address in Logical Device A 0 = Permits read operations in the Security Key block (default) 1 = Prevents read operations in the Security Key block (Reads return 00h.) Bit[2] Write-Lock This bit prevents writes to the Security Key registers located at an offset from the Secondary Base I/O address in Logical Device A 0 = Permits write operations in the Security Key block 1 = Prevents write operations in the Security Key block (default) Bit[3] Reserved Bit[4] Reserved Bit[5] Reserved Bit[6] Reserved Bit[7] Reserved

Note: The registers located in Logical Device A are runtime registers.

© 2016-2017 Microchip Technology Inc.

TABLE 23-15: SERIAL PORT 3, LOGICAL DEVICE B [LOGICAL DEVICE NUMBER = 0X0B]

Name	REG Index	Definition
Serial Port 3 Mode Register Default = 0x00 on VCC POR, VTR POR and PCI RESET SCH3224 device.	0xF0 R/W	Bit[7:0] MCHP Test Bit Must be written with zero for proper operation.
Serial Port 3 Mode Register Default = 0x00 on VCC POR, VTR POR and PCI RESET SCH3227, SCH3226 and SCH3222 devices.	0xF0 R/W	Bit[0] MIDI Mode = 0 MIDI support disabled (default) = 1 MIDI support enabled Bit[1] High Speed = 0 High Speed Disabled (default) = 1 High Speed Enabled Bit [3:2] Enhanced Frequency Select = 00 Standard Mode (default) = 01 Select 921K = 10 Select 1.5M = 11 Reserved Bit[5:4] Reserved, set to zero Bit[6] MCHP Test Bit Must be written with zero for proper operation. Bit[7]: Share IRQ =0 UARTs 3,4 use different IRQs =1 UARTs 3,4 share a common IRQ (Note 23-10)

TABLE 23-16: SERIAL PORT 4, LOGICAL DEVICE C LOGICAL DEVICE NUMBER = 0X0C]

Name	REG Index	Definition
Serial Port 4 Mode Register Default = 0x00 on VCC POR, VTR POR and PCI RESET SCH3224 device.	0xF0 R/W	Bit[7:0] MCHP Test Bit Must be written with zero for proper operation.
Serial Port 4 Mode Register Default = 0x00 on VCC POR, VTR POR and PCI RESET SCH3227, SCH3226 and SCH3222 devices.	0xF0 R/W	Bit[0] MIDI Mode = 0 MIDI support disabled (default) = 1 MIDI support enabled Bit[1] High Speed = 0 High Speed Disabled(default) = 1 High Speed Enabled Bit [3:2] Enhanced Frequency Select = 00 Standard Mode (default) = 01 Select 921K = 10 Select 1.5M = 11 Reserved Bit[5:4] Reserved, set to zero Bit[7:6] MCHP Test Bit Must be written with zero for proper operation.

TABLE 23-17: SERIAL PORT 5, LOGICAL DEVICE D [LOGICAL DEVICE NUMBER = 0X0D]

Name	REG Index	Definition
Serial Port 5 Mode Register Default = 0x00 on VCC POR, VTR POR and PCI RESET	0xF0 R/W	Bit[0] MIDI Mode = 0 MIDI support disabled (default) = 1 MIDI support enabled Bit[1] High Speed = 0 High Speed Disabled (default) = 1 High Speed Enabled Bit [3:2] Enhanced Frequency Select = 00 Standard Mode (default) = 01 Select 921K = 10 Select 1.5M = 11 Reserved Bit[5:4] Reserved, set to zero Bit[6] MCHP Test Bit Must be written with zero for proper operation. Bit[7]: Share IRQ =0 UARTs 5,6 use different IRQs =1 UARTs 5,6 share a common IRQ (Note 23-10)

TABLE 23-18: SERIAL PORT 6, LOGICAL DEVICE E LOGICAL DEVICE NUMBER = 0X0E]

Name	REG Index	Definition
Serial Port 6 Mode Register Default = 0x00 on VCC POR, VTR POR and PCI RESET	0xF0 R/W	Bit[0] MIDI Mode = 0 MIDI support disabled (default) = 1 MIDI support enabled Bit[1] High Speed = 0 High Speed Disabled(default) = 1 High Speed Enabled Bit [3:2] Enhanced Frequency Select = 00 Standard Mode (default) = 01 Select 921K = 10 Select 1.5M = 11 Reserved Bit[5:4] Reserved, set to zero Bit[7:6] MCHP Test Bit Must be written with zero for proper operation.

© 2016-2017 Microchip Technology Inc.

24.0 RUNTIME REGISTER

CAUTION: This device architecture contains registers, controlling GPIOs or other pin features that may not be brought out to package pins in some specific family members. See Table 2-1 SCH3227, Table 2-2 SCH3226, Table 2-3 SCH3224, or Table 2-4 SCH3222, for the pins that are brought out. Pins which are not brought out must not be used because they are tied to known states internally. Do not change their configurations from their POR defaults, because doing so may cause unpredictable behavior and/or excessive currents, and therefore may damage the device and/or the system.

24.1 Runtime Register

The following registers are runtime registers in the SCH322x. They are located at the address programmed in the Base I/O Address in Logical Device A (also referred to as the Runtime Register) at the offset shown. These registers are powered by VTR.

Table 24-1 summarizes the runtime register differences between the SCH3227/SCH3226/SCH3224/SCH3222 family member devices. Table 24-2 gives the POR information for each of the registers. A complete description of each of the registers is given in Section 24.2, "Runtime Register Description," on page 221.

TABLE 24-1: SCH322X RUNTIME REGISTER SUMMARY

Register Offset (HEX)	SCH3222 Register	SCH3224 Register	SCH3226, SCH3227 Register
00	PME_STS	PME_STS	PME_STS
01	Reserved – reads return 0	Reserved – reads return 0	Reserved – reads return 0
02	PME_EN	PME_EN	PME_EN
03	Reserved – reads return 0	Reserved – reads return 0	Reserved – reads return 0
04	PME_STS1	PME_STS1	PME_STS1
05	PME_STS3	PME_STS3	PME_STS3
06	PME_STS5 (Note 24-1)	PME_STS5 (Note 24-1)	PME_STS5 (Note 24-1)
07	PME_STS6	PME_STS6	PME_STS6 (Note 24-2)
08	PME_EN1	PME_EN1	PME_EN1
09	PME_EN3	PME_EN3	PME_EN3
0A	PME_EN5	PME_EN5	PME_EN5
0B	PME_EN6	PME_EN6	PME_EN6 (Note 24-2)
0C	PME_STS7 (Note 24-3)	PME_STS7 (Note 24-3)	PME_STS7 (Note 24-3)
0D	Reserved – reads return 0	Reserved – reads return 0	Reserved – reads return 0
0E	Reserved – reads return 0	Reserved – reads return 0	Reserved – reads return 0
0F	Reserved – reads return 0	Reserved – reads return 0	Reserved – reads return 0
10	PME_EN7 (Note 24-3)	PME_EN7 (Note 24-3)	PME_EN7 (Note 24-3)
11	Reserved – reads return 0	Reserved – reads return 0	Reserved – reads return 0
12	SP12	SP12	SP12
13	Reserved – reads return 0	SP34	SP34
14	SMI_STS1	SMI_STS1	SMI_STS1
15	SMI_STS2	SMI_STS2	SMI_STS2
16	SMI_STS3	SMI_STS3	SMI_STS3
17	SMI_STS4 (Note 24-4)	SMI_STS4 (Note 24-4)	SMI_STS4 (Note 24-4)
18	SMI_EN1	SMI_EN1	SMI_EN1
19	SMI_EN2	SMI_EN2	SMI_EN2
1A	SMI_EN3	SMI_EN3	SMI_EN3
1B	SMI_EN4 (Note 24-4)	SMI_EN4 (Note 24-4)	SMI_EN4 (Note 24-4)

© 2016-2017 Microchip Technology Inc.

TABLE 24-1: SCH322X RUNTIME REGISTER SUMMARY (CONTINUED)

Register Offset (HEX)	SCH3222 Register	SCH3224 Register	SCH3226, SCH3227 Register
1C	MSC_STS	MSC_STS	MSC_STS
1D	RESGEN	RESGEN	RESGEN
1E	Reserved	Reserved	Reserved
1F	Reserved	Reserved	Reserved
20	UART1 FIFO Control Shadow	UART1 FIFO Control Shadow	UART1 FIFO Control Shadow
21	UART2 FIFO Control Shadow	UART2 FIFO Control Shadow	UART2 FIFO Control Shadow
22	UART3 FIFO Control Shadow	Reserved - Indeterminate	UART3 FIFO Control Shadow
23	GP10	GP10 (Note 24-6)	GP10 (Note 24-6)
24	GP11	GP11 (Note 24-6)	GP11 (Note 24-6)
25	GP12	GP12 (Note 24-6)	GP12 (Note 24-6)
26	GP13	GP13 (Note 24-6)	GP13 (Note 24-6)
27	GP14	GP14 (Note 24-6)	GP14 (Note 24-6)
28	UART4 FIFO Control Shadow	Reserved - Indeterminate	UART4 FIFO Control Shadow
29	GP15	GP15 (Note 24-6)	GP15 (Note 24-6)
2A	GP16	GP16 (Note 24-6)	GP16 (Note 24-6)
2B	GP17	GP17 (Note 24-6)	GP17 (Note 24-6)
2C	GP21	GP21	GP21
2D	GP22	GP22	GP22
2E	UART5 FIFO Control Shadow	UART5 FIFO Control Shadow	If STRAPOPT=1: UART5 FIFO Control Shadow If STRAPOPT=0: Reserved
2F	UART6 FIFO Control Shadow	UART6 FIFO Control Shadow	If STRAPOPT=1: UART6 FIFO Control Shadow If STRAPOPT=0: Reserved
30	SP5 Option	SP5 Option	If STRAPOPT=1: SP5 Option If STRAPOPT=0: Reserved
31	SP6 Option	SP6 Option	If STRAPOPT=1: SP6 Option If STRAPOPT=0: Reserved
32	GP27	GP27	GP27
33	GP30	GP30	GP30
34	GP31	GP31(Note 24-6)	GP31(Note 24-6)
35	GP32	GP32	GP32
36	GP33	GP33	GP33
37	GP34	GP34 (Note 24-6)	GP34 (Note 24-6)
38	Reserved	Reserved	Reserved
39	GP36	GP36	GP36
3A	GP37	GP37	GP37
3B	GP40	GP40	GP40
3C	CLK_OUT Register	CLK_OUT Register	CLK_OUT Register
3D	GP42	GP42	GP42
3E	Reserved – reads return 0	Reserved – reads return 0	Reserved – reads return 0
3F	GP50	GP50	GP50

© 2016-2017 Microchip Technology Inc.

TABLE 24-1: SCH322X RUNTIME REGISTER SUMMARY (CONTINUED)

Register Offset (HEX)	SCH3222 Register	SCH3224 Register	SCH3226, SCH3227 Register
40	GP51	GP51	GP51
41	GP52	GP52	GP52
42	GP53	GP53	GP53
43	GP54	GP54	GP54
44	GP55	GP55	GP55
45	GP56	GP56	GP56
46	GP57	GP57	GP57
47	GP60	GP60	GP60
48	GP61	GP61	GP61
49	PWR_REC	PWR_REC	Reserved – reads return 0 (Note 24-2)
4A	PS_ON Register	PS_ON Register	Reserved – reads return 0 (Note 24-2)
4B	GP1	GP1	GP1
4C	GP2	GP2	GP2
4D	GP3	GP3	GP3
4E	GP4	GP4	GP4
4F	GP5	GP5	GP5
50	GP6	GP6	GP6
51	Reserved – reads return 0	Reserved – reads return 0	Reserved – reads return 0
52	Reserved – reads return 0	Reserved – reads return 0	Reserved – reads return 0
53	PS_ON# Previous State	PS_ON# Previous State	If STRAPOPT=0: PS_ON# Previous State If STRAPOPT=1: Reserved – reads return 0, and Note 24-2 applies.
54	GP62	GP62 (Note 24-6)	GP62 (Note 24-6)
55	GP63	GP63 (Note 24-6)	GP63 (Note 24-6)
56	GP64	GP64(Note 24-6)	GP64(Note 24-6)
57	GP65	GP65(Note 24-6)	GP65(Note 24-6)
58	GP66	GP66(Note 24-6)	GP66(Note 24-6)
59	GP67	GP67 (Note 24-6)	GP67 (Note 24-6)
5A	TEST	TEST	TEST
5B	DBLCLICK	DBLCLICK	DBLCLICK
5C	Mouse_Specific_ Wake	Mouse_Specific_ Wake	Mouse_Specific_ Wake
5D	LED1	LED1	LED1
5E	LED2	LED2	LED2
5F	Keyboard Scan Code – Make Byte 1	Keyboard Scan Code – Make Byte 1	Keyboard Scan Code – Make Byte 1
60	Keyboard Scan Code – Make Byte 2	Keyboard Scan Code – Make Byte 2	Keyboard Scan Code – Make Byte 2
61	Keyboard Scan Code – Break Byte 1	Keyboard Scan Code – Break Byte 1	Keyboard Scan Code – Break Byte 1
62	Keyboard Scan Code – Break Byte 2	Keyboard Scan Code – Break Byte 2	Keyboard Scan Code – Break Byte 2

© 2016-2017 Microchip Technology Inc.

TABLE 24-1: SCH322X RUNTIME REGISTER SUMMARY (CONTINUED)

Register Offset (HEX)	SCH3222 Register	SCH3224 Register	SCH3226, SCH3227 Register
63	Keyboard Scan Code – Break Byte 3	Keyboard Scan Code – Break Byte 3	Keyboard Scan Code – Break Byte 3
64	Keyboard PWRBTN/SPEKEY	Keyboard PWRBTN/SPEKEY	Keyboard PWRBTN/SPEKEY
65	WDT_TIME_OUT	WDT_TIME_OUT	WDT_TIME_OUT
66	WDT_VAL	WDT_VAL	WDT_VAL
67	WDT_CFG	WDT_CFG	WDT_CFG
68	WDT_CTRL	WDT_CTRL	WDT_CTRL
69	Reserved – reads return 0	Reserved – reads return 0	Reserved – reads return 0
6A	Reserved – reads return 0	Reserved – reads return 0	Reserved – reads return 0
6B	Reserved – reads return 0	Reserved – reads return 0	Reserved – reads return 0
6C	Reserved – reads return 0	Reserved – reads return 0	Reserved – reads return 0
6D	Reserved – reads return 0	Reserved – reads return 0	Reserved – reads return 0
6E	Reserved – reads return 0	Reserved – reads return 0	Reserved – reads return 0
6F	GP45 (Note 24-7)	GP45 (Note 24-7)	GP45 (Note 24-8)
70	Reserved - do not write.	HWM Index Register	HWM Index Register
71	Reserved - do not write.	HWM Data Register	HWM Data Register
72	GP46 (Note 24-7)	GP46 (Note 24-7)	GP46 (Note 24-8)
73	GP47 (Note 24-7)	GP47 (Note 24-7)	GP47 (Note 24-8)
74-7Fh	Reserved – reads return 0	Reserved – reads return 0	Reserved – reads return 0

TABLE 24-2: RUNTIME REGISTER POR SUMMARY

Register Offset (HEX)	Type	PCI Reset	VCC POR	VTR POR	Soft Reset	Vbat POR	Register
00	R/WC	-	-	0x00	-	-	PME_STS
01	R	-	-	-	-	-	Reserved – reads return 0
02	R/W	-	-	0x00	-	-	PME_EN
03	R	-	-	-	-	-	Reserved – reads return 0
04	R/WC	-	-	0x00	-	-	PME_STS1
05	R/WC	-	-	0x00	-	-	PME_STS3
06	R/WC	-	-	0x00	-	-	PME_STS5 (Note 24-1)
07	R/WC	-	-	Note 24-9	-	-	PME_STS6
08	R/W	-	-	0x00)	-	-	PME_EN1
09	R/W	-	-	0x00	-	-	PME_EN3
0A	R/W	-	-	0x00	-	-	PME_EN5
0B	R/W	-	-	0x00	-	-	PME_EN6
0C	R/WC	-	-	0x00	-	-	PME_STS7
0D	R	-	-	-	-	-	Reserved – reads return 0
0E	R	-	-	-	-	-	Reserved – reads return 0
0F	R	-	-	-	-	-	Reserved – reads return 0
10	R/W	-	-	0x00	-		PME_EN7
11	R	-	-	0x00	-		RESERVED
12	R/W	-	-	0x44	-		SP12
13	R	-	-	0x00	-		RESERVED (SCH3224)

© 2016-2017 Microchip Technology Inc.

TABLE 24-2: RUNTIME REGISTER POR SUMMARY (CONTINUED)

Register Offset (HEX)	Type	PCI Reset	VCC POR	VTR POR	Soft Reset	Vbat POR	Register
13	R/W	-	-	0x00	-		SP34 (SCH3227, SCH3226, SCH3222)
14	Note 2 4-16	-	-	Note 24-9	-	-	SMI_STS1
15	Note 2 4-16	-	-	0x00	-	-	SMI_STS2
16	R/WC	-	-	0x00	-	-	SMI_STS3
17	R/WC	-	-	0x00	-	-	SMI_STS4
18	R/W	-	-	0x00	-	-	SMI_EN1
19	R/W	-	-	0x00	-	-	SMI_EN2
1A	R/W	-	-	0x00	-	-	SMI_EN3
1B	R/W	-	-	0x00	-	-	SMI_EN4
1C	R/W	-	-	0x00	-	-	MSC_STS
1D	R/W	-	-	0x00	-	-	RESGEN
1E	R/W	0x03	0x03	0x03	-	-	RESERVED
1F	R	-	-	-	-	-	RESERVED
20	R	-	-	-	-	-	UART1 FIFO Control Shadow
21	R	-	-	-	-	-	UART2 FIFO Control Shadow
22	R	-	-	-	-	-	RESERVED (SCH3224)
22	R	-	-	-	-	-	UART3 FIFO Control Shadow (SCH3227, SCH3226, SCH3222)
23	R/W	-	-	0x01	-	-	GP10
24	R/W	-	-	0x01	-	-	GP11
25	R/W	-	-	0x01	-	-	GP12
26	R/W	-	-	0x01	-	-	GP13
27	R/W	-	-	0x01	-	-	GP14
28	R	-	-	0x00	-	-	RESERVED (SCH3224)
28	R	-	-	0x00	-	-	UART4 FIFO Control Shadow (SCH3227, SCH3226, SCH3222)
29	R	-	-	0x01	-	-	GP15
2A	R	-	-	0x01	-	-	GP16
2B	R	-	-	0x01	-	-	GP17
2C	R/W	-	-	0x8C	-	-	GP21
2D	R/W	-	-	0x8C	-	-	GP22
2E	R	-	-	0x00	-	-	UART5 FIFO Control Shadow
2F	R	-	-	0x00	-	-	UART6 FIFO Control Shadow
30	R/W	-	-	0x04	-	-	SP5 Option
31	R/W	-	-	0x04	-	-	SP6 Option
32	R/W	-	-	0x01	-	-	GP27
33	R/W	-	-	0x05	-	-	GP30
34	R/W	-	-	0x01	-	-	GP31
35	R/W	-	-	0x84	-	-	GP32

© 2016-2017 Microchip Technology Inc.

TABLE 24-2: RUNTIME REGISTER POR SUMMARY (CONTINUED)

Register Offset (HEX)	Type	PCI Reset	VCC POR	VTR POR	Soft Reset	Vbat POR	Register
36	R/W	-	-	0x84	-	-	GP33
37	R/W	-	-	0x01	-	-	GP34
38	R	-	-	-	-	-	Reserved
39	R/W	-	-	0x01	-	-	GP36
3A	R/W	-	-	0x01	-	-	GP37
3B	R/W	-	-	0x01	-	-	GP40
3C	R	-	-	0x00	-	-	CLK_OUT Register
3D	R/W	-	-	0x01	-	-	GP42
3E	R	-	-	-	-	-	Reserved – reads return 0
3F	R/W	-	-	0x01	-	-	GP50
40	R/W	-	-	0x01	-	-	GP51
41	R/W	-	-	0x01	-	-	GP52
42	R/W	-	-	0x01	-	-	GP53
43	R/W	-	-	0x01	-	-	GP54
44	R/W	-	-	0x01	-	-	GP55
45	R/W	-	-	0x01	-	-	GP56
46	R/W	-	-	0x01	-	-	GP57
47	R/W	-	-	0x01	-	-	GP60
48	R/W	-	-	0x01	-	-	GP61
49	Note 24-11	0xxxxxxxxb Note 24-12	-	0xxxxxx11b Note 24-12	-	0x00000xxb Note 24-12	PWR_REC (SCH3227 or SCH3226, and STRAPOPT=0)
49	R	0xxxxxxxxb Note 24-12	-	0xxxxxx11b Note 24-12	-	0x00000xxb Note 24-12	RESERVED (SCH3222, SCH3224, or SCH3227 / SCH3226 with STRAPOPT=1)
4A	R	-	-	-	-	0x00	PS_ON Register (SCH3227 or SCH3226, and STRAPOPT=0)
4A	R	-	-	-	-	0x00	RESERVED (SCH3222, SCH3224, or SCH3227 / SCH3226 with STRAPOPT=1)
4B	R/W	-	-	0x00	-	-	GP1
4C	R/W	-	-	0x00	-	-	GP2
4D	R/W	-	-	0x00	-	-	GP3
4E	R/W	-	-	0x00	-	-	GP4
4F	R/W	-	-	0x00	-	-	GP5
50	R/W	-	-	0x00	-	-	GP6
51	R	-	-	-	-	-	Reserved – reads return 0
52	R	-	-	-	-	-	Reserved – reads return 0
53	R/W	-	-	-	-	0x00	PS_ON# Previous State (SCH3227 or SCH3226, and STRAPOPT=0)
53	R	-	-	-	-	0x00	RESERVED (SCH3222, SCH3224, or SCH3227 / SCH3226 with STRAPOPT=1)

© 2016-2017 Microchip Technology Inc.

TABLE 24-2: RUNTIME REGISTER POR SUMMARY (CONTINUED)

Register Offset (HEX)	Type	PCI Reset	VCC POR	VTR POR	Soft Reset	Vbat POR	Register
54	R	-	-	0x01	-	-	GP62
55	R	-	-	0x01	-	-	GP63
56	R	-	-	0x01	-	-	GP64
57	R	-	-	0x01	-	-	GP65
58	R	-	-	0x01	-	-	GP66
59	R	-	-	0x01	-	-	GP67
5A	R	-	-	-	-	-	TEST
5B	Note 24-17	-	-	-	-	0x0C	DBLCLICK
5C	Note 24-17	Note 24-9	Note 24-9	Note 24-9	-	-	Mouse_Specific_ Wake
5D	R/W	-	-	0x00	-	-	LED1
5E	R/W	-	-	0x00	-	-	LED2
5F	Note 24-13	-	-	-	-	0xE0	Keyboard Scan Code – Make Byte 1
60	Note 24-13	-	-	-	-	0x37	Keyboard Scan Code – Make Byte 2
61	Note 24-13	-	-	-	-	0xE0	Keyboard Scan Code – Break Byte 1
62	Note 24-13	-	-	-	-	0xF0	Keyboard Scan Code – Break Byte 2
63	Note 24-13	-	-	-	-	0x37	Keyboard Scan Code – Break Byte 3
64	Note 24-13	Note 24-9	Note 24-9	Note 24-9	-	Note 24-9	Keyboard PWRBTN/SPEKEY
65	R/W	0x00	0x00	0x00	-	-	WDT_TIME_OUT
66	R/W	0x00	0x00	0x00	-	-	WDT_VAL
67	R/W	0x00	0x00	0x00	-	-	WDT_CFG
68	R/W Note 24-15	0x00 Note 24-14	0x00	0x00	-	-	WDT_CTRL
69	R	-	-	-	-	-	Reserved – reads return 0
6A	R	-	-	-	-	-	Reserved – reads return 0
6B	R	-	-	-	-	-	Reserved – reads return 0
6C	R	-	-	-	-	-	Reserved – reads return 0
6D	R	-	-	-	-	-	Reserved – reads return 0
6E	R	-	-	-	-	-	Reserved – reads return 0 (SCH3227 or SCH3226, and STRAPOPT=0)
6E	R/W	-	-	0x01	-	-	GP44 (SCH3222, SCH3224, or SCH3227 / SCH3226 with STRAPOPT=1)
6F	R/W	-	-	0x00	-	-	GP45 (SCH3227 or SCH3226, and STRAPOPT=0)
6F	R/W	-	-	0x01	-	-	GP45 (SCH3222, SCH3224, or SCH3227 / SCH3226 with STRAPOPT=1)

TABLE 24-2: RUNTIME REGISTER POR SUMMARY (CONTINUED)

Register Offset (HEX)	Type	PCI Reset	VCC POR	VTR POR	Soft Reset	Vbat POR	Register
70	R/W	-	-	0x00	-	-	HWM Index Register (RESERVED in SCH3222)
71	R/W	-	-	0x00	-	-	HWM Data Register (RESERVED in SCH3222)
72	R/W	-	-	0x00	-	-	GP46 (SCH3227 or SCH3226, and STRAPOPT=0)
72	R/W	-	-	0x01	-	-	GP46 (SCH3222, SCH3224, or SCH3227 / SCH3226 with STRAPOPT=1)
73	R/W	-	-	0x00	-	-	GP47 (SCH3227 or SCH3226, and STRAPOPT=0)
73	R/W	-	-	0x01	-	-	GP47 (SCH3222, SCH3224, or SCH3227 / SCH3226 with STRAPOPT=1)
74-7Fh	R	-	-	-	-	-	Reserved – reads return 0

Note 24-1 Bit 3 of the PME_STS5 register may be set on a VCC POR. If GP53 are configured as input, then their corresponding PME and SMI status bits will be set on a VCC POR.

Note 24-2 This register does not support the Power failure recovery status.

Note 24-3 This register supports ring indicator status bits for serial ports 3-6 if required by the particular device.

Note 24-4 This register supports additional UART interrupt status bits for serial ports 3-6 if required by the particular device

Note 24-5 This register supports alternate functions for serial port 3.

Note 24-6 This register supports alternate functions for serial port 4.

Note 24-7 This register supports alternate functions for pci reset outputs.

Note 24-8 This register supports alternate functions for serial port 6.

Note 24-9 See the register description for the default value.

Note 24-10 Bit[0] cannot be written to '1'. Bit[1] and Bit[7] are read-only.

Note 24-11 This register is a read/write register when bit[7]=0, except bit[4]. Bit[4] is a read-only bit. This register is a read-only register when bit7]=1.

Note 24-12 This is a binary number. The x's denote a bit that is not affected by the reset condition.

Note 24-13 This register is read/write when Bit [7] Keyboard PWRBTN/SPEKEY Lock of the Keyboard PWRBTN/SPEKEY register at offset 64h is set to '0' and Read-Only when Bit [7] is set to '1'.

Note 24-14 Bit 0 is not cleared by PCI RESET.

Note 24-15 This register contains some bits that are read or write only.

Note 24-16 See the register description for the bit-wise access type.

Note 24-17 This register is read/write when Bit [7] in the Mouse_Specific_ Wake Register is set to '0' and Read-Only when Bit [7] is set to '1'.

© 2016-2017 Microchip Technology Inc.

24.2 Runtime Register Description

The following registers are located at an offset from (PME_BLK) the address programmed into the base I/O address register for Logical Device A.

TABLE 24-3: DETAILED RUNTIME REGISTER DESCRIPTION

Name	REG Offset (HEX)	Description
PME_STS Default = 0x00 on VTR POR	00 (R/WC)	PME Pin Status Register Bit[0] PME_Status = 0 (default) = 1 Autonomously Set when a wakeup event occurs that normally asserts the nIO_PME signal. This bit is set independent of the state of the PME_EN bit Bit[7:1] Reserved PME_Status is not affected by Vcc POR, SOFT RESET or PCI RESET. Writing a “1” to PME_Status will clear it and cause the device to stop asserting nIO_PME, in enabled. Writing a “0” to PME_Status has no effect.
PME_EN Default = 0x00 on VTR POR	02 (R/W)	PME Pin Enable Register Bit[0] PME_En = 0 nIO_PME signal assertion is disabled (default) = 1 Enables this device to assert nIO_PME signal Bit[7:1] Reserved PME_En is not affected by Vcc POR, SOFT RESET or PCI RESET
PME_STS1 Default = 0x00 on VTR POR	04 (R/WC)	PME Wake Status Register 1 This register indicates the state of the individual PME wake sources, independent of the individual source enables or the PME_EN bit. If the wake source has asserted a wake event, the associated PME Wake Status bit will be a “1”. If enabled, any set bit in this register asserts the nIO_PME pin. Bit[0] HW_Monitor Bit[1] RI2 Bit[2] RI1 Bit[3] KBD Bit[4] MOUSE Bit[5] Reserved Bit[6] IRINT. This bit is set by a transition on the IR pin (IRRX) Bit[7] Reserved The PME Wake Status register is not affected by Vcc POR, SOFT RESET or PCI RESET. Writing a “1” to Bit[7:0] will clear it. Writing a “0” to any bit in PME Wake Status Register has no effect.
PME_STS3 Default = 0x00 on VTR POR	05 (R/WC)	PME Wake Status Register 3 This register indicates the state of the individual PME wake sources, independent of the individual source enables or the PME_EN bit. If the wake source has asserted a wake event, the associated PME Wake Status bit will be a “1”. If enabled, any set bit in this register asserts the nIO_PME pin. Bit[0] WDT Bit[1] GP21 Bit[2] GP22 Bit[3] DEVINT_STS (status of group SMI signal for PME) Bit[4] GP27 Bit[5] GP32 Bit[6] GP33 Bit[7] Reserved The PME Wake Status register is not affected by Vcc POR, SOFT RESET or PCI RESET. Writing a “1” to Bit[7:0] will clear it. Writing a “0” to any bit in PME Wake Status Register has no effect.

TABLE 24-3: DETAILED RUNTIME REGISTER DESCRIPTION (CONTINUED)

Name	REG Offset (HEX)	Description
PME_STS5 Default = 0x00 on VTR POR	06 (R/WC)	PME Wake Status Register 5 This register indicates the state of the individual PME wake sources, independent of the individual source enables or the PME_EN bit. If the wake source has asserted a wake event, the associated PME Wake Status bit will be a “1”. If enabled, any set bit in this register asserts the nIO_PME pin. Bit[0] GP50 Bit[1] GP51 Bit[2] GP52 Bit[3] GP53 Bit[4] GP54 Bit[5] GP55 Bit[6] GP56 Bit[7] GP57 The PME Wake Status register is not affected by Vcc POR, SOFT RESET or PCI RESET. Writing a “1” to Bit[7:0] will clear it. Writing a “0” to any bit in PME Wake Status Register has no effect.
PME_STS6 Default = 0x00 or 0x01 on VTR POR The default will be 0x01 if there is a LOW_BAT event under VBAT power only, 0x00 if the event does not occurs. Bit[0] will be set to ‘1’ on a VCC POR if the battery voltage drops below 2.4V under VTR power (VCC=0) or under battery power only. (SCH3227 or SCH3226, and STRAPOPT=0)	07 (R/WC)	This register indicates the state of the individual PME sources, independent of the individual source enables or the PME_EN bit. If the wake source has asserted a wake event, the associated PME Wake Status bit will be a “1”. If enabled, any set bit in this register asserts the nIO_PME pin. Bit[0] LOW_BAT, Cleared by a write of ‘1’. When the battery is removed and replaced or the if the battery voltage drops below 1.2V under battery power, then the LOW_BAT PME status bit is set on VTR POR. When the battery voltage drops below 2.4 volts under VTR power (VCC=0) or under battery power only, the LOW_BAT PME status bit is set on VCC POR. The corresponding enable bit must be set to generate a PME. The low battery event is not a PME wakeup event. Bit[1] RESERVED. Bit[2] GP60 Bit[3] GP61 Bit[4] SPEMSE_STS (Wake on specific mouse click) Bit[5] SPEKEY_STS (Wake on specific key) Bit[6] PB_STS Bit[7] PFR_STS Power Failure Recovery Status The PME Status register is not affected by VCC POR, SOFT RESET or PCI RESET. Writing a “1” to Bit[7:0] will clear it. Writing a “0” to any bit in PME Status Register has no effect.

© 2016-2017 Microchip Technology Inc.

TABLE 24-3: DETAILED RUNTIME REGISTER DESCRIPTION (CONTINUED)

Name	REG Offset (HEX)	Description
PME_STS6 Default = 0x00 or 0x01 on VTR POR The default will be 0x01 if there is a LOW_BAT event under VBAT power only, 0x00 if the event does not occurs. Bit[0] will be set to ‘1’ on a VCC POR if the battery voltage drops below 2.4V under VTR power (VCC=0) or under battery power only. (SCH3222, SCH3224, or SCH3227 / SCH3226 with STRAPOPT=1)	07 (R/WC)	This register indicates the state of the individual PME sources, independent of the individual source enables or the PME_EN bit. If the wake source has asserted a wake event, the associated PME Wake Status bit will be a “1”. If enabled, any set bit in this register asserts the nIO_PME pin. Bit[0] LOW_BAT, Cleared by a write of ‘1’. When the battery is removed and replaced or the if the battery voltage drops below 1.2V under battery power, then the LOW_BAT PME status bit is set on VTR POR. When the battery voltage drops below 2.4 volts under VTR power (VCC=0) or under battery power only, the LOW_BAT PME status bit is set on VCC POR. The corresponding enable bit must be set to generate a PME. The low battery event is not a PME wakeup event. Bit[1] RESERVED. Bit[2] GP60 Bit[3] GP61 Bit[4] SPEMSE_STS (Wake on specific mouse click) Bit[5] SPEKEY_STS (Wake on specific key) Bit[6] PB_STS Bit[7] Reserved The PME Status register is not affected by VCC POR, SOFT RESET or PCI RESET. Writing a “1” to Bit[7:0] will clear it. Writing a “0” to any bit in PME Status Register has no effect.
PME_EN1 Default = 0x00 on VTR POR	08 (R/W)	PME Wake Enable Register 1 This register is used to enable individual PME wake sources onto the nIO_PME wake bus. When the PME Wake Enable register bit for a wake source is active (“1”), if the source asserts a wake event so that the associated status bit is “1” and the PME_EN bit is “1”, the source will assert the nIO_PME signal. When the PME Wake Enable register bit for a wake source is inactive (“0”), the PME Wake Status register will indicate the state of the wake source but will not assert the nIO_PME signal. Bit[0] HW_Monitor Bit[1] RI2 Bit[2] RI1 Bit[3] KBD Bit[4] MOUSE Bit[5] Reserved Bit[6] IRINT Bit[7] Reserved The PME Wake Enable register is not affected by Vcc POR, SOFT RESET or PCI RESET.
PME_EN3 Default = 0x00 on VTR POR	09 (R/W)	PME Wake Status Register 3 This register is used to enable individual PME wake sources onto the nIO_PME wake bus. When the PME Wake Enable register bit for a wake source is active (“1”), if the source asserts a wake event so that the associated status bit is “1” and the PME_EN bit is “1”, the source will assert the nIO_PME signal. When the PME Wake Enable register bit for a wake source is inactive (“0”), the PME Wake Status register will indicate the state of the wake source but will not assert the nIO_PME signal. Bit[0] WDT Bit[1] GP21 Bit[2] GP22 Bit[3] DEVINT_EN (Enable bit for group SMI signal for PME) Bit[4] GP27 Bit[5] GP32 Bit[6] GP33 Bit[7] Reserved The PME Wake Enable register is not affected by Vcc POR, SOFT RESET or PCI RESET.

TABLE 24-3: DETAILED RUNTIME REGISTER DESCRIPTION (CONTINUED)

Name	REG Offset (HEX)	Description
PME_EN5 Default = 0x00 on VTR POR	0A (R/W)	PME Wake Enable Register 5 This register is used to enable individual PME wake sources onto the nIO_PME wake bus. When the PME Wake Enable register bit for a wake source is active (“1”), if the source asserts a wake event so that the associated status bit is “1” and the PME_EN bit is “1”, the source will assert the nIO_PME signal. When the PME Wake Enable register bit for a wake source is inactive (“0”), the PME Wake Status register will indicate the state of the wake source but will not assert the nIO_PME signal. Bit[0] GP50 Bit[1] GP51 Bit[2] GP52 Bit[3] GP53 Bit[4] GP54 Bit[5] GP55 Bit[6] GP56 Bit[7] GP57 The PME Wake Enable register is not affected by Vcc POR, SOFT RESET or PCI RESET.
PME_EN6 Default = 0x00 on VTR POR (SCH3227 or SCH3226, and STRAPOPT=0) NOTE: Bit 7 of this register needs to be VBAT powered	0B (R/W)	PME Enable Register 6 This register is used to enable individual PME sources onto the nIO_PME signal. When the PME Enable register bit for a PME source is active (“1”), if the source asserts a PME event and the PME_EN bit is “1”, the source will assert the nIO_PME signal. When the PME Enable register bit for a PME source is inactive (“0”), the PME Status register will indicate the state of the PME source but will not assert the nIO_PME signal. Bit[0] LOW_BAT Bit[1] Reserved Bit[2] GP60 Bit[3] GP61 Bit[4] SPEMSE_EN (Wake on specific mouse click) Bit[5] SPEKEY_EN (Wake on specific key) Bit[6] PB_EN Bit[7] PFR_STS Power Failure Recovery Enable The PME Enable register 6 is not affected by VCC POR, SOFT RESET or PCI RESET.
PME_EN6 Default = 0x00 on VTR POR (SCH3222, SCH3224, or SCH3227 / SCH3226 with STRAPOPT=1) NOTE: Bit 7 of this register needs to be VBAT powered	0B (R/W)	PME Enable Register 6 This register is used to enable individual PME sources onto the nIO_PME signal. When the PME Enable register bit for a PME source is active (“1”), if the source asserts a PME event and the PME_EN bit is “1”, the source will assert the nIO_PME signal. When the PME Enable register bit for a PME source is inactive (“0”), the PME Status register will indicate the state of the PME source but will not assert the nIO_PME signal. Bit[0] LOW_BAT Bit[1] Reserved Bit[2] GP60 Bit[3] GP61 Bit[4] SPEMSE_EN (Wake on specific mouse click) Bit[5] SPEKEY_EN (Wake on specific key) Bit[6] PB_EN Bit[7] Reserved The PME Enable register 6 is not affected by VCC POR, SOFT RESET or PCI RESET.

© 2016-2017 Microchip Technology Inc.

TABLE 24-3: DETAILED RUNTIME REGISTER DESCRIPTION (CONTINUED)

Name	REG Offset (HEX)	Description
PME_STS7 Default = 0x00 on VTR POR (SCH3227 or SCH3226, and STRAPOPT=0)	0C (R/WC)	PME Wake Status Register 7 This register indicates the state of the individual PME wake sources, independent of the individual source enables or the PME_EN bit. If the wake source has asserted a wake event, the associated PME Wake Status bit will be a “1”. If enabled, any set bit in this register asserts the nIO_PME pin. Bit[0] RI3 Bit[1] RI4 Bit[2] Reserved Bit[3] Reserved Bit[4] Reserved Bit[5] Reserved Bit[6] Reserved Bit[7] Reserved The PME Wake Status register is not affected by Vcc POR, SOFT RESET or PCI RESET. Writing a “1” to Bit[7:0] will clear it. Writing a “0” to any bit in PME Wake Status Register has no effect.
PME_STS7 Default = 0x00 on VTR POR (SCH3222, SCH3224, or SCH3227 / SCH3226 with STRAPOPT=1)	0C (R/WC)	PME Wake Status Register 7 This register indicates the state of the individual PME wake sources, independent of the individual source enables or the PME_EN bit. If the wake source has asserted a wake event, the associated PME Wake Status bit will be a “1”. If enabled, any set bit in this register asserts the nIO_PME pin. Bit[0] RI3 Bit[1] RI4 Bit[2] RI5 Bit[3] RI6 Bit[4] Reserved Bit[5] Reserved Bit[6] Reserved Bit[7] Reserved The PME Wake Status register is not affected by Vcc POR, SOFT RESET or PCI RESET. Writing a “1” to Bit[7:0] will clear it. Writing a “0” to any bit in PME Wake Status Register has no effect.
PME_EN7 Default = 0x00 on Vbat POR (SCH3227 or SCH3226, and STRAPOPT=0)	10 (R/W)	PME Wake Enable Register 1 This register is used to enable individual PME wake sources onto the nIO_PME wake bus. When the PME Wake Enable register bit for a wake source is active (“1”), if the source asserts a wake event so that the associated status bit is “1” and the PME_EN bit is “1”, the source will assert the nIO_PME signal. When the PME Wake Enable register bit for a wake source is inactive (“0”), the PME Wake Status register will indicate the state of the wake source but will not assert the nIO_PME signal. Bit[0] RI3 Bit[1] RI4 Bit[2] Reserved Bit[3] Reserved Bit[4] Reserved Bit[5] Reserved Bit[6] Reserved Bit[7] Reserved The PME Wake Enable register is not affected by Vcc POR, SOFT RESET or PCI RESET.

TABLE 24-3: DETAILED RUNTIME REGISTER DESCRIPTION (CONTINUED)

Name	REG Offset (HEX)	Description
PME_EN7 Default = 0x00 on Vbat POR (SCH3222, SCH3224, or SCH3227 / SCH3226 with STRAPOPT=1)	10 (R/W)	PME Wake Enable Register 1 This register is used to enable individual PME wake sources onto the nIO_PME wake bus. When the PME Wake Enable register bit for a wake source is active (“1”), if the source asserts a wake event so that the associated status bit is “1” and the PME_EN bit is “1”, the source will assert the nIO_PME signal. When the PME Wake Enable register bit for a wake source is inactive (“0”), the PME Wake Status register will indicate the state of the wake source but will not assert the nIO_PME signal. Bit[0] RI3 Bit[1] RI4 Bit[2] RI5 Bit[3] RI6 Bit[4] Reserved Bit[5] Reserved Bit[6] Reserved Bit[7] Reserved The PME Wake Enable register is not affected by Vcc POR, SOFT RESET or PCI RESET.
SP12 Option Default = 0x44 on VTR POR	0x12 (R/W)	SP Options for SP1 and SP2 Bit[0] Automatic Direction Control Select SP1 1=FC on 0=FC off Bits[1] Signal select SP1 1=nRTS control 0=nDTR control Bits[2] Polarity SP1 0= Drive low when enabled 1= Drive 1 when enabled Bits[3] RESERVED Bit[4] Automatic Direction Control Select SP2 1=FC on 0=FC off Bits[5] Signal select SP2 1=nRTS control 0=nDTR control Bits[6] Polarity SP2 0= Drive low when enabled 1= Drive 1 when enabled Bits[7] RESERVED
SP34 Option Default = 0x44 on VTR POR (SCH3224)	0x13 (R/W)	Bits[7:0] RESERVED

© 2016-2017 Microchip Technology Inc.

TABLE 24-3: DETAILED RUNTIME REGISTER DESCRIPTION (CONTINUED)

Name	REG Offset (HEX)	Description
SP34 Option Default = 0x44 on VTR POR (All except SCH3224)	0x13 (R/W)	Bit[0] Automatic Direction Control Select SP3 1=FC on 0=FC off Bits[1] Signal select SP3 1=nRTS control 0=nDTR control Bits[2] Polarity SP3 0= Drive low when enabled 1= Drive 1 when enabled Bits[3] RESERVED Bit[4] Automatic Direction Control Select SP4 1=FC on 0=FC off Bits[5] Signal select SP4 1=nRTS control 0=nDTR control Bits[6] Polarity SP4 0= Drive low when enabled 1= Drive 1 when enabled Bits[7] RESERVED
SMI_STS1 Default = 0x02, or 0x03 On VTR POR. The default will be 0x03 if there is a LOW_BAT event under VBAT power only, or 0x02 if this event does not occur. Bit 0 will be set to ‘1’ on a VCC POR if the battery voltage drops below 2.4V under VTR power (VCC=0) or under battery power only. Bit 1 is set to ‘1’ on VCC POR, VTR POR, PCI Reset and soft reset.	14 Bits[0] are R/WC. Bits[1:4,7] are RO.	SMI Status Register 1 This register is used to read the status of the SMI inputs. The following bits must be cleared at their source except as shown. Bit[0] LOW_BAT. Cleared by a write of ‘1’. When the battery is removed and replaced or if the battery voltage drops below 1.2V (nominal) under battery power only (VBAT POR), then the LOW_BAT SMI status bit is set on VTR POR. When the battery voltage drops below 2.4 volts (nominal) under VTR power (VCC=0) or under battery power only, the LOW_BAT SMI status bit is set on VCC POR. Bit[1] PINT. The parallel port interrupt defaults to ‘1’ when the parallel port activate bit is cleared. When the parallel port is activated, PINT follows the nACK input. Bit[2] U2INT Bit[3] U1INT Bit[4] FINT Bit[5] Reserved Bit[6] Reserved Bit[7] WDT
SMI_STS2 Default = 0x00 on VTR POR	15 (R/W) Bits[0,1] are RO Bits[2] is Read-Clear.	SMI Status Register 2 This register is used to read the status of the SMI inputs. Bit[0] MINT. Cleared at source. Bit[1] KINT. Cleared at source. Bit[2] IRINT. This bit is set by a transition on the IR pin (IRRX). Cleared by a read of this register. Bit[3] Reserved Bit[4] SPEMSE_STS (Wake on specific mouse click) - Cleared by writing a ‘1’ Bit[7:5] Reserved

TABLE 24-3: DETAILED RUNTIME REGISTER DESCRIPTION (CONTINUED)

Name	REG Offset (HEX)	Description
SMI_STS3 Default = 0x00 on VTR POR	16 (R/WC)	SMI Status Register 3 This register is used to read the status of the SMI inputs. The following bits are cleared on a write of ‘1’. Bit[0] Reserved Bit[1] GP21 Bit[2] GP22 Bit[3] GP54 Bit[4] GP55 Bit[5] GP56 Bit[6] GP57 Bit[7] GP60
SMI_STS4 Default = 0x00 on VTR POR (Note 24-22) (SCH3224)	17 (R/WC)	SMI Status Register 4 This register is used to read the status of the SMI inputs. The following bits are cleared on a write of ‘1’. Bit[0] RESERVED Bit[1] RESERVED Bit[2] GP32 Bit[3] GP33 Bit[4] U5INT Bit[5] GP42 Bit[6] U5INT Bit[7] GP61
SMI_STS4 Default = 0x00 on VTR POR (Note 24-22) (All except SCH3224)	17 (R/WC)	SMI Status Register 4 This register is used to read the status of the SMI inputs. The following bits are cleared on a write of ‘1’. Bit[0] U3INT Bit[1] U4INT Bit[2] GP32 Bit[3] GP33 Bit[4] U5INT (RESERVED if SCH3227/SCH3226 and STRAPOPT=0) Bit[5] GP42 Bit[6] U6INT (RESERVED if SCH3227/SCH3226 and STRAPOPT=0) Bit[7] GP61
SMI_EN1 Default = 0x00 On VTR POR	18 (R/W)	SMI Enable Register 1 This register is used to enable the different interrupt sources onto the group nIO_SMI output. 1=Enable 0=Disable Bit[0] EN_LOW_BAT Bit[1] EN_PINT Bit[2] EN_U2INT Bit[3] EN_U1INT Bit[4] EN_FINT Bit[5] Reserved Bit[6] Reserved Bit[7] EN_WDT
SMI_EN2 Default = 0x00 on VTR POR	19 (R/W)	SMI Enable Register 2 This register is used to enable the different interrupt sources onto the group nSMI output, and the group nSMI output onto the nIO_SMI GPI/O pin, the serial IRQ stream or into the PME Logic. Unless otherwise noted, 1=Enable 0=Disable Bit[0] EN_MINT Bit[1] EN_KINT Bit[2] EN_IRINT Bit[3] Reserved Bit[4] EN_SPESME Bit[5] EN_SMI_PME (Enable group SMI into PME logic) Bit[6] EN_SMI_S (Enable group SMI onto serial IRQ) Bit[7] EN_SMI (Enable group SMI onto nIO_SMI pin)

© 2016-2017 Microchip Technology Inc.

TABLE 24-3: DETAILED RUNTIME REGISTER DESCRIPTION (CONTINUED)

Name	REG Offset (HEX)	Description
SMI_EN3 Default = 0x00 on VTR POR	1A (R/W)	SMI Enable Register 3 This register is used to enable the different interrupt sources onto the group nSMI output. 1=Enable 0=Disable Bit[0] Reserved Bit[1] GP21 Bit[2] GP22 Bit[3] GP54 Bit[4] GP55 Bit[5] GP56 Bit[6] GP57 Bit[7] GP60
SMI_EN4 Default = 0x00 on VTR POR (SCH3224)	1B (R/W)	SMI Enable Register 4 This register is used to enable the different interrupt sources onto the group nSMI output. 1=Enable 0=Disable Bit[0] RESERVED Bit[1] RESERVED Bit[2] GP32 Bit[3] GP33 Bit[4] U5INT Bit[5] GP42 Bit[6] U5INT Bit[7] GP61
SMI_EN4 Default = 0x00 on VTR POR (All except SCH3224)	1B (R/W)	SMI Enable Register 4 This register is used to enable the different interrupt sources onto the group nSMI output. 1=Enable 0=Disable Bit[0] U3INT Bit[1] U4INT Bit[2] GP32 Bit[3] GP33 Bit[4] U5INT (RESERVED if SCH3227/SCH3226 and STRAPOPT=0) Bit[5] GP42 Bit[6] U6INT (RESERVED if SCH3227/SCH3226 and STRAPOPT=0) Bit[7] GP61
MSC_STS Default = 0x00 on VTR POR	1C (R/W)	Miscellaneous Status Register Bits[5:0] can be cleared by writing a 1 to their position (writing a 0 has no effect). Bit[0] Either Edge Triggered Interrupt Input 0 Status. This bit is set when an edge occurs on the GP21 pin. Bit[1] Either Edge Triggered Interrupt Input 1 Status. This bit is set when an edge occurs on the GP22 pin. Bit[2] Reserved Bit[3] Reserved Bit[4] Either Edge Triggered Interrupt Input 4 Status. This bit is set when an edge occurs on the GP60 pin. Bit[5] Either Edge Triggered Interrupt Input 5 Status. This bit is set when an edge occurs on the GP61 pin. Bit[7:6] Reserved. This bit always returns zero.
RESGEN VTR POR default = 00h	1Dh (R/W)	Reset Generator Bit[0] WDT2_EN: Enable Watchdog timer Generation / Select 0= WDT Enabled - Source for PWRGD_OUT (Default) 1= WDT Disabled - Not source for PWRGD_OUT Bit[1] ThermTrip Source Select 0 = Thermtrip not source for PWRGD_OUT ((Default) 1 = Thermtrip source for PWRGD_OUT Bit[2] WDT2_CTL: WDT input bit Bit[7:3] Reserved

TABLE 24-3: DETAILED RUNTIME REGISTER DESCRIPTION (CONTINUED)

Name	REG Offset (HEX)	Description
Reserved Default = 0x03 on VCC POR, PCI Reset and VTR POR	1E (R/W)	Bit[7:0] Reserved, do not change.
Reserved	1F (R)	Bit[7:0] Reserved, contents undefined.
UART1 FIFO Control Shadow	20 (R)	UART FIFO Control Shadow 1 Bit[0] FIFO Enable Bit[1] RCVR FIFO Reset Bit[2] XMIT FIFO Reset Bit[3] DMA Mode Select Bit[5:4] Reserved Bit[6] RCVR Trigger (LSB) Bit[7] RCVR Trigger (MSB)
UART2 FIFO Control Shadow	21 (R)	UART FIFO Control Shadow 2 Bit[0] FIFO Enable Bit[1] RCVR FIFO Reset Bit[2] XMIT FIFO Reset Bit[3] DMA Mode Select Bit[5:4] Reserved Bit[6] RCVR Trigger (LSB) Bit[7] RCVR Trigger (MSB)
UART3 FIFO Control Shadow (SCH3224)	22 (R)	Bits[7:0] RESERVED
UART3 FIFO Control Shadow (All except SCH3224)	22 (R)	UART FIFO Control Shadow 3 Bit[0] FIFO Enable Bit[1] RCVR FIFO Reset Bit[2] XMIT FIFO Reset Bit[3] DMA Mode Select Bit[5:4] Reserved Bit[6] RCVR Trigger (LSB) Bit[7] RCVR Trigger (MSB)
GP10 Default = 0x01 on VTR POR (SCH3224)	23 (R/W)	General Purpose I/O bit 1.0 Bit[0] In/Out : =1 Input, =0 Output Bit[1] Polarity : =1 Invert, =0 No Invert Bits[6:2] Reserved Bit[7] Output Type Select 1=Open Drain 0=Push Pull
GP10 Default = 0x01 on VTR POR (All except SCH3224)	23 (R/W)	General Purpose I/O bit 1.0 Bit[0] In/Out : =1 Input, =0 Output Bit[1] Polarity : =1 Invert, =0 No Invert Bit[2] Alternate Function Select 1= RXD3 0=GP10 Bits[6:3] Reserved Bit[7] Output Type Select 1=Open Drain 0=Push Pull
GP11 Default = 0x01 on VTR POR (SCH3224)	24 (R/W)	General Purpose I/O bit 1.1 Bit[0] In/Out : =1 Input, =0 Output Bit[1] Polarity : =1 Invert, =0 No Invert Bits[6:2] Reserved Bit[7] Output Type Select 1=Open Drain 0=Push Pull

© 2016-2017 Microchip Technology Inc.

TABLE 24-3: DETAILED RUNTIME REGISTER DESCRIPTION (CONTINUED)

Name	REG Offset (HEX)	Description
GP11 Default = 0x01 on VTR POR (All except SCH3224)	24 (R/W)	General Purpose I/O bit 1.1 Bit[0] In/Out : =1 Input, =0 Output Bit[1] Polarity : =1 Invert, =0 No Invert Bit[2] Alternate Function Select 1=TXD3 0=GP11 Bits[6:3] Reserved Bit[7] Output Type Select 1=Open Drain 0=Push Pull
GP12 Default = 0x01 on VTR POR (SCH3224)	25 (R/W)	General Purpose I/O bit 1.2 Bit[0] In/Out : =1 Input, =0 Output Bit[1] Polarity : =1 Invert, =0 No Invert Bits[6:2] Reserved Bit[7] Output Type Select 1=Open Drain 0=Push Pull
GP12 Default = 0x01 on VTR POR (All except SCH3224)	25 (R/W)	General Purpose I/O bit 1.2 Bit[0] In/Out : =1 Input, =0 Output Bit[1] Polarity : =1 Invert, =0 No Invert Bit[2] Alternate Function Select 1= nDCD3 0=GP12 Bits[6:3] Reserved Bit[7] Output Type Select 1=Open Drain 0=Push Pull
GP13 Default = 0x01 on VTR POR (SCH3224)	26 (R/W)	General Purpose I/O bit 1.3 Bit[0] In/Out : =1 Input, =0 Output Bit[1] Polarity : =1 Invert, =0 No Invert Bits[6:2] Reserved Bit[7] Output Type Select 1=Open Drain 0=Push Pull
GP13 Default = 0x01 on VTR POR (All except SCH3224)	26 (R/W)	General Purpose I/O bit 1.3 Bit[0] In/Out : =1 Input, =0 Output Bit[1] Polarity : =1 Invert, =0 No Invert Bit[2] Alternate Function Select 1= nRI3 0=GP13 Bits[6:3] Reserved Bit[7] Output Type Select 1=Open Drain 0=Push Pull
GP14 Default = 0x01 on VTR POR (SCH3224)	27 (R/W)	General Purpose I/O bit 1.1 Bit[0] In/Out : =1 Input, =0 Output Bit[1] Polarity : =1 Invert, =0 No Invert Bits[6:2] Reserved Bit[7] Output Type Select 1=Open Drain 0=Push Pull
GP14 Default = 0x01 on VTR POR (All except SCH3224)	27 (R/W)	General Purpose I/O bit 1.1 Bit[0] In/Out : =1 Input, =0 Output Bit[1] Polarity : =1 Invert, =0 No Invert Bit[2] Alternate Function Select 1= nDSR3 0=GP14 Bits[6:3] Reserved Bit[7] Output Type Select 1=Open Drain 0=Push Pull

TABLE 24-3: DETAILED RUNTIME REGISTER DESCRIPTION (CONTINUED)

Name	REG Offset (HEX)	Description
UART4 FIFO Control Shadow (SCH3224)	28 (R)	Bits[7:0] RESERVED
UART4 FIFO Control Shadow (All except SCH3224)	28 (R)	UART FIFO Control Shadow 4 Bit[0] FIFO Enable Bit[1] RCVR FIFO Reset Bit[2] XMIT FIFO Reset Bit[3] DMA Mode Select Bit[5:4] Reserved Bit[6] RCVR Trigger (LSB) Bit[7] RCVR Trigger (MSB)
GP15 Default = 0x01 on VTR POR (SCH3224)	29 (R/W)	General Purpose I/O bit 1.1 Bit[0] In/Out : =1 Input, =0 Output Bit[1] Polarity : =1 Invert, =0 No Invert Bits[6:2] Reserved Bit[7] Output Type Select 1=Open Drain 0=Push Pull
GP15 Default = 0x01 on VTR POR (All except SCH3224)	29 (R/W)	General Purpose I/O bit 1.1 Bit[0] In/Out : =1 Input, =0 Output Bit[1] Polarity : =1 Invert, =0 No Invert Bit[2] Alternate Function Select 1= nDTR3 0=GP15 Bits[6:3] Reserved Bit[7] Output Type Select 1=Open Drain 0=Push Pull
GP16 Default = 0x01 on VTR POR (SCH3224)	2A (R/W)	General Purpose I/O bit 1.1 Bit[0] In/Out : =1 Input, =0 Output Bit[1] Polarity : =1 Invert, =0 No Invert Bits[6:2] Reserved Bit[7] Output Type Select 1=Open Drain 0=Push Pull
GP16 Default = 0x01 on VTR POR (All except SCH3224)	2A (R/W)	General Purpose I/O bit 1.1 Bit[0] In/Out : =1 Input, =0 Output Bit[1] Polarity : =1 Invert, =0 No Invert Bit[2] Alternate Function Select 1= nCTS3 0=GP16 Bits[6:3] Reserved Bit[7] Output Type Select 1=Open Drain 0=Push Pull
GP17 Default = 0x01 on VTR POR (SCH3224)	2B (R/W)	General Purpose I/O bit 1.1 Bit[0] In/Out : =1 Input, =0 Output Bit[1] Polarity : =1 Invert, =0 No Invert Bits[6:2] Reserved Bit[7] Output Type Select 1=Open Drain 0=Push Pull
GP17 Default = 0x01 on VTR POR (All except SCH3224)	2B (R/W)	General Purpose I/O bit 1.1 Bit[0] In/Out : =1 Input, =0 Output Bit[1] Polarity : =1 Invert, =0 No Invert Bit[2] Alternate Function Select 1= nRTS3 0=GP17 Bits[6:4] Reserved Bit[7] Output Type Select 1=Open Drain 0=Push Pull

© 2016-2017 Microchip Technology Inc.

TABLE 24-3: DETAILED RUNTIME REGISTER DESCRIPTION (CONTINUED)

Name	REG Offset (HEX)	Description
GP21 Default =0x8C on VTR POR	2C (R/W)	General Purpose I/O bit 2.1 Bit[0] In/Out : =1 Input, =0 Output Bit[1] Polarity : =1 Invert, =0 No Invert Bit[3:2] Alternate Function Select 11= KDAT (Default) 10=Either Edge Triggered Interrupt Input 0 (Note 24-20) 01=Reserved 00=Basic GPIO function Bits[6:4] Reserved Bit[7] Output Type Select 1=Open Drain 0=Push Pull (Default) **APPLICATION NOTE:** When Bits[3:2] are programmed to ‘11’ to select the KDAT function, bit[0] should always be programmed to ‘0’. The KDAT function will not operate properly when bit[0] is set.
GP22 Default =0x8C on VTR POR	2D (R/W)	General Purpose I/O bit 2.2 Bit[0] In/Out : =1 Input, =0 Output Bit[1] Polarity : =1 Invert, =0 No Invert Bit[3:2] Alternate Function Select 11= KCLK (Default) 10=Either Edge Triggered Interrupt Input 1 (Note 24-20) 01= Reserved 00=Basic GPIO function Bits[6:4] Reserved Bit[7] Output Type Select 1=Open Drain (Default) 0=Push Pull **APPLICATION NOTE:** When Bits[3:2] are programmed to ‘11’ to select the KCLK function, bit[0] should always be programmed to ‘0’. The KCLK function will not operate properly when bit[0] is set.
UART5 FIFO Control Shadow (SCH3227 or SCH3226, and STRAPOPT=0)	2E (R)	Bits[7:0] RESERVED
UART5 FIFO Control Shadow (SCH3222, SCH3224, or SCH3227 / SCH3226 with STRAPOPT=1)	2E (R)	UART FIFO Control Shadow 5 Bit[0] FIFO Enable Bit[1] RCVR FIFO Reset Bit[2] XMIT FIFO Reset Bit[3] DMA Mode Select Bit[5:4] Reserved Bit[6] RCVR Trigger (LSB) Bit[7] RCVR Trigger (MSB)
UART6 FIFO Control Shadow (SCH3227 or SCH3226, and STRAPOPT=0)	2F (R)	Bits[7:0] RESERVED
UART6 FIFO Control Shadow (SCH3222, SCH3224, or SCH3227 / SCH3226 with STRAPOPT=1)	2F (R)	Bit[0] FIFO Enable Bit[1] RCVR FIFO Reset Bit[2] XMIT FIFO Reset Bit[3] DMA Mode Select Bit[5:4] Reserved Bit[6] RCVR Trigger (LSB) Bit[7] RCVR Trigger (MSB)

TABLE 24-3: DETAILED RUNTIME REGISTER DESCRIPTION (CONTINUED)

Name	REG Offset (HEX)	Description
SP5 Option Default = 0x04 on VTR POR (SCH3227 or SCH3226, and STRAPOPT=0)	30 (R/W)	Bits[7:0] RESERVED
SP5 Option Default = 0x04 on VTR POR (SCH3222, SCH3224, or SCH3227 / SCH3226 with STRAPOPT=1)	30 (R/W)	Bit[0] nSCOUT5 Select: 1= nRTS5 0= nDTR5 Bit[2:1] nSCIN Select: 11= nDCD5 10= nRI5 01= nCTS5 00= nDSR5 Bit[3] Automatic Direction Control Select 1=FC on 0=FC off Bits[4] Signal select 1=nRTS control 0=nDTR control Bits[5] Polarity 0= Drive low when enabled 1= Drive 1 when enabled Bit[7:6] Reserved
SP6 Option Default = 0x04 on VTR POR (SCH3227 or SCH3226, and STRAPOPT=0)	31 (R/W)	Bits[7:0] RESERVED
SP6 Option Default = 0x04 on VTR POR (SCH3222, SCH3224, or SCH3227 / SCH3226 with STRAPOPT=1)	31 (R/W)	Bit[0] nSCOUT6 Select: 1= nRTS6 0= nDTR6 Bit[2:1] nSCIN Select: 11= nDCD6 10= nRI6 01= nCTS6 00= nDSR6 Bit[3] Automatic Direction Control Select 1=FC on 0=FC off Bits[4] Signal select 1=nRTS control 0=nDTR control Bits[5] Polarity 0= Drive low when enabled 1= Drive 1 when enabled Bit[7:6] Reserved
GP27 Default = 0x01 on VTR POR	32 (R/W)	General Purpose I/O bit 2.7 Bit[0] In/Out : =1 Input, =0 Output Bit[1] Polarity : =1 Invert, =0 No Invert Bit[3:2] Alternate Function Select 11=Reserved 10=8042 P17 function (Note 24-19) 01=nIO_SMI (Note 24-21) 00=GPIO Bits[6:4] Reserved Bit[7] Output Type Select 1=Open Drain 0=Push Pull

© 2016-2017 Microchip Technology Inc.

TABLE 24-3: DETAILED RUNTIME REGISTER DESCRIPTION (CONTINUED)

Name	REG Offset (HEX)	Description
GP30 Default = 0x05 on VTR POR	33 (R/W)	General Purpose I/O bit 3.2 Bit[0] In/Out : =1 Input, =0 Output Bit[1] Polarity : =1 Invert, =0 No Invert Bit[2] Alternate Function Select 1=nFPRST (Default) 0=GPIO Bits[6:3] Reserved Bit[7] Output Type Select 1=Open Drain (Default) 0=Push Pull
GP31 Default = 0x01 on VTR POR (SCH3224)	34 (R/W)	General Purpose I/O bit 1.1 Bit[0] In/Out : =1 Input, =0 Output Bit[1] Polarity : =1 Invert, =0 No Invert Bits[6:2] Reserved Bit[7] Output Type Select read only returns 1= Open Drain **Note:** The pin can only be an Open Drain output.
GP31 Default = 0x01 on VTR POR (All except SCH3224)	34 (R/W)	General Purpose I/O bit 1.1 Bit[0] In/Out : =1 Input, =0 Output Bit[1] Polarity : =1 Invert, =0 No Invert Bit[2] Alternate Function Select 1= nRI4 0=GP31 Bits[6:3] Reserved Bit[7] Output Type Select read only returns 1= Open Drain **Note:** The pin can only be an Open Drain output.
GP32 Default = 0x84 on VTR POR	35 (R/W)	General Purpose I/O bit 3.2 Bit[0] In/Out : =1 Input, =0 Output Bit[1] Polarity : =1 Invert, =0 No Invert Bit[2] Alternate Function Select 1=MDAT (Default) 0=GPIO Bits[6:3] Reserved Bit[7] Output Type Select 1=Open Drain (Default) 0=Push Pull **APPLICATION NOTE:** When Bit[2] are programmed to ‘1’ to select the MDAT function, bit[0] should always be programmed to ‘0’. The MDAT function will not operate properly when bit[0] is set.
GP33 Default = 0x84 on VTR POR	36 (R/W)	General Purpose I/O bit 3.3 Bit[0] In/Out : =1 Input, =0 Output Bit[1] Polarity : =1 Invert, =0 No Invert Bit[2] Alternate Function Select 1=MCLK (Default) 0=GPIO Bits[6:3] Reserved Bit[7] Output Type Select 1=Open Drain (Default) 0=Push Pull **APPLICATION NOTE:** When Bit[2] are programmed to ‘1’ to select the MCLK function, bit[0] should always be programmed to ‘0’. The MCLK function will not operate properly when bit[0] is set.
GP34 Default = 0x01 on VTR POR (SCH3224)	37 (R/W)	General Purpose I/O bit 1.1 Bit[0] In/Out : =1 Input, =0 Output Bit[1] Polarity : =1 Invert, =0 No Invert Bits[6:2] Reserved Bit[7] Output Type Select read only returns 1= Open Drain **Note:** The pin can only be an Open Drain output.

TABLE 24-3: DETAILED RUNTIME REGISTER DESCRIPTION (CONTINUED)

Name	REG Offset (HEX)	Description
GP34 Default = 0x01 on VTR POR (All except SCH3224)	37 (R/W)	General Purpose I/O bit 1.1 Bit[0] In/Out : =1 Input, =0 Output Bit[1] Polarity : =1 Invert, =0 No Invert Bit[2] Alternate Function Select 1= nDTR4 0=GP34 Bits[6:3] Reserved Bit[7] Output Type Select read only returns 1= Open Drain **Note:** The pin can only be an Open Drain output.
GP36 Default = 0x01 on VTR POR	39 (R/W)	General Purpose I/O bit 3.6 Bit[0] In/Out : =1 Input, =0 Output Bit[1] Polarity : =1 Invert, =0 No Invert Bit[2] Alternate Function Select 1= nKBDRST 0=Basic GPIO function Bits[6:3] Reserved Bit[7] Output Type Select 1=Open Drain 0=Push Pull
GP37 Default = 0x01 on VTR POR	3A (R/W)	General Purpose I/O bit 3.7 Bit[0] In/Out : =1 Input, =0 Output Bit[1] Polarity : =1 Invert, =0 No Invert Bit[2] Alternate Function Select 1=A20M 0=Basic GPIO function Bits[6:3] Reserved Bit[7] Output Type Select 1=Open Drain 0=Push Pull
GP40 Default =0x01 on VTR POR	3B (R/W)	General Purpose I/O bit 4.0 Bit[0] In/Out : =1 Input, =0 Output Bit[1] Polarity : =1 Invert, =0 No Invert Bit[2] Alternate Function Select 1= Reserved 0= Basic GPIO function Bits[6:3] Reserved Bit[7] Output Type Select 1=Open Drain 0=Push Pull
CLOCK Output Control Register VTR POR = 0x00	3C (R/W)	Bit[0] Enable 1= Output Enabled 0= Disable Clock output Bit[3:1] Frequency Select 000= 0.25 Hz 001= 0.50 Hz 010= 1.00 Hz 011= 2.00 Hz 100= 4.00 Hz 101= 8.00 Hz 110= 16 hz 111 = reserved Bit[7:4] Reserved

© 2016-2017 Microchip Technology Inc.

TABLE 24-3: DETAILED RUNTIME REGISTER DESCRIPTION (CONTINUED)

Name	REG Offset (HEX)	Description
GP42 Default =0x01 on VTR POR	3D (R/W)	General Purpose I/O bit 4.2 Bit[0] In/Out : =1 Input, =0 Output Bit[1] Polarity : =1 Invert, =0 No Invert Bit[2] Alternate Function Select 1=nIO_PME **Note:** Configuring this pin function as output with non-inverted polarity will give an active low output signal. The output type can be either open drain or push-pull. 0=Basic GPIO function Bits[6:3] Reserved Bit[7] Output Type Select 1=Open Drain 0=Push Pull
GP50 Default = 0x01 on VTR POR	3F (R/W)	General Purpose I/O bit 5.0 Bit[0] In/Out : =1 Input, =0 Output Bit[1] Polarity : =1 Invert, =0 No Invert Bit[2] Alternate Function Select 1=nRI2 (Note 24-18) 0=GPIO Bits[6:3] Reserved Bit[7] Output Type Select 1=Open Drain 0=Push Pull
GP51 Default = 0x01 on VTR POR	40 (R/W)	General Purpose I/O bit 5.1 Bit[0] In/Out : =1 Input, =0 Output Bit[1] Polarity : =1 Invert, =0 No Invert Bit[2] Alternate Function Select 1=nDCD2 0=GPIO Bits[6:3] Reserved Bit[7] Output Type Select 1=Open Drain 0=Push Pull
GP52 Default = 0x01 on VTR POR	41 (R/W)	General Purpose I/O bit 5.2 Bit[0] In/Out : =1 Input, =0 Output Bit[1] Polarity : =1 Invert, =0 No Invert Bit[2] Alternate Function Select 1=RXD2 0=GPIO Bits[6:3] Reserved Bit[7] Output Type Select 1=Open Drain 0=Push Pull
GP53 Default = 0x01 on VTR POR	42 (R/W)	General Purpose I/O bit 5.3 Bit[0] In/Out : =1 Input, =0 Output Bit[1] Polarity : =1 Invert, =0 No Invert Bit[2] Alternate Function Select 1=TXD2 0=GPIO Bits[6:3] Reserved Bit[7] Output Type Select 1=Open Drain 0=Push Pull

© 2016-2017 Microchip Technology Inc.

TABLE 24-3: DETAILED RUNTIME REGISTER DESCRIPTION (CONTINUED)

Name	REG Offset (HEX)	Description
GP54 Default = 0x01 on VTR POR	43 (R/W)	General Purpose I/O bit 5.4 Bit[0] In/Out : =1 Input, =0 Output Bit[1] Polarity : =1 Invert, =0 No Invert Bit[2] Alternate Function Select 1=nDSR2 0=GPIO Bit[3] RESERVED Bits[6:4] Reserved Bit[7] Output Type Select 1=Open Drain 0=Push Pull
GP55 Default = 0x01 on VTR POR	44 (R/W)	General Purpose I/O bit 5.5 Bit[0] In/Out : =1 Input, =0 Output Bit[1] Polarity : =1 Invert, =0 No Invert Bit[2] Alternate Function Select 1=nRTS2 0=GPIO Bit[3] RESERVED Bits[6:4] Reserved Bit[7] Output Type Select 1=Open Drain 0=Push Pull
GP56 Default = 0x01 on VTR POR	45 (R/W)	General Purpose I/O bit 5.6 Bit[0] In/Out : =1 Input, =0 Output Bit[1] Polarity : =1 Invert, =0 No Invert Bit[2] Alternate Function Select 1=nCTS2 0=GPIO Bit[3] RESERVED Bits[6:4] Reserved Bit[7] Output Type Select 1=Open Drain 0=Push Pull
GP57 Default = 0x01 on VTR POR	46 (R/W)	General Purpose I/O bit 5.7 Bit[0] In/Out : =1 Input, =0 Output Bit[1] Polarity : =1 Invert, =0 No Invert Bit[2] Alternate Function Select 1=nDTR2 0=GPIO Bit[3] RESERVED Bits[6:4] Reserved Bit[7] Output Type Select 1=Open Drain 0=Push Pull
GP60 Default = 0x01 on VTR POR	47 (R/W)	General Purpose I/O bit 6.0 Bit[0] In/Out : =1 Input, =0 Output Bit[1] Polarity : =1 Invert, =0 No Invert Bit[3:2] Alternate Function Select 11=WDT 10=Either Edge Triggered Interrupt Input 4 (Note 24-20) 01=LED1 00=GPIO Bits[6:4] Reserved Bit[7] Output Type Select 1=Open Drain 0=Push Pull

© 2016-2017 Microchip Technology Inc.

TABLE 24-3: DETAILED RUNTIME REGISTER DESCRIPTION (CONTINUED)

Name	REG Offset (HEX)	Description
GP61 Default = 0x01 on VTR POR	48 (R/W)	General Purpose I/O bit 6.1 Bit[0] In/Out : =1 Input, =0 Output Bit[1] Polarity : =1 Invert, =0 No Invert Bit[3:2] Alternate Function Select 11=CLKO - Programmable clock output as described in 10=Either Edge Triggered Interrupt Input 5 (Note 24-20) 01=LED2 00=GPIO Bits[6:4] Reserved Bit[7] Output Type Select 1=Open Drain 0=Push Pull
PWR_REC Power Recovery Register Default = 0xxxxx11b on VTR POR Default =x00000xxb on a Vbat POR Default = 0xxxxxxxb on a VCC POR and PCI Reset Note: x indicates that the bit is not affected by this reset condition. (SCH3227 or SCH3226, and STRAPOPT=0)	49 R/W when bit[7] =0 (default), except for bit[4] Bit[4] is a Read-Only bit. Read-Only when bit[7]=1	A/C Power Control/Recovery Register Bit[0] Power Button Enable 0=disabled 1=enabled (default) Bit[1] Keyboard Power Button Enable 0=disabled 1=enabled (default) Bit[2] Power Failure Recovery Enable 0=disabled (default) 1=enabled Bit[3] PS_ON# sampling enable 0=Sampling is disabled (Mode 1) 1=Sampling is enabled (Mode 2) When sampling is enabled the PS_ON# pin is sampled every 0.5 seconds and stored in an 8-bit shift register for up to a maximum of 4 seconds. Bit[4] Previous State Bit (This read-only bit is powered by Vbat) (NOTE: THIS BIT IS NOT RESET ON A VTR POR) This bit contains the state of the PS_ON# pin when VTR power is removed from the device. 0=off (PS_ON# signal was high) 1=on (PS_ON# signal was low) Bit[6:5] APF (After Power Failure) (These bits are powered by Vbat) (NOTE: THIS BIT IS NOT RESET ON A VTR POR) When VTR transitions from the OFF state to the ON state, the power recovery logic will look at the APF bits to determine if the power supply should be off or on. If the logic determines that the Power Supply should be place in the ON state it will generate a pulse on the PB_OUT# pin. The auto recovery logic does not directly control the PS_ON# pin. The PS_ON# pin is controlled by the SLP_Sx# pin. 00=Power Supply Off 01=Power Supply On 10=Power Supply set to Previous State 11=Power Supply Off Bit[7] Register Recovery R/W Control This bit is used to control write access to the Power Recovery Register at offset 49h. 0=Read/Write 1=Read-OnlyA/C Power Control/Recovery Register

TABLE 24-3: DETAILED RUNTIME REGISTER DESCRIPTION (CONTINUED)

Name	REG Offset (HEX)	Description
PWR_REC Power Recovery Register Default = 0xxxxx11b on VTR POR Default =x00000xxb on a Vbat POR Default = 0xxxxxxxb on a VCC POR and PCI Reset Note: x indicates that the bit is not affected by this reset condition. (SCH3222, SCH3224, or SCH3227 / SCH3226 with STRAPOPT=1)	49	Bits[7:0] RESERVED Do not write to this register.
PS_ON Register default = 0x00 on a Vbat POR default = value latched on Power Failure on a VTR POR (SCH3227 or SCH3226, and STRAPOPT=0)	4A (R)	PS_ON Shift Register This 8-bit register is used to read the PS_ON sample values loaded in the shift register in A/C Power Recovery Control - Mode 2. Bit[0] = PS_ON# sampled 0 - 0.5sec before power failure Bit[1] = PS_ON# sampled 0.5 - 1.0sec before power failure Bit[2] = PS_ON# sampled 1.0 - 1.5sec before power failure Bit[3] = PS_ON# sampled 1.5 - 2.0sec before power failure Bit[4] = PS_ON# sampled 2.0 - 2.5sec before power failure Bit[5] = PS_ON# sampled 2.5 - 3.0sec before power failure Bit[6] = PS_ON# sampled 3.0 - 3.5sec before power failure Bit[7] = PS_ON# sampled 3.5 - 4.0sec before power failure Bit definition 0=off (PS_ON# signal was high) 1=on (PS_ON# signal was low) **Note:** This register is powered by Vbat
PS_ON Register default = 0x00 on a Vbat POR default = value latched on Power Failure on a VTR POR (SCH3222, SCH3224, or SCH3227 / SCH3226 with STRAPOPT=1)	4A (R)	Bits[7:0] RESERVED **Note:** This register is powered by Vbat
GP1 Default = 0x00 on VTR POR	4B (R/W)	General Purpose I/O Data Register 1 Bit[0] GP10 Bit[1] GP11 Bit[2] GP12 Bit[3] GP13 Bit[4] GP14 Bit[5] GP15 Bit[6] GP16 Bit[7] GP17

© 2016-2017 Microchip Technology Inc.

TABLE 24-3: DETAILED RUNTIME REGISTER DESCRIPTION (CONTINUED)

Name	REG Offset (HEX)	Description
GP2 Default = 0x00 on VTR POR	4C (R/W)	General Purpose I/O Data Register 2 Bit[0] Reserved Bit[1] GP21 Bit[2] GP22 Bit[3] Reserved Bit[4] Reserved Bit[5] Reserved Bit[6] Reserved Bit[7] GP27
GP3 Default = 0x00 on VTR POR	4D (R/W)	General Purpose I\O Data Register 3 Bit[0] GP30 Bit[1] GP31 Bit[2] GP32 Bit[3] GP33 Bit[4] GP34 Bit[5] Reserved Bit[6] GP36 Bit[7] GP37
GP4 Default = 0xF0 on VTR POR	4E (R/W)	General Purpose I/O Data Register 4 Bit[0] GP40 Bit[1] Reserved Bit[2] GP42 Bit[3] Reserved Bit[4] GP44 Bit[5] GP45 Bit[6] GP46 Bit[7] GP47
GP5 Default = 0x00 on VTR POR	4F (R/W)	General Purpose I/O Data Register 5 Bit[0] GP50 Bit[1] GP51 Bit[2] GP52 Bit[3] GP53 Bit[4] GP54 Bit[5] GP55 Bit[6] GP56 Bit[7] GP57
GP6 Default = 0x00 on VTR POR	50 (R/W)	General Purpose I/O Data Register 6 Bit[0] GP60 Bit[1] GP61 Bit[2] GP62 Bit[3] GP63 Bit[4] GP64 Bit[5] GP65 Bit[6] GP66 Bit[7] GP67
N/A	51 (R)	Bits[7:0] Reserved – reads return 0

TABLE 24-3: DETAILED RUNTIME REGISTER DESCRIPTION (CONTINUED)

Name	REG Offset (HEX)	Description
PS_ON# Previous State Select Default = 0x00 on Vbat POR (SCH3227 or SCH3226, and STRAPOPT=0)	53 (R/W)	Bits[7:4] Reserved – reads return 0 Bit[3] MCHP Reserved, should be programmed to 0 for proper operation Bits[2:0] PS_ON# Previous State Select The TTL level of the PS_ON# pin is sampled every 0.5 seconds and placed into an 8-bit shift register while VTR and VCC are on. The PS_ON# Previous State Select bits determine which bit is used as the previous state bit following a power failure (VTR ≤ ~2.2V). 000 = PS_ON# sampled 0 - 0.5sec before power failure 001 = PS_ON# sampled 0.5 - 1.0sec before power failure 010 = PS_ON# sampled 1.0 - 1.5sec before power failure 011 = PS_ON# sampled 1.5 - 2.0sec before power failure 100 = PS_ON# sampled 2.0 - 2.5sec before power failure 101 = PS_ON# sampled 2.5 - 3.0sec before power failure 110 = PS_ON# sampled 3.0 - 3.5sec before power failure 111 = PS_ON# sampled 3.5 - 4.0sec before power failure
PS_ON# Previous State Select Default = 0x00 on Vbat POR (SCH3222, SCH3224, or SCH3227 / SCH3226 with STRAPOPT=1)	53 (R/W)	Bits[7:0] RESERVED
GP62 Default = 0x01 on VTR POR (SCH3224)	54 (R/W)	General Purpose I/O bit 5.7 Bit[0] In/Out : =1 Input, =0 Output Bit[1] Polarity : =1 Invert, =0 No Invert Bits[6:2] Reserved Bit[7] Output Type Select 1=Open Drain 0=Push Pull
GP62 Default = 0x01 on VTR POR (All except SCH3224)	54 (R/W)	General Purpose I/O bit 5.7 Bit[0] In/Out : =1 Input, =0 Output Bit[1] Polarity : =1 Invert, =0 No Invert Bit[2] Alternate Function Select 1=nCTS4 0=GPIO Bits[6:3] Reserved Bit[7] Output Type Select 1=Open Drain 0=Push Pull
GP63 Default = 0x01 on VTR POR (SCH3224)	55 (R/W)	General Purpose I/O bit 5.7 Bit[0] In/Out : =1 Input, =0 Output Bit[1] Polarity : =1 Invert, =0 No Invert Bits[6:2] Reserved Bit[7] Output Type Select 1=Open Drain 0=Push Pull
GP63 Default = 0x01 on VTR POR (All except SCH3224)	55 (R/W)	General Purpose I/O bit 5.7 Bit[0] In/Out : =1 Input, =0 Output Bit[1] Polarity : =1 Invert, =0 No Invert Bit[2] Alternate Function Select 1=nDCD4 0=GPIO Bits[6:3] Reserved Bit[7] Output Type Select 1=Open Drain 0=Push Pull

© 2016-2017 Microchip Technology Inc.

TABLE 24-3: DETAILED RUNTIME REGISTER DESCRIPTION (CONTINUED)

Name	REG Offset (HEX)	Description
GP64 Default = 0x01 on VTR POR (SCH3224)	56 (R/W)	General Purpose I/O bit 5.7 Bit[0] In/Out : =1 Input, =0 Output Bit[1] Polarity : =1 Invert, =0 No Invert Bits[6:2] Reserved Bit[7] Output Type Select 1=Open Drain 0=Push Pull
GP64 Default = 0x01 on VTR POR (All except SCH3224)	56 (R/W)	General Purpose I/O bit 5.7 Bit[0] In/Out : =1 Input, =0 Output Bit[1] Polarity : =1 Invert, =0 No Invert Bit[2] Alternate Function Select 1=RXD4 0=GPIO Bits[6:3] Reserved Bit[7] Output Type Select 1=Open Drain 0=Push Pull
GP65 Default = 0x01 on VTR POR (SCH3224)	57 (R/W)	General Purpose I/O bit 5.7 Bit[0] In/Out : =1 Input, =0 Output Bit[1] Polarity : =1 Invert, =0 No Invert Bits[6:2] Reserved Bit[7] Output Type Select 1=Open Drain 0=Push Pull
GP65 Default = 0x01 on VTR POR (All except SCH3224)	57 (R/W)	General Purpose I/O bit 5.7 Bit[0] In/Out : =1 Input, =0 Output Bit[1] Polarity : =1 Invert, =0 No Invert Bit[2] Alternate Function Select 1=TXD4 0=GPIO Bits[6:3] Reserved Bit[7] Output Type Select 1=Open Drain 0=Push Pull
GP66 Default = 0x01 on VTR POR (SCH3224)	58 (R/W)	General Purpose I/O bit 5.7 Bit[0] In/Out : =1 Input, =0 Output Bit[1] Polarity : =1 Invert, =0 No Invert Bits[6:2] Reserved Bit[7] Output Type Select 1=Open Drain 0=Push Pull
GP66 Default = 0x01 on VTR POR (All except SCH3224)	58 (R/W)	General Purpose I/O bit 5.7 Bit[0] In/Out : =1 Input, =0 Output Bit[1] Polarity : =1 Invert, =0 No Invert Bit[2] Alternate Function Select 1=nDSR4 0=GPIO Bits[6:3] Reserved Bit[7] Output Type Select 1=Open Drain 0=Push Pull
GP67 Default = 0x01 on VTR POR (SCH3224)	59 (R/W)	General Purpose I/O bit 5.7 Bit[0] In/Out : =1 Input, =0 Output Bit[1] Polarity : =1 Invert, =0 No Invert Bits[6:2] Reserved Bit[7] Output Type Select 1=Open Drain 0=Push Pull

TABLE 24-3: DETAILED RUNTIME REGISTER DESCRIPTION (CONTINUED)

Name	REG Offset (HEX)	Description
GP67 Default = 0x01 on VTR POR (All except SCH3224)	59 (R/W)	General Purpose I/O bit 5.7 Bit[0] In/Out : =1 Input, =0 Output Bit[1] Polarity : =1 Invert, =0 No Invert Bit[2] Alternate Function Select 1=nRTS4 0=GPIO Bits[6:3] Reserved Bit[7] Output Type Select 1=Open Drain 0=Push Pull
TEST Default = 0x00 on VBAT POR	5A (R)	Bits[0:1,5] MCHP Reserved bit. Must be written as a ‘0’. Bits[2:4,6:7] Reserved Read only.
DBLCLICK Default = 0x0C on VBAT POR	5B Bits [5:0] are R/W when Mouse_Specific_ Wake register- Bit [7] is ‘0’ Bits [5:0] are Read Only when Mouse_Specific_ Wake register- Bit [7] is ‘1’	Double Click for Specific Wake on Mouse Select Register The DBLCLICK contains a numeric value that determines the time interval used to check for a double mouse click. DBLCLICK is the time interval between mouse clicks. For example, if DBLCLICK is set to 0.5 seconds, you have one half second to click twice for a double-click. Bit[0:5] This field contains a six bit weighted sum value from 0 to 0x3Fh which provides a double click interval between 0.0859375 and 5.5 seconds. Each incremental digit has a weight of 0.0859375 seconds. Bit[6] Reserved - returns zero when read Bit[7] Spinup delay 1= zero delay for spinup following VTR POR 0 = spinup delay by 2 seconds (default)
Mouse_Specific_ Wake Default = 00h on VBAT POR Default = 0xxxxxxxb on VTR POR, VCC POR, and PCI Reset Note: The ‘x’ indicates bit is not affected by reset	5C R/W when Bit [7] is ‘0’ Read Only when Bit [7] is ‘1’	Specific Wake on Mouse Click Control Register Bit[0:1] MCHP Reserved bit. Must be written as a ‘0’. Bits[4:2] SPESME SELECT. These bits select which mouse event is/are routed to trigger a PME wake event. 000 = Any button click or any movement (left/right/middle) 001 = One click of left button. 010 = One click of right button. 011 = Any one click of left/right/middle button. 100 = Reserved 101 = Two times click of left button. 110 = Two times click of right button. 111 = Reserved Bit[5] Reserved. Read only zero. Bit[6] KB_MSE_SWAP. This bit swaps the Keyboard and Mouse Port interfaces. 0 = The Keyboard and Mouse Ports are not swapped. 1 = The Keyboard and Mouse Ports are swapped. Bit [7] Mouse_Specific_ Wake Lock (Note) (This bit is Reset on a VBAT POR, VTR POR, VCC POR, and PCI Reset) 0 = Mouse_Specific_ Wake, and DBLCLICK Registers are Read/Write. 1 = Mouse_Specific_ Wake, and DBLCLICK Registers are Read Only.
LED1 Default = 0x00 on VTR POR	5D (R/W)	LED1 Bit[1:0] LED1 Control 00=off 01=blink at 1Hz rate with a 50% duty cycle (0.5 sec on, 0.5 sec off) 10=Blink at ½ HZ rate with a 25% duty cycle (0.5 sec on, 1.5 sec off) 11=on Bits[7:2] Reserved

© 2016-2017 Microchip Technology Inc.

TABLE 24-3: DETAILED RUNTIME REGISTER DESCRIPTION (CONTINUED)

Name	REG Offset (HEX)	Description
LED2 Default = 0x00 on VTR POR	5E (R/W)	LED2 Bit[1:0] LED2 Control 00=off 01=blink at 1Hz rate with a 50% duty cycle (0.5 sec on, 0.5 sec off) 10=Blink at ½ HZ rate with a 25% duty cycle (0.5 sec on, 1.5 sec off) 11=on Bits[7:2] Reserved
Keyboard Scan Code – Make Byte 1 (MSB) Default = 0xE0 on Vbat POR	5F (R/W)	Keyboard Scan Code This register is used to decode the first byte received from keyboards that generate multi-byte make codes and for single byte make codes. Bit[0] LSB of Scan Code . . . . Bit[7] MSB of Scan Code **Note:** • The keyboard scan code registers default to the ACPI scan 2 Power make/break codes. (i.e., make=E0_37, break=E0_F0_37). • Programming this register to 0x00 indicates that this register a don't care. Any valid scan code that is received will be a match.
Keyboard Scan Code – Make Byte 2 (LSB) Default = 0x37 on Vbat POR	60 (R/W)	Keyboard Scan Code This register is used only for multi-byte make codes. It is used to decode the second byte received. Bit[0] LSB of Scan Code . . . . Bit[7] MSB of Scan Code **Note:** • The keyboard scan code registers default to the ACPI scan 2 Power make/break codes. (i.e., make=E0_37, break=E0_F0_37). • Programming this register to 0x00 indicates that this register a don't care. Any valid scan code that is received will be a match.
Keyboard Scan Code – Break Byte 1 (MSB) Default = 0xE0 on Vbat POR	61 (R/W)	Keyboard Scan Code This register is used to decode the first byte received from keyboards that generate multi-byte make codes and for single byte break codes. Bit[0] LSB of Scan Code . . . . Bit[7] MSB of Scan Code **Note:** • The keyboard scan code registers default to the ACPI scan 2 Power make/break codes. (i.e., make=E0_37, break=E0_F0_37). • Programming this register to 0x00 indicates that this register a don't care. Any valid scan code that is received will be a match.

TABLE 24-3: DETAILED RUNTIME REGISTER DESCRIPTION (CONTINUED)

Name	REG Offset (HEX)	Description
Keyboard Scan Code – Break Byte 2 Default = 0xF0 on Vbat POR	62 (R/W)	Keyboard Scan Code This register is used to decode the second byte received in multi-byte break codes. Bit[0] LSB of Scan Code . . . . Bit[7] MSB of Scan Code **Note:** • The keyboard scan code registers default to the ACPI scan 2 Power make/break codes. (i.e., make=E0_37, break=E0_F0_37). • Programming this register to 0x00 indicates that this register a don't care. Any valid scan code that is received will be a match.
Keyboard Scan Code – Break Byte 3 (LSB) Default = 0x37 on Vbat POR	63 (R/W)	Keyboard Scan Code This register is used to decode the third byte received in scan 2 multi-byte break codes. Bit[0] LSB of Scan Code . . . . Bit[7] MSB of Scan Code **Note:** • The keyboard scan code registers default to the ACPI scan 2 Power make/break codes. (i.e., make=E0_37, break=E0_F0_37). • Programming this register to 0x00 indicates that this register a don't care. Any valid scan code that is received will be a match.
Keyboard PWRBTN/SPEKEY Default = 6Ch on Vbat POR Default = 0xxxxxxxb on VTR POR, VCC POR, and PCI Reset Note: The 'x' indicates bit is not affected by reset	64 R/W when Bit [7] is '0' Read Only when Bit [7] is '1'	Bit[0] MCHP Reserved bit. Must be written as a '0'. Bit[1] MCHP Reserved bit. Must be written as a '0'. Bits[3:2] SPEKEY ScanCode. This bit is used to configure the hardware to decode a particular type of scan code. 00 = Single Byte, Scan Code Set 1 (Ex. make=37h and break=B7h) 01 =Multi-Byte, Scan Code Set 1 (Ex. make = E0h, 37h and break = E0h, B7h) 10 = Single Byte, Scan Code Set 2 (Ex. make=37h and break=F0h 37h) 11 = Multi-Byte, Scan Code Set 2 (Ex. make = E0h, 37h and break = E0h F0h 37h) (Default) Bits[5:4] Keyboard Power Button Release These bits are used to determine the pulse width of the Power Button event from the keyboard (KB_PB_STS). The wake on specific key can be configured to generate a PME event and/or power button event. If it is used to generate a power button event, the following bits will determine when the KB_PB_STS event is de-asserted. 00=De-assert KB_PB_STS 0.5sec after it is asserted (default) 01=De-assert KB_PB_STS after any valid scan code NOT EQUAL to the programmed make code. 10=De-assert KB_PB_STS when scan code received is equal to programmed break code 11=Reserved Bit[6] MCHP Reserved bit. Must be written as a '1'.

© 2016-2017 Microchip Technology Inc.

TABLE 24-3: DETAILED RUNTIME REGISTER DESCRIPTION (CONTINUED)

Name	REG Offset (HEX)	Description
Keyboard PWRBTN/SPEKEY (continued)		Bit [7] Keyboard PWRBTN/SPEKEY Lock (Note) (This bit is Reset on a Vbat POR, VTR POR, VCC POR, and PCI Reset) 0 = Keyboard PWRBTN/SPEKEY and Keyboard Scan Code Registers are Read/Write 1 = Keyboard PWRBTN/SPEKEY and Keyboard Scan Code Registers are Read Only **Note:** The following registers become Read-Only when Bit [7] is '1': • Keyboard Scan Code – Make Byte 1 at offset 5Fh • Keyboard Scan Code – Make Byte 2 at offset 60h • Keyboard Scan Code – Break Byte 1 at offset 61h • Keyboard Scan Code – Break Byte 2 at offset 62h • Keyboard Scan Code – Break Byte 3 at offset 63h • Keyboard PWRBTN/SPEKEY at offset 64h
WDT_TIME_OUT Default = 0x00 on VCC POR, VTR POR, and PCI Reset	65 (R/W)	Watch-dog Timeout Bit[0] Reserved Bit[1] Reserved Bits[6:2] Reserved, = 00000 Bit[7] WDT Time-out Value Units Select = 0 Minutes (default) = 1 Seconds
WDT_VAL Default = 0x00 on VCC POR, VTR POR, and PCI Reset	66 (R/W)	Watch-dog Timer Time-out Value Binary coded, units = minutes (default) or seconds, selectable via Bit[7] of WDT_TIME_OUT register (0x52). 0x00 Time out disabled 0x01 Time-out = 1 minute (second) ..... 0xFF Time-out = 255 minutes (seconds)
WDT_CFG Default = 0x00 on VCC POR, VTR POR, and PCI Reset	67 (R/W)	Watch-dog timer Configuration Bit[0] Reserved Bit[1] Keyboard Enable =1 WDT is reset upon a Keyboard interrupt. =0 WDT is not affected by Keyboard interrupts. Bit[2] Mouse Enable =1 WDT is reset upon a Mouse interrupt. =0 WDT is not affected by Mouse interrupts. Bit[3] Reserved Bits[7:4] WDT Interrupt Mapping 1111 = IRQ15 ..... 0011 = IRQ3 0010 = IRQ2 (Note) 0001 = IRQ1 0000 = Disable **Note:** IRQ2 is used for generating SMI events via the serial IRQ's stream. The WDT should not be configured for IRQ2 if the IRQ2 slot is enabled for generating an SMI event.

TABLE 24-3: DETAILED RUNTIME REGISTER DESCRIPTION (CONTINUED)

Name	REG Offset (HEX)	Description
WDT_CTRL Default = 0x00 on VCC POR and VTR POR Default = 0000000xb on PCI Reset Note: Bit[0] is not cleared by PCI Reset	68 (R/W) Bit[2] is Write-Only	Watch-dog timer Control Bit[0] Watch-dog Status Bit, R/W =1 WD timeout occurred =0 WD timer counting Bit[1] Reserved Bit[2] Force Timeout, W =1 Forces WD timeout event; this bit is self-clearing Bit[3] P20 Force Timeout Enable, R/W = 1 Allows rising edge of P20, from the Keyboard Controller, to force the WD timeout event. A WD timeout event may still be forced by setting the Force Timeout Bit, bit 2. **Note:** • If the P20 signal is high when the enable bit is set a WD timeout event will be generated. = 0 P20 activity does not generate the WD timeout event. • The P20 signal will remain high for a minimum of 1us and can remain high indefinitely. Therefore, when P20 forced timeouts are enabled, a self-clearing edge-detect circuit is used to generate a signal which is OR'ed with the signal generated by the Force Timeout Bit. Bit[7:4] Reserved. Set to 0
TEST Default=0x00 on Vbat POR	6D (R/W)	Test Register. Test Registers are reserved for MCHP. Users should not write to this register, may produce undesired results.
GP44 Default = 0x80 on VTR POR (SCH3227 or SCH3226, and STRAPOPT=0)	6Eh (R/W)	General Purpose I/O bit 4.4 Bit[0] In/Out : =1 Input, =0 Output Bit[1] Polarity : =1 Invert, =0 No Invert Bit[2] Alternate Function Select 1=GPIO 0=nIDE_RSTDRV (Default) Bits[6:3] Reserved Bit[7] Output Type Select 1=Open Drain 0=Push Pull
GP44 Default = 0x01 on VTR POR (SCH3222, SCH3224, or SCH3227 / SCH3226 with STRAPOPT=1)	6Eh (R/W)	General Purpose I/O bit 4.4 Bit[0] In/Out : =1 Input, =0 Output Bit[1] Polarity : =1 Invert, =0 No Invert Bit[2] Alternate Function Select 1=TXD6 0=GPIO (Default) Bits[6:3] Reserved Bit[7] Output Type Select 1=Open Drain 0=Push Pull
GP45 Default = 0x00 on VTR POR (SCH3227 or SCH3226, and STRAPOPT=0)	6Fh (R/W)	General Purpose I/O bit 4.4 Bit[0] In/Out : =1 Input, =0 Output Bit[1] Polarity : =1 Invert, =0 No Invert Bit[2] Alternate Function Select 1=GPIO 0=nPCI_RST1 (Default) Bits[6:3] Reserved Bit[7] Output Type Select 1=Open Drain 0=Push Pull

© 2016-2017 Microchip Technology Inc.

TABLE 24-3: DETAILED RUNTIME REGISTER DESCRIPTION (CONTINUED)

Name	REG Offset (HEX)	Description
GP45 Default = 0x01 on VTR POR (SCH3222, SCH3224, or SCH3227 / SCH3226 with STRAPOPT=1)	6Fh (R/W)	General Purpose I/O bit 4.4 Bit[0] In/Out : =1 Input, =0 Output Bit[1] Polarity : =1 Invert, =0 No Invert Bit[2] Alternate Function Select 1=RXD6 0=GPIO (Default) Bits[6:3] Reserved Bit[7] Output Type Select 1=Open Drain 0=Push Pull
HW_Reg INDEX Default=0x00 on VTR POR (All except SCH3222)	70 (R/W)	The register is used to access the registers located in the H/W Monitoring Register block. The value in this register is the register INDEX (address), which determines the register currently accessible.
HW_Reg DATA Default=0x00 on VTR POR (All except SCH3222)	71 (R/W)	This register is used to Read/Write the data in the hardware monitoring register that is currently INDEX'd. (See the HW_Reg INDEX register at offset 60h.)
GP46 Default = 0x00 on VTR POR (SCH3227 or SCH3226, and STRAPOPT=0)	72h (R/W)	General Purpose I/O bit 4.4 Bit[0] In/Out : =1 Input, =0 Output Bit[1] Polarity : =1 Invert, =0 No Invert Bit[2] Alternate Function Select 1=GPIO 0=nPCI_RST2 (Default) Bits[6:3] Reserved Bit[7] Output Type Select 1=Open Drain 0=Push Pull
GP46 Default = 0x01 on VTR POR (SCH3222, SCH3224, or SCH3227 / SCH3226 with STRAPOPT=1)	72h (R/W)	General Purpose I/O bit 4.4 Bit[0] In/Out : =1 Input, =0 Output Bit[1] Polarity : =1 Invert, =0 No Invert Bit[2] Alternate Function Select 1=nSCIN6 0=GPIO (Default) Bits[6:3] Reserved Bit[7] Output Type Select 1=Open Drain 0=Push Pull
GP47 Default = 0x00 on VTR POR (SCH3227 or SCH3226, and STRAPOPT=0)	73h (R/W)	General Purpose I/O bit 4.4 Bit[0] In/Out : =1 Input, =0 Output Bit[1] Polarity : =1 Invert, =0 No Invert Bit[2] Alternate Function Select 1=GPIO 0=nPCI_RST3 (Default) Bits[6:3] Reserved Bit[7] Output Type Select 1=Open Drain 0=Push Pull

TABLE 24-3: DETAILED RUNTIME REGISTER DESCRIPTION (CONTINUED)

Name	REG Offset (HEX)	Description
GP47 Default = 0x01 on VTR POR (SCH3222, SCH3224, or SCH3227 / SCH3226 with STRAPOPT=1)	73h (R/W)	General Purpose I/O bit 4.4 Bit[0] In/Out : =1 Input, =0 Output Bit[1] Polarity : =1 Invert, =0 No Invert Bit[2] Alternate Function Select 1=nSCOUT6 0=GPIO (Default) Bits[6:3] Reserved Bit[7] Output Type Select 1=Open Drain 0=Push Pull
N/A	74-7F (R)	Bits[7:0] Reserved – reads return 0

Note: When selecting an alternate function for a GPIO pin, all bits in the GPIO register must be properly programmed, including in/out, polarity and output type.

Note 24-18 If this pin is used for Ring Indicator wakeup, either the nRI2 event can be enabled via bit 1 in the PME_EN1 register or the GP50 PME event can be enabled via bit 0 in the PME_EN5 register.

Note 24-19 In order to use the P17 functions, the corresponding GPIO must be programmed for output, non-invert, and push-pull output type.

Note 24-20 If the EETI function is selected for this GPIO then both a high-to-low and a low-to-high edge will set the PME, SMI and MSC status bits.

Note 24-21 The nIO_SMI pin is inactive when the internal group SMI signal is inactive and when the SMI enable bit (EN_SMI, bit 7 of the SMI_EN2 register) is '0'. When the output buffer type is OD, nIO_SMI pin is floating when inactive; when the output buffer type is push-pull, the nIO_SMI pin is high when inactive.

Note 24-22 Bit3 of the PME_STS5 register may be set on a VCC POR. If GP53 is configured as input, then the corresponding PME status bits will be set on a VCC POR. These bits are R/W but have no effect on circuit operation.

Note 24-23 These bits are R/W but have no effect on circuit operation.

© 2016-2017 Microchip Technology Inc.

25.0 VALID POWER MODES

The following table shows the valid power states for each power supply to the device.

TABLE 25-1: VALID POWER STATES

Power Supply	Power State		
	S0-S2	S3	S4-S5
Vbat	On Off (Note 25-1)	On Off (Note 25-1)	On Off (Note 25-1)
VTR	On	On	On
VCC	On	Off	Off
HVTR	On (HVTR=VTR)	On (HVTR=VTR)	On (HVTR=VTR)

Note 25-1 Although this is not considered normal operating mode, Vbat = Off is a valid power state. When Vbat is off all battery backed system context will be lost.

26.0 OPERATIONAL DESCRIPTION

26.1 Maximum Ratings

Operating Temperature Range (Industrial) ..... -40°C to +85°C

Operating Temperature Range (Commercial) ..... 0°C to +70°C

Storage Temperature Range ..... -55° to +150°C

Lead Temperature Range ..... Refer to JEDEC Spec. J-STD-020b

Note: Stresses above those listed above and below could cause permanent damage to the device. This is a stress rating only and functional operation of the device at any other condition above those indicated in the operation sections of this specification is not implied. When powering this device from laboratory or system power supplies, it is important that the Absolute Maximum Ratings not be exceeded or device failure can result. Some power supplies exhibit voltage spikes on their outputs when the AC power is switched on or off. In addition, voltage transients on the AC power line may appear on the DC output. If this possibility exists, it is suggested that a clamp circuit be used.

26.1.1 SUPER I/O SECTION (PINS 3 TO 112)

Maximum V_{cc} ..... +5.0V

Negative Voltage on any pin, with respect to Ground ..... -0.3V

26.1.2 HARDWARE MONITORING BLOCK (PINS 1 AND 2 AND PINS 113 TO 119)

Maximum HVTR ..... +5.0V

Negative Voltage on any pin, with respect to Ground (Except analog inputs) ..... -0.3V

26.2 DC Electrical Characteristics

TABLE 26-1: BUFFER OPERATIONAL RATINGS

SUPER I/O BLOCK (T_A INDUSTRIAL = -40°C – +85°C, V_{CC} = +3.3 V ± 10%) OR (T_A COMMERCIAL = 0°C – +70°C, V_{CC} = +3.3 V ± 10%)						
Parameter	**Symbol**	**MIN**	**TYP**	**MAX**	**Units**	**Comments**
I Type Input Buffer						
Low Input Level	V_{ILI}			0.8	V	TTL Levels
High Input Level	V_{IHI}	2.0		5.5	V	
IS Type Input Buffer						
Low Input Level	V_{ILIS}			0.8	V	Schmitt Trigger
High Input Level	V_{IHIS}	2.2		5.5	V	Schmitt Trigger
Schmitt Trigger Hysteresis	V_{HYS}		100		mV	
O6 Type Buffer						
Low Output Level	V_{OL}			0.4	V	I_{OL} = 6mA
High Output Level	V_{OH}	2.4			V	I_{OH} = -3mA
O8 Type Buffer						
Low Output Level	V_{OL}			0.4	V	I_{OL} = 8mA
High Output Level	V_{OH}	2.4			V	I_{OH} = -4mA

© 2016-2017 Microchip Technology Inc.

TABLE 26-1: BUFFER OPERATIONAL RATINGS (CONTINUED)

SUPER I/O BLOCK (T_A INDUSTRIAL = -40°C – +85°C, V_{CC} = +3.3 V ± 10%) OR (T_A COMMERCIAL = 0°C – +70°C, V_{CC} = +3.3 V ± 10%)						
Parameter	**Symbol**	**MIN**	**TYP**	**MAX**	**Units**	**Comments**
OD4 Type Buffer						
Low Output Level	V_{OL}			0.4	V	I_{OL} = 4mA
High Output Level	V_{OH}			5.5	V	Open Drain;
OD8 Type Buffer						
Low Output Level	V_{OL}			0.4	V	I_{OL} = 8mA
High Output Level	V_{OH}			5.5	V	Open Drain;
O12 Type Buffer						
Low Output Level	V_{OL}			0.4	V	I_{OL} = 12mA
High Output Level	V_{OH}	2.4			V	I_{OH} = -6mA
OD12 Type Buffer						
Low Output Level	V_{OL}			0.4	V	I_{OL} = 12mA
High Output Level	V_{OH}			5.5	V	Open Drain;
OD14 Type Buffer						
Low Output Level	V_{OL}			0.4	V	I_{OL} = 14mA
High Output Level	V_{OH}			5.5	V	Open Drain;
OP14 Type Buffer						
Low Output Level	V_{OL}			0.4	V	I_{OL} = 14mA
High Output Level	V_{OH}	2.4			V	I_{OH} = -14mA
IO8 Type Buffer						
Low Input Level	V_{ILI}			0.8	V	TTL Levels
High Input Level	V_{IHI}	2.0		5.5	V	
Low Output Level	V_{OL}			0.4	V	I_{OL} = 8mA
High Output Level	V_{OH}	2.4			V	I_{OH} = -4mA
IS/O8 Type Buffer						
Low Input Level	V_{ILI}			0.8	V	Schmitt Trigger
High Input Level	V_{IHI}	2.2		5.5	V	Schmitt Trigger
Schmitt Trigger Hysteresis	V_{HYS}		100		mV	
Low Output Level	V_{OL}			0.4	V	I_{OL} = 8mA
High Output Level	V_{OH}	2.4			V	I_{OH} = -4mA

TABLE 26-1: BUFFER OPERATIONAL RATINGS (CONTINUED)

SUPER I/O BLOCK (T_A INDUSTRIAL = -40°C – +85°C, V_{CC} = +3.3 V ± 10%) OR (T_A COMMERCIAL = 0°C – +70°C, V_{CC} = +3.3 V ± 10%)						
Parameter	**Symbol**	**MIN**	**TYP**	**MAX**	**Units**	**Comments**
IO12 Type Buffer						
Low Input Level	V_{ILI}			0.8	V	TTL Levels
High Input Level	V_{IHI}	2.0		5.5	V	
Low Output Level	V_{OL}			0.4	V	I_{OL} = 12mA
High Output Level	V_{OH}	2.4			V	I_{OH} = -6mA
IOP14 Type Buffer						
Low Input Level	V_{ILI}			0.8	V	TTL Levels
High Input Level	V_{IHI}	2.0		5.5	V	
Low Output Level	V_{OL}			0.4	V	I_{OL} = 14mA
High Output Level	V_{OH}	2.4			V	I_{OH} = -14mA
IOD16 Type Buffer						
Low Input Level	V_{ILI}			0.8	V	TTL Levels
High Input Level	V_{IHI}	2.0		5.5	V	
Low Output Level	V_{OL}			0.4	V	I_{OL} = 16mA
High Output Level	V_{OH}			5.5	V	Open Drain;
OD_PH Type Buffer	VOL			0.3	V	RLOAD is 40ohms to 1.2V Max Output impedance is 10ohms
PCI Type Buffers (PCI_ICLK, PCI_I, PCI_O, PCI_IO)	3.3V PCI 2.1 Compatible.					
Leakage Current (ALL)						(Note 26-1)
Input High Current	$ILEAK_{IH}$			10	µA	$V_{IN} = V_{CC}$
Input Low Current	$ILEAK_{IL}$			-10	µA	V_{IN} = 0V
Backdrive Protect/ChiProtect (All signal pins excluding LAD[3:0], LDRQ#, LFRAME#)						
Input High Current	$ILEAK_{IH}$			10	µA	V_{CC} = 0V V_{IN} = 5.5V Max
Input Low Current	$ILEAK_{IL}$			-10	µA	V_{IN} = 0V

© 2016-2017 Microchip Technology Inc.

TABLE 26-1: BUFFER OPERATIONAL RATINGS (CONTINUED)

SUPER I/O BLOCK (T_A INDUSTRIAL = -40°C – +85°C, V_{CC} = +3.3 V ± 10%) OR (T_A COMMERCIAL = 0°C – +70°C, V_{CC} = +3.3 V ± 10%)						
Parameter	**Symbol**	**MIN**	**TYP**	**MAX**	**Units**	**Comments**
5V Tolerant Pins (All signal pins excluding LAD[3:0], LDRQ#, LFRAME#) Inputs and Outputs in High Impedance State						
Input High Current	$ILEAK_{IH}$			10	µA	V_{CC} = 0V V_{IN} = 5.5V Max
Input Low Current	$ILEAK_{IL}$			-10	µA	V_{IN} = 0V
LPC Bus Pins (LAD[3:0], LDRQ#, LFRAME#)						
Input High Current	$ILEAK_{IH}$			10	µA	V_{CC} = 0V and V_{CC} = 3.3V V_{IN} = 3.6V Max
Input Low Current	$ILEAK_{IL}$			-10	µA	V_{IN} = 0V
V_{CC} Supply Current Active	I_{CC}			1 (Note 26-2)	mA	All outputs open, all inputs transitioning from/to 0V to/from 3.3V.
Trickle Supply Voltage	V_{TR}	2.97 (Note 26-3)	3.3	3.63	V	
V_{TR} Supply Current Active	I_{TR}			20 (Note 26-2, Note 26-4)	mA	All outputs, all inputs transitioning from/to 0V to/from 3.3V.
Battery Supply Voltage	V_{BAT}	2.2	3.0	3.6	V	
V_{BAT} Average Supply Current Active					µA	All outputs open, all inputs transitioning to/from 0V from/to 3.0V).
V_{BAT} Monitoring Active	$I_{BAT, AVG}$			1.5		
V_{BAT} Monitoring Disabled	$I_{BAT, AVG}$			1.0		
V_{BAT} Peak Supply Current Active **V_{BAT} Monitoring Active**	$I_{BAT, Peak}$			10	µA	All outputs open, all inputs transitioning to/from 0V from/to 3.0V).

HARDWARE MONITORING BLOCK (T_A = 0°C – +70°C, HVTR = +3.3 V ± 10%)						
Parameter	**Symbol**	**Min**	**Typ**	**Max**	**Units**	**Comments**
Temperature-to-Digital Converter Characteristics						
Internal Temperature Accuracy		-3	±0.25	+3	°C	0°C <= T_A <= 70°C
		-2		+2	°C	40°C <= T_A <= 70°C
External Diode Sensor Accuracy					°C	Resolution
		-5	±0.25	+5	°C	-40°C <= T_S <= 125°C
		-3		+3	°C	40°C <= T_S <= 100°C
					°C	Resolution

HARDWARE MONITORING BLOCK (T_A = 0°C – +70°C, HVTR = +3.3 V ± 10%)						
Parameter	**Symbol**	**Min**	**Typ**	**Max**	**Units**	**Comments**
Analog-to-Digital Converter Characteristics						
Total Unadjusted Error	TUE			±2	%	Note 26-5
Differential Non-Linearity	DNL		±1		LSB	
Power Supply Sensitivity	PSS		±1		%/V	
Total Monitoring Cycle Time (Cycle Mode, Default Averaging)	$t_{C(Cycle)}$		1.25	1.4	sec	Note 26-6
Conversion Time (Continuous Mode, Default Averaging)	$t_{C(Cts)}$	225	247	275	msec	Note 26-7
Input Resistance			140	200	kΩ	
ADC Resolution						10 bits Note 26-10
Input Buffer (I) (FANTACH1)						
Low Input Level	V_{ILI}			0.8	V	
High Input Level	V_{IHI}	2.0		Vcc+0.3	V	
Input Buffer (I) (FANTACH2-FANTACH3)						
Low Input Level	V_{ILI}			0.8	V	
High Input Level	V_{IHI}	2.0		5.5	V	
I_VID Type Buffer (GP62* to GP67*)						(Note 26-11)
Low Input Level	V_{ILI}			0.4	V	
High Input Level	V_{IHI}	0.8		5.5	V	
IOD Type Buffer (PWM1, PWM2, PWM3/ADDRESS ENABLE, nHWM_INT						
Low Input Level	V_{ILI}			0.8	V	
High Input Level	V_{IHI}	2.0		5.5	V	
Hysteresis	V_{HYS}		500		mV	
Low Output Level	V_{OL}			0.4	V	I_{OL} = +4.0 mA (Note 26-9)
Leakage Current (ALL - Digital)						(Note 26-8)
Input High Current	$ILEAK_{IH}$			10	µA	$V_{IN} = V_{CC}$
Input Low Current	$ILEAK_{IL}$			-10	µA	V_{IN} = 0V
Digital Input Capacitance	C_{IN}			10	pF	

© 2016-2017 Microchip Technology Inc.

HARDWARE MONITORING BLOCK (T_A = 0°C – +70°C, HVTR = +3.3 V ± 10%)						
Parameter	**Symbol**	**Min**	**Typ**	**Max**	**Units**	**Comments**
H_{VTR} Supply Current						
Active Mode	I_{HTR}			2	µA	All outputs open, all inputs transitioning from/to 0V to/from 3.3V.

HARDWARE MONITORING BLOCK (T_A = -40°C – +85°C, HVTR = +3.3 V ± 10%)						
Parameter	**Symbol**	**Min**	**Typ**	**Max**	**Units**	**Comments**
Temperature-to-Digital Converter Characteristics						
Internal Temperature Accuracy		-3	±0.25	+3	°C	0°C <= T_A <= 85°C
		-2		+3	°C	40°C <= T_A <= 85°C
External Diode Sensor Accuracy					°C	Resolution
		-5	±0.25	+5	°C	-40°C <= T_S <= 125°C
		-3		+3	°C	40°C <= T_S <= 100°C
					°C	Resolution
Analog-to-Digital Converter Characteristics						
Total Unadjusted Error	TUE			±2	%	Note 26-5
Differential Non-Linearity	DNL		±1		LSB	
Power Supply Sensitivity	PSS		±2		%/V	
Total Monitoring Cycle Time (Cycle Mode, Default Averaging)	$t_{C(Cycle)}$		1.25	1.4	sec	Note 26-6
Conversion Time (Continuous Mode, Default Averaging)	$t_{C(Cts)}$	225	247	275	msec	Note 26-7
Input Resistance			140	200	kΩ	
ADC Resolution						10 bits Note 26-10
Input Buffer (I) (FANTACH1)						
Low Input Level	V_{ILI}			0.8	V	
High Input Level	V_{IHI}	2.0		Vcc+0.3	V	
Input Buffer (I) (FANTACH2-FANTACH3)						
Low Input Level	V_{ILI}			0.8	V	
High Input Level	V_{IHI}	2.0		5.5	V	
I_VID Type Buffer (GP62* to GP67*)						(Note 26-11)
Low Input Level	V_{ILI}			0.4	V	
High Input Level	V_{IHI}	0.8		5.5	V	

HARDWARE MONITORING BLOCK (T_A = -40°C – +85°C, HVTR = +3.3 V ± 10%)						
Parameter	**Symbol**	**Min**	**Typ**	**Max**	**Units**	**Comments**
IOD Type Buffer (PWM1, PWM2, PWM3/ADDRESS ENABLE, nHWM_INT						
Low Input Level	V_{ILI}			0.8	V	
High Input Level	V_{IHI}	2.0		5.5	V	
Hysteresis	V_{HYS}		500		mV	
Low Output Level	V_{OL}			0.4	V	I_{OL} = +4.0 mA (Note 26-9)
Leakage Current (ALL - Digital)						(Note 26-8)
Input High Current	$ILEAK_{IH}$			10	µA	$V_{IN} = V_{CC}$
Input Low Current	$ILEAK_{IL}$			-10	µA	V_{IN} = 0V
Digital Input Capacitance	C_{IN}			10	pF	
H_{VTR} Supply Current Active Mode	I_{HTR}			2	µA	All outputs open, all inputs transitioning from/to 0V to/from 3.3V.

Note 1: Voltages are measured from the local ground potential, unless otherwise specified.

2: Typicals are at TA=25°C and represent most likely parametric norm.

3: The maximum allowable power dissipation at any temperature is PD = (TJmax - TA) / QJA.

4: Timing specifications are tested at the TTL logic levels, VIL=0.4V for a falling edge and VIH=2.4V for a rising edge. TRI-STATE output voltage is forced to 1.4V.

Note 26-1 All leakage currents are measured with all pins in high impedance.

Note 26-2 These values are estimated. They will be updated after Characterization. Contact Microchip for the latest values.

Note 26-3 The minimum value given for V_{TR} applies when V_{CC} is active. When V_{CC} is 0V, the minimum V_{TR} is 0V.

Note 26-4 Max I_{TRI} with V_{CC} = 3.3V (nominal) is 10mA
Max I_{TRI} with V_{CC} = 0V (nominal) is 250uA

Note 26-5 TUE (Total Unadjusted Error) includes Offset, Gain and Linearity errors of the ADC.

Note 26-6 Total Monitoring Cycle Time for cycle mode includes a one second delay plus all temperature conversions and all analog input voltage conversions.

Note 26-7 Only the nominal default case is shown in this section.

Note 26-8 All leakage currents are measured with all pins in high impedance.

Note 26-9 The low output level for PWM pins is actually +8.0mA.

Note 26-10 The h/w monitor analog block implements a 10-bit ADC. The output of this ADC goes to an average block, which can be configured to accumulate the averaged value of the analog inputs. The amount of averaging is programmable. The output of the averaging block produce a 12-bit temperature or voltage reading value. The 8 MSbits go to the reading register and the 4 LSbits to the A/D LSb register.

Note 26-11 Other platform components may use VID inputs and may require tighter limits.

© 2016-2017 Microchip Technology Inc.

26.3 Capacitance Values for Pins

The input and output capacitance applies to both the Super I/O Block and the Hardware Monitoring Block digital pins.

TABLE 26-2: CAPACITANCE T_A = 25; FC = 1MHZ; V_{CC} = 3.3V ±10%

Limits						
Parameter	**Symbol**	**MIN**	**TYP**	**MAX**	**Units**	**Test Condition**
Clock Input Capacitance	C_{IN}			20	pF	All pins except pin under test tied to AC ground
Input Capacitance	C_{IN}			10	pF	
Output Capacitance	C_{OUT}			20	pF	

Note: The input capacitance of a port is measured at the connector pins.

26.4 Reset Generators

TABLE 26-3: RESET GENERATORS

Supply	Trip Point	Tolerance
3.3V, 3.3V VTR	2.8V	±100 mV
5.0V	4.45V	±150mV

27.0 TIMING DIAGRAMS

For the Timing Diagrams shown, the following capacitive loads are used on outputs.

Name	Capacitance Total (pF)
SER_IRQ	50
LAD [3:0]	50
LDRQ#	50
nDIR	240
nSTEP	240
nDS0	240
PD[0:7]	240
nSTROBE	240
nALF	240
KDAT	240
KCLK	240
MDAT	240
MCLK	240
LED1	50
LED2	50
TXD1	50
TXD2	50
TXD3	50
TXD4	50
TXD5	50
TXD6	50

27.1 Power Up Timing

FIGURE 27-1: POWER-UP TIMING

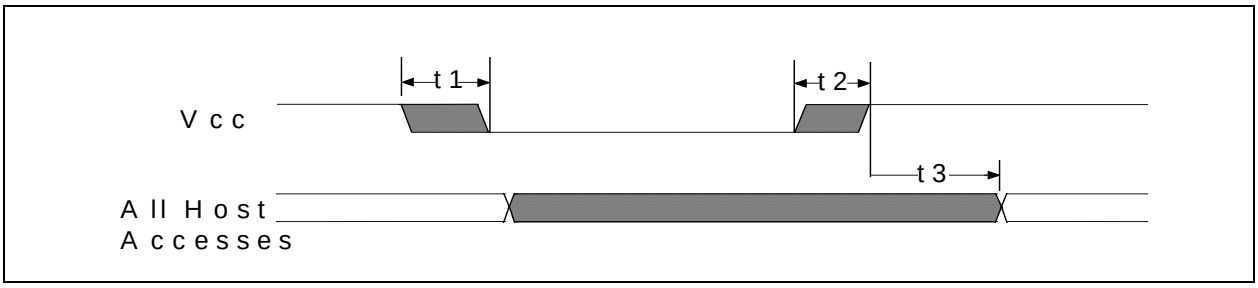

Name	Description	MIN	TYP	MAX	Units
t1	Vcc Slew from 2.7V to 0V	300			µs
t2	Vcc Slew from 0V to 2.7V	100			µs
t3	All Host Accesses After Power-up (See Note 27-1)	125		500	µs

Note 27-1 Internal write-protection period after Vcc passes 2.7 volts on power-up.

© 2016-2017 Microchip Technology Inc.

27.2 Input Clock Timing

FIGURE 27-2: INPUT CLOCK TIMING

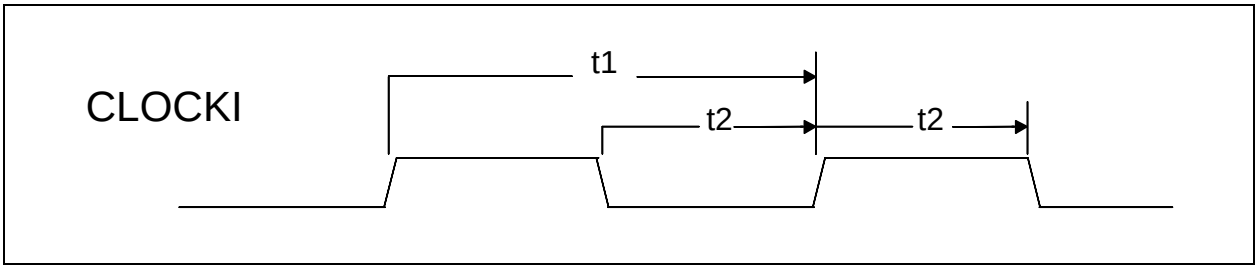

Name	Description	MIN	TYP	MAX	Units
t1	Clock Cycle Time for 14.318MHZ		69.84		ns
t2	Clock High Time/Low Time for 14.318MHz	20	35		ns
	Clock Rise Time/Fall Time (not shown)			5	ns

27.3 LPC Interface Timing

FIGURE 27-3: PCI CLOCK TIMING

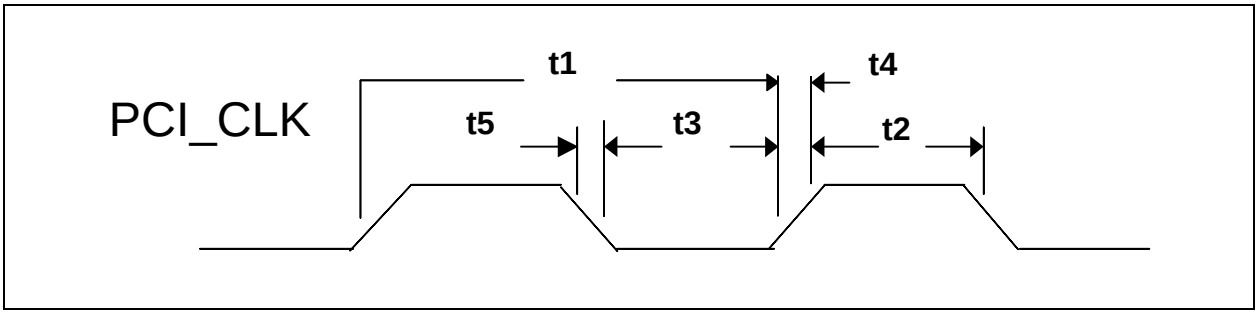

Name	Description	MIN	TYP	MAX	Units
t1	Period	30		33.3	nsec
t2	High Time	12			nsec
t3	Low Time	12			nsec
t4	Rise Time			3	nsec
t5	Fall Time			3	nsec

FIGURE 27-4: RESET TIMING

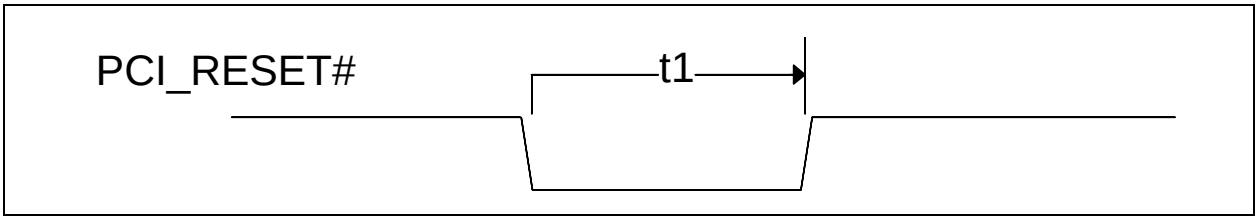

Name	Description	MIN	TYP	MAX	Units
t1	PCI_RESET# width	1			ms

FIGURE 27-5: OUTPUT TIMING MEASUREMENT CONDITIONS, LPC SIGNALS

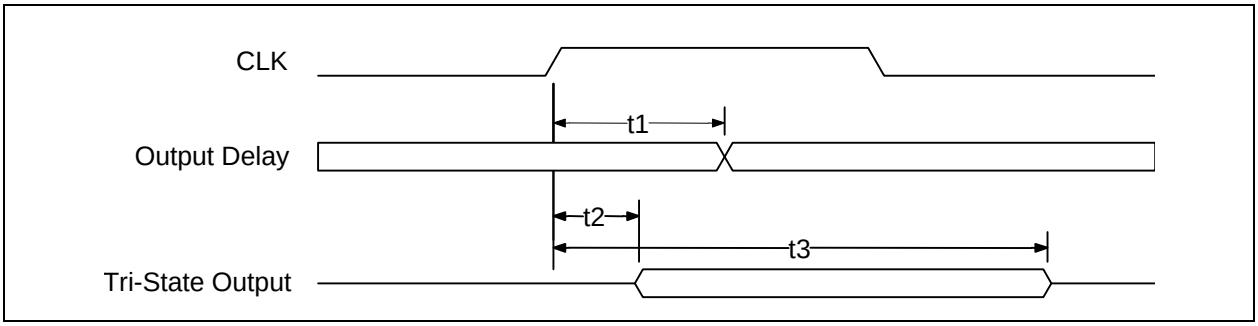

Name	Description	MIN	TYP	MAX	Units
t1	CLK to Signal Valid Delay – Bused Signals	2		11	ns
t2	Float to Active Delay	2		11	ns
t3	Active to Float Delay			28	ns

FIGURE 27-6: INPUT TIMING MEASUREMENT CONDITIONS, LPC SIGNALS

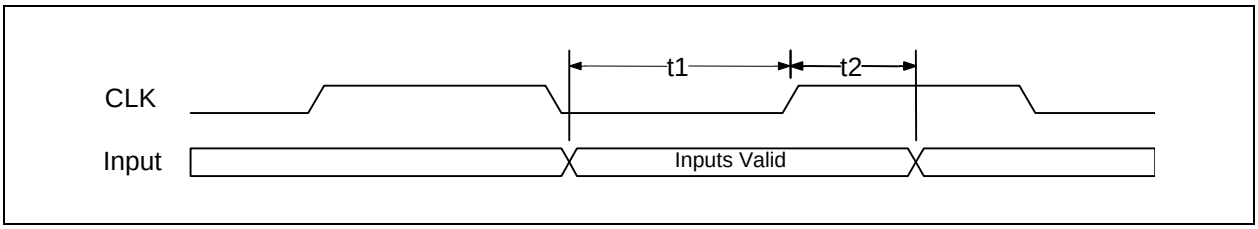

Name	Description	MIN	TYP	MAX	Units
t1	Input Set Up Time to CLK – Bused Signals	7			ns
t2	Input Hold Time from CLK	0			ns

Note: L1=Start; L2=CYCTYP+DIR; L3=Sync of 0000

© 2016-2017 Microchip Technology Inc.

FIGURE 27-7: I/O WRITE

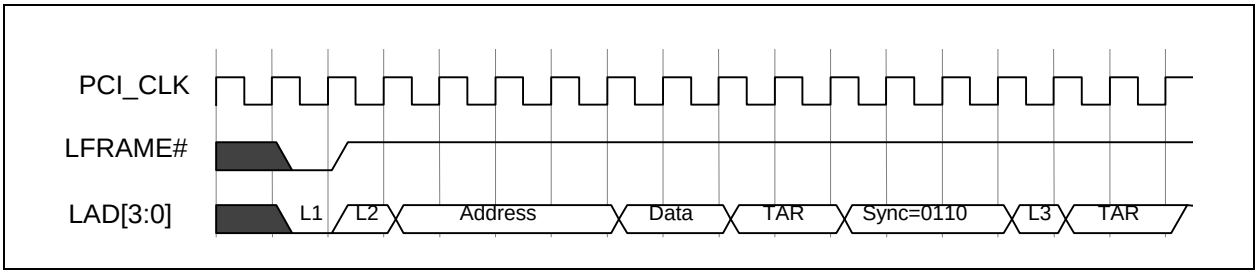

FIGURE 27-8: I/O READ

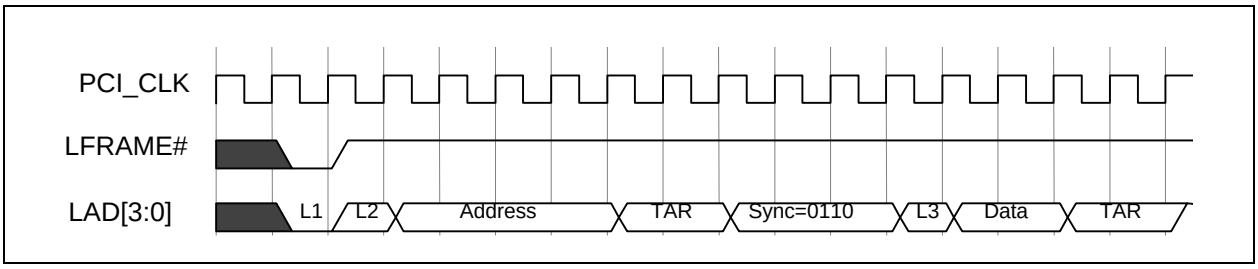

Note: L1=Start; L2=CYCTYP+DIR; L3=Sync of 0000

FIGURE 27-9: DMA REQUEST ASSERTION THROUGH LDRQ#

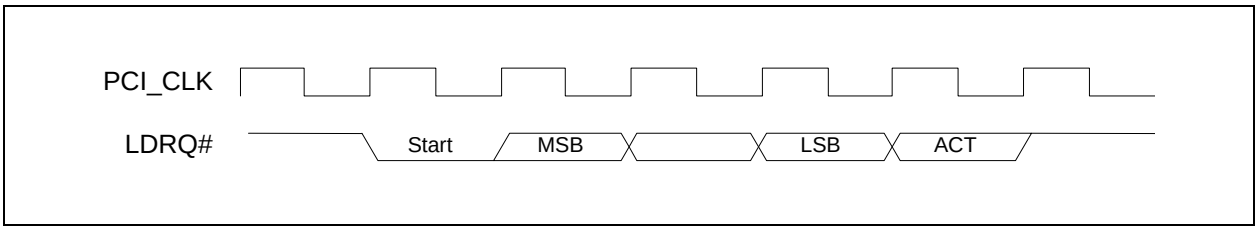

FIGURE 27-10: DMA WRITE (FIRST BYTE)

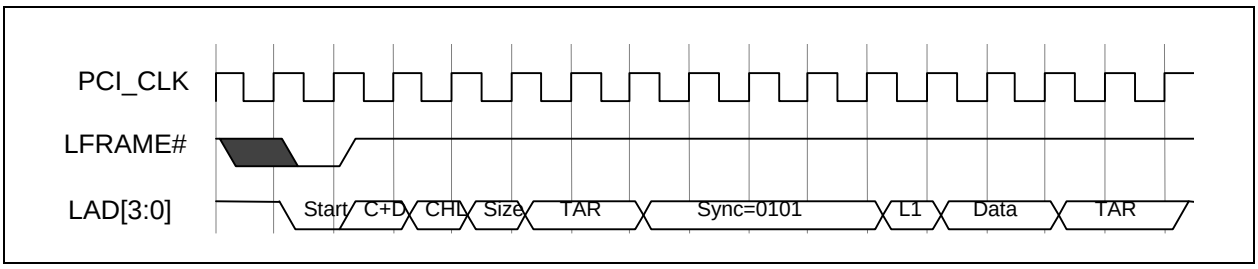

Note: L1=Sync of 0000

FIGURE 27-11: DMA READ (FIRST BYTE)

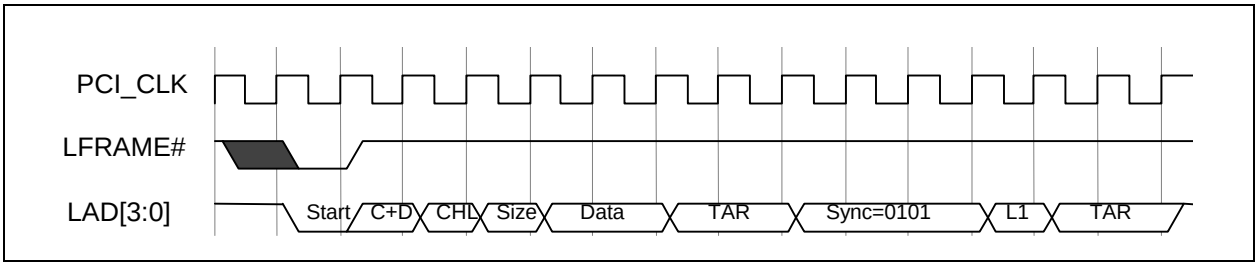

Note: L1=Sync of 0000

27.4 Parallel Port Timing

FIGURE 27-12: EPP 1.9 DATA OR ADDRESS WRITE CYCLE

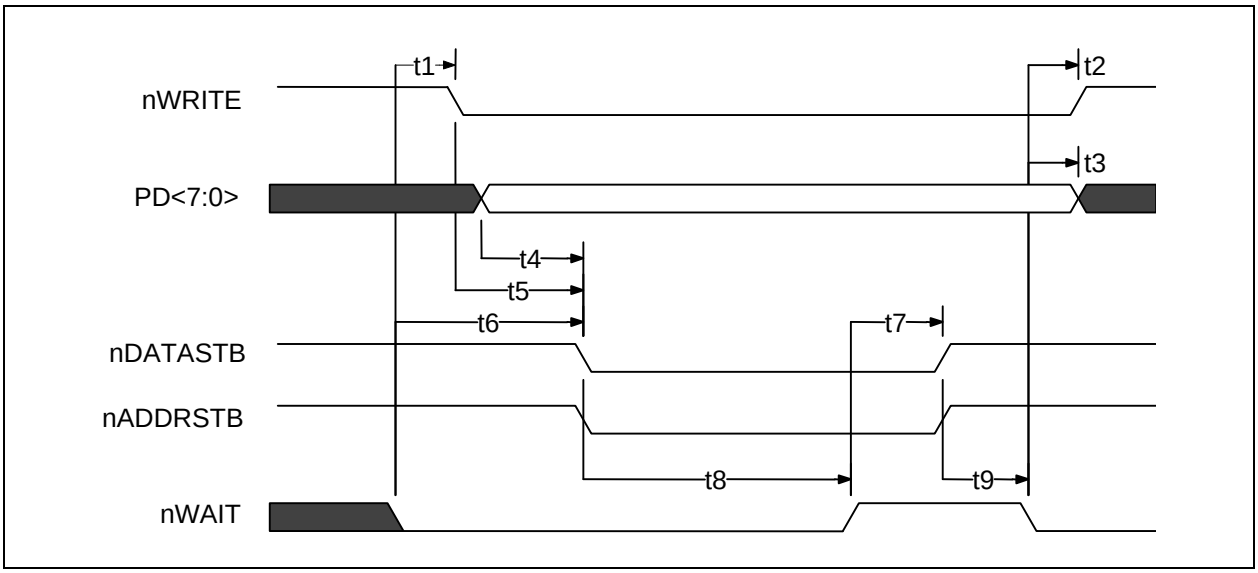

Name	Description	MIN	TYP	MAX	Units
t1	nWAIT Asserted to nWRITE Asserted (See Note 27-2)	60		185	ns
t2	nWAIT Asserted to nWRITE Change (See Note 27-2)	60		185	ns
t3	nWAIT Asserted to PDATA Invalid (See Note 27-2)	0			ns
t4	PDATA Valid to Command Asserted	10			ns
t5	nWRITE to Command Asserted	5		35	ns
t6	nWAIT Asserted to Command Asserted (See Note 27-2)	60		210	ns
t7	nWAIT Deasserted to Command Deasserted (See Note 27-2)	60		190	ns
t8	Command Asserted to nWAIT Deasserted	0		10	µs
t9	Command Deasserted to nWAIT Asserted	0			ns

Note 27-2 nWAIT must be filtered to compensate for ringing on the parallel bus cable. nWAIT is considered to have settled after it does not transition for a minimum of 50 nsec.

© 2016-2017 Microchip Technology Inc.

FIGURE 27-13: EPP 1.9 DATA OR ADDRESS READ CYCLE

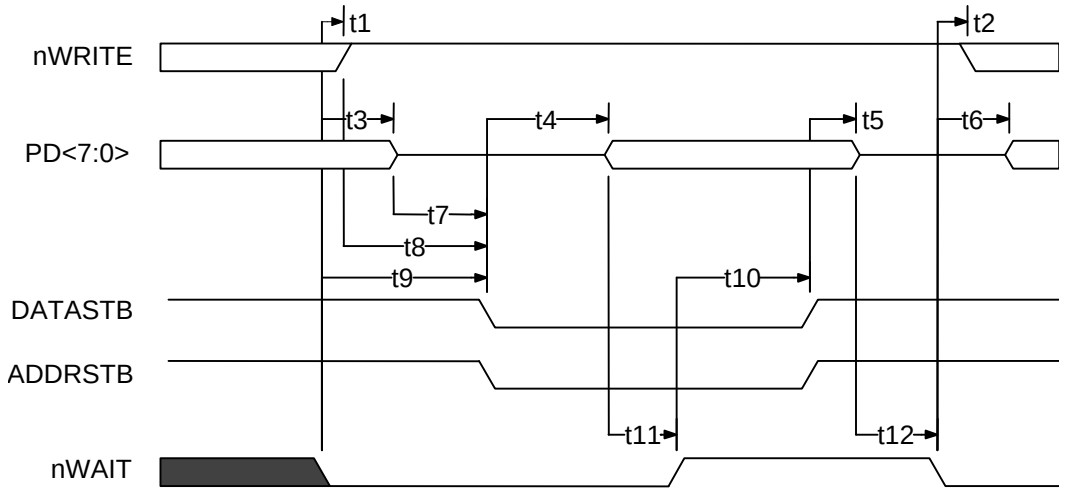

Name	Description	MIN	TYP	MAX	Units
t1	nWAIT Asserted to nWRITE Deasserted	0		185	ns
t2	nWAIT Asserted to nWRITE Modified (Notes 1,2)	60		190	ns
t3	nWAIT Asserted to PDATA Hi-Z (Note 1)	60		180	ns
t4	Command Asserted to PDATA Valid	0			ns
t5	Command Deasserted to PDATA Hi-Z	0			ns
t6	nWAIT Asserted to PDATA Driven (Note 1)	60		190	ns
t7	PDATA Hi-Z to Command Asserted	0		30	ns
t8	nWRITE Deasserted to Command	1			ns
t9	nWAIT Asserted to Command Asserted	0		195	ns
t10	nWAIT Deasserted to Command Deasserted (Note 1)	60		180	ns
t11	PDATA Valid to nWAIT Deasserted	0			ns
t12	PDATA Hi-Z to nWAIT Asserted	0			µs

Note 1: nWAIT is considered to have settled after it does not transition for a minimum of 50 ns.

2: When not executing a write cycle, EPP nWRITE is inactive high.

FIGURE 27-14: EPP 1.7 DATA OR ADDRESS WRITE CYCLE

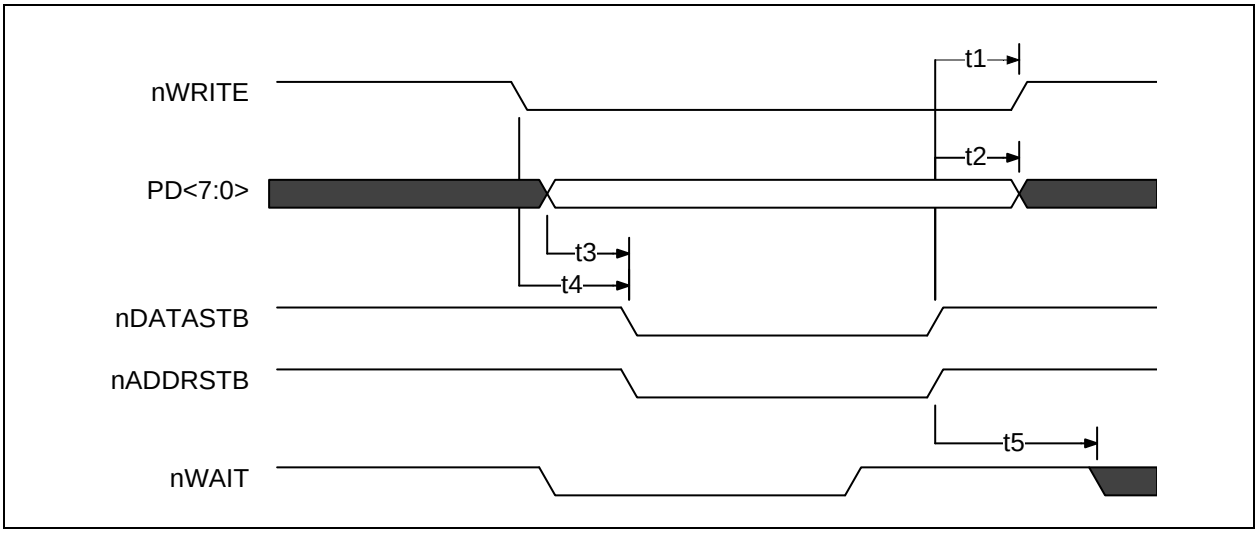

Name	Description	MIN	TYP	MAX	Units
t1	Command Deasserted to nWRITE Change	0		40	ns
t2	Command Deasserted to PDATA Invalid	50			ns
t3	PDATA Valid to Command Asserted	10		35	ns
t4	nWRITE to Command	5		35	ns
t5	Command Deasserted to nWAIT Deasserted	0			ns

FIGURE 27-15: EPP 1.7 DATA OR ADDRESS READ CYCLE

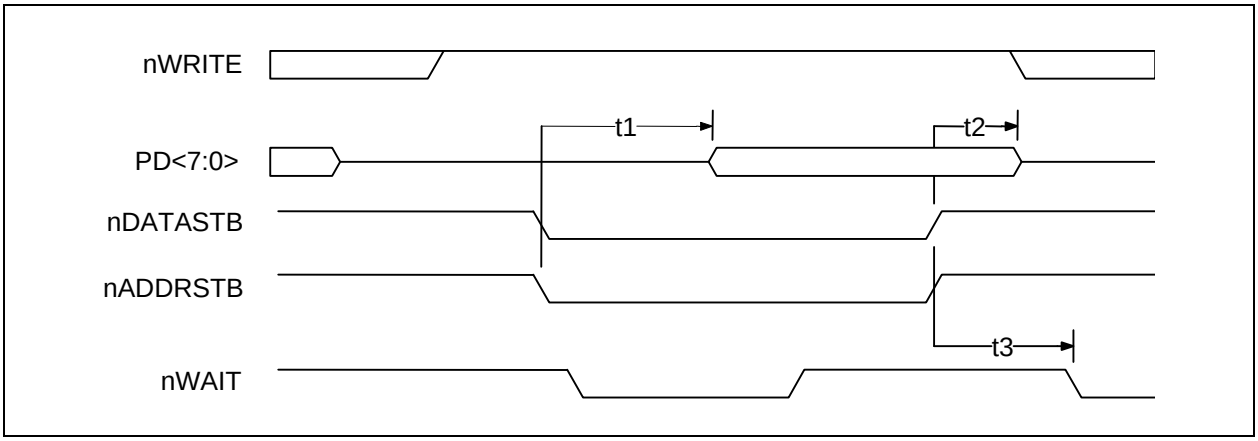

Name	Description	MIN	TYP	MAX	Units
t1	Command Asserted to PDATA Valid	0			ns
t2	Command Deasserted to PDATA Hi-Z	0			ns
t3	Command Deasserted to nWAIT Deasserted	0			ns

© 2016-2017 Microchip Technology Inc.

27.4.1 ECP PARALLEL PORT TIMING

Parallel Port FIFO (Mode 101)

The standard parallel port is run at or near the peak 500KBytes/sec allowed in the forward direction using DMA. The state machine does not examine nACK and begins the next transfer based on Busy. Refer to FIGURE 27-16: on page 268.

ECP Parallel Port Timing

The timing is designed to allow operation at approximately 2.0 Mbytes/sec over a 15ft cable. If a shorter cable is used then the bandwidth will increase.

Forward-Idle

When the host has no data to send it keeps HostClk (nStrobe) high and the peripheral will leave PeriphClk (Busy) low.

Forward Data Transfer Phase

The interface transfers data and commands from the host to the peripheral using an interlocked PeriphAck and HostClk. The peripheral may indicate its desire to send data to the host by asserting nPeriphRequest.

The Forward Data Transfer Phase may be entered from the Forward-Idle Phase. While in the Forward Phase the peripheral may asynchronously assert the nPeriphRequest (nFault) to request that the channel be reversed. When the peripheral is not busy it sets PeriphAck (Busy) low. The host then sets HostClk (nStrobe) low when it is prepared to send data. The data must be stable for the specified setup time prior to the falling edge of HostClk. The peripheral then sets PeriphAck (Busy) high to acknowledge the handshake. The host then sets HostClk (nStrobe) high. The peripheral then accepts the data and sets PeriphAck (Busy) low, completing the transfer. This sequence is shown in FIGURE 27-17: on page 268.

The timing is designed to provide 3 cable round-trip times for data setup if Data is driven simultaneously with HostClk (nStrobe).

Reverse-Idle Phase

The peripheral has no data to send and keeps PeriphClk high. The host is idle and keeps HostAck low.

Reverse Data Transfer Phase

The interface transfers data and commands from the peripheral to the host using an interlocked HostAck and PeriphClk.

The Reverse Data Transfer Phase may be entered from the Reverse-Idle Phase. After the previous byte has been accepted the host sets HostAck (nALF) low. The peripheral then sets PeriphClk (nACK) low when it has data to send. The data must be stable for the specified setup time prior to the falling edge of PeriphClk. When the host is ready to accept a byte it sets HostAck (nALF) high to acknowledge the handshake. The peripheral then sets PeriphClk (nACK) high. After the host has accepted the data, it sets HostAck (nALF) low, completing the transfer. This sequence is shown in FIGURE 27-18: on page 269.

Output Drivers

To facilitate higher performance data transfer, the use of balanced CMOS active drivers for critical signals (Data, HostAck, HostClk, PeriphAck, PeriphClk) are used in ECP Mode. Because the use of active drivers can present compatibility problems in Compatible Mode (the control signals, by tradition, are specified as open-drain), the drivers are dynamically changed from open-drain to push-pull. The timing for the dynamic driver change is specified in the *IEEE 1284 Extended Capabilities Port Protocol and ISA Interface Standard, Rev. 1.14*, July 14, 1993, available from Microsoft. The dynamic driver change must be implemented properly to prevent glitching the outputs.

FIGURE 27-16: PARALLEL PORT FIFO TIMING

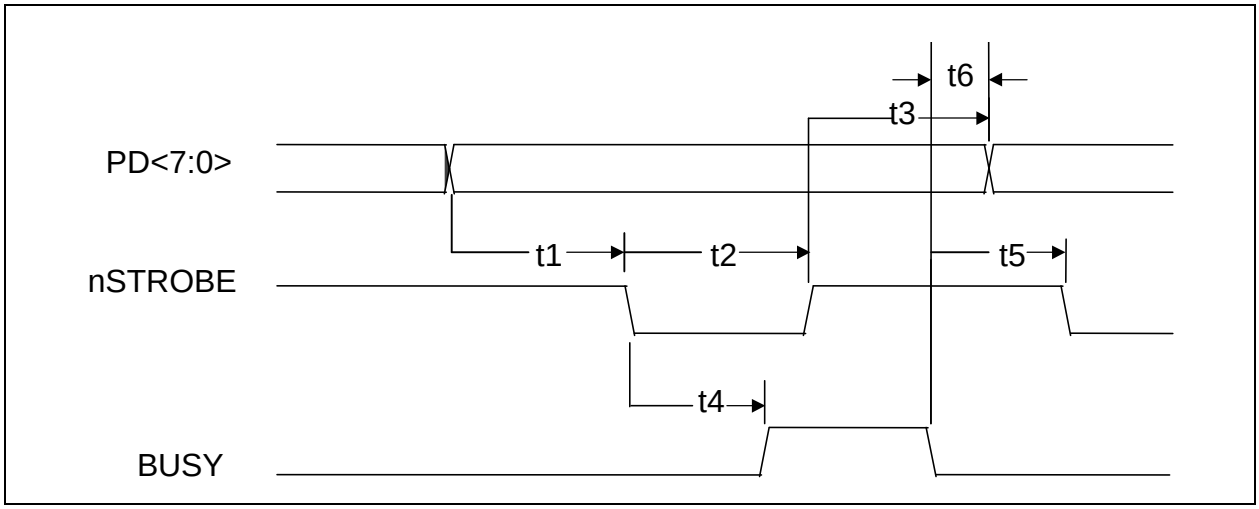

Name	Description	MIN	TYP	MAX	Units
t1	PDATA Valid to nSTROBE Active	600			ns
t2	nSTROBE Active Pulse Width	600			ns
t3	PDATA Hold from nSTROBE Inactive (See Note 27-3)	450			ns
t4	nSTROBE Active to BUSY Active			500	ns
t5	BUSY Inactive to nSTROBE Active	680			ns
t6	BUSY Inactive to PDATA Invalid (See Note 27-3)	80			ns

Note 27-3 The data is held until BUSY goes inactive or for time t3, whichever is longer. This only applies if another data transfer is pending. If no other data transfer is pending, the data is held indefinitely.

FIGURE 27-17: ECP PARALLEL PORT FORWARD TIMING

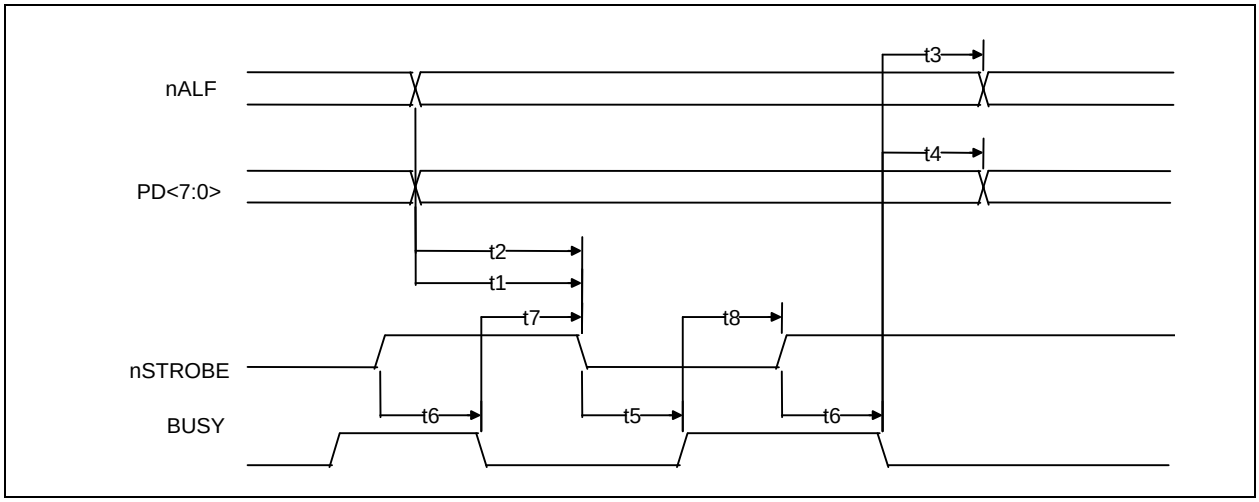

© 2016-2017 Microchip Technology Inc.

Name	Description	MIN	TYP	MAX	Units
t1	nALF Valid to nSTROBE Asserted	0		60	ns
t2	PDATA Valid to nSTROBE Asserted	0		60	ns
t3	BUSY Deasserted to nALF Changed (Notes 1,2)	80		180	ns
t4	BUSY Deasserted to PDATA Changed (Notes 1,2)	80		180	ns
t5	nSTROBE Asserted to Busy Asserted	0			ns
t6	nSTROBE Deasserted to Busy Deasserted	0			ns
t7	BUSY Deasserted to nSTROBE Asserted (Notes 1,2)	80		200	ns
t8	BUSY Asserted to nSTROBE Deasserted (Note 2)	80		180	ns

Note 1: Maximum value only applies if there is data in the FIFO waiting to be written out.

2: BUSY is not considered asserted or deasserted until it is stable for a minimum of 75 to 130 ns.

FIGURE 27-18: ECP PARALLEL PORT REVERSE TIMING

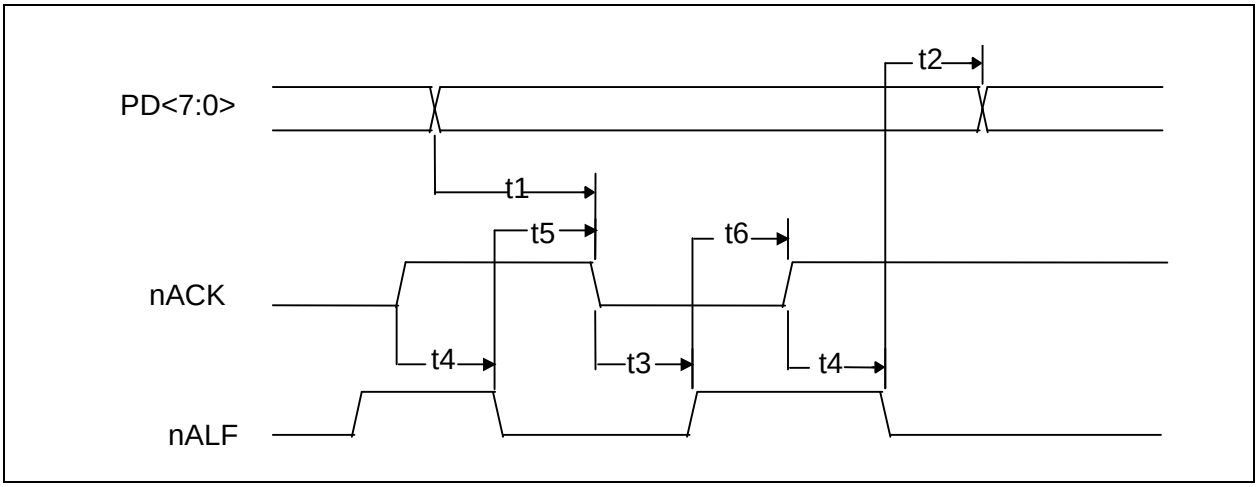

Name	Description	MIN	TYP	MAX	Units
t1	PDATA Valid to nACK Asserted	0			ns
t2	nALF Deasserted to PDATA Changed	0			ns
t3	nACK Asserted to nALF Deasserted (Notes 1,2)	80		200	ns
t4	nACK Deasserted to nALF Asserted (Note 2)	80		200	ns
t5	nALF Asserted to nACK Asserted	0			ns
t6	nALF Deasserted to nACK Deasserted	0			ns

Note 1: Maximum value only applies if there is room in the FIFO and terminal count has not been received. ECP can stall by keeping nALF low.

2: nACK is not considered asserted or deasserted until it is stable for a minimum of 75 to 130 ns.

27.5 IR Timing

FIGURE 27-19: IRDA RECEIVE TIMING

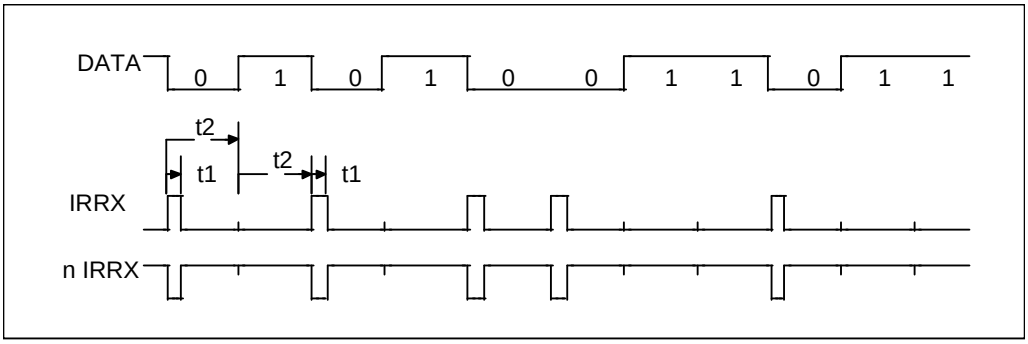

	Parameter	min	typ	max	units
t1	Pulse Width at 115kbaud	1.4	1.6	2.71	µs
t1	Pulse Width at 57.6kbaud	1.4	3.22	3.69	µs
t1	Pulse Width at 38.4kbaud	1.4	4.8	5.53	µs
t1	Pulse Width at 19.2kbaud	1.4	9.7	11.07	µs
t1	Pulse Width at 9.6kbaud	1.4	19.5	22.13	µs
t1	Pulse Width at 4.8kbaud	1.4	39	44.27	µs
t1	Pulse Width at 2.4kbaud	1.4	78	88.55	µs
t2	Bit Time at 115kbaud		8.68		µs
t2	Bit Time at 57.6kbaud		17.4		µs
t2	Bit Time at 38.4kbaud		26		µs
t2	Bit Time at 19.2kbaud		52		µs
t2	Bit Time at 9.6kbaud		104		µs
t2	Bit Time at 4.8kbaud		208		µs
t2	Bit Time at 2.4kbaud		416		µs

Notes:
1. Receive Pulse Detection Criteria: A received pulse is considered detected if the received pulse is a minimum of 1.41µs.
2. IRRX: L5, CRF1 Bit 0 = 1
   nIRRX: L5, CRF1 Bit 0 = 0 (default)

© 2016-2017 Microchip Technology Inc.

FIGURE 27-20: IRDA TRANSMIT TIMING

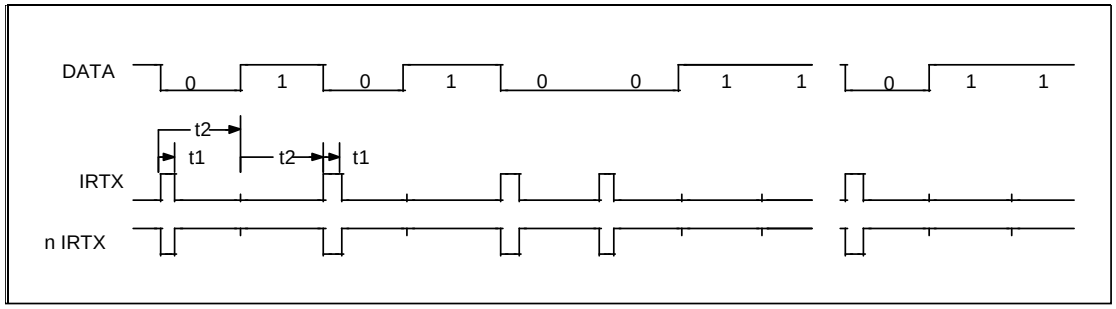

	Parameter	min	typ	max	units
t1	Pulse Width at 115kbaud	1.41	1.6	2.71	µs
t1	Pulse Width at 57.6kbaud	1.41	3.22	3.69	µs
t1	Pulse Width at 38.4kbaud	1.41	4.8	5.53	µs
t1	Pulse Width at 19.2kbaud	1.41	9.7	11.07	µs
t1	Pulse Width at 9.6kbaud	1.41	19.5	22.13	µs
t1	Pulse Width at 4.8kbaud	1.41	39	44.27	µs
t1	Pulse Width at 2.4kbaud	1.41	78	88.55	µs
t2	Bit Time at 115kbaud		8.68		µs
t2	Bit Time at 57.6kbaud		17.4		µs
t2	Bit Time at 38.4kbaud		26		µs
t2	Bit Time at 19.2kbaud		52		µs
t2	Bit Time at 9.6kbaud		104		µs
t2	Bit Time at 4.8kbaud		208		µs
t2	Bit Time at 2.4kbaud		416		µs

Notes:

1. IrDA @ 115k is HPSIR compatible. IrDA @ 2400 will allow compatibility with HP95LX and 48SX.
2. IRTX: L5, CRF1 Bit 1 = 1 (default)
   nIRTX: L5, CRF1 Bit 1 = 0

FIGURE 27-21: AMPLITUDE SHIFT-KEYED IR RECEIVE TIMING

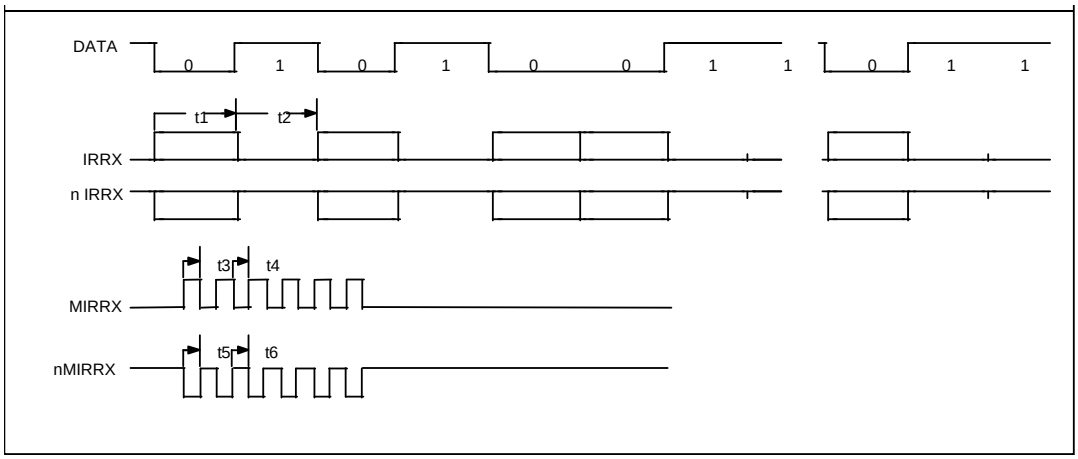

	Parameter	min	typ	max	units
t1	Modulated Output Bit Time				µs
t2	Off Bit Time				µs
t3	Modulated Output "On"	0.8	1	1.2	µs
t4	Modulated Output "Off"	0.8	1	1.2	µs
t5	Modulated Output "On"	0.8	1	1.2	µs
t6	Modulated Output "Off"	0.8	1	1.2	µs

Notes:

1. IRRX: L5, CRF1 Bit 0 = 1
   nIRRX: L5, CRF1 Bit 0 = 0 (default)
   MIRRX, nMIRRX are the modulated outputs

© 2016-2017 Microchip Technology Inc.

FIGURE 27-22: AMPLITUDE SHIFT-KEYED IR TRANSMIT TIMING

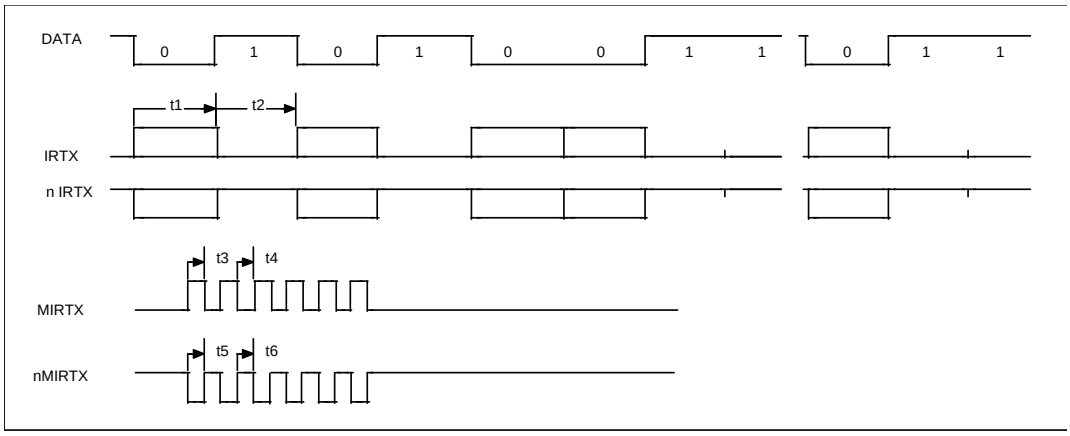

	Parameter	min	typ	max	units
t1	Modulated Output Bit Time				µ s
t2	Off Bit Time				µ s
t3	Modulated Output "On"	0.8	1	1.2	µ s
t4	Modulated Output "Off"	0.8	1	1.2	µ s
t5	Modulated Output "On"	0.8	1	1.2	µ s
t6	Modulated Output "Off"	0.8	1	1.2	µ s

Notes:
1. IRTX: L5, CRF1 Bit 1 = 1 (default)
   nIRTX: L5, CRF1 Bit 1 = 0
   MIRTX, nMIRTX are the modulated outputs

27.6 Serial IRQ Timing

FIGURE 27-23: SETUP AND HOLD TIME

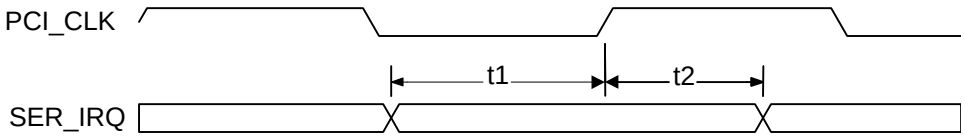

Name	Description	MIN	TYP	MAX	Units
t1	SER_IRQ Setup Time to PCI_CLK Rising	7			nsec
t2	SER_IRQ Hold Time to PCI_CLK Rising	0			nsec

27.7 UART Interface Timing

FIGURE 27-24: SERIAL PORT DATA

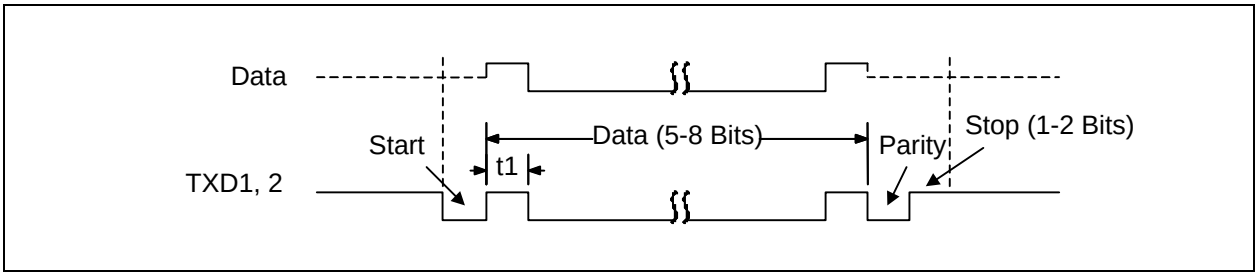

Name	Description	MIN	TYP	MAX	Units
t1	Serial Port Data Bit Time		t_{BR}[1]		nsec
t_{BR} is 1/Baud Rate. The Baud Rate is programmed through the divisor latch registers. Baud Rates have percentage errors indicated in the “Baud Rate” table in the “Serial Port” section.					

27.8 Keyboard/Mouse Interface Timing

FIGURE 27-25: KEYBOARD/MOUSE RECEIVE/SEND DATA TIMING

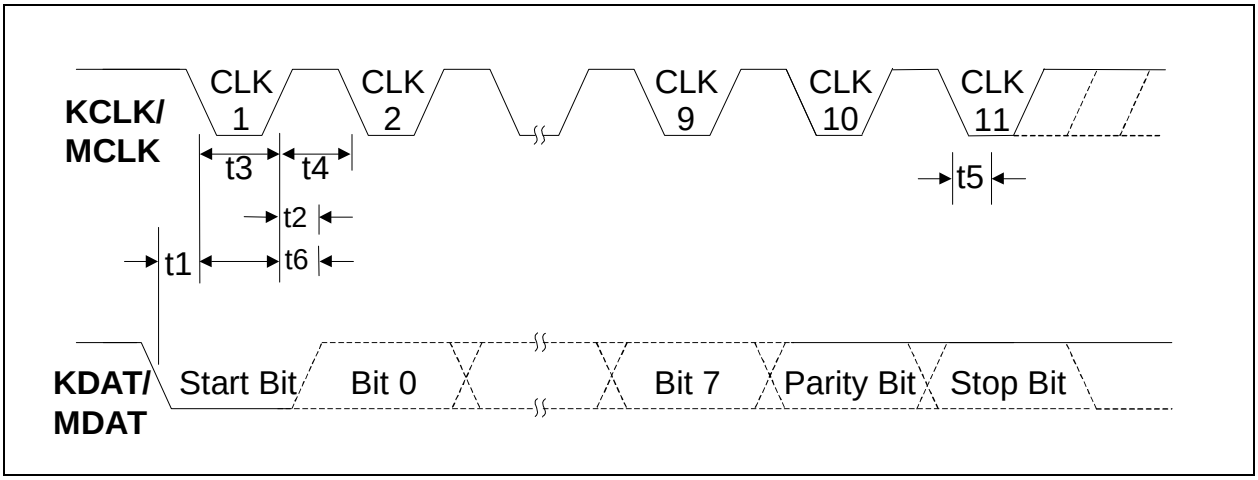

Name	Description	MIN	TYP	MAX	Units
t1	Time from DATA transition to falling edge of CLOCK (Receive)	5		25	µsec
t2	Time from rising edge of CLOCK to DATA transition (Receive)	5		T4-5	µsec
t3	Duration of CLOCK inactive (Receive/Send)	30		50	µsec
t4	Duration of CLOCK active (Receive/Send)	30		50	µsec
t5	Time to keyboard inhibit after clock 11 to ensure the keyboard does not start another transmission (Receive)	>0		50	µsec
t6	Time from inactive to active CLOCK transition, used to time when the auxiliary device samples DATA (Send)	5		25	µsec

© 2016-2017 Microchip Technology Inc.

27.9 Resume Reset Signal Generation

nRSMRST signal is the reset output for the ICH resume well. This signal is used as a power on reset signal for the ICH.

SCH322x detects when VTR voltage raises above VTRIP, provides a delay before generating the rising edge of nRSMRST. See definition of VTRIP on page 275.

This delay, tRESET_DELAY, (t1 on page 275) is nominally 350ms, starts when VTR voltage rises above the VTRIP trip point. If the VTR voltage falls below VTRIP the during tRESET_DELAY then the following glitch protection behavior is implemented:. When the VTR voltage rises above VTRIP, nRSMRST will remain asserted the full tRESET_DELAY after which nRSMRST is deasserted.

On the falling edge there is minimal delay, tRESET_FALL.

Timing and voltage parameters are shown in Figure 27-26 and Table 27-1.

FIGURE 27-26: RESUME RESET SEQUENCE

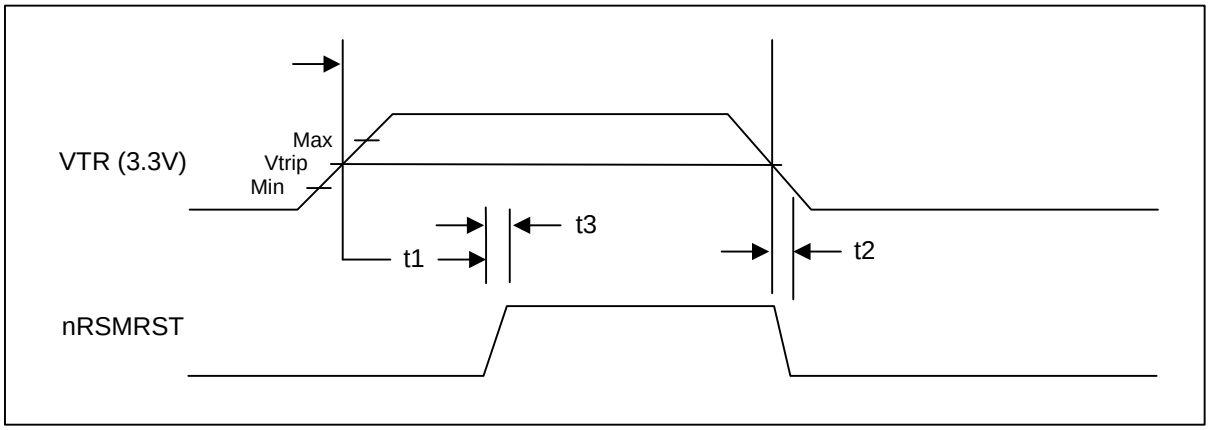

TABLE 27-1: RESUME RESET TIMING

Name	Description	MIN	TYP	MAX	Units	Notes
t1	tRESET_DELAY: VTR active to nRSMRST inactive	140	350	560	msec	
t2	tRESET_FALL: VTR inactive to nRSMRST active (Glitch width allowance)			100	nsec	
t3	tRESET_RISE			100	nsec	
V_{TRIP}	VTR low trip voltage	2.7	2.8	2.9	V	

APPLICATION NOTE: The 5 Volt Standby power supply must power up before or simultaneous with VTR, and must power down simultaneous with or after VTR (from ICH2 data sheet.) SCH322x does not have a 5 Volt Standby power supply input and does not respond to incorrect 5 Volt Standby power - VTR sequencing.

27.10 PWRGD_OUT Signal Generation

FIGURE 27-27: PWRGD_OUT TIMING VS. VOLTAGE 3.3V OR 5V DROP

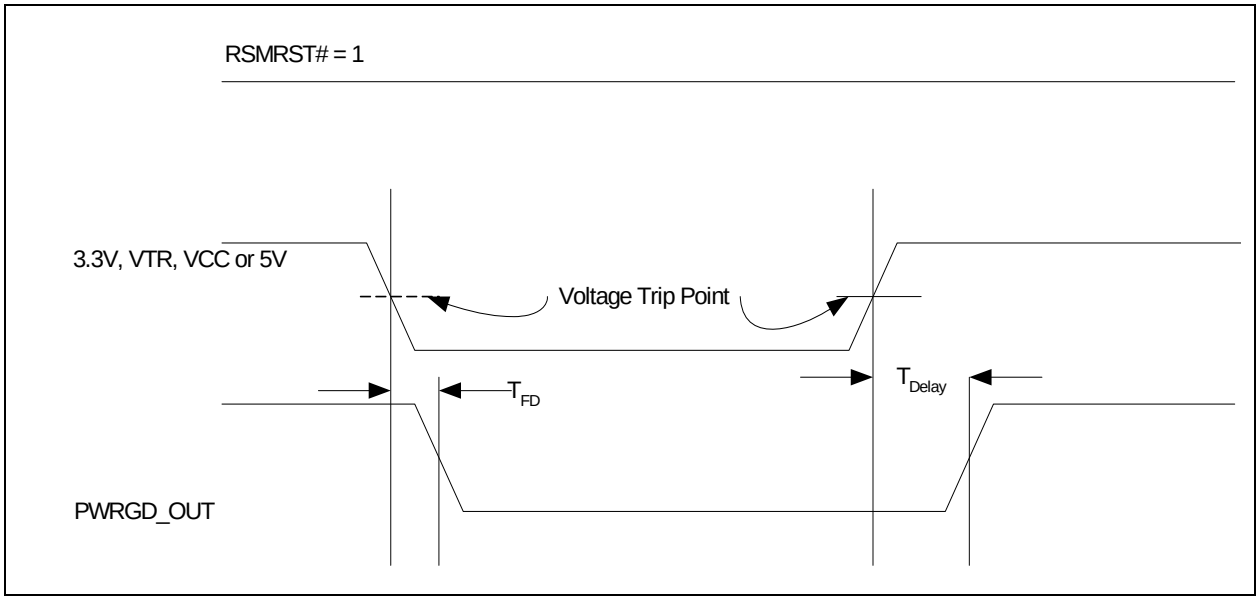

Symbol	Time			Description
	MIN	TYP	MAX	
T_{Delay}	188ms	200ms	212ms	The delay time is from the rising voltage trip voltage to the rising edge of PWRGD_OUT. This delay is selected via a strapping option. Default value is 200ms.
	470ms	500ms	530ms	
T_{FD}	3ηs		20ηs	

For 3.3V and 5V trip points refer to Table 26-3, “Reset Generators,” on page 259.

© 2016-2017 Microchip Technology Inc.

FIGURE 27-28: PWG_OUT VS. PS_ON# SIGNAL NEGATION

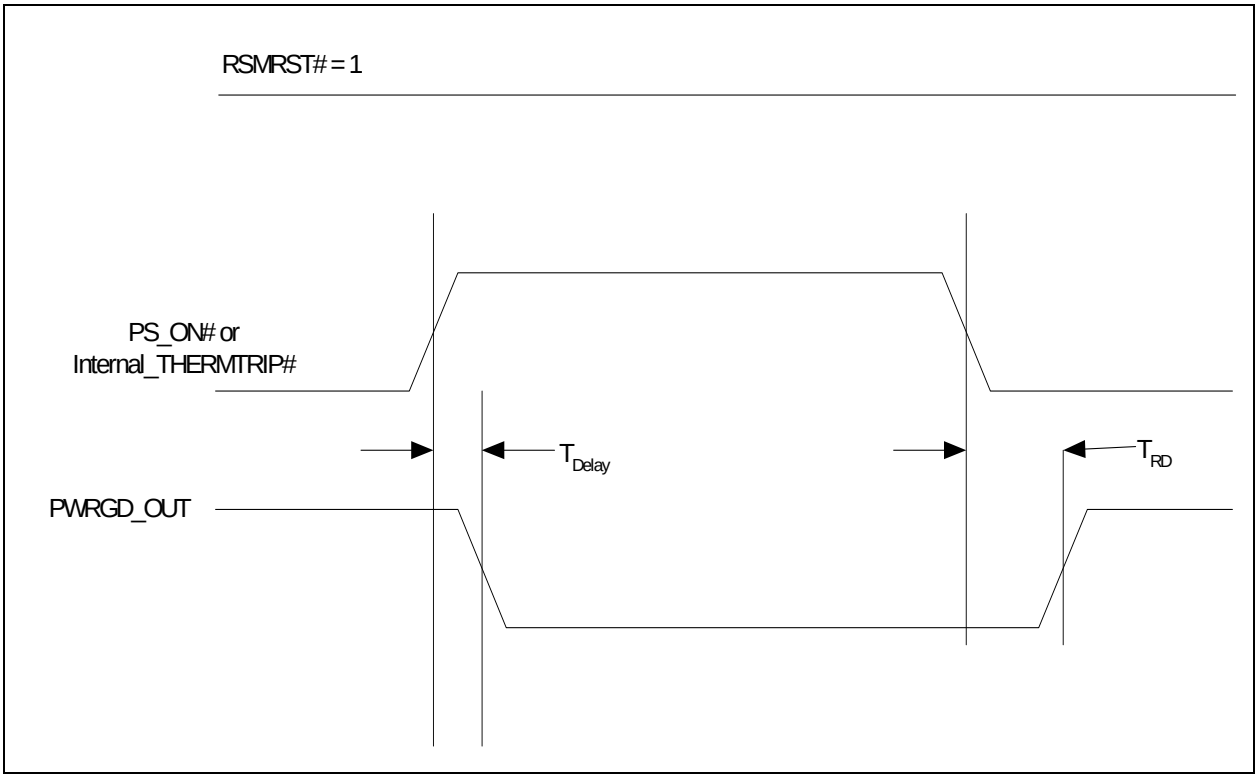

Symbol	Time			Description
	MIN	TYP	MAX	
T_{Delay}	188ms	200ms	212ms	The delay time is from the falling edge of PS_ON# to the rising edge of PWRGD_OUT. This delay is selected via a strapping option. Default value is 200ms.
	470ms	500ms	530ms	
T_{FD}	15ηs		30ηs	

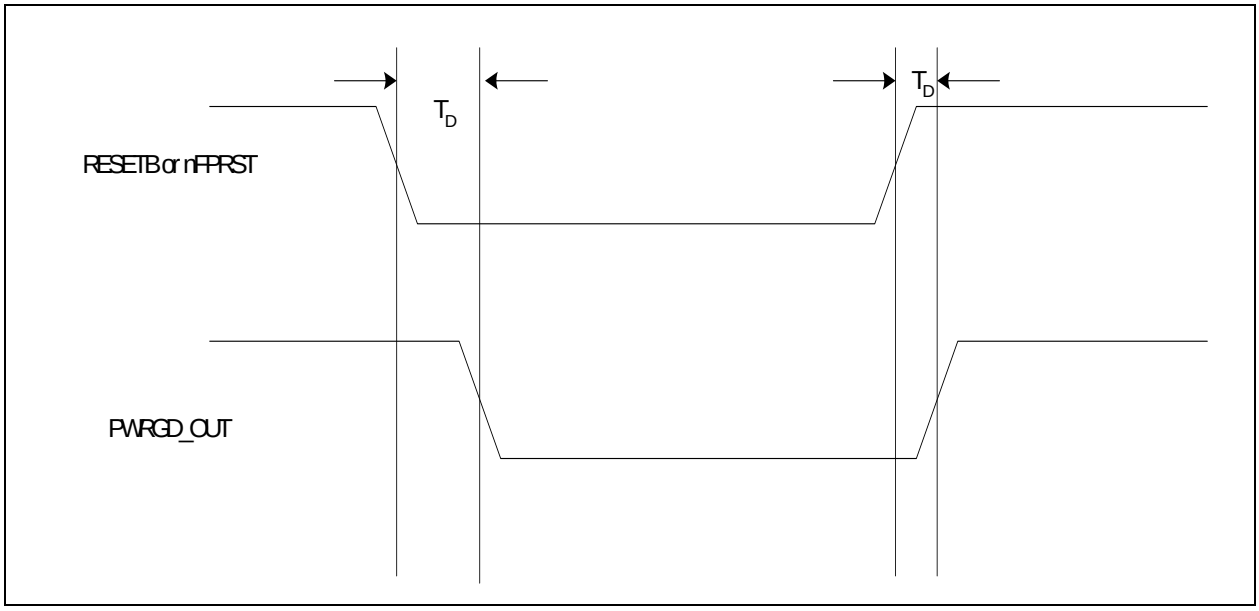

Symbol	Time			Description
	MIN	TYP	MAX	
T_D	0	1.6ms	2.0ms	Debounce Delay

© 2016-2017 Microchip Technology Inc.

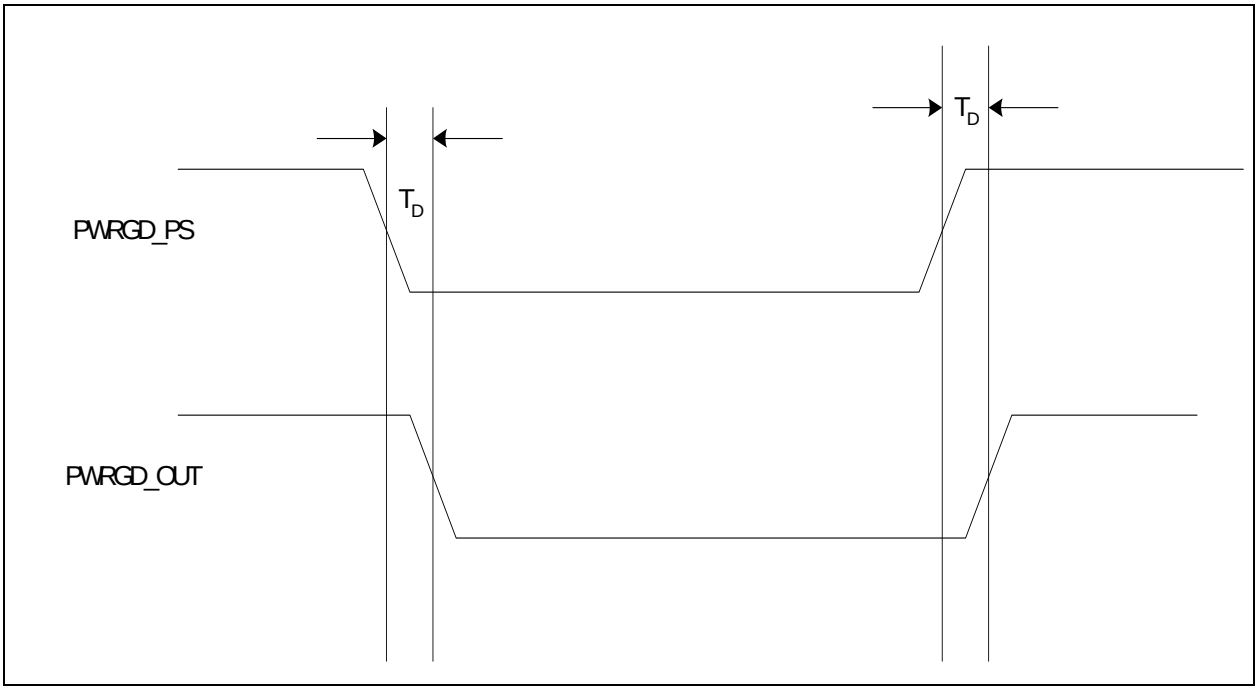

Symbol	Time			Description
	MIN	TYP	MAX	
T_D	1ηs	10ηs	20ηs	Gate Delay

27.11 nLEDx Timing

FIGURE 27-29: NLEDX TIMING

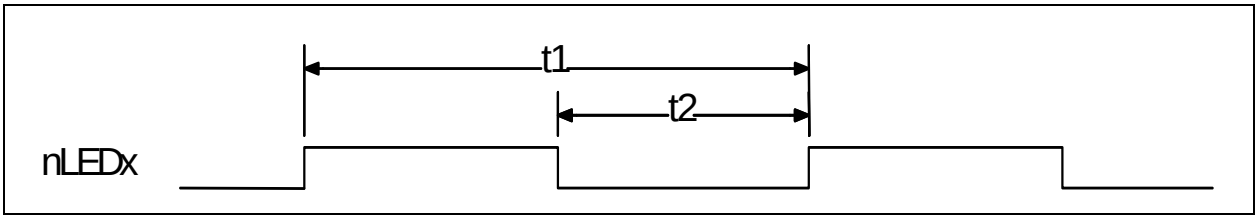

Name	Description	MIN	TYP	MAX	Units
t1	Period		1 or 2[2]	5.88[1]	sec
t2	Blink ON Time	0	0.5[2]	1.52[1]	sec

1. These Max values are due to internal Ring Oscillator. If 1Hz blink rate is selected for LED1 pin, the range will vary from 0.33Hz to 1.0Hz. If 0.5Hz blink rate is selected for LED1 pin, the range will vary from 0.17Hz to 0.5Hz.
2. The blink rate is programmed through Bits[1:0] in LEDx register. When Bits[1:0]=00, LED is OFF. Bits[1:0]=01 indicates LED blink at 1Hz rate with a 50% duty cycle (0.5 sec ON, 0.5 sec OFF). Bits[1:0]=10 indicates LED blink at ½ Hz rate with a 25% duty cycle (0.5 sec ON, 1.5 sec OFF). When Bits[1:0]=11, LED is ON.

27.12 PWM Outputs

The following section shows the timing for the PWM[1:3] outputs.

FIGURE 27-30: PWMX OUTPUT TIMING

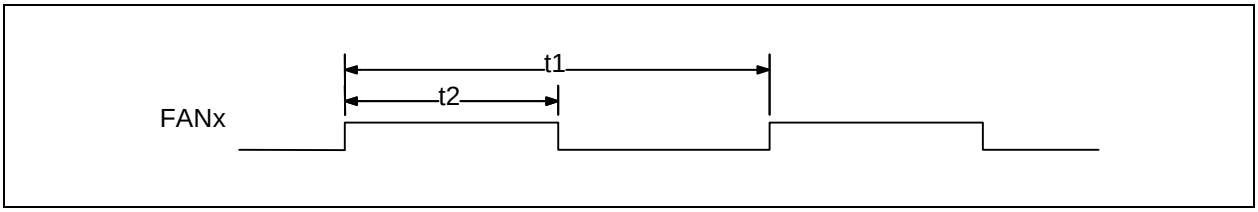

TABLE 27-2: TIMING FOR PWM[1:3] OUTPUTS

Name	Description	MIN	TYP	MAX	Units
t1	PWM Period (Note 1) - low frequency option - high frequency option	 11.4 10.7		 90.9 42.7	 msec usec
t2	PWM High Time (Note 2)	0		99.6	%

Note 1: This value is programmable by the PWM frequency bits located in the FRFx registers.

2: The PWM High Time is based on a percentage of the total PWM period (min=0/256*T_{PWM}, max =255/256*T_{PWM}). During Spin-up the PWM High Time can reach a 100% or Full On. (T_{PWM} = t1).

© 2016-2017 Microchip Technology Inc.

28.0 PACKAGE OUTLINES

FIGURE 28-1: SCH3227 144-BALL WFBGA PACKAGE OUTLINE; 9 X 9 MM BODY, 0.65MM PITCH

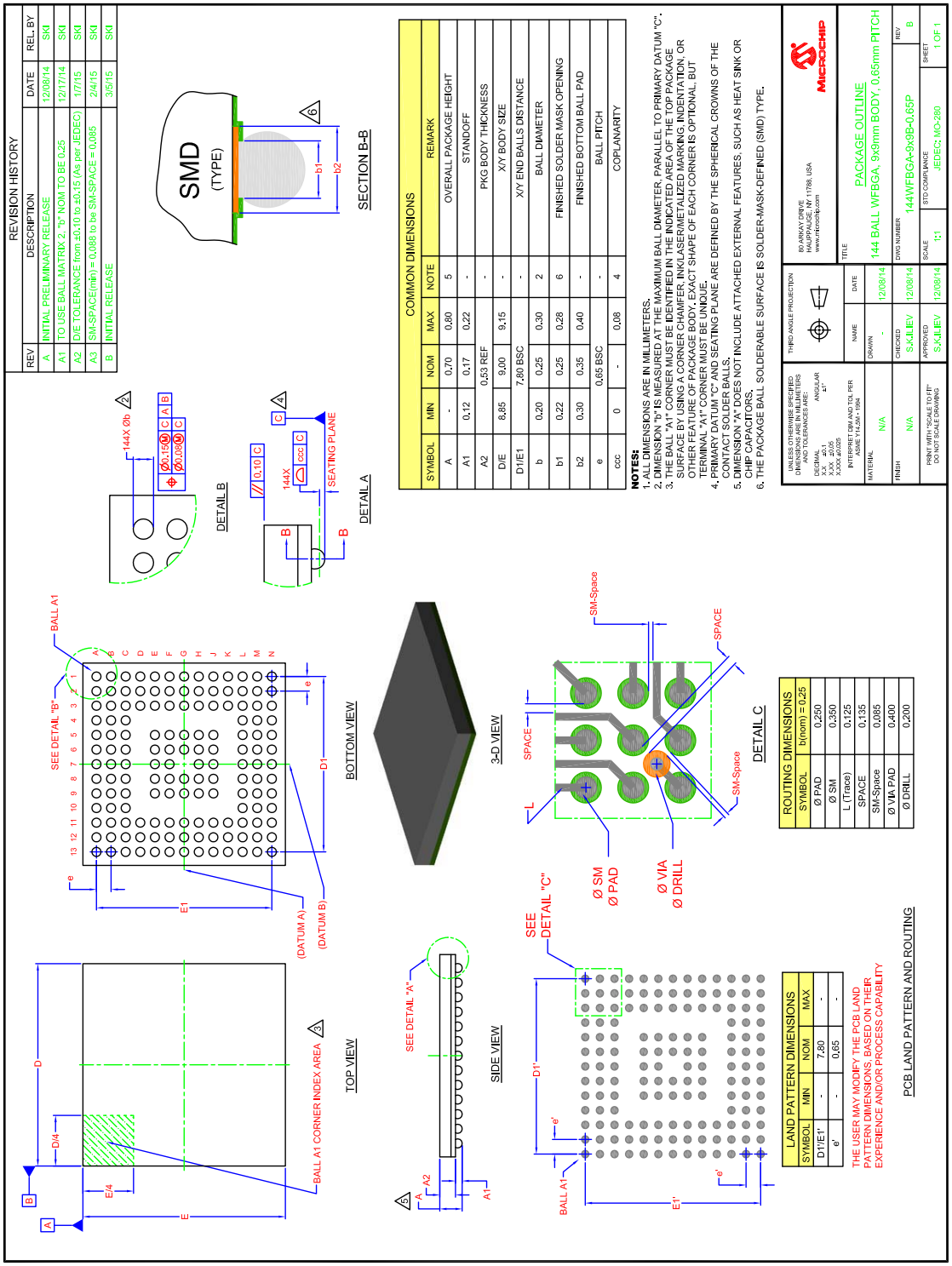

FIGURE 28-2: SCH3226, SCH3224 100-BALL WFBGA PACKAGE OUTLINE; 8 X 8 MM BODY, 0.65MM PITCH

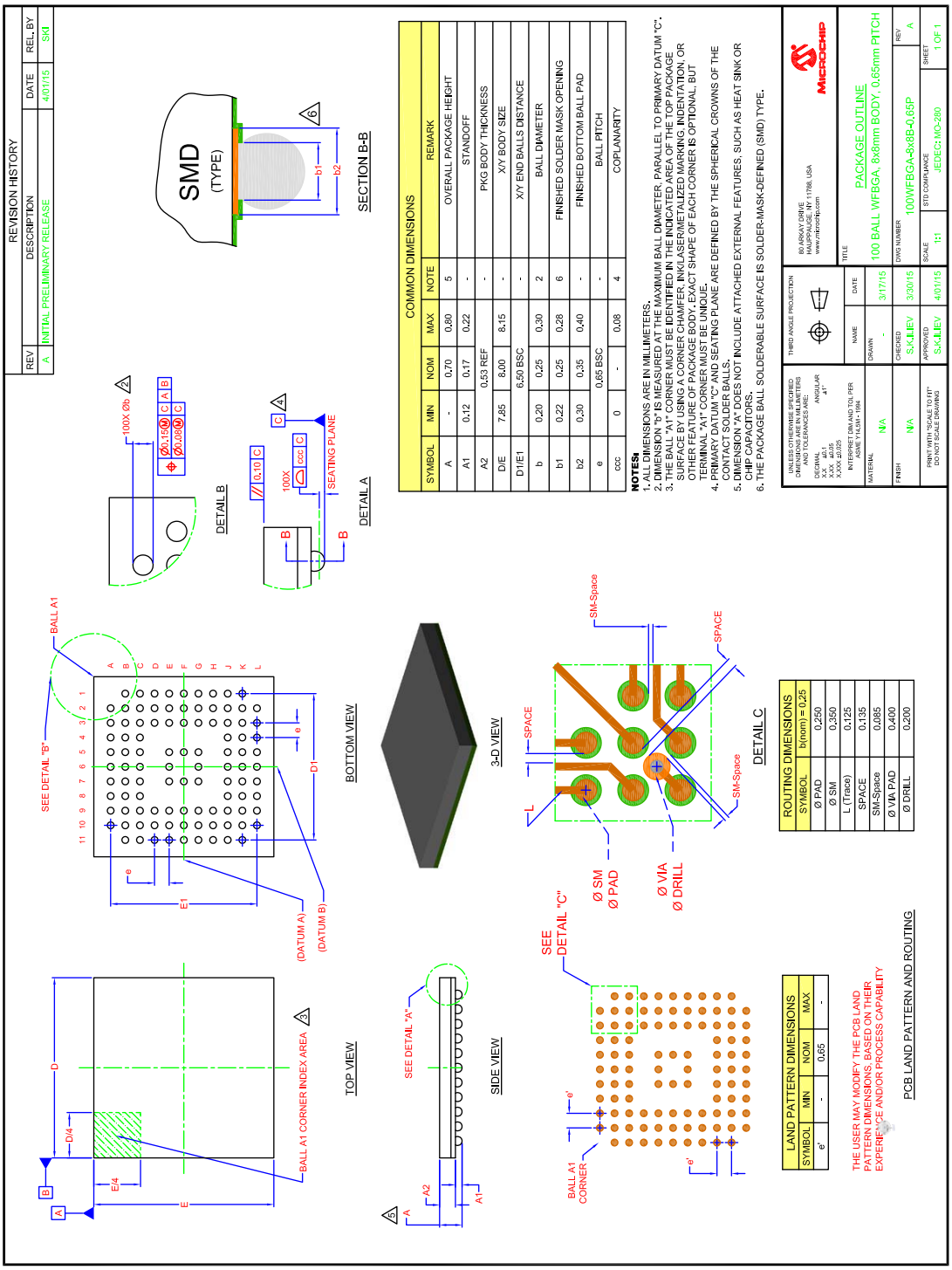

© 2016-2017 Microchip Technology Inc.

FIGURE 28-3: SCH3222 84-BALL WFBGA PACKAGE OUTLINE; 7 X 7 MM BODY, 0.65MM PITCH

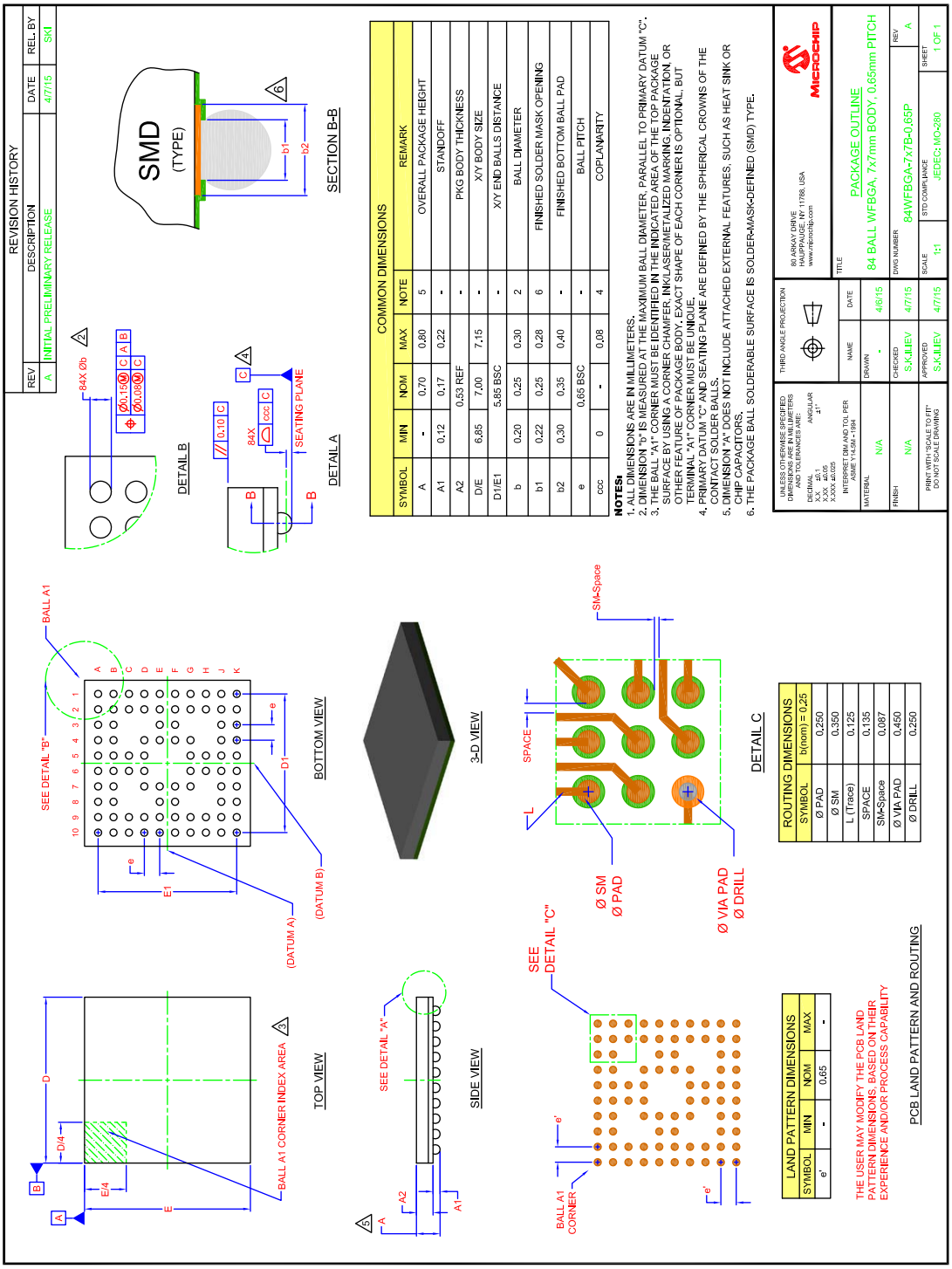

APPENDIX A: ADC VOLTAGE CONVERSION

TABLE A-1: ANALOG-TO-DIGITAL VOLTAGE CONVERSIONS FOR HARDWARE MONITORING BLOCK

Input Voltage					A/D Output	
+12 V	**+5 V** Note 28-1	**+3.3 V** Note 28-2	**+2.5V**	**1.5V**	**Decimal**	**Binary**
<0.062	<0.026	<0.0172	<0.013	<0.008	0	0000 0000
0.062–0.125	0.026–0.052	0.017–0.034	0.013 - 0.031	0.008 - 0.015	1	0000 0001
0.125–0.188	0.052–0.078	0.034–0.052	0.031 - 0.039	0.015 - 0.024	2	0000 0010
0.188–0.250	0.078–0.104	0.052–0.069	0.039 - 0.052	0.024 - 0.031	3	0000 0011
0.250–0.313	0.104–0.130	0.069–0.086	0.052 - 0.065	0.031 - 0.039	4	0000 0100
0.313–0.375	0.130–0.156	0.086–0.103	0.065 - 0.078	0.039 - 0.047	5	0000 0101
0.375–0.438	0.156–0.182	0.103–0.120	0.078 - 0.091	0.047 - 0.055	6	0000 0110
0.438–0.500	0.182–0.208	0.120–0.138	0.091 - 0.104	0.055 - 0.063	7	0000 0111
0.500–0.563	0.208–0.234	0.138–0.155	0.104 - 0.117	0.063 - 0.071	8	0000 1000
⋮	⋮	⋮	⋮	⋮	⋮	⋮
4.000–4.063	1.666–1.692	1.100–1.117	0.833 - 0.846	0.501 - 0.508	64 (1/4 Scale)	0100 0000
⋮	⋮	⋮	⋮	⋮	⋮	⋮
8.000–8.063	3.330–3.560	2.200–2.217	1.665- 1.780	1.001 - 1.009	128 (1/2 Scale)	1000 0000
⋮	⋮	⋮	⋮	⋮	⋮	⋮
12.000–12.063	5.000–5.026	3.300–3.317	2,500 - 2.513	1.502 - 1.509	192 (3/4 Scale)	1100 0000
⋮	⋮	⋮	⋮	⋮	⋮	⋮
15.312–15.375	6.380–6.406	4.210–4.230	3.190 - 3.200	1.916 - 1.925	245	1111 0101
15.375–15.437	6.406–6.432	4.230–4.245	3.200 - 3.216	1.925 - 1.931	246	1111 0110
15.437–15.500	6.432–6.458	4.245–4.263	3.216 - 3.229	1.931 - 1.948	247	1111 0111
15.500–15.563	6.458–6.484	4.263–4.280	3.229 - 3.242	1.948 - 1.947	248	1111 1000
15.625–15.625	6.484–6.510	4.280–4.300	3.242 - 3.255	1.947 - 1.957	249	1111 1001
15.625–15.688	6.510–6.536	4.300–4.314	3.255 - 3.268	1.957 - 1.963	250	1111 1010
15.688–15.750	6.536–6.562	4.314–4.330	3.268 - 3.281	1.963 - 1.970	251	1111 1011
15.750–15.812	6.562–6.588	4.331–4.348	3.281 - 3.294	1.970 - 1.978	252	1111 1100
15.812–15.875	6.588–6.615	4.348–4.366	3.294 - 3.308	1.978 - 1.987	253	1111 1101
15.875–15.938	6.615–6.640	4.366–4.383	3.308 - 3.320	1.987 - 1.994	254	1111 1110
>15.938	>6.640	>4.383	> 3.320	> 1.994	255	1111 1111

Note 28-1 The 5V input is a +5V nominal inputs. 2.5V input is a 2.5V nominal input.

Note 28-2 The VCC, VTR, and Vbat inputs are +3.3V nominal inputs. VCC and VTR are nominal 3.3V power supplies. Vbat is a nominal 3.0V power supply.

© 2016-2017 Microchip Technology Inc.

APPENDIX B: EXAMPLE FAN CIRCUITS

The following figures show examples of circuitry on the board for the PWM outputs, tachometer inputs, and remote diodes. Figure B-1 shows how the part can be used to control four fans by connecting two fans to one PWM output.

Note:

- These examples represent the minimum required components. Some designs may require additional components.
- The SCH3222 device does not support fan control.

FIGURE B-1: FAN DRIVE CIRCUITRY FOR LOW FREQUENCY OPTION (APPLY TO PWM DRIVING TWO FANS)

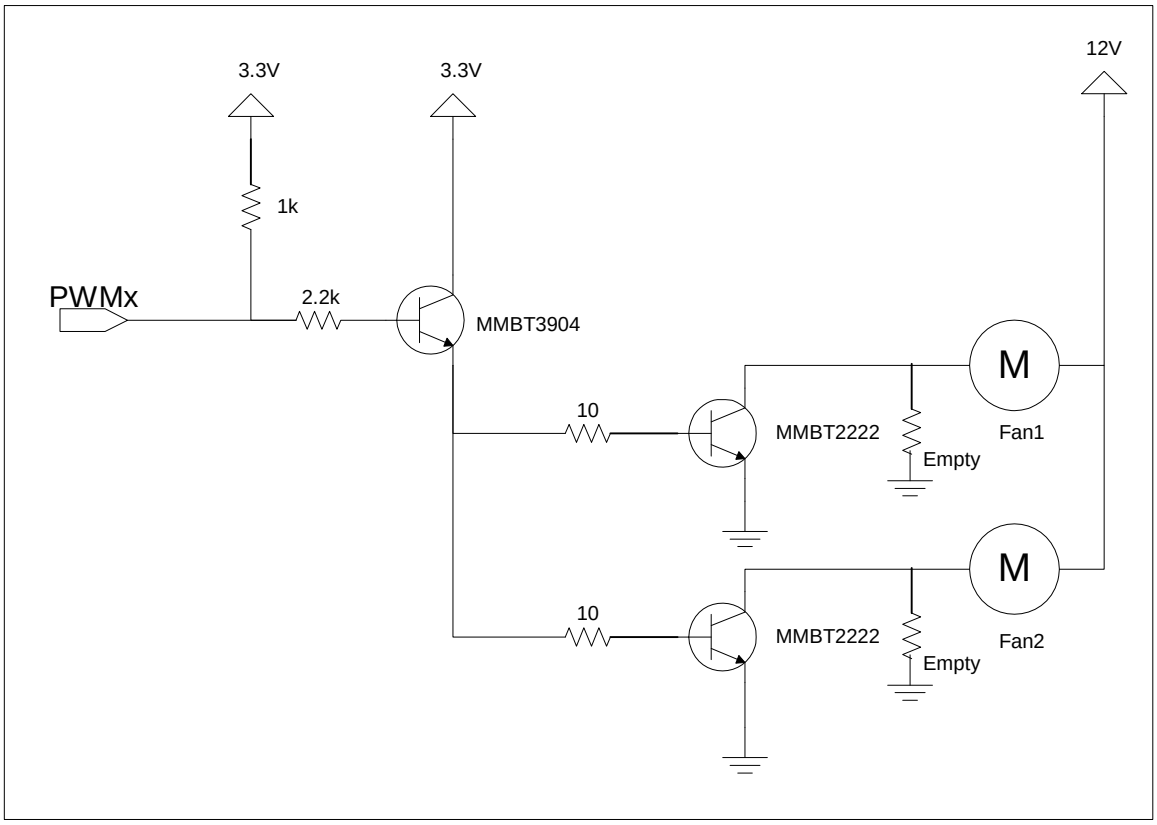

FIGURE B-2: FAN DRIVE CIRCUITRY FOR LOW FREQUENCY OPTION (APPLY TO PWM DRIVING ONE FAN)

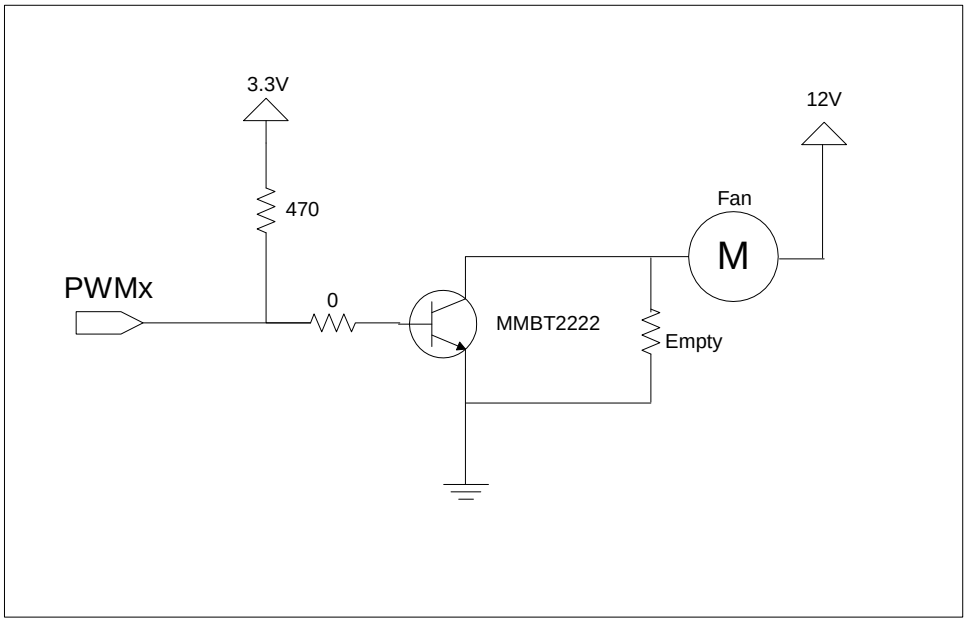

FIGURE B-3: FAN TACHOMETER CIRCUITRY (APPLY TO EACH FAN)

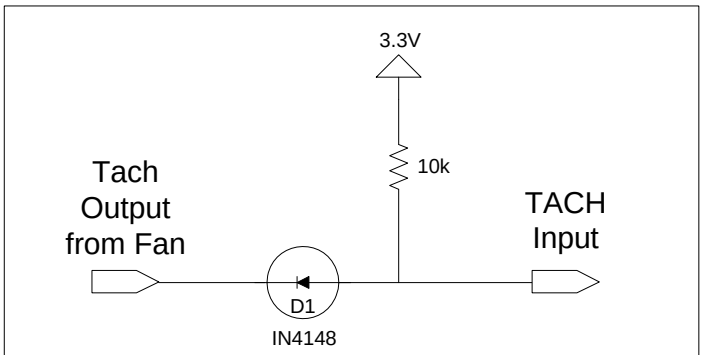

Note: For fans controlled directly by a PWM, it is suggested to implement the optional diode (D1) to protect the tachometer input from large voltage spikes generated by the fan.

© 2016-2017 Microchip Technology Inc.

FIGURE B-4: REMOTE DIODE (APPLY TO REMOTE2 LINES)

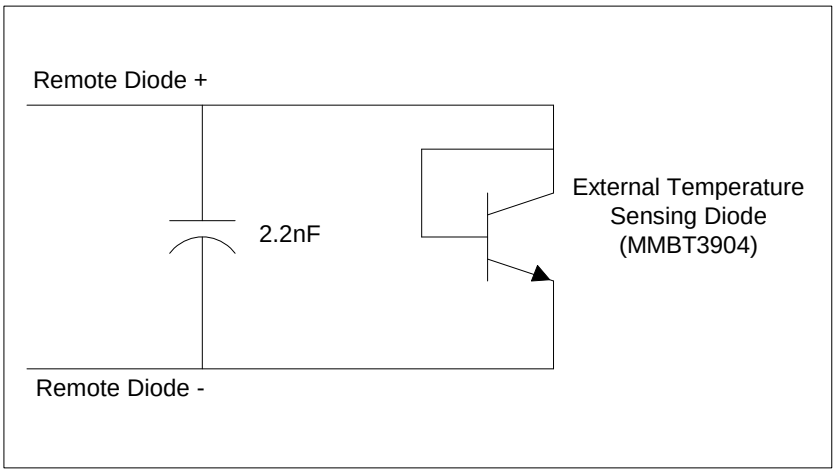

Note 1: 2.2nF cap is optional and should be placed close to the SCH322x f used.

2: The voltage at PWM3 must be at least 2.0V to avoid triggering Address Enable.

3: The Remote Diode + and Remote Diode - tracks should be kept close together, in parallel with grounded guard tracks on each side. Using wide tracks will help to minimize inductance and reduce noise pickup. A 10 mil track minimum width and spacing is recommended. See Figure B-5, "Suggested Minimum Track Width and Spacing".

FIGURE B-5: SUGGESTED MINIMUM TRACK WIDTH AND SPACING

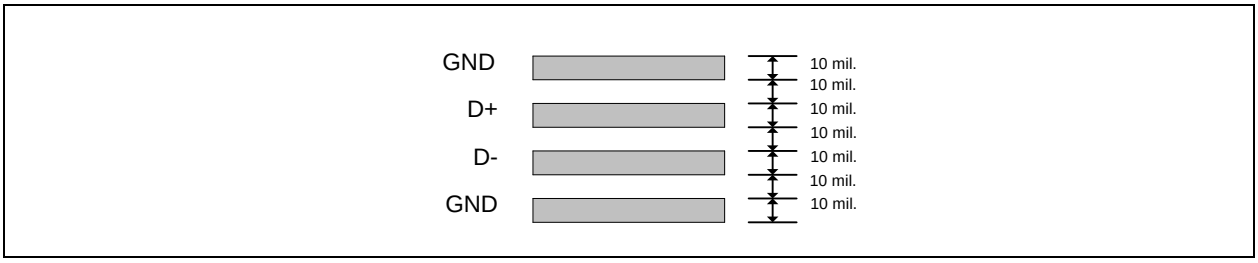

APPENDIX C: TEST MODE

The SCH322x provides board test capability through the implementation of one XNOR chain and one XOR chain. The XNOR chain is dedicated to the Super I/O portion and the Hardware Monitoring Block of the device.

Note:	Pins that are not brought out of the package are tied to a determinate voltage internal to the package, and so will not affect the XNOR output, except that its initial state may differ among family members.

C.1 XNOR-Chain Test Mode Overview

XNOR-Chain test structure allows users to confirm that all pins are in contact with the motherboard during assembly and test operations. See Figure C-1. When the chip is in the XNOR chain test mode, setting the state of any of the input pins to the opposite of its current state will cause the output of the chain to toggle.

The XNOR-Chain test structure must be activated to perform these tests. When the XNOR-Chain is activated, the SCH322x pin functions are disconnected from the device pins, which all become input pins except for one output pin at the end of XNOR-Chain.

The tests that are performed when the XNOR-Chain test structure is activated require the board-level test hardware to control the device pins and observe the results at the XNOR-Chain output pin.

FIGURE C-1: XNOR-CHAIN TEST STRUCTURE

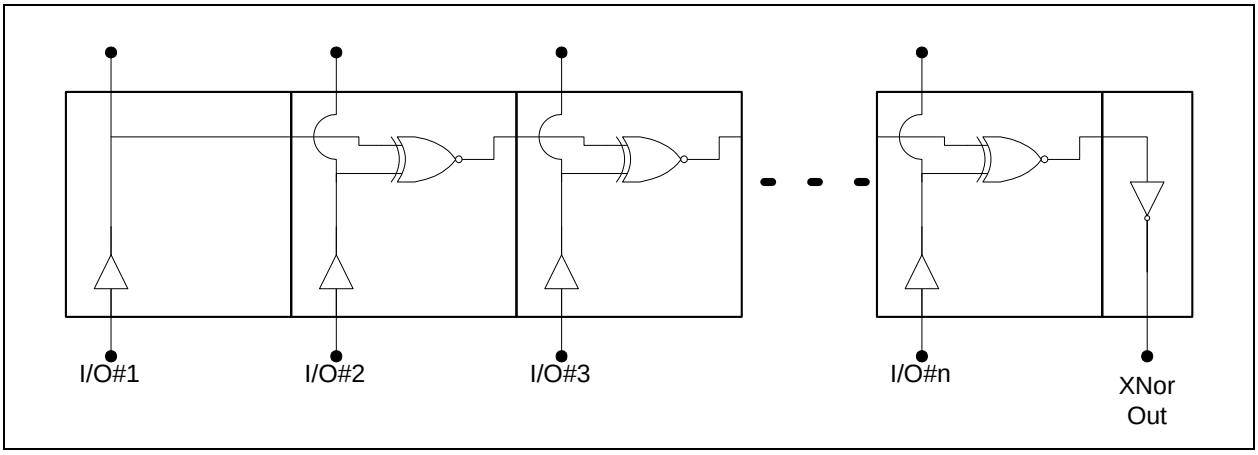

C.1.1 Board Test Mode

Board test mode can be entered as follows:

On the rising (deasserting) edge of PCI_RESET#, drive LFRAME# low and drive LAD[0] low.

Exit board test mode as follows:

On the rising (deasserting) edge of PCI_RESET#, drive either LFRAME# or LAD[0] high.

The PCI_RESET# pin is not included in the XNOR-Chain. The XNOR-Chain output pin# is TXD1. See the following sub-sections for more details.

Pin List of XNOR Chain

All pins on the chip are inputs to the first XNOR chain, with the exception of the following:

- All power supply pins - HVTR, HVSS, VCC, VTR, and Vbat
- VSS and AVSS
- All analog inputs: Remote2-, Remote2+, Remote1-, Remote1+, VCCP_IN, +12V_IN, +5V_IN, +2.5V_IN
- TXD1 This is the chain output.
- PCI_RESET#.

© 2016-2017 Microchip Technology Inc.

To put the chip in the first XNOR chain test mode, tie LAD0 and LFRAME# low. Then toggle PCI_RESET# from a low to a high state. Once the chip is put into XNOR chain test mode, LAD0 and LFRAME# become part of the chain.

To exit the SIO XNOR chain test mode tie LAD0 or LFRAME# high. Then toggle PCI_RESET# from a low to a high state. A VCC POR will also cause the XNOR chain test mode to be exited. To verify the test mode has been exited, observe the output at TXD1. Toggling any of the input pins in the chain should not cause its state to change.

Setup of Super I/O XNOR Chain

Warning: Ensure power supply is off during setup.

- Connect the VSS, the AVSS, HVSS pins to ground.
- Connect the VCC, the VTR, and HVTR pins to 3.3V.
- Connect an oscilloscope or voltmeter to TXD1.
- All other pins should be tied to ground.

Testing

1. Turn power on.
2. With LAD0 and LFRAME# low, bring PCI_RESET# high. The chip is now in XNOR chain test mode. At this point, all inputs to the first XNOR chain are low. The output, on TXD1 should also be low. Refer to INITIAL CONFIG on Table C-1.
3. Bring the first pin high. The output on TXD1 should go toggle. Refer to STEP ONE in Table C-1.
4. In descending pin order, bring each input high. The output should switch states each time an input is toggled. Continue until all inputs are high. The output on TXD1 should now be low. Refer to END CONFIG in Table C-1.
5. The current state of the chip is now represented by INITIAL CONFIG in Table C-2.
6. Each input should now be brought low, starting at pin one and continuing in ascending order. Continue until all inputs are low. The output on TXD1 should now be low. Refer to Table C-2.
7. To exit test mode, tie LAD0 or LFRAME# high, and toggle PCI_RESET# from a low to a high state.

TABLE C-1: TOGGLING INPUTS IN DESCENDING ORDER

	Last Pin (N)	Pin N-1	Pin N-2	Pin N-3	Pin N-4	Pin ...	First Pin (1 of N)	Output Pin
INITIAL CONFIG	L	L	L	L	L	L	L	H or L
STEP 1	H	L	L	L	L	L	L	Toggles
STEP 2	H	H	L	L	L	L	L	Toggles
STEP 3	H	H	H	L	L	L	L	Toggles
STEP 4	H	H	H	H	L	L	L	Toggles
STEP 5	H	H	H	H	H	L	L	Toggles
...	...	...	...	...	...	...	...	...
STEP N	H	H	H	H	H	H	L	Toggles
END CONFIG	H	H	H	H	H	H	H	Toggles

TABLE C-2: TOGGLING INPUTS IN ASCENDING ORDER

	First Pin (1)	Next Pin (2)	Pin (3)	Pin (4)	PIN (5)	Pin ...	Last Pin (N)	Output Pin
INITIAL CONFIG	H	H	H	H	H	H	H	H or L
STEP 1	L	H	H	H	H	H	H	Toggles
STEP 2	L	L	H	H	H	H	H	Toggles
STEP 3	L	L	L	H	H	H	H	Toggles
STEP 4	L	L	L	L	H	H	H	Toggles
STEP 5	L	L	L	L	L	H	H	Toggles
	…	…	…	…	…	…	…	…
STEP N	L	L	L	L	L	L	H	Toggles
END CONFIG	L	L	L	L	L	L	L	Toggles

© 2016-2017 Microchip Technology Inc.

APPENDIX D: DATA SHEET REVISION HISTORY

TABLE D-1: SCH3227/SCH3226/SCH3224/SCH3222 REVISION HISTORY

Revision	Section/Figure/Entry	Correction
DS00002121B (03-20-17)	Figure 2-2, "SCH3226 Pin Diagram" and Figure 2-3, "SCH3224 Pin Diagram"	Updated diagrams
	Table 2-2, "SCH3226 Summaries By Strap Option", Table 2-3, "SCH3224 Summary" and Table 2-4, "SCH3222 Summary"	Added footnote to pin TEST, indicating that a connection to VSS is necessary.
DS00002121A (03-02-16)	Document Release	

PRODUCT IDENTIFICATION SYSTEM

To order or obtain information, e.g., on pricing or delivery, refer to the factory or the listed sales office.

PART NO.	[X]	-	XX	-	[XX]
Device	Temperature Range		Package		Tape and Reel Option

Device:	SCH3227/SCH3226/SCH3224/SCH3222
Temperature Range:	Blank = 0°C to +70°C (Commercial) I = -40°C to +85°C (Industrial)
Package:	SZ = 144-pin WFBGA (SCH3227) SY = 100-pin WFBGA (SCH3226. SCH3224) SX = 84-pin WFBGA (SCH3222)
Tape and Reel Option:	Blank = Standard packaging (tray) TR = Tape and Reel (Note 1)

Examples:

a) SCH3227-SZ
Commercial temperature, 144-pin WFBGA, Tray

b) SCH3227I-SZ-TR
Industrial temperature, 144-pin WFBGA, Tape & Reel

Note 1: Tape and Reel identifier only appears in the catalog part number description. This identifier is used for ordering purposes and is not printed on the device package. Check with your Microchip Sales Office for package availability with the Tape and Reel option.

© 2016-2017 Microchip Technology Inc.

THE MICROCHIP WEB SITE

Microchip provides online support via our WWW site at www.microchip.com. This web site is used as a means to make files and information easily available to customers. Accessible by using your favorite Internet browser, the web site contains the following information:

- **Product Support** – Data sheets and errata, application notes and sample programs, design resources, user's guides and hardware support documents, latest software releases and archived software
- **General Technical Support** – Frequently Asked Questions (FAQ), technical support requests, online discussion groups, Microchip consultant program member listing
- **Business of Microchip** – Product selector and ordering guides, latest Microchip press releases, listing of seminars and events, listings of Microchip sales offices, distributors and factory representatives

CUSTOMER CHANGE NOTIFICATION SERVICE

Microchip's customer notification service helps keep customers current on Microchip products. Subscribers will receive e-mail notification whenever there are changes, updates, revisions or errata related to a specified product family or development tool of interest.

To register, access the Microchip web site at www.microchip.com. Under "Support", click on "Customer Change Notification" and follow the registration instructions.

CUSTOMER SUPPORT

Users of Microchip products can receive assistance through several channels:

- Distributor or Representative
- Local Sales Office
- Field Application Engineer (FAE)
- Technical Support

Customers should contact their distributor, representative or field application engineer (FAE) for support. Local sales offices are also available to help customers. A listing of sales offices and locations is included in the back of this document.

Technical support is available through the web site at: http://www.microchip.com/support

Note the following details of the code protection feature on Microchip devices:

- Microchip products meet the specification contained in their particular Microchip Data Sheet.
- Microchip believes that its family of products is one of the most secure families of its kind on the market today, when used in the intended manner and under normal conditions.
- There are dishonest and possibly illegal methods used to breach the code protection feature. All of these methods, to our knowledge, require using the Microchip products in a manner outside the operating specifications contained in Microchip's Data Sheets. Most likely, the person doing so is engaged in theft of intellectual property.
- Microchip is willing to work with the customer who is concerned about the integrity of their code.
- Neither Microchip nor any other semiconductor manufacturer can guarantee the security of their code. Code protection does not mean that we are guaranteeing the product as "unbreakable."

Code protection is constantly evolving. We at Microchip are committed to continuously improving the code protection features of our products. Attempts to break Microchip's code protection feature may be a violation of the Digital Millennium Copyright Act. If such acts allow unauthorized access to your software or other copyrighted work, you may have a right to sue for relief under that Act.

Information contained in this publication regarding device applications and the like is provided only for your convenience and may be superseded by updates. It is your responsibility to ensure that your application meets with your specifications. MICROCHIP MAKES NO REPRESENTATIONS OR WARRANTIES OF ANY KIND WHETHER EXPRESS OR IMPLIED, WRITTEN OR ORAL, STATUTORY OR OTHERWISE, RELATED TO THE INFORMATION, INCLUDING BUT NOT LIMITED TO ITS CONDITION, QUALITY, PERFORMANCE, MERCHANTABILITY OR FITNESS FOR PURPOSE**.** Microchip disclaims all liability arising from this information and its use. Use of Microchip devices in life support and/or safety applications is entirely at the buyer's risk, and the buyer agrees to defend, indemnify and hold harmless Microchip from any and all damages, claims, suits, or expenses resulting from such use. No licenses are conveyed, implicitly or otherwise, under any Microchip intellectual property rights unless otherwise stated.

Trademarks

The Microchip name and logo, the Microchip logo, AnyRate, AVR, AVR logo, AVR Freaks, BeaconThings, BitCloud, CryptoMemory, CryptoRF, dsPIC, FlashFlex, flexPWR, Heldo, JukeBlox, KEELOQ, KEELOQ logo, Kleer, LANCheck, LINK MD, maXStylus, maXTouch, MediaLB, megaAVR, MOST, MOST logo, MPLAB, OptoLyzer, PIC, picoPower, PICSTART, PIC32 logo, Prochip Designer, QTouch, RightTouch, SAM-BA, SpyNIC, SST, SST Logo, SuperFlash, tinyAVR, UNI/O, and XMEGA are registered trademarks of Microchip Technology Incorporated in the U.S.A. and other countries.

ClockWorks, The Embedded Control Solutions Company, EtherSynch, Hyper Speed Control, HyperLight Load, IntelliMOS, mTouch, Precision Edge, and Quiet-Wire are registered trademarks of Microchip Technology Incorporated in the U.S.A.

Adjacent Key Suppression, AKS, Analog-for-the-Digital Age, Any Capacitor, AnyIn, AnyOut, BodyCom, chipKIT, chipKIT logo, CodeGuard, CryptoAuthentication, CryptoCompanion, CryptoController, dsPICDEM, dsPICDEM.net, Dynamic Average Matching, DAM, ECAN, EtherGREEN, In-Circuit Serial Programming, ICSP, Inter-Chip Connectivity, JitterBlocker, KleerNet, KleerNet logo, Mindi, MiWi, motorBench, MPASM, MPF, MPLAB Certified logo, MPLIB, MPLINK, MultiTRAK, NetDetach, Omniscient Code Generation, PICDEM, PICDEM.net, PICkit, PICtail, PureSilicon, QMatrix, RightTouch logo, REAL ICE, Ripple Blocker, SAM-ICE, Serial Quad I/O, SMART-I.S., SQI, SuperSwitcher, SuperSwitcher II, Total Endurance, TSHARC, USBCheck, VariSense, ViewSpan, WiperLock, Wireless DNA, and ZENA are trademarks of Microchip Technology Incorporated in the U.S.A. and other countries.

SQTP is a service mark of Microchip Technology Incorporated in the U.S.A.

Silicon Storage Technology is a registered trademark of Microchip Technology Inc. in other countries.

GestIC is a registered trademark of Microchip Technology Germany II GmbH & Co. KG, a subsidiary of Microchip Technology Inc., in other countries.

All other trademarks mentioned herein are property of their respective companies.

© 2016-2017, Microchip Technology Incorporated, All Rights Reserved.

ISBN: 9781522414872

QUALITY MANAGEMENT SYSTEM
CERTIFIED BY DNV
═ ISO/TS 16949 ═

Microchip received ISO/TS-16949:2009 certification for its worldwide headquarters, design and wafer fabrication facilities in Chandler and Tempe, Arizona; Gresham, Oregon and design centers in California and India. The Company's quality system processes and procedures are for its PIC® MCUs and dsPIC® DSCs, KEELOQ® code hopping devices, Serial EEPROMs, microperipherals, nonvolatile memory and analog products. In addition, Microchip's quality system for the design and manufacture of development systems is ISO 9001:2000 certified.

© 2016-2017 Microchip Technology Inc.

Worldwide Sales and Service

AMERICAS

Corporate Office
2355 West Chandler Blvd.
Chandler, AZ 85224-6199
Tel: 480-792-7200
Fax: 480-792-7277
Technical Support:
http://www.microchip.com/support
Web Address:
www.microchip.com

Atlanta
Duluth, GA
Tel: 678-957-9614
Fax: 678-957-1455

Austin, TX
Tel: 512-257-3370

Boston
Westborough, MA
Tel: 774-760-0087
Fax: 774-760-0088

Chicago
Itasca, IL
Tel: 630-285-0071
Fax: 630-285-0075

Dallas
Addison, TX
Tel: 972-818-7423
Fax: 972-818-2924

Detroit
Novi, MI
Tel: 248-848-4000

Houston, TX
Tel: 281-894-5983

Indianapolis
Noblesville, IN
Tel: 317-773-8323
Fax: 317-773-5453
Tel: 317-536-2380

Los Angeles
Mission Viejo, CA
Tel: 949-462-9523
Fax: 949-462-9608
Tel: 951-273-7800

Raleigh, NC
Tel: 919-844-7510

New York, NY
Tel: 631-435-6000

San Jose, CA
Tel: 408-735-9110
Tel: 408-436-4270

Canada - Toronto
Tel: 905-695-1980
Fax: 905-695-2078

ASIA/PACIFIC

Asia Pacific Office
Suites 3707-14, 37th Floor
Tower 6, The Gateway
Harbour City, Kowloon

Hong Kong
Tel: 852-2943-5100
Fax: 852-2401-3431

Australia - Sydney
Tel: 61-2-9868-6733
Fax: 61-2-9868-6755

China - Beijing
Tel: 86-10-8569-7000
Fax: 86-10-8528-2104

China - Chengdu
Tel: 86-28-8665-5511
Fax: 86-28-8665-7889

China - Chongqing
Tel: 86-23-8980-9588
Fax: 86-23-8980-9500

China - Dongguan
Tel: 86-769-8702-9880

China - Guangzhou
Tel: 86-20-8755-8029

China - Hangzhou
Tel: 86-571-8792-8115
Fax: 86-571-8792-8116

China - Hong Kong SAR
Tel: 852-2943-5100
Fax: 852-2401-3431

China - Nanjing
Tel: 86-25-8473-2460
Fax: 86-25-8473-2470

China - Qingdao
Tel: 86-532-8502-7355
Fax: 86-532-8502-7205

China - Shanghai
Tel: 86-21-3326-8000
Fax: 86-21-3326-8021

China - Shenyang
Tel: 86-24-2334-2829
Fax: 86-24-2334-2393

China - Shenzhen
Tel: 86-755-8864-2200
Fax: 86-755-8203-1760

China - Wuhan
Tel: 86-27-5980-5300
Fax: 86-27-5980-5118

China - Xian
Tel: 86-29-8833-7252
Fax: 86-29-8833-7256

ASIA/PACIFIC

China - Xiamen
Tel: 86-592-2388138
Fax: 86-592-2388130

China - Zhuhai
Tel: 86-756-3210040
Fax: 86-756-3210049

India - Bangalore
Tel: 91-80-3090-4444
Fax: 91-80-3090-4123

India - New Delhi
Tel: 91-11-4160-8631
Fax: 91-11-4160-8632

India - Pune
Tel: 91-20-3019-1500

Japan - Osaka
Tel: 81-6-6152-7160
Fax: 81-6-6152-9310

Japan - Tokyo
Tel: 81-3-6880- 3770
Fax: 81-3-6880-3771

Korea - Daegu
Tel: 82-53-744-4301
Fax: 82-53-744-4302

Korea - Seoul
Tel: 82-2-554-7200
Fax: 82-2-558-5932 or
82-2-558-5934

Malaysia - Kuala Lumpur
Tel: 60-3-6201-9857
Fax: 60-3-6201-9859

Malaysia - Penang
Tel: 60-4-227-8870
Fax: 60-4-227-4068

Philippines - Manila
Tel: 63-2-634-9065
Fax: 63-2-634-9069

Singapore
Tel: 65-6334-8870
Fax: 65-6334-8850

Taiwan - Hsin Chu
Tel: 886-3-5778-366
Fax: 886-3-5770-955

Taiwan - Kaohsiung
Tel: 886-7-213-7830

Taiwan - Taipei
Tel: 886-2-2508-8600
Fax: 886-2-2508-0102

Thailand - Bangkok
Tel: 66-2-694-1351
Fax: 66-2-694-1350

EUROPE

Austria - Wels
Tel: 43-7242-2244-39
Fax: 43-7242-2244-393

Denmark - Copenhagen
Tel: 45-4450-2828
Fax: 45-4485-2829

Finland - Espoo
Tel: 358-9-4520-820

France - Paris
Tel: 33-1-69-53-63-20
Fax: 33-1-69-30-90-79

France - Saint Cloud
Tel: 33-1-30-60-70-00

Germany - Garching
Tel: 49-8931-9700

Germany - Haan
Tel: 49-2129-3766400

Germany - Heilbronn
Tel: 49-7131-67-3636

Germany - Karlsruhe
Tel: 49-721-625370

Germany - Munich
Tel: 49-89-627-144-0
Fax: 49-89-627-144-44

Germany - Rosenheim
Tel: 49-8031-354-560

Israel - Ra'anana
Tel: 972-9-744-7705

Italy - Milan
Tel: 39-0331-742611
Fax: 39-0331-466781

Italy - Padova
Tel: 39-049-7625286

Netherlands - Drunen
Tel: 31-416-690399
Fax: 31-416-690340

Norway - Trondheim
Tel: 47-7289-7561

Poland - Warsaw
Tel: 48-22-3325737

Romania - Bucharest
Tel: 40-21-407-87-50

Spain - Madrid
Tel: 34-91-708-08-90
Fax: 34-91-708-08-91

Sweden - Gothenberg
Tel: 46-31-704-60-40

Sweden - Stockholm
Tel: 46-8-5090-4654

UK - Wokingham
Tel: 44-118-921-5800
Fax: 44-118-921-5820

© 2016-2017 Microchip Technology Inc.

Mouser Electronics

Authorized Distributor

Click to View Pricing, Inventory, Delivery & Lifecycle Information:

Microchip:
SCH3222I-SX SCH3223I-7U SCH3227I-SZ-TR SCH3226-SY-TR SCH3226I-SY SCH3227I-SZ SCH3226I-SY-TR SCH3224I-SY SCH3224I-SY-TR

Компания «ЭлектроПласт» предлагает заключение долгосрочных отношений при поставках импортных электронных компонентов на взаимовыгодных условиях!

Наши преимущества:

- Оперативные поставки широкого спектра электронных компонентов отечественного и импортного производства напрямую от производителей и с крупнейших мировых складов;
- Поставка более 17-ти миллионов наименований электронных компонентов;
- Поставка сложных, дефицитных, либо снятых с производства позиций;
- Оперативные сроки поставки под заказ (от 5 рабочих дней);
- Экспресс доставка в любую точку России;
- Техническая поддержка проекта, помощь в подборе аналогов, поставка прототипов;
- Система менеджмента качества сертифицирована по Международному стандарту ISO 9001;
- Лицензия ФСБ на осуществление работ с использованием сведений, составляющих государственную тайну;
- Поставка специализированных компонентов (Xilinx, Altera, Analog Devices, Intersil, Interpoint, Microsemi, Aeroflex, Peregrine, Syfer, Eurofarad, Texas Instrument, Miteq, Cobham, E2V, MA-COM, Hittite, Mini-Circuits,General Dynamics и др.);

Помимо этого, одним из направлений компании «ЭлектроПласт» является направление «Источники питания». Мы предлагаем Вам помощь Конструкторского отдела:

- Подбор оптимального решения, техническое обоснование при выборе компонента;
- Подбор аналогов;
- Консультации по применению компонента;
- Поставка образцов и прототипов;
- Техническая поддержка проекта;
- Защита от снятия компонента с производства.

Как с нами связаться

Телефон: 8 (812) 309 58 32 (многоканальный)
Факс: 8 (812) 320-02-42
Электронная почта: org@eplast1.ru
Адрес: 198099, г. Санкт-Петербург, ул. Калинина, дом 2, корпус 4, литера А.