8 BIT MICROPOWER MULTIPLYING D/A CONVERTER

GENERAL DESCRIPTION

The ALD1801 is an 8-bit monolithic current output digital to analog converter designed to provide low power, low operating voltage and simple operation. It offers industry pin configuration of DAC-08 types, and is intended for a wide range of digital to analog conversion and control applications in +5V single power supply and ±5V dual power supply systems, as well as +3V to +12V battery operated systems. Device characteristics are specified for +5V single supply and 3.3V dual supply systems.

The ALD1801 is manufactured with Advanced Linear Devices' enhanced ACMOS silicon gate CMOS process and has been designed to be also used as a linear cell element in Advanced Linear Devices' "Function-Specific" ASIC, as it is fully compatible in design, operation, and manufacture with all other linear elements in Advanced Linear Devices' product family.

The ALD1801 is designed with matching between reference and full scale currents. Digital inputs are standard CMOS logic inputs to provide ease of interface. Output currents can be directly converted to a voltage output by using a pair of resistors. When used with ALD's rail-to-rail output operational amplifiers such as the ALD1702, full scale output of 0 to +5V can be easily achieved with single +5V power supply.

ORDERING INFORMATION

Operating Temperature Range		
-55°C to +125°C	0°C to +70°C	0°C to +70°C
16-Pin CERDIP Package	16-Pin Small Outline Package(SOIC)	16-Pin Plastic Dip Package
ALD1801A DC ALD1801B DC ALD1801 DC	ALD1801A SC ALD1801B SC ALD1801 SC	ALD1801A PC ALD1801B PC ALD1801 PC

* Contact factory for industrial temperature range

FEATURES

- Low voltage 3V to 12V operation
- Low power 1.8mW max @ 3.3V
- Single supply operation (5V or 3.3V)
- Direct CMOS logic interface
- Complementary current outputs
- Nonlinearity to 0.1% max over temperature range
- High input impedance
- Low full scale current
- High output impedance

PIN CONFIGURATION

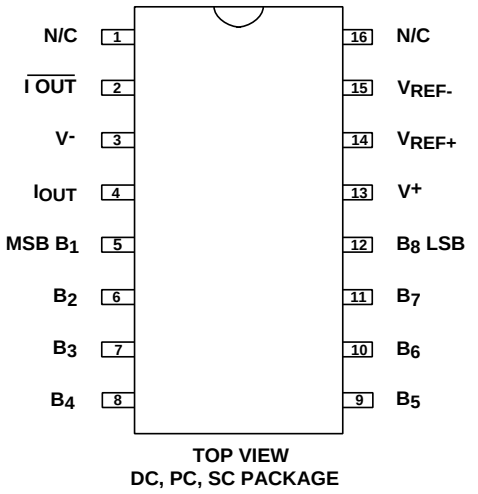

TOP VIEW
DC, PC, SC PACKAGE

* N/C Pin is connected internally. Do not connect externally.

BLOCK DIAGRAM

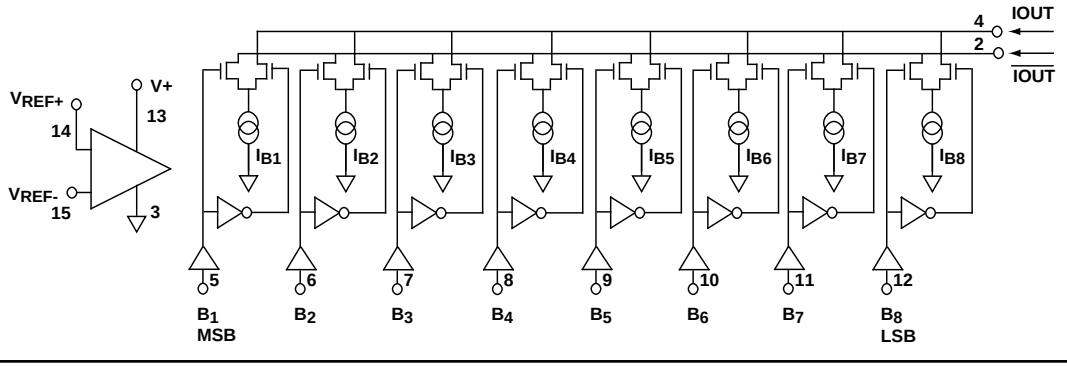

© 1998 Advanced Linear Devices, Inc. 415 Tasman Drive, Sunnyvale, California 94089 -1706 Tel: (408) 747-1155 Fax: (408) 747-1286 http://www.aldinc.com

OPERATING ELECTRICAL CHARACTERISTICS
T_A = 25°C V_S = ±2.5V or V_S = +5.0V unless otherwise specifie

Parameter	Symbol	1801A			1801B			1801			Unit	Test Conditions
		Min	Typ	Max	Min	Typ	Max	Min	Typ	Max		
Supply Voltage	V_S	±1.5		±6.0	±1.5		±6.0	±1.5		±6.0	V	Dual Supply Single Supply
Resolution		8			8			8			Bits	
Monotonicity		8			8			8			Bits	
Nonlinearity	N_L			±0.1			±0.19			±0.39	% of Full Scale	
Settling Time	t_S		2.5	5.0		2.5	5.0		2.5	5.0	µs	To 1/2 LSB with all bits turned on/off
Propagation Delay	t_d		1.5 1.5	2.5 2.5		1.5 1.5	2.5 2.5		1.5 1.5	2.5 2.5	µs µs	Each Bit All Bits
Full Scale Tempco	T_C		±10	±50		±10	±50		±10	±50	ppm/°C	
Output Compliance	V_{OC}	V- +1.5		V+ +0.2	V- +1.5		V+ +0.2	V- +1.5		V+ +0.2	V	
Output Impedance		50			50			50			MΩ	Output Within Compliance limits
Full Scale Current Range	I_{FS}		100			100			100		µA	$R_{OUT} = R_{\overline{OUT}}$ = 50KΩ V_{REF} = 2.5V; R_{REF} =25KΩ
Full Scale Symmetry	I_{FSS}			±2.5			±2.5			±2.5	µA	
Zero Scale Current	I_{ZS}			10			10			10	nA	
Logic Input Level [1] Logic "0" Logic "1"	 V_{IL} V_{IH}	 2.1		 -1.1	 2.1		 -1.1	 2.1		 -1.1	V	Supply = ±2.5V
Logic Swing Logic Threshold Range	V_{LS}	-2.8 -1.5		2.8 1.5	-2.8 -1.5		2.8 1.5	-2.8 -1.5		2.8 1.5	V V	Supply = ±2.5V Supply = ±2.5V
Reference Bias Current	I_{RB}			0.1			0.1			0.1	nA	
Power Supply Current	$+I_S$ $-I_S$		500 700	800 1000		500 700	800 1000		500 700	800 1000	µA	Full Scale Output = 100µA
Power Dissipation	P_D			4.5			4.5			4.5	mW	Supply = ±2.5V
Compensation												Not Required

Notes: 1. Contact ALD for ±1.0V/±1.25V operation
2. Logic levels of V_{IL} 0.4V and V_{IH} 4.6V for single supply applications.

OPERATING ELECTRICAL CHARACTERISTICS

T_A = 25°C V_S = ±1.65V or V_S = +3.3V unless otherwise specified

Parameter	Symbol	1801A			1801B			1801			Unit	Test Conditions
		Min	Typ	Max	Min	Typ	Max	Min	Typ	Max		
Resolution		8			8			8			Bits	
Monotonicity		8			8			8			Bits	
Nonlinearity	N_L			±0.1			±0.19			±0.39	% of Full Scale	
Settling Time	t_S		4.0	10.0		4.0	10.0		4.0	10.0	µs	To 1/2 LSB with all bits turned on/off
Propagation Delay	t_d		1.5 1.5	4.0 4.0		1.5 1.5	4.0 4.0		1.5 1.5	4.0 4.0	µs µs	Each Bits All Bits
Full Scale Tempco	T_C		±10	±50		±10	±50		±10	±50	ppm/°C	
Output Compliance	V_{OC}	V^- +1.5		V^+ +0.2	V^- +1.5		V^+ +0.2	V^- +1.5		V^+ +0.2	V	
Output Impedance		50			50			50			MΩ	Output Within Compliance limits
Full Scale Current Range	I_{FS}		50			50			50		µA	$R_{OUT} = R_{\overline{OUT}} = 100K\Omega$ $V_{REF} = 2.5V$; $R_{REF} = 50K\Omega$
Full Scale Symmetry	I_{FSS}			±2.5			±2.5			±2.5	µA	
Zero Scale Current	I_{ZS}			10			10			10	nA	
Reference Bias Current	I_{RB}			0.1			0.1			0.1	nA	
Power Supply Current	$+I_S$ $-I_S$		350 450	500 600		350 450	500 600		350 450	500 600	µA	Full Scale Output = 50µA
Power Dissipation	P_D			1.8			1.8			1.8	mW	

DUAL SUPPLY ±2.5V
RATIOMETRIC VOLTAGE OUTPUT DAC

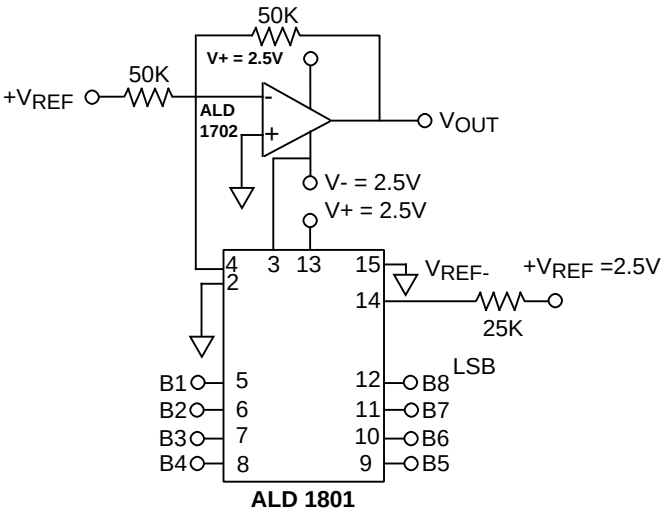

	B1	B2	B3	B4	B5	B6	B7	B8	V_{OUT}
Zero Scale	0	0	0	0	0	0	0	0	-2.500
LSB	0	0	0	0	0	0	0	1	-2.480
Half Scale -LSB	0	1	1	1	1	1	1	1	-0.019
Half Scale	1	0	0	0	0	0	0	0	0.000
Half Scale +LSB	1	0	0	0	0	0	0	1	0.019
Full Scale	1	1	1	1	1	1	1	1	2.480

SINGLE SUPPLY 3.3V
RATIOMETRIC VOLTAGE OUTPUT DAC

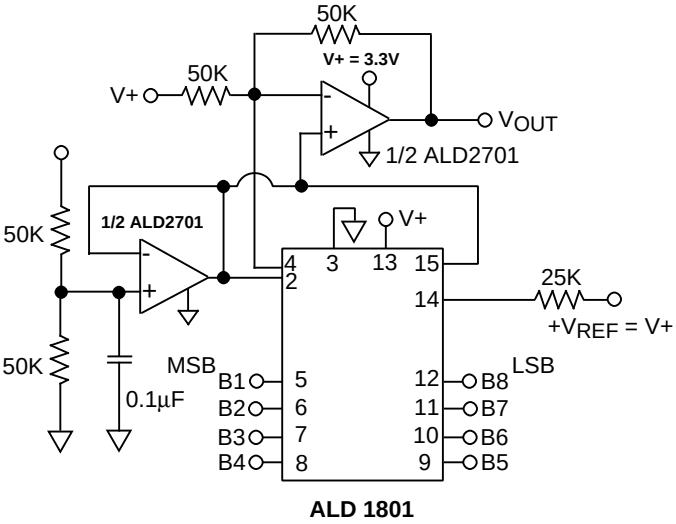

	B1	B2	B3	B4	B5	B6	B7	B8	V_{OUT}
Zero Scale	0	0	0	0	0	0	0	0	0.000
Half Scale	1	0	0	0	0	0	0	0	1.650
Full Scale	1	1	1	1	1	1	1	1	3.287

APPLICATIONS NOTES:

The ALD1801 is an 8 bit multiplying D/A converter. It has been designed to operate with standard single or split power supplies of 5V or ±5V. Functionality extends down to 3V or ±1.5V power supply, making it ideal for lithium battery or rechargeable battery operated systems where power efficiency and performance are important design parameters.

The ALD1801 features ultra low quiescent bias current which depends on the operating current in the internal current steering circuit. A high gain internal operational amplifier is fully compensated for stable operation without any need for external capacitor compensation. The operational amplifier is placed in a negative feedback loop to generate the reference current for ratio matched transistors. It is trimmed to provide nonlinearity as specified. In some applications this feature can be used along with the multiplying nature of the ALD1801 to obtain 9 or 10 bit digital to analog conversion with external switches.

The ALD1801 is a multiplying D/A converter in which the output is a current that is a function of an 8 bit digital input word multiplied by the reference current. The reference current may be a fixed reference current or a varying input current. If a fixed reference voltage or a varying low impedance voltage output source is used, a fixed value resistor (referred to as RREF) can be used to convert the voltage into a reference current for most applications.

R_{REF} is a precision fixed resistor without trimming. Trimming can be accomplished by adjusting R_{REF} through either connecting a potentiometer in series with a fixed resistor or by substituting the fixed resistor with a multi-turn potentiometer. The recommended nominal value of R_{REF} is 25KΩ.

The ALD1801 can operate from single power supply or dual supplies up to ±6.6V. Symmetrical supplies are not required in the case of dual supply operation. However, V_{REF-} input voltage must be set at 1V or higher above the V- voltage. Due to the internal operational amplifier feedback, V_{REF+} input terminal would be set at the same potential as V_{REF-} input terminal, with the input reference current determined by: Input reference current

$I_{REF} = \{ (V_{REF+}) - (V_{REF-}) \} / R_{REF}$

The ALD1801 is fabricated in CMOS technology and provides direct logic interface to all CMOS logic families including logic levels of the CD4000 and 74C logic families operating at logic voltage levels other than 5V. It is primarily designed to operate in a power supply environment where interface takes place between digital logic circuitry and analog circuitry. Both types of circuitry operate with the same power supplies.

The nonlinearity and monotonicity of the ALD1801 applies over the full rated operating temperature. The device has been developed with minimal temperature drift, typically at ±10ppm/°C. A single array of matched and tracked resistor networks of nominal 50KΩ can be used for all the resistors required for the D/A converter. As an example, R_{REF} can be set to 25KΩ by connecting two 50KΩ resistors in parallel where output resistors are set at 50KΩ.

Due to the very low quiescent and reference currents used, layout of the circuit board to minimize any parasitic capacitance is important in getting high frequency operation, as the settling time is due in large part to the output currents charging and discharging the node capacitances at the output. As the internal bias current levels is adaptive to the reference current, the switching speed of the device depends on the reference current selected. Characterization of the settling time has been performed at full scale current set at 100μA and device operation at single 5V supply. Faster operation can be obtained by using short leads, minimizing output capacitance, load resistor values, and by adequate bypass capacitors placed on the board at the supply and reference nodes.

Both I_O and I_O outputs can be used simultaneously. If one of the outputs is not used, then it must be connected to ground or a potential where the sum of I_O and I_O can maintain a constant value. Due to internal leakage currents that vary with temperature, it is recommended that I_{FS} of 50μA to 100μA be used so that 1/2LSB bit current is set at as high a level as possible. The temperature coefficient of the reference resistor R_{REF} and output resistors R_{OUT} and R_{OUT} should match to minimize temperature drift.

TYPICAL PERFORMANCE CHARACTERISTICS

PROPAGATION DELAY AS A FUNCTION OF FULL SCALE OUTPUT CURRENT

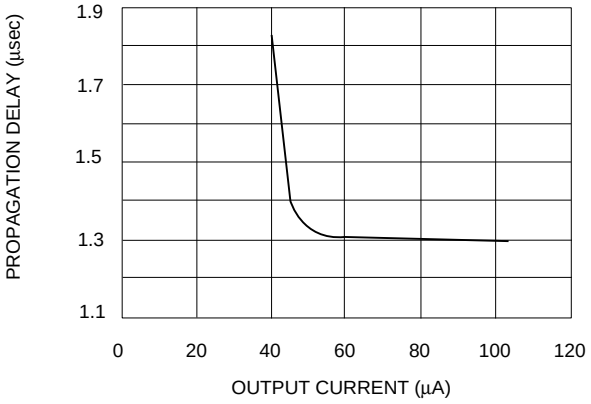

SUPPLY CURRENT AS A FUNCTION OF TEMPERATURE

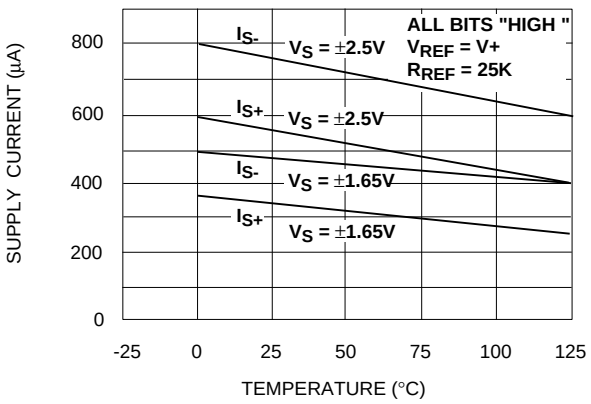

SUPPLY CURRENT AS A FUNCTION OF SUPPLY VOLTAGE

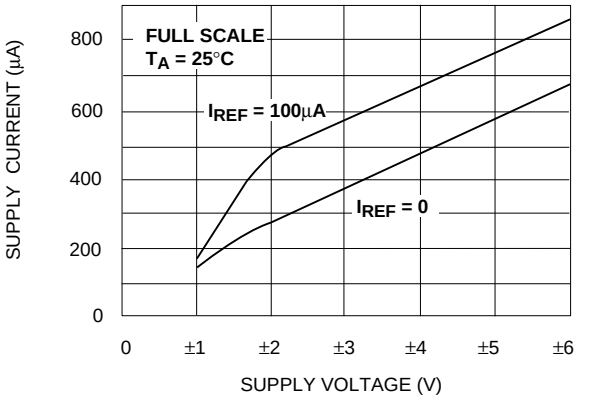

FULL SCALE OUTPUT CURRENT AS A FUNCTION OF SUPPLY VOLTAGE

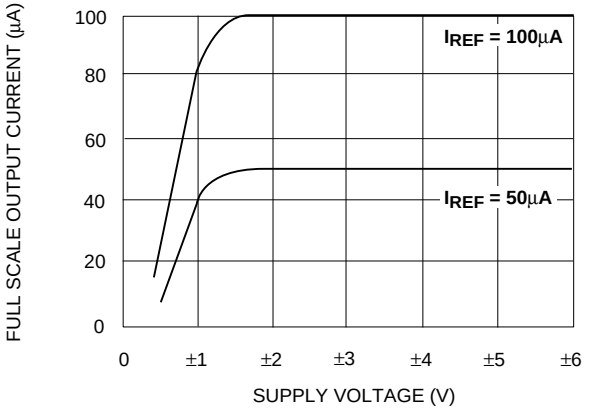

FULL SCALE OUTPUT CURRENT AS A FUNCTION OF OUTPUT VOLTAGE (COMPLIANCE)

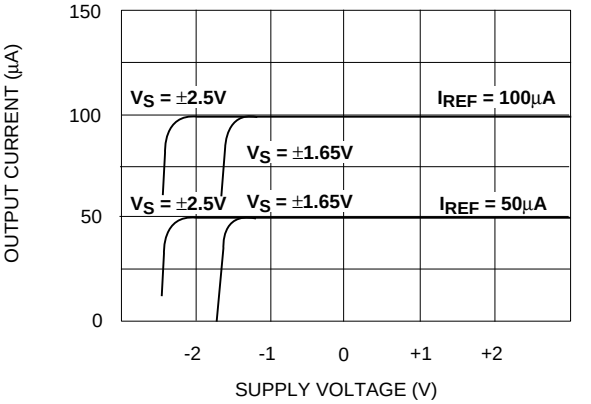

FULL SCALE OUTPUT CURRENT AS A FUNCTION OF REFRENCE CURRENT

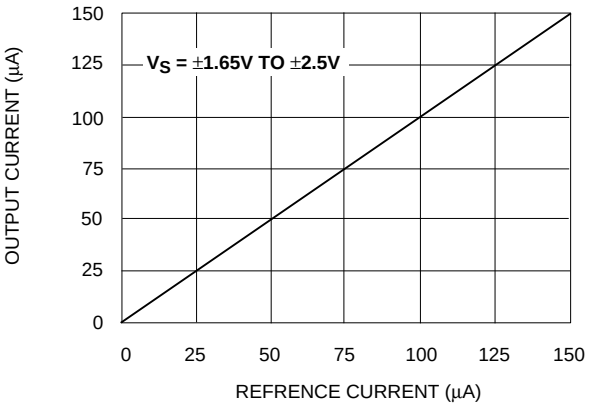

Компания «ЭлектроПласт» предлагает заключение долгосрочных отношений при поставках импортных электронных компонентов на взаимовыгодных условиях!

Наши преимущества:

- Оперативные поставки широкого спектра электронных компонентов отечественного и импортного производства напрямую от производителей и с крупнейших мировых складов;
- Поставка более 17-ти миллионов наименований электронных компонентов;
- Поставка сложных, дефицитных, либо снятых с производства позиций;
- Оперативные сроки поставки под заказ (от 5 рабочих дней);
- Экспресс доставка в любую точку России;
- Техническая поддержка проекта, помощь в подборе аналогов, поставка прототипов;
- Система менеджмента качества сертифицирована по Международному стандарту ISO 9001;
- Лицензия ФСБ на осуществление работ с использованием сведений, составляющих государственную тайну;
- Поставка специализированных компонентов (Xilinx, Altera, Analog Devices, Intersil, Interpoint, Microsemi, Aeroflex, Peregrine, Syfer, Eurofarad, Texas Instrument, Miteq, Cobham, E2V, MA-COM, Hittite, Mini-Circuits,General Dynamics и др.);

Помимо этого, одним из направлений компании «ЭлектроПласт» является направление «Источники питания». Мы предлагаем Вам помощь Конструкторского отдела:

- Подбор оптимального решения, техническое обоснование при выборе компонента;
- Подбор аналогов;
- Консультации по применению компонента;
- Поставка образцов и прототипов;
- Техническая поддержка проекта;
- Защита от снятия компонента с производства.

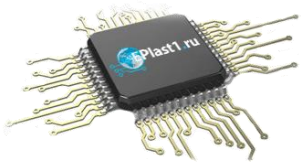

Как с нами связаться

Телефон: 8 (812) 309 58 32 (многоканальный)
Факс: 8 (812) 320-02-42
Электронная почта: org@eplast1.ru
Адрес: 198099, г. Санкт-Петербург, ул. Калинина, дом 2, корпус 4, литера А.