+3.3 V/+5 V Multiplying 12-Bit DACs

AD7943/AD7945/AD7948

FEATURES

12-Bit Multiplying DACs
Guaranteed Specifications with +3.3 V/+5 V Supply
0.5 LSBs INL and DNL
Low Power: 5 μW typ
Fast Interface
- **40 ns Strobe Pulsewidth (AD7943)**
- **40 ns Write Pulsewidth (AD7945, AD7948)**

Low Glitch: 60 nV-s with Amplifier Connected
Fast Settling: 600 ns to 0.01% with AD843

APPLICATIONS

Battery-Powered Instrumentation
Laptop Computers
Upgrades for All 754x Series DACs (5 V Designs)

FUNCTIONAL BLOCK DIAGRAMS

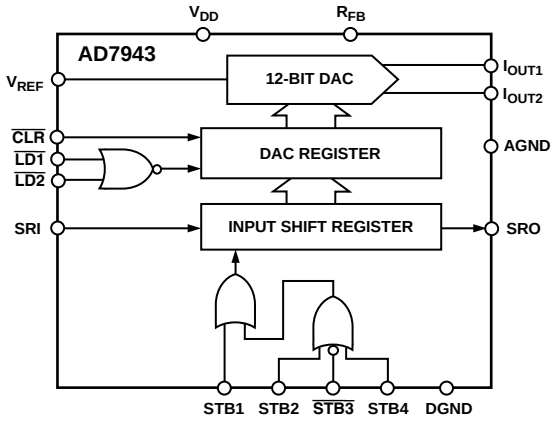

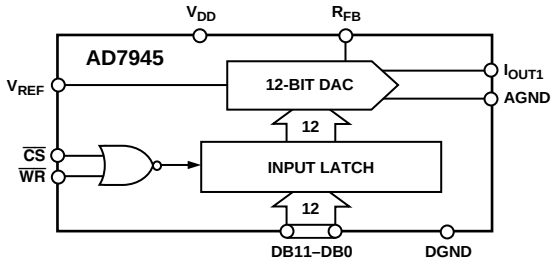

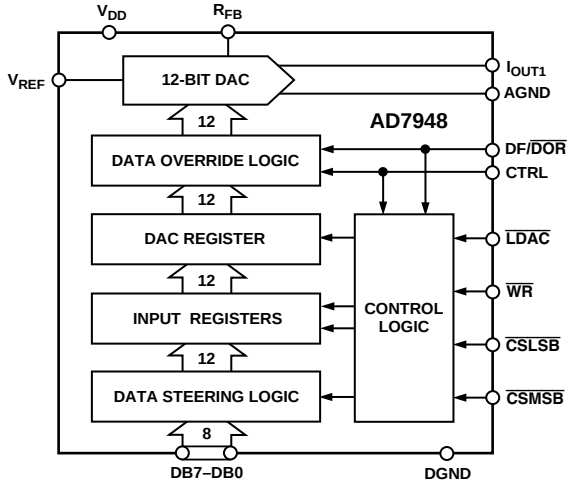

GENERAL DESCRIPTION

The AD7943, AD7945 and AD7948 are fast 12-bit multiplying DACs that operate from a single +5 V supply (Normal Mode) and a single +3.3 V to +5 V supply (Biased Mode). The AD7943 has a serial interface, the AD7945 has a 12-bit parallel interface, and the AD7948 has an 8-bit byte interface. They will replace the industry-standard AD7543, AD7545 and AD7548 in many applications, and they offer superior speed and power consumption performance.

The AD7943 is available in 16-lead DIP, 16-lead SOP (Small Outline Package) and 20-lead SSOP (Shrink Small Outline Package).

The AD7945 is available in 20-lead DIP, 20-lead SOP and 20-lead SSOP.

The AD7948 is available in 20-lead DIP, 20-lead SOP and 20-lead SSOP.

REV. B

Information furnished by Analog Devices is believed to be accurate and reliable. However, no responsibility is assumed by Analog Devices for its use, nor for any infringements of patents or other rights of third parties which may result from its use. No license is granted by implication or otherwise under any patent or patent rights of Analog Devices.

One Technology Way, P.O. Box 9106, Norwood, MA 02062-9106, U.S.A.
Tel: 781/329-4700 World Wide Web Site: http://www.analog.com
Fax: 781/326-8703
© Analog Devices, Inc., 1998

AD7943/AD7945/AD7948–SPECIFICATIONS[1]

NORMAL MODE (AD7943: V_{DD} = +4.5 V to +5.5 V; V_{IOUT1} = V_{IOUT2} = AGND = 0 V; V_{REF} = +10 V; T_A = T_{MIN} to T_{MAX}, unless otherwise noted. AD7945, AD7948: V_{DD} = +4.5 V to +5.5 V; V_{IOUT1} = AGND = 0 V; V_{REF} = +10 V; T_A = T_{MIN} to T_{MAX}, unless otherwise noted.)

Parameter	B Grades[2]	T Grade[2, 3]	Units	Test Conditions/Comments
ACCURACY				
Resolution	12	12	Bits	1 LSB = $V_{REF}/2^{12}$ = 2.44 mV when V_{REF} = 10 V
Relative Accuracy	±0.5	±0.5	LSB max	
Differential Nonlinearity	±0.5	±0.5	LSB max	All Grades Guaranteed Monotonic over Temperature
Gain Error				
T_{MIN} to T_{MAX}	±2	±2	LSB max	
Gain Temperature Coefficient[4]	2	2	ppm FSR/°C typ	
	5	5	ppm FSR/°C max	
Output Leakage Current				
I_{OUT1}				
@ +25°C	10	10	nA max	See Terminology Section
T_{MIN} to T_{MAX}	100	100	nA max	Typically 20 nA over Temperature
REFERENCE INPUT				
Input Resistance	6	6	kΩ min	Typical Input Resistance = 9 kΩ
	12	12	kΩ max	
DIGITAL INPUTS				
V_{INH}, Input High Voltage	2.4	2.4	V min	
V_{INL}, Input Low Voltage	0.8	0.8	V max	
I_{INH}, Input Current	±1	±1	µA max	
C_{IN}, Input Capacitance[4]	10	10	pF max	
DIGITAL OUTPUT (AD7943 SRO)				For 1 CMOS Load
Output Low Voltage (V_{OL})	0.2	0.2	V max	
Output High Voltage (V_{OH})	V_{DD} – 0.2	V_{DD} – 0.2	V min	
POWER REQUIREMENTS				
V_{DD} Range	4.5/5.5	4.5/5.5	V min/V max	
Power Supply Sensitivity[4]				
$\Delta Gain/\Delta V_{DD}$	–75	–75	dB typ	
I_{DD} (AD7943)	5	5	µA max	V_{INH} = V_{DD} – 0.1 V min, V_{INL} = 0.1 V max. SRO Open Circuit. No STB Signal. Typically 1 µA. Typically 100 µA with a 1 MHz STB Frequency. At Input Levels of 0.8 V and 2.4 V, I_{DD} Is Typically 2.5 mA.
I_{DD} (AD7945, AD7948)	5	5	µA max	V_{INH} = V_{DD} – 0.1 V min, V_{INL} = 0.1 V max. Typically 1 µA. At Input Levels of 0.8 V and 2.4 V, I_{DD} Is Typically 2.5 mA.

NOTES
[1]The AD7943, AD7945 and AD7948 are specified in the normal current mode configuration and in the biased current mode for single-supply applications. Figures 14 and 15 are examples of normal mode operation.
[2]Temperature ranges as follows: B Grades: –40°C to +85°C; T Grade: –55°C to +125°C.
[3]The T Grade applies to the AD7945 only.
[4]Guaranteed by design.
Specifications subject to change without notice.

SPECIFICATIONS[1]

BIASED MODE (AD7943: V_{DD} = +3 V to +5.5 V; V_{IOUT1} = V_{IOUT2} = AGND = 1.23 V; V_{REF} = +0 V to 2.45 V; T_A = T_{MIN} to T_{MAX}, unless otherwise noted. AD7945, AD7948: V_{DD} = +3 V to +5.5 V; V_{IOUT1} = AGND = 1.23 V; V_{REF} = +0 V to 2.45 V; T_A = T_{MIN} to T_{MAX}, unless otherwise noted.)

Parameter	A Grades[2]	Units	Test Conditions/Comments
ACCURACY			
Resolution	12	Bits	1 LSB = (V_{IOUT1} – V_{REF})/2^{12} = 300 µV When V_{IOUT1} = 1.23 V and V_{REF} = 0 V
Relative Accuracy	±1	LSB max	
Differential Nonlinearity	±0.9	LSB max	All Grades Guaranteed Monotonic over Temperature
Gain Error @ +25°C	±3	LSB max	
T_{MIN} to T_{MAX}	±4	LSB max	
Gain Temperature Coefficient[3]	2	ppm FSR/°C typ	
	5	ppm FSR/°C max	
Output Leakage Current			See Terminology Section
I_{OUT1}			
@ +25°C	10	nA max	
T_{MIN} to T_{MAX}	100	nA max	Typically 20 nA over Temperature
Input Resistance			This Varies with DAC Input Code
@ I_{OUT2} Pin (AD7943)	6	kΩ min	
@ AGND Pin (AD7945, AD7948)	6	kΩ min	
DIGITAL INPUTS			
V_{INH}, Input High Voltage @ V_{DD} = +5 V	2.4	V min	
V_{INH}, Input High Voltage @ V_{DD} = +3.3 V	2.1	V min	
V_{INL}, Input Low Voltage @ V_{DD} = +5 V	0.8	V max	
V_{INL}, Input Low Voltage @ V_{DD} = +3.3 V	0.6	V max	
I_{INH}, Input Current	±1	µA max	
C_{IN}, Input Capacitance[3]	10	pF max	
DIGITAL OUTPUT (SRO)			For 1 CMOS Load
Output Low Voltage (V_{OL})	0.2	V max	
Output High Voltage (V_{OH})	V_{DD} – 0.2	V min	
POWER REQUIREMENTS			
V_{DD} Range	3.0/5.5	V min/V max	
Power Supply Sensitivity[3]			
ΔGain/ΔV_{DD}	–75	dB typ	
I_{DD} (AD7943)	5	µA max	V_{INH} = V_{DD} – 0.1 V min, V_{INL} = 0.1 V max. SRO Open Circuit; No STB Signal; Typically 1 µA. Typically 100 µA with 1 MHz STB Frequency.
I_{DD} (AD7945, AD7948)	5	µA max	V_{INH} = V_{DD} – 0.1 V min, V_{INL} = 0.1 V max. Typically 1 µA.

NOTES

[1]These specifications apply with the devices biased up at 1.23 V for single supply applications. The model numbering reflects this by means of a "–B" suffix (for example: AD7943AN-B). Figure 16 is an example of Biased Mode Operation.

[2]Temperature ranges as follows: A Versions: –40°C to +85°C.

[3]Guaranteed by design.

Specifications subject to change without notice.

AC PERFORMANCE CHARACTERISTICS

NORMAL MODE (AD7943: V_{DD} = +4.5 V to +5.5 V; V_{IOUT1} = V_{IOUT2} = AGND = 0 V. AD7945, AD7948: V_{DD} = +4.5 V to +5.5 V; V_{IOUT1} =AGND = 0 V. V_{REF} = 6 V rms, 1 kHz sine wave; T_A = T_{MIN} to T_{MAX}; DAC output op amp is AD843; unless otherwise noted.) These characteristics are included for Design Guidance and are not subject to test.

Parameter	B Grades	T Grade	Units	Test Conditions/Comments
DYNAMIC PERFORMANCE				
Output Voltage Settling Time	600	700	ns typ	To 0.01% of Full-Scale Range. V_{REF} = +10 V; DAC Latch Alternately Loaded with All 0s and All 1s
Digital to Analog Glitch Impulse	60	60	nV-s typ	Measured with V_{REF} = 0 V. DAC Latch Alternately Loaded with All 0s and All 1s
Multiplying Feedthrough Error	–75	–75	dB max	DAC Latch Loaded with All 0s
Output Capacitance	60	60	pF max	All 1s Loaded to DAC
	30	30	pF max	All 0s Loaded to DAC
Digital Feedthrough (AD7943)	5	5	nV-s typ	Feedthrough to the DAC Output with $\overline{LD1}$, $\overline{LD2}$ High and Alternate Loading of All 0s and All 1s into the Input Shift Register
Digital Feedthrough (AD7945, AD7948)	5	5	nV-s typ	Feedthrough to the DAC Output with $\overline{CS}$ High and Alternate Loading of All 0s and All 1s to the DAC Bus
Total Harmonic Distortion	–83	–83	dB typ	
Output Noise Spectral Density @ 1 kHz	35	35	nV/√Hz typ	All 1s Loaded to DAC. V_{REF} = 0 V. Output Op Amp Is OP07

Specifications subject to change without notice.

AC PERFORMANCE CHARACTERISTICS

BIASED MODE (AD7943: V_{DD} = +3 V to +5.5 V; V_{IOUT1} = V_{IOUT2} = AGND = 1.23 V. AD7945, AD7948: V_{DD} = +3 V to +5.5 V; V_{IOUT1} = AGND = 1.23 V. V_{REF} = 1 kHz, 2.45 V p-p, sine wave biased at 1.23 V; DAC output op amp is AD820; T_A = T_{MIN} to T_{MAX}; unless otherwise noted.) These characteristics are included for Design Guidance and are not subject to test.

Parameter	A Grades	Units	Test Conditions/Comments
DYNAMIC PERFORMANCE			
Output Voltage Settling Time	5	µs typ	To 0.01% of Full-Scale Range. V_{REF} = 0 V DAC Latch Alternately Loaded with All 0s and All 1s
Digital to Analog Glitch Impulse	60	nV-s typ	V_{REF} = 1.23 V. DAC Register Alternately Loaded with All 0s and All 1s
Multiplying Feedthrough Error	–75	dB max	DAC Latch Loaded with All 0s
Output Capacitance	60	pF max	All 1s Loaded to DAC
	30	pF max	All 0s Loaded to DAC
Digital Feedthrough	5	nV-s typ	Feedthrough to the DAC Output with $\overline{LD1}$, $\overline{LD2}$ High and Alternate Loading of All 0s and All 1s into the Input Shift Register
Digital Feedthrough (AD7945, AD7948)	5	nV-s typ	Feedthrough to the DAC Output with CS High and Alternate Loading of All 0s and All 1s to the DAC Bus
Total Harmonic Distortion	–83	dB typ	
Output Noise Spectral Density @ 1 kHz	25	nV/√Hz typ	All 1s Loaded to DAC. V_{REF} = 1.23 V

Specifications subject to change without notice.

AD7943 TIMING SPECIFICATIONS[1] ($T_A = T_{MIN}$ to T_{MAX}, unless otherwise noted)

Parameter	Limit @ V_{DD} = +3 V to +3.6 V	Limit @ V_{DD} = +4.5 V to +5.5 V	Units	Description
t_{STB}[2]	60	40	ns min	STB Pulsewidth
t_{DS}	15	10	ns min	Data Setup Time
t_{DH}	35	25	ns min	Data Hold Time
t_{SRI}	55	35	ns min	SRI Data Pulsewidth
t_{LD}	55	35	ns min	Load Pulsewidth
t_{CLR}	55	35	ns min	CLR Pulsewidth
t_{ASB}	0	0	ns min	Min Time Between Strobing Input Shift Register and Loading DAC Register
t_{SV}[3]	60	35	ns max	STB Clocking Edge to SRO Data Valid Delay

NOTES
[1]All input signals are specified with tr = tf = 5 ns (10% to 90% of 5 V) and timed from a voltage level of 1.6 V. tr and tf should not exceed 1 μs on any digital input.
[2]STB mark/space ratio range is 60/40 to 40/60.
[3]t_{SV} is measured with the load circuit of Figure 2 and defined as the time required for the output to cross 0.8 V or 2.4 V.

Specifications subject to change without notice.

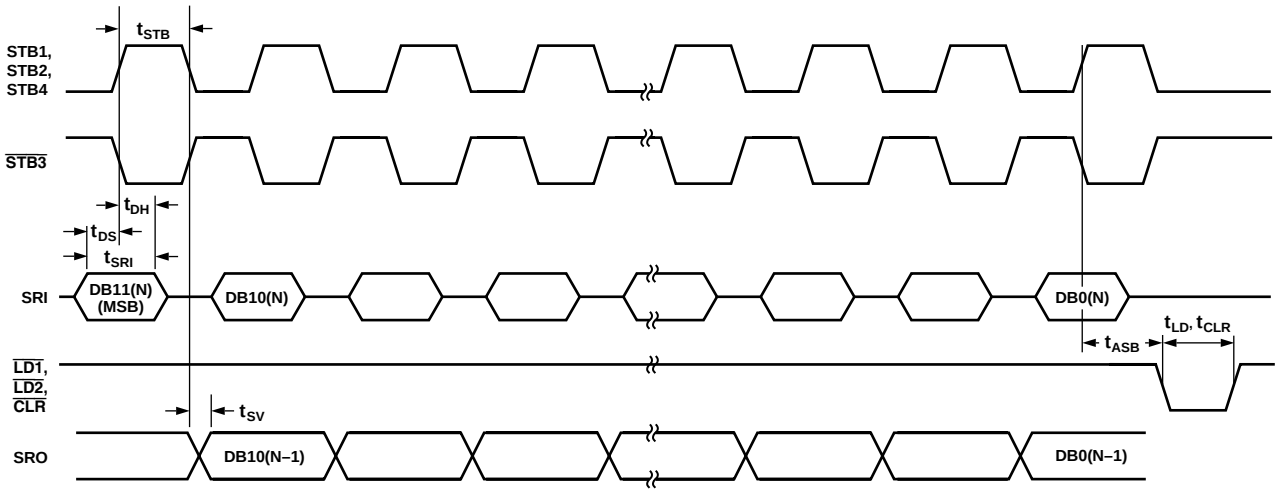

Figure 1. AD7943 Timing Diagram

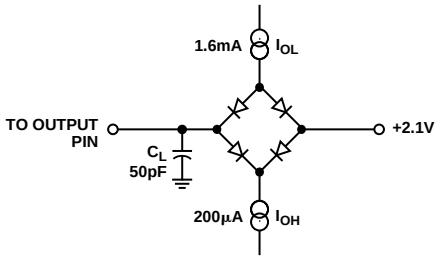

Figure 2. Load Circuit for Digital Output Timing Specifications

AD7945 TIMING SPECIFICATIONS[1] ($T_A = T_{MIN}$ to T_{MAX}, unless otherwise noted)

Parameter	Limit @ V_{DD} = +3 V to +3.6 V	Limit @ V_{DD} = +4.5 V to +5.5 V	Units	Description
t_{DS}	35	20	ns min	Data Setup Time
t_{DH}	10	10	ns min	Data Hold Time
t_{CS}	60	40	ns min	Chip Select Setup Time
t_{CH}	0	0	ns min	Chip Select Hold Time
t_{WR}	60	40	ns min	Write Pulsewidth

NOTES
[1]All input signals are specified with tr = tf = 5 ns (10% to 90% of 5 V) and timed from a voltage level of 1.6 V.
Specifications subject to change without notice.

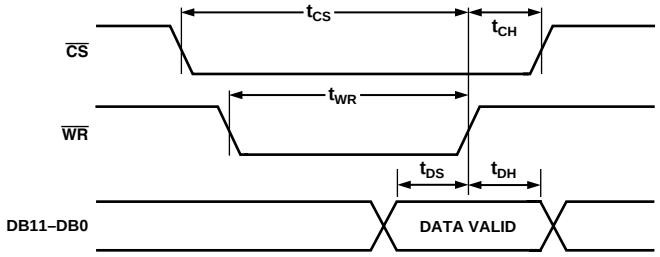

Figure 3. AD7945 Timing Diagram

AD7948 TIMING SPECIFICATIONS[1] ($T_A = T_{MIN}$ to T_{MAX}, unless otherwise noted)

Parameter	Limit @ V_{DD} = +3 V to +3.6 V	Limit @ V_{DD} = +4.5 V to +5.5 V	Units	Description
t_{DS}	45	30	ns min	Data Setup Time
t_{DH}	10	10	ns min	Data Hold Time
t_{CWS}	0	0	ns min	$\overline{CSMSB}$ or $\overline{CSLSB}$ to $\overline{WR}$ Setup Time
t_{CWH}	0	0	ns min	$\overline{CSMSB}$ or $\overline{CSLSB}$ to $\overline{WR}$ Hold Time
t_{LWS}	0	0	ns min	$\overline{LDAC}$ to $\overline{WR}$ Setup Time
t_{LWH}	0	0	ns min	$\overline{LDAC}$ to WR Hold Time
t_{WR}	60	40	ns min	Write Pulsewidth

NOTES
[1]All input signals are specified with tr = tf = 5 ns (10% to 90% of 5 V) and timed from a voltage level of 1.6 V.
Specifications subject to change without notice.

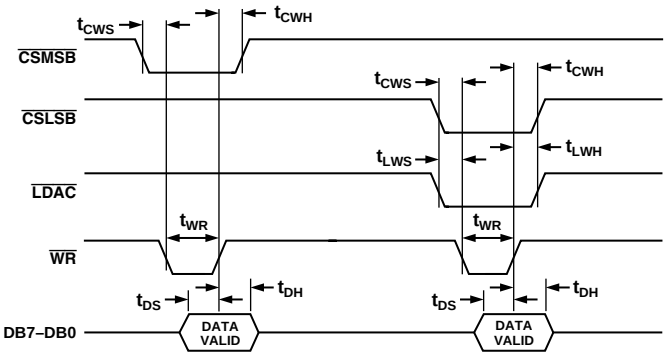

Figure 4. AD7948 Timing Diagram

ABSOLUTE MAXIMUM RATINGS[1]

(T_A = +25°C unless otherwise noted)

V_{DD} to DGND . . . . . –0.3 V to +6 V
I_{OUT1} to DGND . . . . . –0.3 V to V_{DD} + 0.3 V
I_{OUT2} to DGND . . . . . –0.3 V to V_{DD} + 0.3 V
AGND to DGND . . . . . –0.3 V to V_{DD} + 0.3 V
Digital Input Voltage to DGND . . . . . –0.3 V to V_{DD} + 0.3 V
V_{RFB}, V_{REF} to DGND . . . . . ±15 V
Input Current to Any Pin Except Supplies[2] . . . . . ±10 mA
Operating Temperature Range
  Industrial (A, B Versions) . . . . . –40°C to +85°C
  Extended (T Version) . . . . . –55°C to +125°C
Storage Temperature Range . . . . . –65°C to +150°C
Junction Temperature . . . . . +150°C
DIP Package, Power Dissipation . . . . . 670 mW
  θ_{JA} Thermal Impedance . . . . . 116°C/W
  Lead Temperature, Soldering, (10 sec) . . . . . +260°C
SOP Package, Power Dissipation . . . . . 450 mW
  θ_{JA} Thermal Impedance . . . . . 75°C/W
  Lead Temperature, Soldering
    Vapor Phase (60 sec) . . . . . +215°C
    Infrared (15 sec) . . . . . +220°C
SSOP Package, Power Dissipation . . . . . 875 mW
  θ_{JA} Thermal Impedance . . . . . 132°C/W
  Lead Temperature, Soldering
    Vapor Phase (60 sec) . . . . . +215°C
    Infrared (15 sec) . . . . . +220°C

NOTES
[1]Stresses above those listed under Absolute Maximum Ratings may cause permanent damage to the device. This is a stress rating only; functional operation of the device at these or any other conditions above those listed in the operational sections of this specification is not implied. Exposure to absolute maximum rating conditions for extended periods may affect device reliability.
[2]Transient currents of up to 100 mA will not cause SCR latch-up.

CAUTION

ESD (electrostatic discharge) sensitive device. Electrostatic charges as high as 4000 V readily accumulate on the human body and test equipment and can discharge without detection. Although the AD7943/AD7945/AD7948 feature proprietary ESD protection circuitry, permanent damage may occur on devices subjected to high energy electrostatic discharges. Therefore, proper ESD precautions are recommended to avoid performance degradation or loss of functionality.

ORDERING GUIDE

Model	Temperature Range	Linearity Error (LSBs)	Nominal Supply Voltage	Package Option[1]
AD7943BN	–40°C to +85°C	±0.5	+5 V	N-16
AD7943BR	–40°C to +85°C	±0.5	+5 V	R-16
AD7943BRS	–40°C to +85°C	±0.5	+5 V	RS-20
AD7943AN-B	–40°C to +85°C	±1	+3.3 V to +5 V	N-16
AD7943ARS-B	–40°C to +85°C	±1	+3.3 V to +5 V	RS-20
AD7945BN	–40°C to +85°C	±0.5	+5 V	N-20
AD7945BR	–40°C to +85°C	±0.5	+5 V	R-20
AD7945BRS	–40°C to +85°C	±0.5	+5 V	RS-20
AD7945AN-B	–40°C to +85°C	±1	+3.3 V to +5 V	N-20
AD7945ARS-B	–40°C to +85°C	±1	+3.3 V to +5 V	RS-20
AD7945TQ	–55°C to +125°C	±1	+5 V	Q-20
AD7948BN	–40°C to +85°C	±0.5	+5 V	N-20
AD7948BR	–40°C to +85°C	±0.5	+5 V	R-20
AD7948BRS	–40°C to +85°C	±0.5	+5 V	RS-20
AD7948AN-B	–40°C to +85°C	±1	+3.3 V to +5 V	N-20
AD7948ARS-B	–40°C to +85°C	±1	+3.3 V to +5 V	RS-20

NOTE
[1]N = Plastic DIP; R = SOP (Small Outline Package); RS = SSOP (Shrink Small Outline Package); Q = Cerdip.

TERMINOLOGY

Relative Accuracy

Relative Accuracy or endpoint linearity is a measure of the maximum deviation from a straight line passing through the endpoints of the DAC transfer function. It is measured after adjusting for zero error and full-scale error and is normally expressed in Least Significant Bits or as a percentage of full-scale reading.

Differential Nonlinearity

Differential nonlinearity is the difference between the measured change and the ideal 1 LSB change between any two adjacent codes. A specified differential nonlinearity of 1 LSB maximum ensures monotonicity.

Gain Error

Gain Error is a measure of the output error between an ideal DAC and the actual device output. It is measured with all 1s in the DAC after offset error has been adjusted out and is expressed in Least Significant Bits. Gain error is adjustable to zero with an external potentiometer.

Output Leakage Current

Output leakage current is current which flows in the DAC ladder switches when these are turned off. For the I_{OUT1} terminal, it can be measured by loading all 0s to the DAC and measuring the I_{OUT1} current. Minimum current will flow in the I_{OUT2} line when the DAC is loaded with all 1s.

Output Capacitance

This is the capacitance from the I_{OUT1} pin to AGND.

Output Voltage Settling Time

This is the amount of time it takes for the output to settle to a specified level for a full-scale input change. For these devices, it is specified both with the AD843 as the output op amp in the normal current mode and with the AD820 in the biased current mode.

Digital to Analog Glitch Impulse

This is the amount of charge injected into the analog output when the inputs change state. It is specified as the area of the glitch in nV-s. It is measured with the reference input connected to AGND and the digital inputs toggled between all 1s and all 0s. As with Settling Time, it is specified with both the AD817 and the AD820.

AC Feedthrough Error

This is the error due to capacitive feedthrough from the DAC reference input to the DAC I_{OUT1} terminal, when all 0s are loaded in the DAC.

Digital Feedthrough

When the device is not selected, high frequency logic activity on the device digital inputs is capacitively coupled through the device to show up as noise on the I_{OUT1} pin and subsequently on the op amp output. This noise is digital feedthrough.

PIN CONFIGURATIONS

DIP/SOP

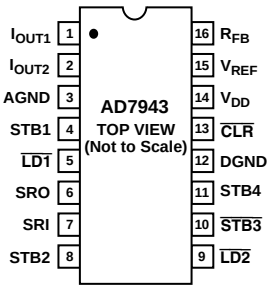

SSOP

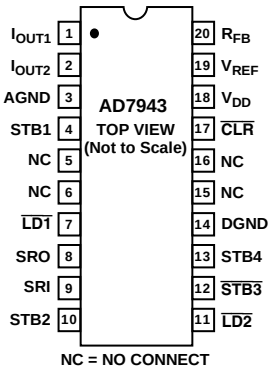

DIP/SOP/SSOP

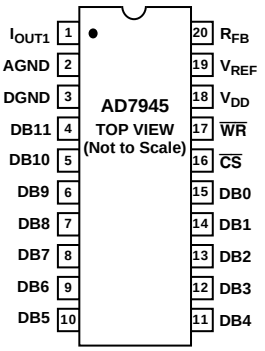

DIP/SOP/SSOP

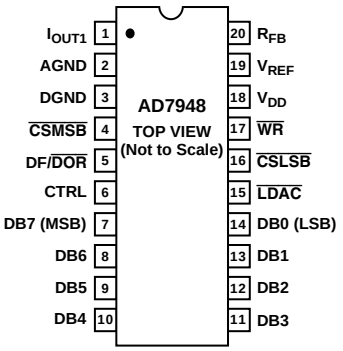

AD7943 PIN FUNCTION DESCRIPTIONS

Pin Mnemonic	Description
I_{OUT1}	DAC current output terminal 1.
I_{OUT2}	DAC current output terminal 2. This should be connected to the AGND pin.
AGND	This pin connects to the back gates of the current steering switches. In normal operation, it should be connected to the signal ground of the system. In biased single-supply operation it may be biased to some voltage between 0 V and the 1.23 V. See Figure 11 for more details.
STB1	This is the Strobe 1 input. Data is clocked into the input shift register on the rising edge of this signal. $\overline{STB3}$ must be high. STB2, STB4 must be low.
$\overline{LD1}$, $\overline{LD2}$	Active low inputs. When both of these are low, the DAC register is updated and the output will change to reflect this.
SRI	Serial Data Input. Data on this line will be clocked into the input shift register on one of the Strobe inputs, when they are enabled.
STB2	This is the Strobe 2 input. Data is clocked into the input shift register on the rising edge of this signal. $\overline{STB3}$ must be high. STB1, STB4 must be low.
$\overline{STB3}$	This is the Strobe 3 input. Data is clocked into the input shift register on the falling edge of this signal. STB1, STB2, STB4, must be low.
STB4	This is the Strobe 4 input. Data is clocked into the input shift register on the rising edge of this signal. $\overline{STB3}$ must be high. STB1, STB2 must be low.
DGND	Digital Ground.
$\overline{CLR}$	Asynchronous CLR input. When this input is taken low, all 0s are loaded to the DAC latch.
V_{DD}	Power supply input. This is nominally +5 V for Normal Mode Operation and +3.3 V to +5 V for Biased Mode Operation.
V_{REF}	DAC reference input.
R_{FB}	DAC feedback resistor pin.

AD7945 PIN FUNCTION DESCRIPTIONS

Pin Mnemonic	Description
I_{OUT1}	DAC current output terminal 1.
AGND	This pin connects to the back gates of the current steering switches. The DAC I_{OUT2} terminal is also connected internally to this point.
DGND	Digital Ground.
DB11–DB0	Digital Data Inputs.
$\overline{CS}$	Active Low, Chip Select Input.
$\overline{WR}$	Active Low, Write Input.
V_{DD}	Power supply input. This is nominally +5 V for Normal Mode Operation and +3.3 V to +5 V for Biased Mode Operation.
V_{REF}	DAC reference input.
R_{FB}	DAC feedback resistor pin.

AD7948 PIN FUNCTION DESCRIPTIONS

Pin Mnemonic	Description
I_{OUT1}	DAC current output terminal 1. Normally terminated at the virtual ground of output amplifier.
AGND	Analog Ground Pin. This pin connects to the back gates of the current steering switches. The DAC I_{OUT2} terminal is also connected internally to this point.
DGND	Digital Ground Pin.
$\overline{CSMSB}$	Chip Select Most Significant Byte. Active Low Input. Used in combination with $\overline{WR}$ to load external data into the input register or in combination with $\overline{LDAC}$ and $\overline{WR}$ to load external data into both input and DAC registers.
DF/$\overline{DOR}$	Data Format/Data Override. When this input is low, data in the DAC register is forced to one of two override codes selected by CTRL. When the override signal is removed, the DAC output returns to reflect the value in the DAC register. With DF/$\overline{DOR}$ high, CTRL selects either a left or right justified input data format. For normal operation, DF/$\overline{DOR}$ is held high. See Table I.

Table I. Truth Table for DF/$\overline{DOR}$ CTRL

DF/$\overline{DOR}$	CTRL	Function
0	0	DAC Register Contents Overridden by All 0s
0	1	DAC Register Contents Overridden by All 1s
1	0	Left-Justified Input Data Selected
1	1	Right-Justified Input Data Selected

CTRL	Control Input. See DF/$\overline{DOR}$ description.
DB7–DB0	Digital Data Inputs.
$\overline{LDAC}$	Load DAC input, active low. This signal, in combination with others, is used to load the DAC register from either the input register or the external data bus.
$\overline{CSLSB}$	Chip Select Least Significant (LS) Byte. Active Low Input. Used in combination with $\overline{WR}$ to load external data into the input register or in combination with $\overline{WR}$ and $\overline{LDAC}$ to load external data into both input and DAC registers.

Table II. Truth Table for AD7948 Write Operation

$\overline{WR}$	$\overline{CSMSB}$	$\overline{CSLSB}$	$\overline{LDAC}$	Function
0	1	0	1	Load LS Byte to Input Register
0	1	0	0	Load LS Byte to Input Register and DAC Register
0	0	1	1	Load MS Byte to Input Register
0	0	1	0	Load MS Byte to Input Register and DAC Register
0	1	1	0	Load Input Register to DAC Register
1	X	X	X	No Data Transfer

$\overline{WR}$	Write input, active low. This active low signal, in combination with others is used in loading external data into the AD7948 input register and in transferring data from the input register to the DAC register.
V_{DD}	Power supply input. This is nominally +5 V for Normal Mode Operation and +3.3 V to +5 V for Biased Mode Operation.
V_{REF}	DAC reference input.
R_{FB}	DAC feedback resistor pin.

Typical Performance Curves

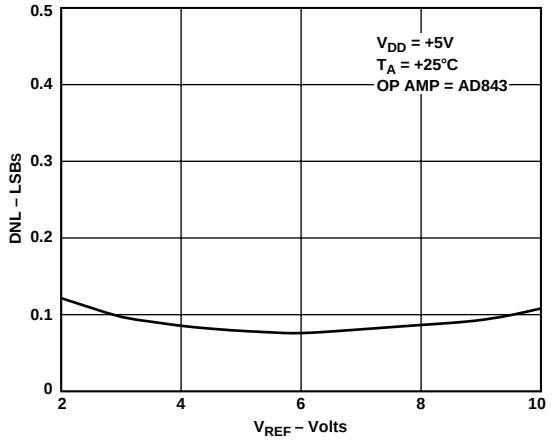

Figure 5. Differential Nonlinearity Error vs. V_{REF} (Normal Mode)

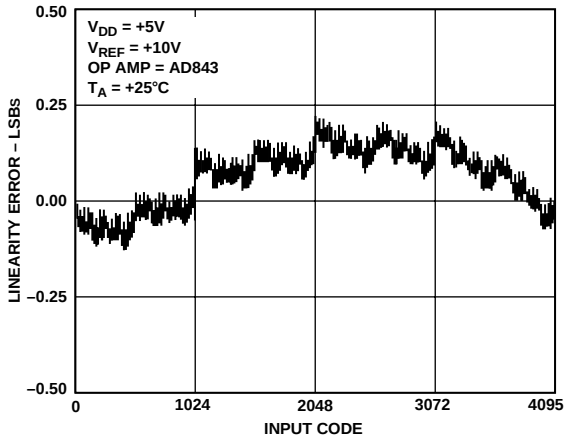

Figure 7. All Codes Linearity In Normal Mode (V_{DD} = +5 V)

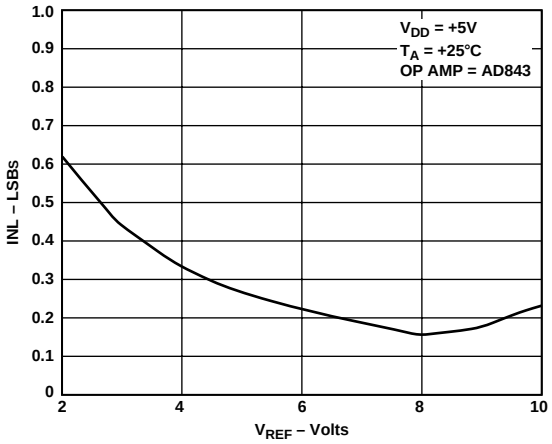

Figure 6. Integral Nonlinearity Error vs. V_{REF} (Normal Mode)

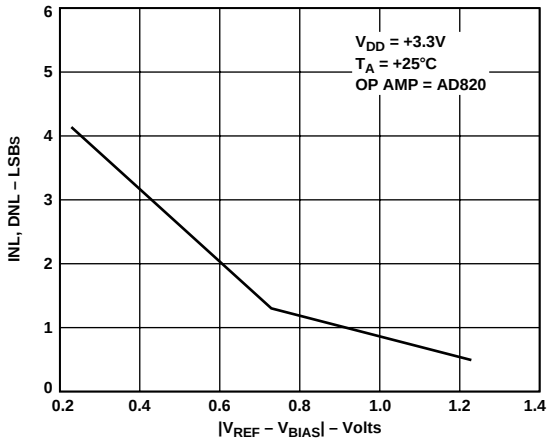

Figure 8. Linearity Error vs. V_{REF} (Biased Mode)

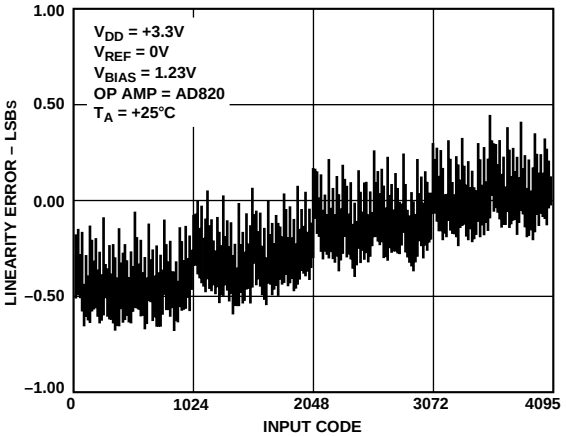

Figure 9. All Codes Linearity in Biased Mode (V_{DD} = +3.3 V)

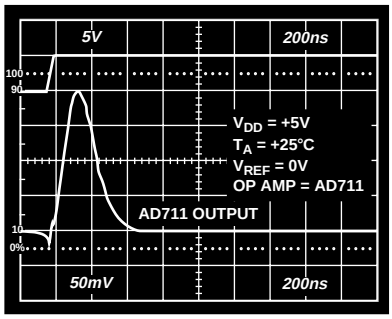

Figure 11. Digital-to-Analog Glitch Impulse

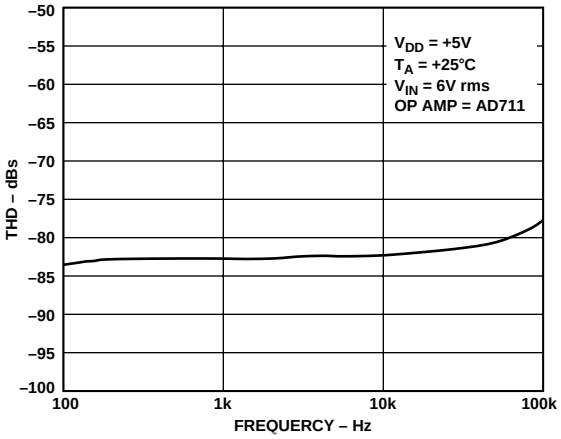

Figure 10. Total Harmonic Distortion vs. Frequency

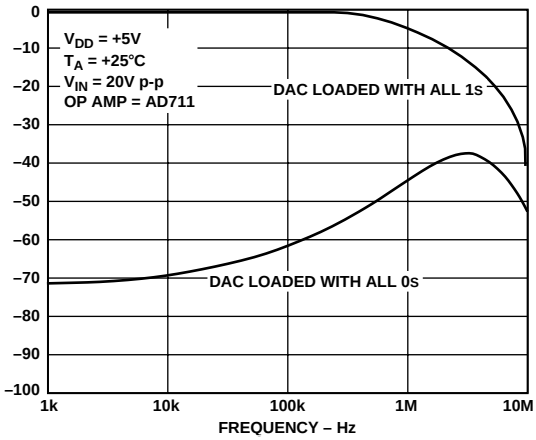

Figure 12. Multiplying Frequency Response vs. Digital Code

GENERAL DESCRIPTION

D/A Section

The AD7943, AD7945 and AD7948 are 12-bit current-output D/A converters. A simplified circuit diagram is shown in Figure 13. The DAC architecture is segmented. This means that the 2 MSBs of the 12-bit data word are decoded to drive the three switches A, B and C. The remaining 10 bits of the data word drive the switches S0 to S9 in a standard inverting R-2R ladder configuration.

Each of the switches A to C steers 1/4 of the total reference current into either I_{OUT1} or I_{OUT2} with the remaining 1/4 of the total current passing through the R-2R section. Switches S9 to S0 steer binarily weighted currents into either I_{OUT1} or I_{OUT2}. If I_{OUT1} and I_{OUT2} are kept at the same potential, a constant current flows in each ladder leg, regardless of digital input code. Thus, the input resistance seen at V_{REF} is always constant. It is equal to R/2. The V_{REF} input may be driven by any reference voltage or current, ac or dc that is within the Absolute Maximum Ratings.

The device provides access to the V_{REF}, R_{FB}, and I_{OUT1} terminals of the DAC. This makes the device extremely versatile and allows it to be configured in several different operating modes. Examples of these are shown in the following sections. The AD7943 also has a separate I_{OUT2} pin. In the AD7945 and AD7948 this is internally tied to AGND.

When an output amplifier is connected in the standard configuration of Figure 14, the output voltage is given by:

$$V_{OUT} = -D \times V_{REF}$$

where D is the fractional representation of the digital word loaded to the DAC. D can be set from 0 to 4095/4096, since it has 12-bit resolution.

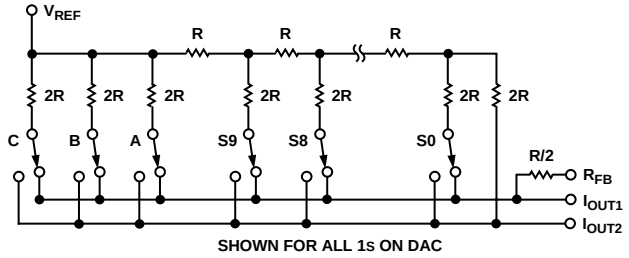

Figure 13. Simplified D/A Circuit Diagram

UNIPOLAR BINARY OPERATION

(Two-Quadrant Multiplication)

Figure 14 shows the standard unipolar binary connection diagram for the AD7943, AD7945 and AD7948. When V_{IN} is an ac signal, the circuit performs two-quadrant multiplication. Resistors R1 and R2 allow the user to adjust the DAC gain error. With a specified gain error of 2 LSBs over temperature, these are not necessary in many applications. Circuit offset is due completely to the output amplifier offset. It can be removed by adjusting the amplifier offset voltage. Alternatively, choosing a low offset amplifier makes this unnecessary.

A1 should be chosen to suit the application. For example, the OP07 is ideal for very low bandwidth applications (10 kHz or lower) while the AD711 is suitable for medium bandwidth applications (200 kHz or lower). For high bandwidth applications of greater than 200 kHz, the AD843 and AD847 offer very fast settling times.

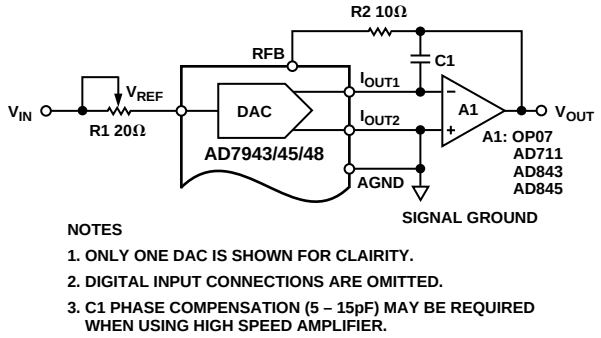

Figure 14. Unipolar Binary Operation

The code table for Figure 14 is shown in Table III.

Table III. Unipolar Binary Code

Digital Input MSB LSB	Analog Output (V_{OUT} as Shown in Figure 14)
1111 1111 1111	$-V_{REF}$ (4095/4096)
1000 0000 0001	$-V_{REF}$ (2049/4096)
1000 0000 0000	$-V_{REF}$ (2048/4096)
0111 1111 1111	$-V_{REF}$ (2047/4096)
0000 0000 0001	$-V_{REF}$ (1/4096)
0000 0000 0000	$-V_{REF}$ (0/4096) = 0

NOTE
Nominal LSB size for the circuit of Figure 14 is given by: V_{REF} (1/4096).

BIPOLAR OPERATION
(Four-Quadrant Multiplication)

Figure 15 shows the standard connection diagram for bipolar operation of the AD7943, AD7945 and AD7948. The coding is offset binary as shown in Table IV. When V_{IN} is an ac signal, the circuit performs four-quadrant multiplication. Resistors R1 and R2 are for gain error adjustment and are not needed in many applications where the device gain error specifications are adequate. To maintain the gain error specifications, resistors R3, R4 and R5 should be ratio matched to 0.01%.

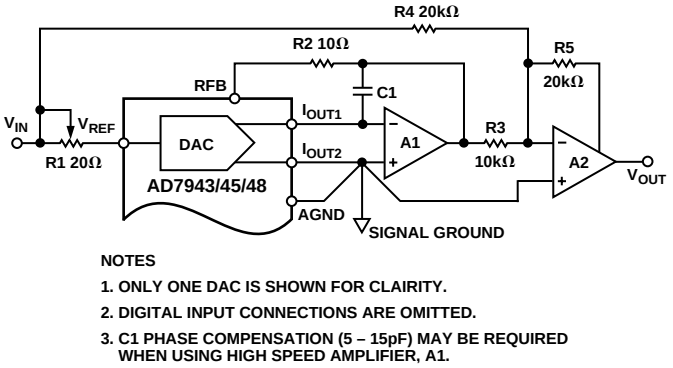

Figure 15. Bipolar Operation (Four-Quadrant Multiplication)

Suitable dual amplifiers for use with Figure 15 are the OP270 (low noise, low bandwidth, 15 kHz), the AD712 (medium bandwidth, 200 kHz) or the AD827 (wide bandwidth, 1 MHz).

Table IV. Bipolar (Offset Binary) Code

Table Digital Input MSB LSB	Analog Output (V_{OUT} as Shown in Figure 15)
1111 1111 1111	$+V_{REF}$ (2047/2048)
1000 0000 0001	$+V_{REF}$ (1/2048)
1000 0000 0000	$+V_{REF}$ (0/2048) = 0
0111 1111 1111	$-V_{REF}$ (1/2048)
0000 0000 0001	$-V_{REF}$ (2047/2048)
0000 0000 0000	$-V_{REF}$ (2048/2048) = $-V_{REF}$

NOTE
Nominal LSB size for the circuit of Figure 15 is given by: V_{REF} (1/2048).

SINGLE SUPPLY APPLICATIONS

The "-B" versions of the devices are specified and tested for single supply applications. Figure 16 shows the recommended circuit for operation with a single +5 V to +3.3 V supply. The I_{OUT2} and AGND terminals are biased to 1.23 V. Thus, with 0 V applied to the V_{REF} terminal, the output will go from 1.23 V (all 0s loaded to the DAC) to 2.46 V (all 1s loaded). With 2.45 V applied to the V_{REF} terminal, the output will go from 1.23 V (all 0s loaded) to 0.01 V (all 1s loaded). It is important when considering INL in a single-supply system to realize that most single-supply amplifiers cannot sink current and maintain zero volts at the output. In Figure 16, with V_{REF} = 2.45 V the required sink current is 200 µA. The minimum output voltage level is 10 mV. Op amps like the OP295 are capable of maintaining this level while sinking 200 µA.

Figure 16 shows the I_{OUT2} and AGND terminals being driven by an amplifier. This is to maintain the bias voltage at 1.23 V as the impedance seen looking into the I_{OUT2} terminal changes. This impedance is code dependent and varies from infinity (all 0s loaded in the DAC) to about 6 kΩ minimum. The AD589 has a typical output resistance of 0.6 Ω and it can be used to drive the terminals directly. However, this will cause a typical linearity degradation of 0.2 LSBs. If this is unacceptable then the buffer amplifier is necessary. Figure 9 shows the typical linearity performance of the AD7943/AD7945/AD7948 when used as in Figure 16 with V_{DD} set at +3.3 V and V_{REF} = 0 V.

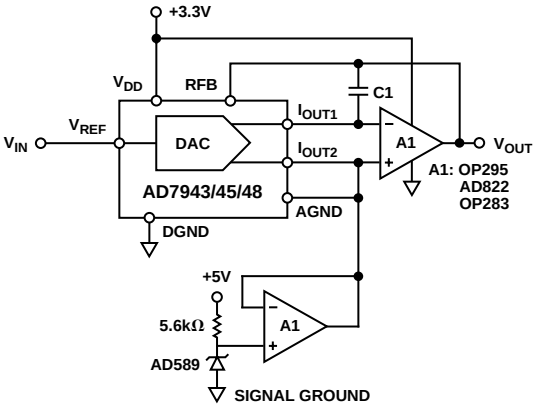

Figure 16. Single Supply System

MICROPROCESSOR INTERFACING

AD7943 to ADSP-2101 Interface

Figure 17 shows the AD7943 to ADSP-2101 interface diagram. The DSP is set up for alternate inverted framing with an internally generated SCLK. TFS from the ADSP-2101 drives the STB1 input on the AD7943. The serial word length should be set at 12. This is done by making SLEN = 11 (1011 binary). The SLEN field is Bits 3–0 in the SPORT control register (0x3FF6 for SPORT0 and 0x3FF2 for SPORT1).

With the 16 MHz version of the ADSP-2101, the maximum output SCLK is 8 MHz. The AD7943 setup and hold time of 10 ns and 25 ns mean that it is compatible with the DSP when running at this speed.

The OUTPUT FLAG drives both $\overline{LD1}$ and $\overline{LD2}$ and is brought low to update the DAC register and change the analog output.

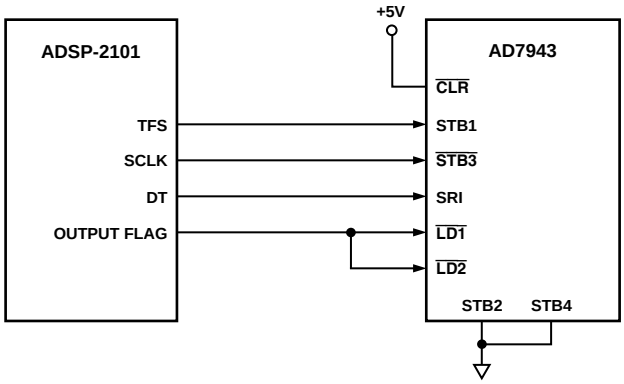

Figure 17. AD7943 to ADSP-2101 Interface

AD7943 to DSP56001 Interface

Figure 18 shows the interface diagram for the AD7943 to the DSP56001. The DSP56001 is configured for normal mode synchronous operation with gated clock. The serial clock, SCK, is set up as an output from the DSP and the serial word length is set for 12 bits (WL0 = 1, WL1 = 0, in Control Register A). SCK from the DSP56001 is applied to the AD7943 $\overline{STB3}$ input. Data from the DSP56000 is valid on the falling edge of SCK and this is the edge which clocks the data into the AD7943 shift register. STB1, STB2 and STB4 are tied low on the AD7943 to permanently enable the $\overline{STB3}$ input.

When the 12-bit serial word has been written to the AD7943, the $\overline{LD1}$, $\overline{LD2}$ inputs are brought low to update the DAC register.

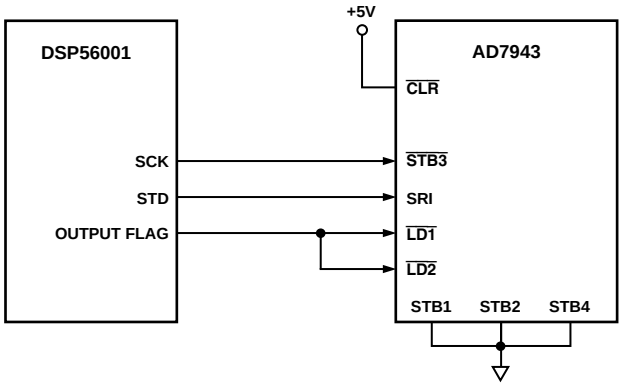

Figure 18. AD7943 to DSP56001 Interface

AD7945 to MC68000 Interface

Figure 19 shows the MC68000 interface to the AD7945. The appropriate data is written into the DAC in one MOVE instruction to the appropriate memory location.

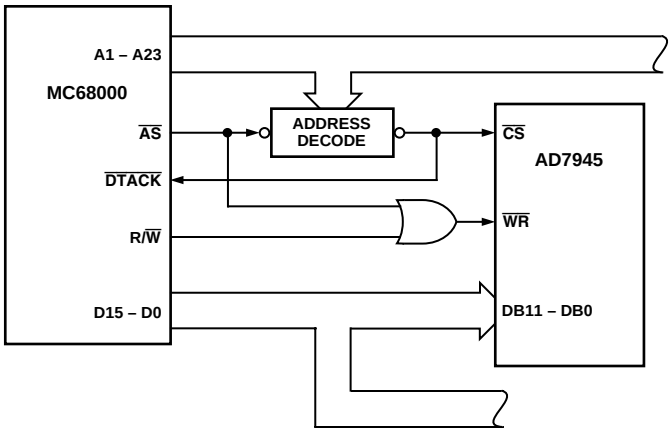

Figure 19. AD7945 to MC68000 Interface

AD7948 to Z80 Interface

Figure 20 is the interface between the AD7948 and the 8-bit bus of the Z80 processor. Three write operations are needed to load the DAC. The first two load the MS byte and the LS byte and the third brings the $\overline{LDAC}$ low to update the output.

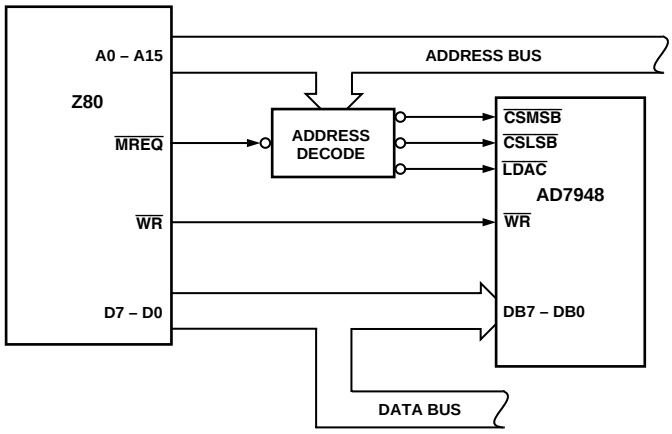

Figure 20. AD7948 to Z80 Interface

OUTLINE DIMENSIONS

Dimensions shown in inches and (mm).

16-Lead Plastic DIP (N-16)

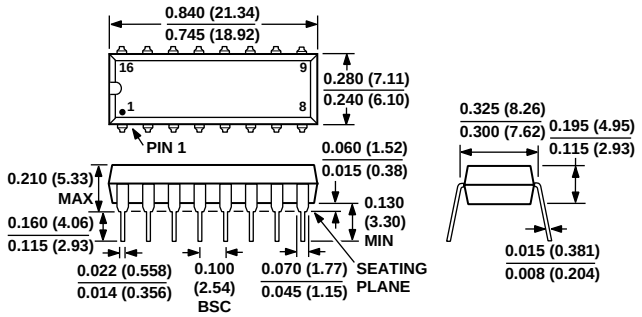

16-Lead SOP (R-16)

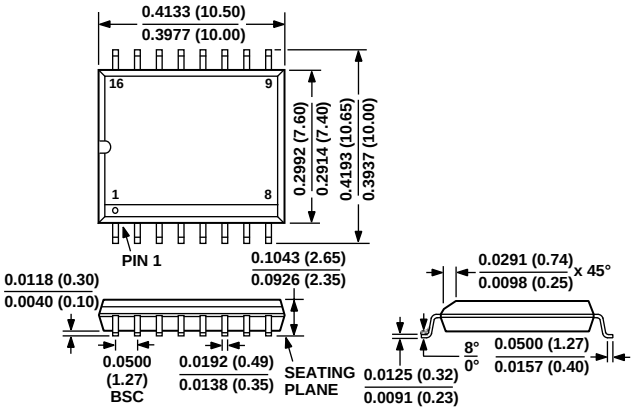

20-Lead Plastic DIP (N-20)

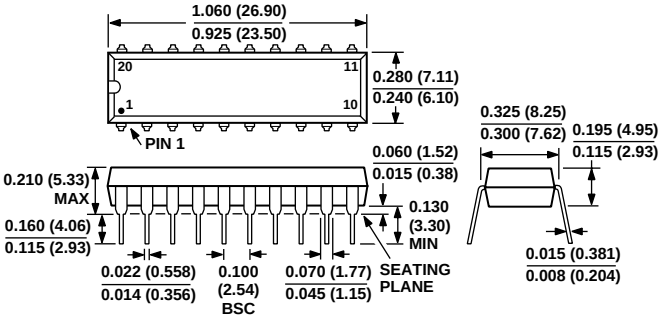

20-Lead Cerdip (Q-20)

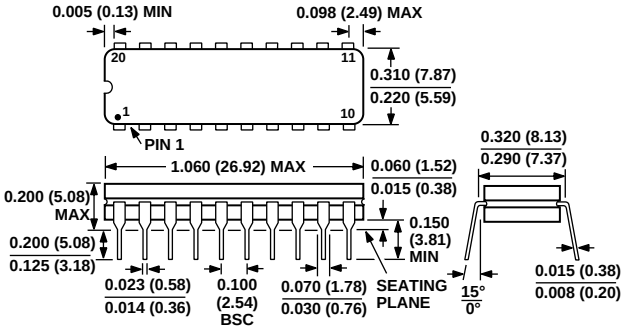

20-Lead SOP (R-20)

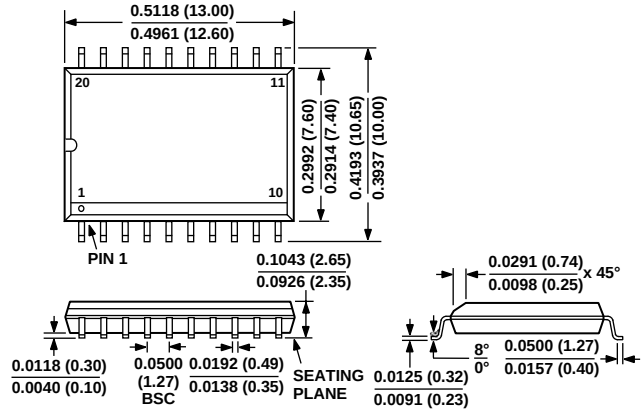

20-Lead SSOP (RS-20)

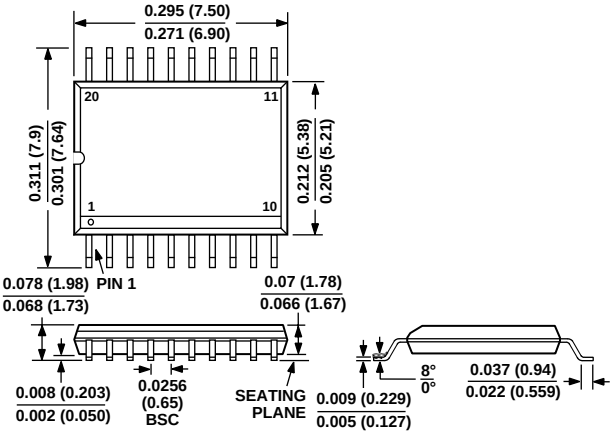

C1901b–0–5/98

PRINTED IN U.S.A.

Компания «ЭлектроПласт» предлагает заключение долгосрочных отношений при поставках импортных электронных компонентов на взаимовыгодных условиях!

Наши преимущества:

- Оперативные поставки широкого спектра электронных компонентов отечественного и импортного производства напрямую от производителей и с крупнейших мировых складов;
- Поставка более 17-ти миллионов наименований электронных компонентов;
- Поставка сложных, дефицитных, либо снятых с производства позиций;
- Оперативные сроки поставки под заказ (от 5 рабочих дней);
- Экспресс доставка в любую точку России;
- Техническая поддержка проекта, помощь в подборе аналогов, поставка прототипов;
- Система менеджмента качества сертифицирована по Международному стандарту ISO 9001;
- Лицензия ФСБ на осуществление работ с использованием сведений, составляющих государственную тайну;
- Поставка специализированных компонентов (Xilinx, Altera, Analog Devices, Intersil, Interpoint, Microsemi, Aeroflex, Peregrine, Syfer, Eurofarad, Texas Instrument, Miteq, Cobham, E2V, MA-COM, Hittite, Mini-Circuits,General Dynamics и др.);

Помимо этого, одним из направлений компании «ЭлектроПласт» является направление «Источники питания». Мы предлагаем Вам помощь Конструкторского отдела:

- Подбор оптимального решения, техническое обоснование при выборе компонента;
- Подбор аналогов;
- Консультации по применению компонента;
- Поставка образцов и прототипов;
- Техническая поддержка проекта;
- Защита от снятия компонента с производства.

Как с нами связаться

Телефон: 8 (812) 309 58 32 (многоканальный)
Факс: 8 (812) 320-02-42
Электронная почта: org@eplast1.ru
Адрес: 198099, г. Санкт-Петербург, ул. Калинина, дом 2, корпус 4, литера А.