NTC thermistors for inrush current limiting

Leaded and coated disks, P27 series

Series/Type: **B57127P0***M301**

Date: July 2019

© TDK Electronics AG 2019. Reproduction, publication and dissemination of this publication, enclosures hereto and the information contained therein without TDK Electronics' prior express consent is prohibited.

Applications

- Inrush current limiting, e.g. in switch-mode power supplies, soft-start motors

Features

- Leaded and coated NTC thermistors
- Tinned copper wire, kinked
- Coating material flame retardant to UL 94 V-0
- Component marking includes the manufacturer's logo, resistance value and date code
- Highly stable electrical characteristics

Approvals

- UL 1434 (file number E69802)

Options

Resistance tolerance <20% and alternative lead configurations available on request

Delivery mode

Bulk

Dimensional drawing

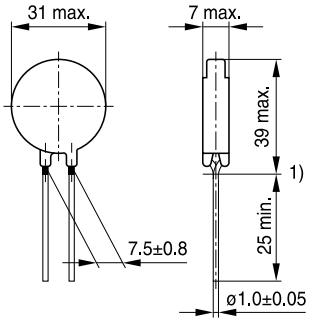

1) Seating plane to IEC 60717

ICL0046-M-E

Dimensions in mm
Approx. weight 10 g

General technical data

Climatic category	(IEC 60068-1)		55/170/21	
Max. power	(at 25 °C)	P_{max}	10.0	W
Resistance tolerance		$\Delta R_R/R_R$	±20	%
Rated temperature		T_R	25	°C
Dissipation factor	(in air)	δ_{th}	approx. 50	mW/K
Thermal cooling time constant	(in air)	τ_c	approx. 200	s
Heat capacity		C_{th}	approx. 10000	mJ/K

Electrical specification and ordering codes

R_{25} Ω	I_{test} A	I_{max} (0 ... 25 °C) A	C_{test} 1) 280 V AC µF	C_{test} 1) 240 V AC µF	C_{test} 1) 120 V AC µF	Maximum energy J	R_{min} (@ I_{test}, 25 °C) Ω	Ordering code
0.5	30	24	1300	3500	16000	200	0.011	B57127P0508M301
1	30	22	1300	3500	16000	200	0.013	B57127P0109M301
2	23	16	1300	3500	16000	200	0.022	B57127P0209M301
5	20	12	1300	3500	16000	200	0.033	B57127P0509M301
7	17	11	1300	3500	16000	200	0.045	B57127P0709M301
10	15	9	1300	3500	16000	200	0.058	B57127P0100M301

1) For details on the capacitance C_{test} please refer to "Application notes", chapter 1.6.

Reliability data

Test	Standard	Test conditions	$\Delta R_{25}/R_{25}$ (typical)	Remarks
Storage in dry heat	IEC 60068-2-2	Storage at upper category temperature T: 170 °C t: 1000 h	< 20%	No visible damage
Storage in damp heat, steady state	IEC 60068-2-78	Temperature of air: 40 °C Relative humidity of air: 93% Duration: 21 days	< 20%	No visible damage
Thermal schock	IEC 60068-2-14	Lower test temperature: −55 °C t: 30 min Upper test temperature: 170 °C t: 30 min Time to change from lower to upper temperature: < 30 s Number of cycles: 10	< 20%	No visible damage
Endurance	IEC 60539-1	Ambient temperature: 25 ±5 °C $I = I_{max}$ t: 1000 h	< 20%	No visible damage
High current endurance		Ambient temperature: 25 ±5 °C $I = I_{test}$ t: 50 h	< 20%	No visible damage
Cyclic endurance	IEC 60539-1	Ambient temperature: 25 ±5 °C $I = I_{max}$ On-time = 1 min Cooling time = 5 min Number of cycles: 1000	< 20%	No visible damage
Maximum permissible capacitance test	IEC 60539-1	Ambient temperature: 25 ±5 °C Capacitance = C_{test} Number of cycles: 1000	< 20%	No visible damage

Note

- The self-heating of a thermistor during operation depends on the load applied and the applicable dissipation factor.
- When loaded with maximum allowable current/power and the specified dissipation factor is taken as a basis, the NTC thermistor may reach a mean temperature of up to 250 °C.
- The heat developed during operation will also be dissipated through the lead wires. So the contact areas, too, may become quite hot at maximum load.
- When mounting NTC thermistors you have to ensure that there is an adequate distance between the thermistor and all parts which are sensitive to heat or combustible.

Resistance versus temperature

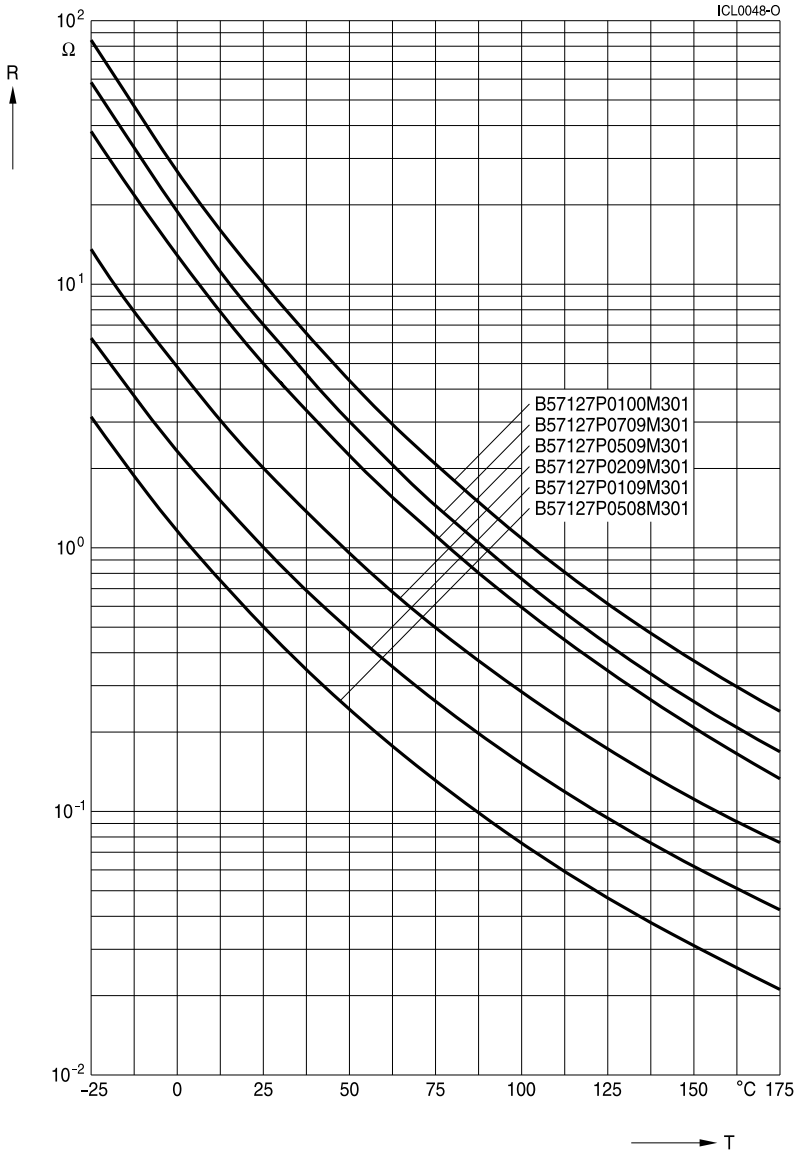

P27 series

Resistance versus current

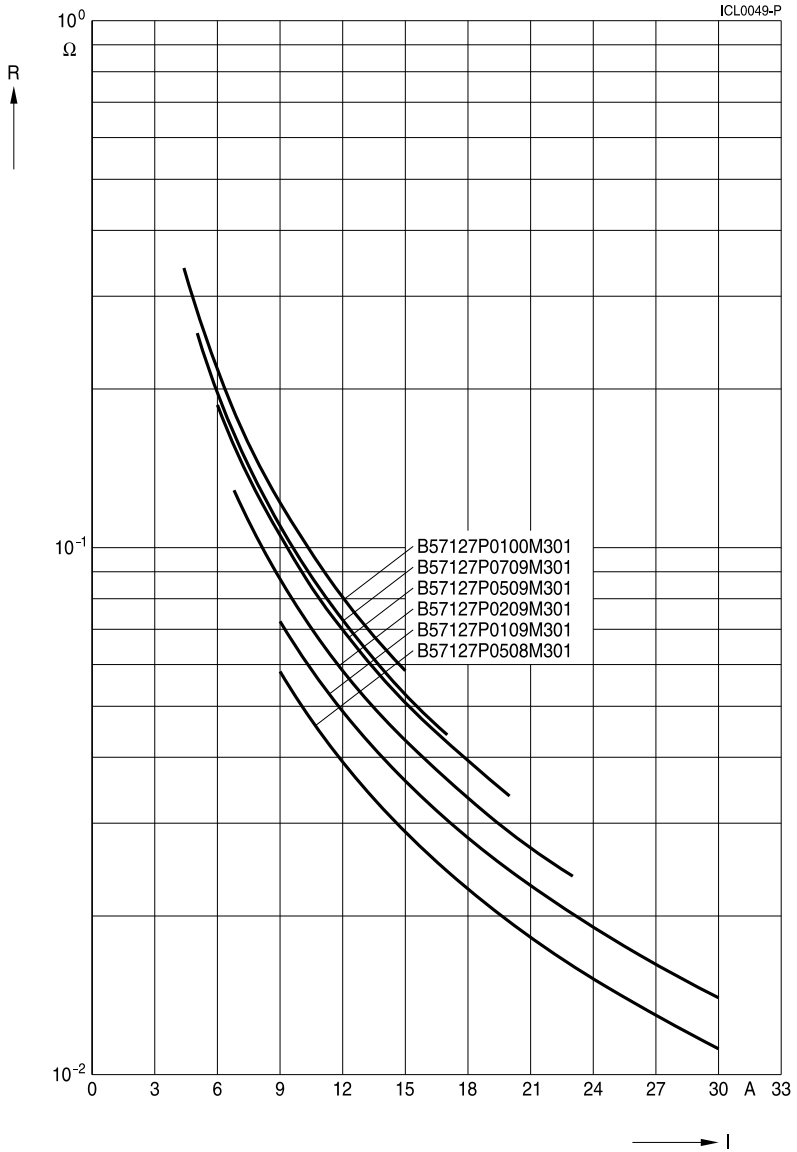

P27 series

Application notes

The following two important aspects for determining the right NTC inrush current limiter are excerpted from the chapter "Application notes" in the "NTC Inrush Current Limiters, Data book". The complete application note can be downloaded from www.tdk-electronics.tdk.com/en/ntcicl_appnotes.

1.4 Load derating

The power handling capability of an NTC thermistor cannot be fully utilized over the entire temperature range. For circuit dimensioning the derating curve given below provides information on the extent to which the current must be reduced at a certain ambient temperature (T_A).

Derating curve for types S237, P11 and P13

Figure 1

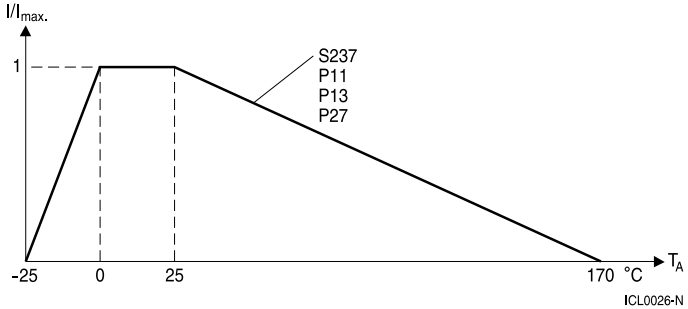

$$\text{Percent of } I_{max} = 100 \left[1 - \frac{T_A - 25\ °C}{T_{max} - 25\ °C}\right]$$

T_A = Ambient temperature > 25 °C

T_{max} = 170 °C

Derating curve for types S153, S235, S236, S238, S364 and S464

Figure 2

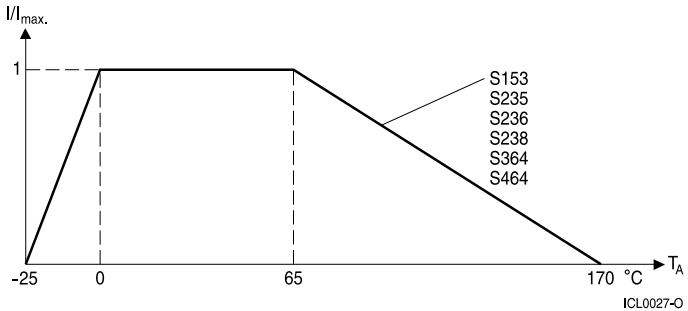

$$\text{Percent of } I_{max} = 100 \left[1 - \frac{T_A - 65\ °C}{T_{max} - 65\ °C}\right]$$

T_A = Ambient temperature > 65 °C

T_{max} = 170 °C

The I_{max} values specified in the data sheets denote the maximum permissible continuous current (DC or RMS values for sine-shaped AC) in the temperature range 0 °C to 65 °C.

1.6 Maximum permissible capacitance

The currents during turn-on are much higher than the rated currents during continuous operation. To test the effects of these current surges TDK Electronics uses the following standard procedure according to IEC 60539-1:

Figure 3

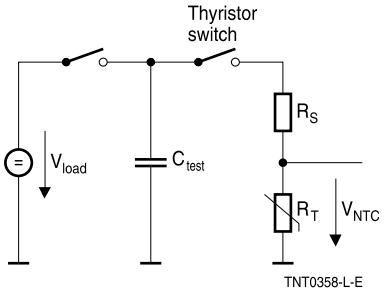

Test circuit for evaluating the maximum permissible capacitance of an NTC thermistor

V_{load}	Load voltage [V]
C_{test}	Test capacitance [µF]
R_S	Series resistance [R_S = 1 Ω]
V_{NTC}	Voltage drop across the NTC under test [V]

The capacitor C_{test} is discharged via the series resistor R_S and the NTC inrush current limiter. The load voltage is chosen such that the voltage applied to the thermistor at the start of discharge is V_{NTC} = 375 V (corresponds to (230 V + ΔV) · √2).

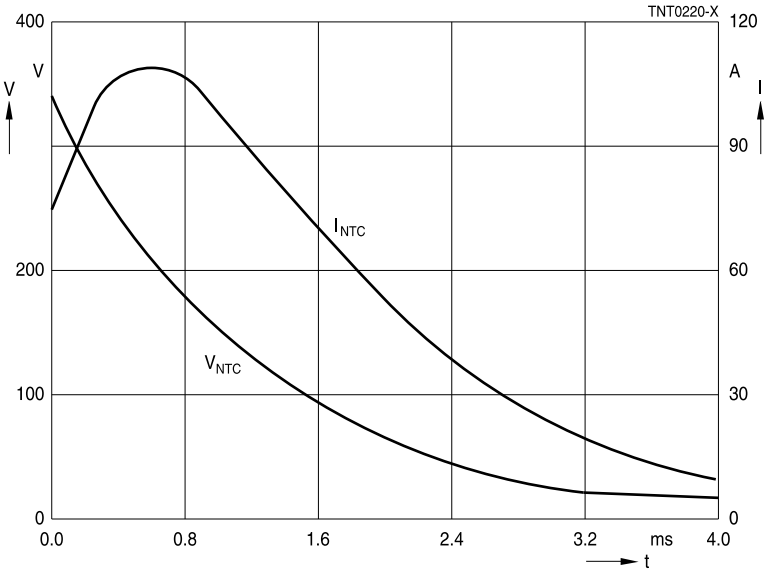

Figure 4
Maximum permissible capacitance discharging test: typical curves

The maximum capacitances that can be switched depend on the individual thermistor type and are given in the data sheets.

Taping and packing

1 Taping of radial leaded ICL NTC thermistors according to the specified lead spacing

Dimensions and tolerances

Lead spacing F = 5.0 mm (taping to IEC 60286-2)
for the following types: S153, S235 and S236

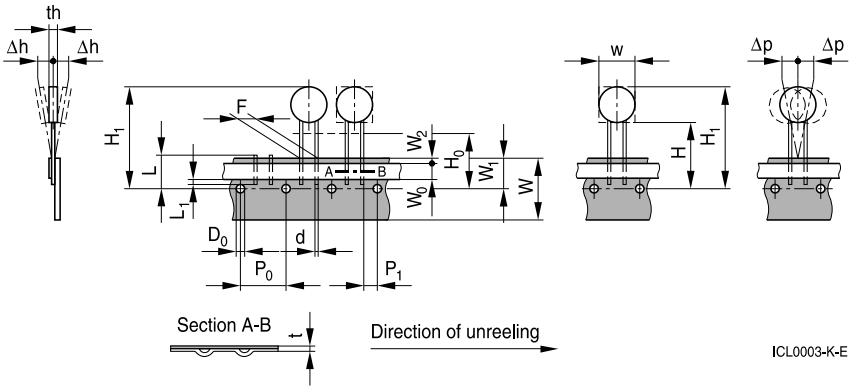

Lead spacing F = 7.5 mm (taping based on IEC 60286-2)
for the following types: P11, P13, S237, S238 and S364

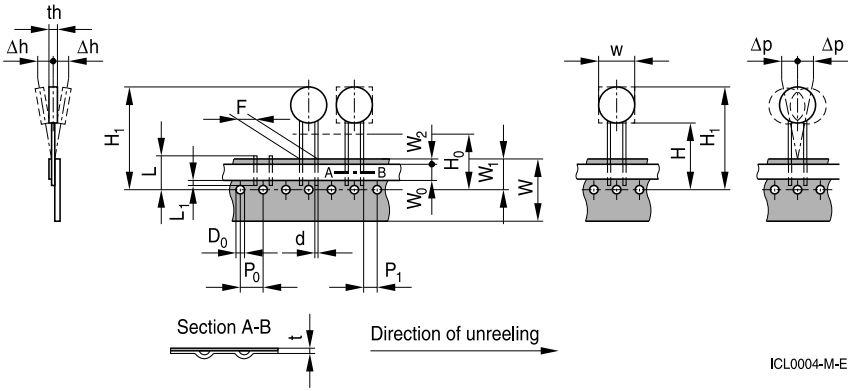

Dimensions (mm)

	Lead spacing 5 mm	Tolerance of lead spacing 5 mm	Lead spacing 7.5 mm	Tolerance of lead spacing 7.5 mm	Remarks
w	≤12.0		≥12.0		please refer to dimensional drawings
th	6.0	max.	7	max.	please refer to dimensional drawings
d	0.5/0.6	±0.05	0.8/1.0	±0.05	please refer to dimensional drawings
P_0	12.7	±0.3	12.7	±0.3	±1 mm / 20 sprocket holes
P_1	3.85	±0.7	8.95	±0.8	
F	5.0	+0.6/−0.1	7.5	±0.8	
Δh	0	±2.0	0	Depends on th	measured at top of component body
Δp	0	±1.3	0	±2.0	
W	18.0	±0.5	18.0	±0.5	
W_0	5.5	min.	11.0	min.	peel-off force ≥5 N
W_1	9.0	+0.75/−0.5	9.0	+0.75/−0.5	
W_2	3.0	max.	3.0	max.	
H	18.0	+2.0/−0	18.0	+2.0/−0	applies only to uncrimped types
H_0	16.0	±0.5	16.0	±0.5	applies only to crimped types
H_1	32.2	max.	45.0	max.	
D_0	4.0	±0.2	4.0	±0.2	
t	0.9	max.	0.9	max.	without wires
L	11.0	max.	11.0	max.	
L_1	4.0	max.	4.0	max.	

Types of packing

Reel packing

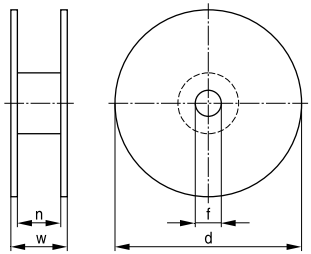

VAR0304-Q

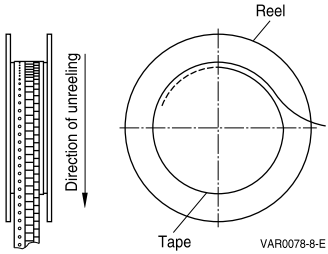

VAR0078-8-E

Reel dimensions (in mm)

Reel type	Series	pcs. per reel	d	f	n	w
I	S153, S235	1500	360 max.	31 ±1	approx. 45	54 max.
I	S236	1000	360 max.	31 ±1	approx. 45	54 max.
II	P11, P13	1500	500 max.	23 ±1	approx. 59	72 max.
II	S237, S238, S364	1000	500 max.	23 ±1	approx. 59	72 max.

Ammo packing

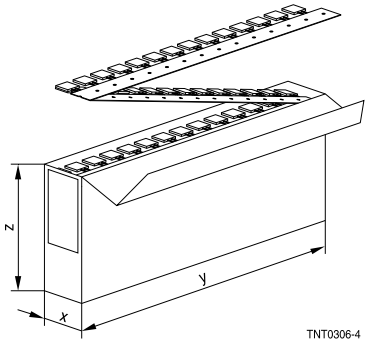

TNT0306-4

Ammo type	Series	pcs. per package	x	y	z
I	S153, S235, S236	1000	45	335	272
II	P11, P13, S237, S238, S364	750	55	340	340

Ammo packing dimensions (in mm)

Bulk packing

The components are packed in cardboard boxes, the size of which depends on the order quantity. Series S464 and P27 is only available as bulk.

Mounting instructions

1 Soldering

1.1 Leaded NTC thermistors

Leaded thermistors comply with the solderability requirements specified by CECC.

When soldering, care must be taken that the NTC thermistors are not damaged by excessive heat. The following maximum temperatures, maximum time spans and minimum distances have to be observed:

	Dip soldering	*Iron soldering*
Bath temperature	max. 260 °C	max. 360 °C
Soldering time	max. 4 s	max. 2 s
Distance from thermistor	min. 6 mm	min. 6 mm

Under more severe soldering conditions the resistance may change.

Solderability (test to IEC 60068-2-20)
Preconditioning: Immersion into flux F-SW 32.
Evaluation criterion: Wetting of soldering areas ≥95%.

Solder	Bath temperature (°C)	Dwell time (s)
SnAg (3.0 ... 4.0), Cu (0.5 ... 0.9)	245 ±3	3

1.1.1 Resistance to soldering heat (test to IEC 60068-2-20)

Preconditioning: Immersion into flux F-SW 32.

Solder	Bath temperature (°C)	Dwell time (s)
SnAg (3.0 ... 4.0), Cu (0.5 ... 0.9)	260 −5	10

1.1.2 Wave soldering

Temperature characteristic at component terminal with dual wave soldering

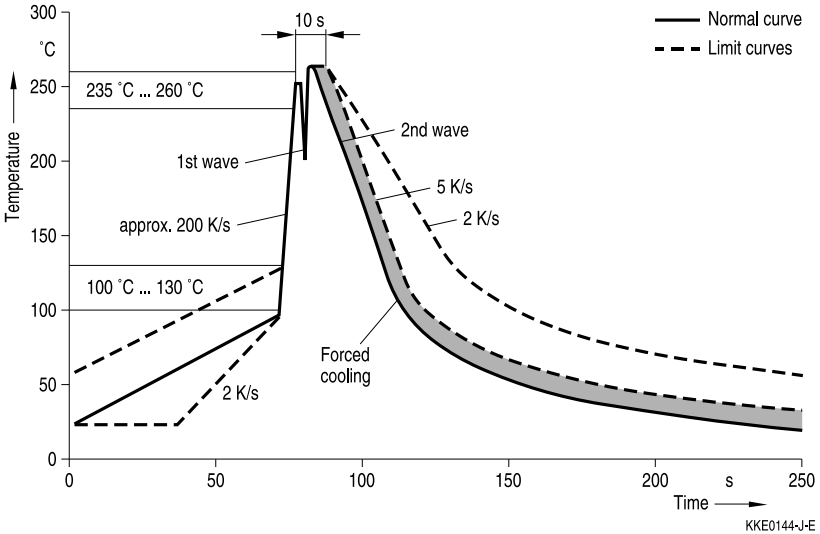

2 Robustness of terminations

The leads meet the requirements of IEC 60068-2-21. They may not be bent closer than 4 mm from the solder joint on the thermistor body or from the point at which they leave the feed-throughs. During bending, any mechanical stress at the outlet of the leads must be removed. The bending radius should be at least 0.75 mm.

Tensile strength: Test Ua1:

Leads	0.50 < ∅ ≤0.80 mm =	10.0 N
	0.80 < ∅ ≤1.25 mm =	20.0 N

Bending strength: Test Ub:

Two 90°-bends in opposite directions at a weight of 0.25 kg.

Torsional strength: Test Uc: severity 2

The lead is bent by 90° at a distance of 6 to 6.5 mm from the thermistor body.

The bending radius of the leads should be approx. 0.75 mm. Two torsions of 180° each (severity 2).

When subjecting leads to mechanical stress, the following should be observed:

Tensile stress on leads

During mounting and operation tensile forces on the leads are to be avoided.

Bending of leads

Bending of the leads directly on the thermistor body is not permissible.

A lead may be bent at a minimum distance of twice the wire's diameter +2 mm from the solder joint on the thermistor body. During bending the wire must be mechanically relieved at its outlet. The bending radius should be at least 0.75 mm.

Twisting of leads

The twisting (torsion) by 180° of a lead bent by 90° is permissible at 6 mm from the bottom of the thermistor body.

3 Sealing and potting

When thermistors are sealed, potted or overmolded, there must be no mechanical stress caused by thermal expansion during the production process (curing / overmolding process) and during later operation. The upper category temperature of the thermistor must not be exceeded. Ensure that the materials used (sealing / potting compound and plastic material) are chemically neutral.

4 Cleaning

If cleaning is necessary, mild cleaning agents such as ethyl alcohol and cleaning gasoline are recommended. Cleaning agents based on water are not allowed. Ultrasonic cleaning methods are permissible.

5 Storage

In order to maintain their solderability, thermistors must be stored in a non-corrosive atmosphere. Humidity, temperature and container materials are critical factors.

The components should be left in the original packing. Touching the metallization of unsoldered thermistors may change their soldering properties.

Storage temperature: −25 °C up to 45 °C

Max. relative humidity (without condensation):

<95%, maximum 30 days per annum

Solder the thermistors listed in this data book after shipment from TDK Electronics within the time specified:

Leaded components: 24 months

Cautions and warnings

General

See "Important notes" on page 2.

Storage

- Store thermistors only in original packaging. Do not open the package before storage.
- Storage conditions in original packaging: storage temperature −25 °C ... +45 °C, relative humidity ≤75% annual mean, maximum 95%, dew precipitation is inadmissible.
- Avoid contamination of thermistors surface during storage, handling and processing.
- Avoid storage of thermistor in harmful environments like corrosive gases (SO_x, Cl etc).
- Solder thermistors after shipment from TDK Electronics within the time specified:
  − Leaded components: 24 months

Handling

- NTC inrush current limiters must not be dropped. Chip-offs must not be caused during handling of NTC inrush current limiters.
- Components must not be touched with bare hands. Gloves are recommended.
- Avoid contamination of thermistor surface during handling.
- In case of exposure of the NTC inrush current limiters to water, electrolytes or other aggressive media, these media can penetrate the coating and reach the surface of the ceramic. Low-ohmic or high-ohmic behavior may occur due to the formation of an electrolyte with metals (silver/lead/tin from metallization or solder). Low-ohmic behavior is caused by electrochemical migration, high-ohmic behavior by dissolving of the electrode. In either case, the functionality of the NTC inrush current limiters can not be assured.
- Washing processes may damage the product due to the possible static or cyclic mechanical loads (e.g. ultrasonic cleaning). They may cause cracks to develop on the product and its parts, which might lead to reduced reliability or lifetime.

Bending / twisting leads

- A lead (wire) may be bent at a minimum distance of twice the wire's diameter plus 4 mm from the component head or housing. When bending ensure the wire is mechanically relieved at the component head or housing. The bending radius should be at least 0.75 mm.
- Twisting (torsion) by 180° of a lead bent by 90° is permissible at 6 mm from the bottom of the thermistor body.

Soldering

- Use resin-type flux or non-activated flux.
- Insufficient preheating may cause ceramic cracks.
- Rapid cooling by dipping in solvent is not recommended.
- Complete removal of flux is recommended.

Mounting

- When NTC inrush current limiters are encapsulated with sealing material or overmolded with plastic material, the precautions given in chapter “Mounting instructions”, “Sealing and potting” must be observed.
- Electrode must not be scratched before/during/after the mounting process.
- Contacts and housings used for assembly with thermistor have to be clean before mounting.
- During operation, the inrush current limiters surface temperature can be very high. Ensure that adjacent components are placed at a sufficient distance from the thermistor to allow for proper cooling of the NTC inrush current limiters.
- Ensure that adjacent materials are designed for operation at temperatures comparable to the surface temperature of the thermistor. Be sure that surrounding parts and materials can withstand this temperature.
- Make sure that inrush current limiters are adequately ventilated to avoid overheating.
- Avoid contamination of thermistor surface during processing.

Operation

- Use NTC inrush current limiters only within the specified operating temperature range.
- Use NTC inrush current limiters only within the specified voltage and current ranges.
- Environmental conditions must not harm the NTC inrush current limiters. Use NTC inrush current limiters only in normal atmospheric conditions.
- Contact of NTC inrush current limiters with any liquids and solvents should be prevented. It must be ensured that no water enters the NTC inrush current limiters (e.g. through plug terminals). For measurement purposes (checking the specified resistance vs. temperature), the component must not be immersed in water but in suitable liquids (e.g. Galden).
- In case of exposure of the NTC inrush current limiters to water, electrolytes or other aggressive media, these media can penetrate the coating and reach the surface of the ceramic. Low-ohmic or high-ohmic behavior may occur due to the formation of an electrolyte with metals (silver/lead/tin from metallization or solder). Low-ohmic behavior is caused by electrochemical migration, high-ohmic behavior by dissolving of the electrode. In either case, the functionality of the NTC inrush current limiters can not be assured.
- Be sure to provide an appropriate fail-safe function to prevent secondary product damage caused by malfunction (e.g. use a metal oxide varistor for limitation of overvoltage condition).

This listing does not claim to be complete, but merely reflects the experience of TDK Electronics.

Display of ordering codes for TDK Electronics products

The ordering code for one and the same product can be represented differently in data sheets, data books, other publications, on the company website, or in order-related documents such as shipping notes, order confirmations and product labels. **The varying representations of the ordering codes are due to different processes employed and do not affect the specifications of the respective products**. Detailed information can be found on the Internet under www.tdk-electronics.tdk.com/orderingcodes.

Symbols and terms

Symbol	English
B	B value
C_{test}	Test capacitance
C_{th}	Heat capacitance
I	Current
I_{max}	Maximum current within stated temperature range
I_{NTC}	NTC current
I_{test}	High test current for additional endurance tests
P_{max}	Maximum power within stated temperature range
R_{min}	Minimum resistance
R_R	Rated resistance
$\Delta R_R/R_R$	Resistance tolerance
R_S	Series resistance
R_T	Resistance at temperature T (e.g. R_{25} = resistance at 25 °C)
T	Temperature
t	Time
T_A	Ambient temperature
t_a	Thermal threshold time
T_{max}	Upper category temperature
T_{min}	Lower category temperature
T_R	Rated temperature
V	Voltage
V_{load}	Load voltage
V_{NTC}	Voltage drop across an NTC thermistor
α	Temperature coefficient
Δ	Tolerance, change
δ_{th}	Dissipation factor
τ_c	Thermal cooling time constant

Abbreviations / Notes

Symbol	English
*	To be replaced by a number in ordering codes, type designations etc.
+	To be replaced by a letter.
	All dimensions are given in mm.
	The commas used in numerical values denote decimal points.

Important notes

The following applies to all products named in this publication:

1. Some parts of this publication contain **statements about the suitability of our products for certain areas of application**. These statements are based on our knowledge of typical requirements that are often placed on our products in the areas of application concerned. We nevertheless expressly point out **that such statements cannot be regarded as binding statements about the suitability of our products for a particular customer application**. As a rule, we are either unfamiliar with individual customer applications or less familiar with them than the customers themselves. For these reasons, it is always ultimately incumbent on the customer to check and decide whether a product with the properties described in the product specification is suitable for use in a particular customer application.
2. We also point out that **in individual cases, a malfunction of electronic components or failure before the end of their usual service life cannot be completely ruled out in the current state of the art, even if they are operated as specified**. In customer applications requiring a very high level of operational safety and especially in customer applications in which the malfunction or failure of an electronic component could endanger human life or health (e.g. in accident prevention or lifesaving systems), it must therefore be ensured by means of suitable design of the customer application or other action taken by the customer (e.g. installation of protective circuitry or redundancy) that no injury or damage is sustained by third parties in the event of malfunction or failure of an electronic component.
3. **The warnings, cautions and product-specific notes must be observed.**
4. In order to satisfy certain technical requirements, **some of the products described in this publication may contain substances subject to restrictions in certain jurisdictions (e.g. because they are classed as hazardous)**. Useful information on this will be found in our Material Data Sheets on the Internet (www.tdk-electronics.tdk.com/material). Should you have any more detailed questions, please contact our sales offices.
5. We constantly strive to improve our products. Consequently, **the products described in this publication may change from time to time**. The same is true of the corresponding product specifications. Please check therefore to what extent product descriptions and specifications contained in this publication are still applicable before or when you place an order. We also **reserve the right to discontinue production and delivery of products**. Consequently, we cannot guarantee that all products named in this publication will always be available. The aforementioned does not apply in the case of individual agreements deviating from the foregoing for customer-specific products.
6. Unless otherwise agreed in individual contracts, **all orders are subject to our General Terms and Conditions of Supply**.

Important notes

7. **Our manufacturing sites serving the automotive business apply the IATF 16949 standard.** The IATF certifications confirm our compliance with requirements regarding the quality management system in the automotive industry. Referring to customer requirements and customer specific requirements ("CSR") TDK always has and will continue to have the policy of respecting individual agreements. Even if IATF 16949 may appear to support the acceptance of unilateral requirements, we hereby like to emphasize that **only requirements mutually agreed upon can and will be implemented in our Quality Management System.** For clarification purposes we like to point out that obligations from IATF 16949 shall only become legally binding if individually agreed upon.
8. The trade names EPCOS, CeraCharge, CeraDiode, CeraLink, CeraPad, CeraPlas, CSMP, CTVS, DeltaCap, DigiSiMic, ExoCore, FilterCap, FormFit, LeaXield, MiniBlue, MiniCell, MKD, MKK, MotorCap, PCC, PhaseCap, PhaseCube, PhaseMod, PhiCap, PowerHap, PQSine, PQvar, SIFERRIT, SIFI, SIKOREL, SilverCap, SIMDAD, SiMic, SIMID, SineFormer, SIOV, ThermoFuse, WindCap are **trademarks registered or pending** in Europe and in other countries. Further information will be found on the Internet at www.tdk-electronics.tdk.com/trademarks.

Release 2018-10

Mouser Electronics

Authorized Distributor

Click to View Pricing, Inventory, Delivery & Lifecycle Information:

EPCOS / TDK:

B57127P100M301 B57127P508M301 B57127P509M301 B57127P109M301 B57127P709M301 B57127P209M301

Компания «ЭлектроПласт» предлагает заключение долгосрочных отношений при поставках импортных электронных компонентов на взаимовыгодных условиях!

Наши преимущества:

- Оперативные поставки широкого спектра электронных компонентов отечественного и импортного производства напрямую от производителей и с крупнейших мировых складов;
- Поставка более 17-ти миллионов наименований электронных компонентов;
- Поставка сложных, дефицитных, либо снятых с производства позиций;
- Оперативные сроки поставки под заказ (от 5 рабочих дней);
- Экспресс доставка в любую точку России;
- Техническая поддержка проекта, помощь в подборе аналогов, поставка прототипов;
- Система менеджмента качества сертифицирована по Международному стандарту ISO 9001;
- Лицензия ФСБ на осуществление работ с использованием сведений, составляющих государственную тайну;
- Поставка специализированных компонентов (Xilinx, Altera, Analog Devices, Intersil, Interpoint, Microsemi, Aeroflex, Peregrine, Syfer, Eurofarad, Texas Instrument, Miteq, Cobham, E2V, MA-COM, Hittite, Mini-Circuits,General Dynamics и др.);

Помимо этого, одним из направлений компании «ЭлектроПласт» является направление «Источники питания». Мы предлагаем Вам помощь Конструкторского отдела:

- Подбор оптимального решения, техническое обоснование при выборе компонента;
- Подбор аналогов;
- Консультации по применению компонента;
- Поставка образцов и прототипов;
- Техническая поддержка проекта;
- Защита от снятия компонента с производства.

Как с нами связаться

Телефон: 8 (812) 309 58 32 (многоканальный)
Факс: 8 (812) 320-02-42
Электронная почта: org@eplast1.ru
Адрес: 198099, г. Санкт-Петербург, ул. Калинина, дом 2, корпус 4, литера А.