Integrated
Circuit
Systems, Inc.

ICS843-75
75MHz, LVCMOS, LVPECL
DUAL OUTPUT OSCILLATOR

GENERAL DESCRIPTION

The ICS843-75 is a SAS/SATA Dual Output Oscillator and a member of the HiPerClocks™ family of high performance devices from ICS. The ICS843-75 uses a 25MHz crystal to synthesize 75MHz. The ICS843-75 has excellent jitter performance. The ICS843-75 is packaged in a small 8-pin TSSOP, making it ideal for use in systems with limited board space.

FEATURES

- One LVCMOS/LVTTL output, 15Ω output impedence
  One LVPECL output pair
- Crystal oscillator interface designed for 25MHz, 18pF parallel resonant crystal
- Output frequency: 75MHz
- Random jitter: 3.07ps (maximum)
- Deterministic jitter: 0.13ps (maximum)
- 3.3V operating supply
- 0°C to 70°C ambient operating temperature
- Available in both standard and lead-free RoHS-compliant packages

BLOCK DIAGRAM

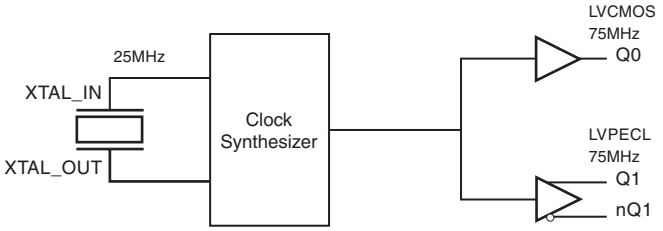

PIN ASSIGNMENT

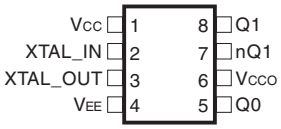

ICS843-75
8-Lead TSSOP
4.40mm x 3.0mm x 0.925mm
package body
G Package
Top View

ICS843-75
8-Lead SOIC
3.90mm x 4.92mm x 1.37mm body package
M Package
Top View

TABLE 1. PIN DESCRIPTIONS

Number	Name	Type		Description
1	V_{CC}	Power		Positive supply pin.
2, 3	XTAL_IN, XTAL_OUT	Input		Crystal oscillator interface. XTAL_IN is the input, XTAL_OUT is the output.
4	V_{EE}	Power		Negative supply pin.
5	Q0	Output		Single-ended clock output. LVCMOS/LVTTL interface levels. 15Ω output impedence.
6	V_{CCO}	Power		Output supply pin.
7, 8	nQ1, Q1	Output		Differential LVPECL output pair.

TABLE 2. PIN CHARACTERISTICS

Symbol	Parameter		Test Conditions	Minimum	Typical	Maximum	Units
C_{IN}	Input Capacitance				4		pF
R_{OUT}	Output Impedance	Q0			15		Ω

ABSOLUTE MAXIMUM RATINGS

Supply Voltage, V_{CC}	4.6V
Inputs, V_I	-0.5V to V_{CC} + 0.5 V
Outputs, V_O (LVCMOS)	-0.5V to V_{CCO} + 0.5V
Outputs, I_O (LVPECL)	
Continuous Current	50mA
Surge Current	100mA
Package Thermal Impedance, θ_{JA}	
8 Lead TSSOP	101.7°C/W (0 mps)
8 Lead SOIC	112.7°C/W (0 lfpm)
Storage Temperature, T_{STG}	-65°C to 150°C

NOTE: Stresses beyond those listed under Absolute Maximum Ratings may cause permanent damage to the device. These ratings are stress specifications only. Functional operation of product at these conditions or any conditions beyond those listed in the *DC Characteristics* or *AC Characteristics* is not implied. Exposure to absolute maximum rating conditions for extended periods may affect product reliability.

TABLE 3A. POWER SUPPLY DC CHARACTERISTICS, $V_{CC} = V_{CCO} = 3.3V \pm 0.3V$, T_A = 0°C TO 70°C

Symbol	Parameter	Test Conditions	Minimum	Typical	Maximum	Units
V_{CC}	Positive Supply Voltage		3.0	3.3	3.6	V
V_{CCO}	Output Supply Voltage		3.0	3.3	3.6	V
I_{EE}	Power Supply Current				110	mA
I_{CC}	Power Supply Current				100	mA
I_{CCO}	Output Supply Current				12	mA

TABLE 3B. LVCMOS/LVTTL DC CHARACTERISTICS, $V_{CC} = V_{CCO} = 3.3V \pm 0.3V$, T_A = 0°C TO 70°C

Symbol	Parameter	Test Conditions	Minimum	Typical	Maximum	Units
V_{OH}	Output High Voltage; NOTE 1		2.6			V
V_{OL}	Output Low Voltage; NOTE 1				0.5	V

NOTE 1: Outputs terminated with 50Ω to $V_{CCO}/2$. See Parameter Measurement Information Section, "3.3V Output Load Test Circuit".

TABLE 3C. LVPECL DC CHARACTERISTICS, $V_{CC} = V_{CCO} = 3.3V \pm 0.3V$, T_A = 0°C TO 70°C

Symbol	Parameter	Test Conditions	Minimum	Typical	Maximum	Units
V_{OH}	Output High Voltage; NOTE 1		V_{CCO} - 1.4		V_{CCO} - 0.9	V
V_{OL}	Output Low Voltage; NOTE 1		V_{CCO} - 2.0		V_{CCO} - 1.7	V
V_{SWING}	Peak-to-Peak Output Voltage Swing		0.6		1.0	V

NOTE 1: Outputs terminated with 50Ω to V_{CCO} - 2V.

TABLE 4. CRYSTAL CHARACTERISTICS (NOTE 1)

Parameter	Test Conditions	Minimum	Typical	Maximum	Units
Mode of Oscillation		Fundamental			
Frequency			25		MHz
Frequency Tolerance			±30		ppm
Frequency Stability Over Operating Temperature Range			±30		ppm
Load Capacitance (C_L); NOTE 2			18		pF
Aging for 10 Years			±15		ppm
Drive Level				1	mW

NOTE 1: Using an HC49/US SMD package, the parameters shown above target ±100ppm accuracy.
NOTE 2: See *Crystal Input Interface* in the Application Information Section.

TABLE 5. AC CHARACTERISTICS, $V_{CC} = V_{CCO} = 3.3V \pm 0.3V$, $T_A = 0°C$ TO $70°C$

Symbol	Parameter		Test Conditions	Minimum	Typical	Maximum	Units
f_{OUT}	Output Frequency				75		MHz
t_{DJ}	Deterministic Jitter; NOTE 1					0.13	ps
t_{RJ}	Random Jitter; NOTE 1					3.07	ps
t_{RMS}	RMS of Total Distribution (σ); NOTE 2					3.08	ps
t_{p-p}	Peak-to-Peak Jitter; NOTE 1					25	ps
t_{OSC}	Oscillation Start Up Time					10	ms
t_R / t_F	Output Rise/Fall Time	Q0	20% to 80%	100		500	ps
		Q1/nQ1		250		800	ps
odc	Output Duty Cycle	Q0		48		52	%
		Q1, nQ1		49		51	%

NOTE 1: Measured using Wavecrest SIA-3000.
NOTE 2: Measured using Wavecrest SIA-3000, Tj @ 10e-12BER result divided by 14.

PARAMETER MEASUREMENT INFORMATION

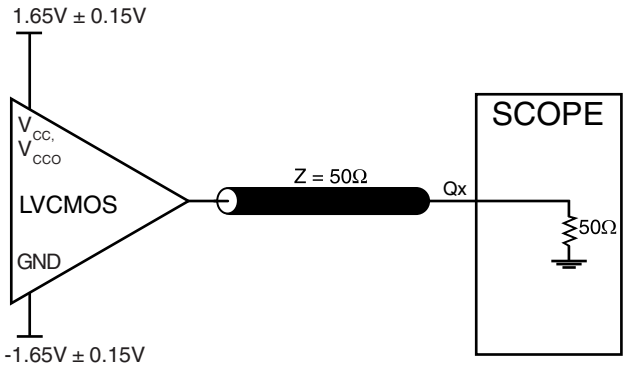

3.3V LVCMOS OUTPUT LOAD AC TEST CIRCUIT

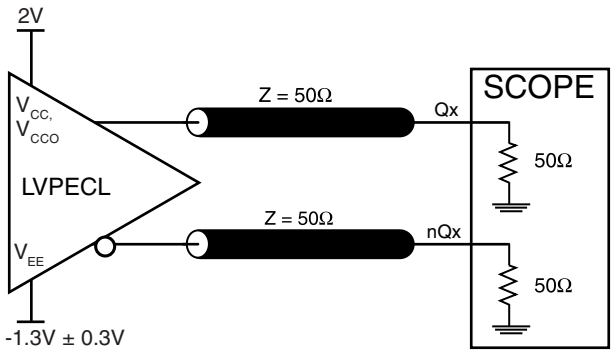

3.3V LVPECL OUTPUT LOAD AC TEST CIRCUIT

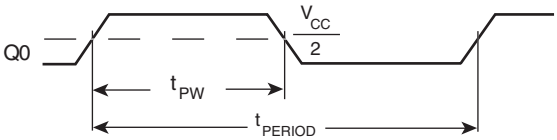

$$odc = \frac{t_{PW}}{t_{PERIOD}} \times 100\%$$

LVCMOS OUTPUT DUTY CYCLE/PULSE WIDTH/PERIOD

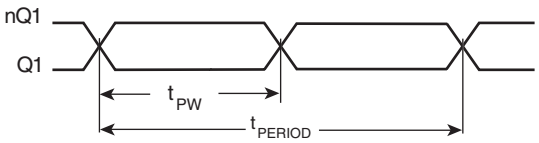

$$odc = \frac{t_{PW}}{t_{PERIOD}} \times 100\%$$

LVPECL OUTPUT DUTY CYCLE/PULSE WIDTH/PERIOD

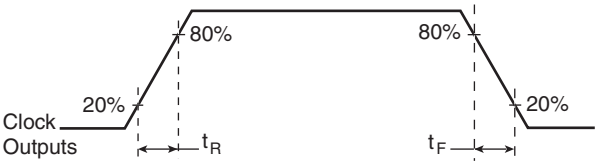

LVCMOS OUTPUT RISE/FALL TIME

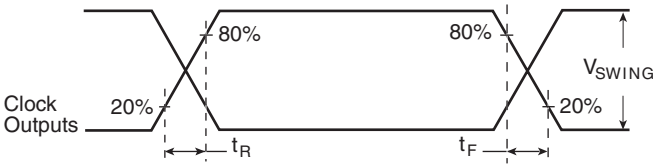

LVPECL OUTPUT RISE/FALL TIME

APPLICATION INFORMATION

RECOMMENDATIONS FOR UNUSED OUTPUT PINS

LVCMOS OUTPUT:
An unused LVCMOS output should be terminated with 100Ω to ground as close as possible to the device.

LVPECL OUTPUT
All unused LVPECL outputs can be left floating. We recommend that there is no trace attached. Both sides of the differential output pair should either be left floating or terminated.

CRYSTAL INPUT INTERFACE

The ICS843-75 has been characterized with 18pF parallel resonant crystals. The capacitor values, C1 and C2, shown in *Figure 1* below were determined using a 25MHz, 18pF parallel resonant crystal and were chosen to minimize the ppm error. The optimum C1 and C2 values can be slightly adjusted for different board layouts.

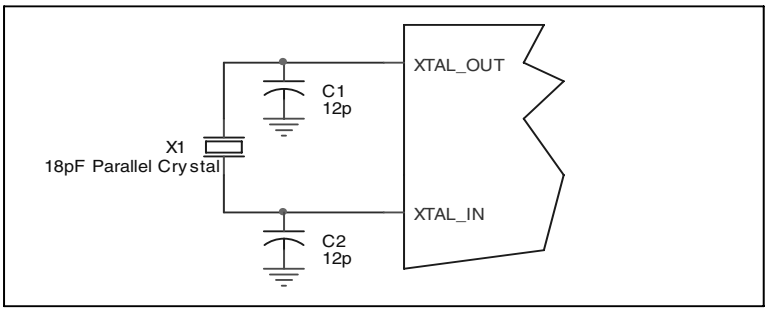

Figure 1. CRYSTAL INPUT INTERFACE

FREQUENCY STABILITY

The table shown below provides a basic guideline in selecting the proper quartz crystal that meets a timing budget of ±100ppm. For more information on selecting the proper crystal, see the application note, *Crystal Timing Budget and Accuracy for FemtoClock™* .

Parameter	Typical	Units
Frequency Tolerance	±30	ppm
Frequency Stability	±30	ppm
Aging for 10 Years	±15	ppm
Accuracy of ICS Oscillator	±10	ppm
Load Capacitance Accuracy	±3	ppm
Total Overall Timing Error	±88	ppm

TERMINATION FOR 3.3V LVPECL OUTPUT

The clock layout topology shown below is a typical termination for LVPECL outputs. The two different layouts mentioned are recommended only as guidelines.

FOUT and nFOUT are low impedance follower outputs that generate ECL/LVPECL compatible outputs. Therefore, terminating resistors (DC current path to ground) or current sources must be used for functionality. These outputs are designed to drive 50Ω transmission lines.Matched impedance techniques should be used to maximize operating frequency and minimize signal distortion. *Figures 2A and 2B* show two different layouts which are recommended only as guidelines. Other suitable clock layouts may exist and it would be recommended that the board designers simulate to guarantee compatibility across all printed circuit and clock component process variations.

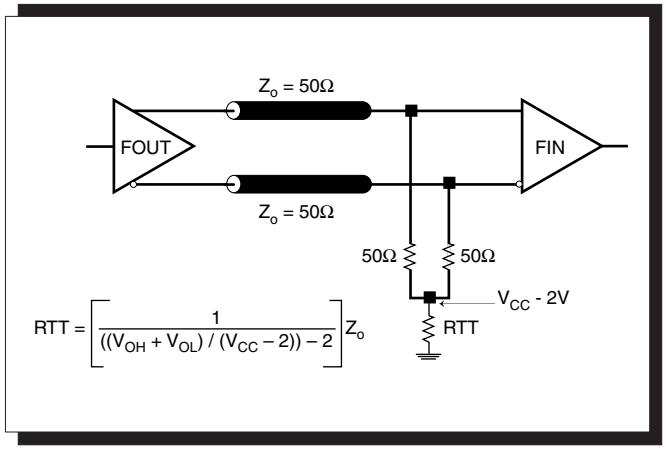

FIGURE 2A. LVPECL OUTPUT TERMINATION

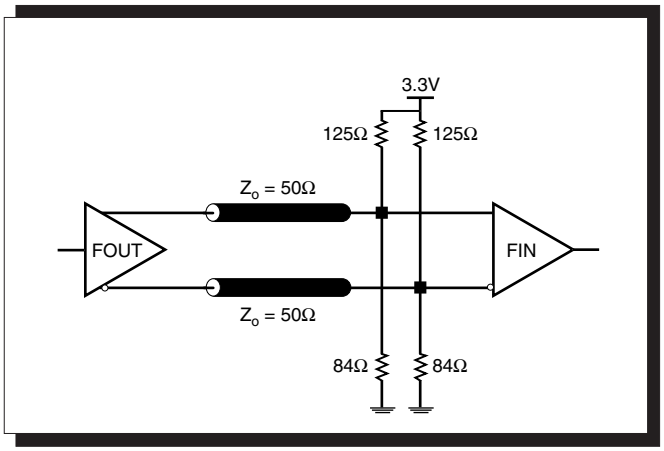

FIGURE 2B. LVPECL OUTPUT TERMINATION

POWER CONSIDERATIONS

This section provides information on power dissipation and junction temperature for the ICS843-75.
Equations and example calculations are also provided.

1. Power Dissipation.
The total power dissipation for the ICS843-75 is the sum of the core power plus the power dissipated in the load(s).
The following is the power dissipation for V_{CC} = 3.3V + 0.3V = 3.6V, which gives worst case results.
NOTE: Please refer to Section 3 for details on calculating power dissipated in the load.

- Power $(core)_{MAX} = V_{CC_MAX} * I_{EE_MAX}$ = 3.6V * 110mA = **396mW**
- Power $(outputs)_{MAX}$ = **30mW/Loaded Output pair**

Total Power$_{_MAX}$ (3.465V, with all outputs switching) = 396mW + 30mW = **426mW**

2. Junction Temperature.
Junction temperature, Tj, is the temperature at the junction of the bond wire and bond pad and directly affects the reliability of the device. The maximum recommended junction temperature for HiPerClockS™ devices is 125°C.

The equation for Tj is as follows: $Tj = \theta_{JA} * Pd_total + T_A$

Tj = Junction Temperature

θ_{JA} = Junction-to-Ambient Thermal Resistance

Pd_total = Total Device Power Dissipation (example calculation is in section 1 above)

T_A = Ambient Temperature

In order to calculate junction temperature, the appropriate junction-to-ambient thermal resistance θ_{JA} must be used. Assuming a moderate air flow of 1 meter per second and a multi-layer board, the appropriate value is 90.5°C/W per Table 6A below.

Therefore, Tj for an ambient temperature of 70°C with all outputs switching is:
70°C + 0.426W * 90.5°C/W = 108.6°C. This is below the limit of 125°C.

This calculation is only an example. Tj will obviously vary depending on the number of loaded outputs, supply voltage, air flow, and the type of board (single layer or multi-layer).

TABLE 6A. THERMAL RESISTANCE θ_{JA} FOR 8-PIN TSSOP, FORCED CONVECTION

θ_{JA} by Velocity (Meters per Second)			
	0	**1**	**2.5**
Multi-Layer PCB, JEDEC Standard Test Boards	101.7°C/W	90.5°C/W	89.8°C/W

TABLE 6B. THERMAL RESISTANCE θ_{JA} FOR 8 LEAD SOIC FORCED CONVECTION

θ_{JA} by Velocity (Linear Feet per Minute)			
	0	**200**	**500**
Single-Layer PCB, JEDEC Standard Test Boards	153.3°C/W	128.5°C/W	115.5°C/W
Multi-Layer PCB, JEDEC Standard Test Boards	112.7°C/W	103.3°C/W	97.1°C/W

NOTE: Most modern PCB designs use multi-layered boards. The data in the second row pertains to most designs.

3. Calculations and Equations.
The purpose of this section is to derive the power dissipated into the load.
LVPECL output driver circuit and termination are shown in *Figure 3.*

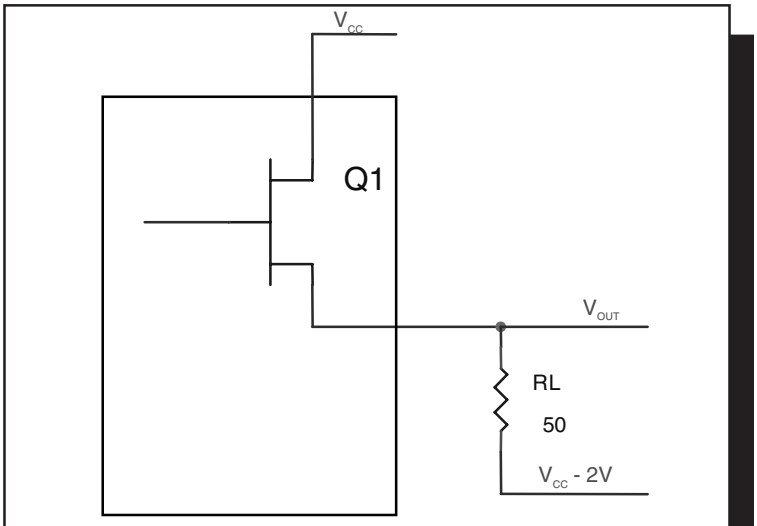

FIGURE 3. LVPECL DRIVER CIRCUIT AND TERMINATION

To calculate worst case power dissipation into the load, use the following equations which assume a 50Ω load, and a termination
voltage of V_{CC} - 2V.

- For logic high, $V_{OUT} = V_{OH_MAX} = \mathbf{V_{CC_MAX} - 0.9V}$

  $(V_{CCO_MAX} - V_{OH_MAX}) = \mathbf{0.9V}$

- For logic low, $V_{OUT} = V_{OL_MAX} = \mathbf{V_{CC_MAX} - 1.7V}$

  $(V_{CCO_MAX} - V_{OL_MAX}) = \mathbf{1.7V}$

Pd_H is power dissipation when the output drives high.
Pd_L is the power dissipation when the output drives low.

$Pd_H = [(V_{OH_MAX} – (V_{CC_MAX} - 2V))/R_L] * (V_{CC_MAX} - V_{OH_MAX}) = [(2V - (V_{CC_MAX} - V_{OH_MAX}))/R_L] * (V_{CC_MAX} - V_{OH_MAX}) =$
$[(2V - 0.9V)/50\Omega] * 0.9V =$ **19.8mW**

$Pd_L = [(V_{OL_MAX} – (V_{CC_MAX} - 2V))/R_L] * (V_{CC_MAX} - V_{OL_MAX}) = [(2V - (V_{CC_MAX} - V_{OL_MAX}))/R_L] * (V_{CC_MAX} - V_{OL_MAX}) =$
$[(2V - 1.7V)/50\Omega] * 1.7V =$ **10.2mW**

Total Power Dissipation per output pair = Pd_H + Pd_L = **30mW**

RELIABILITY INFORMATION

TABLE 7A. θ_{JA} VS. AIR FLOW TABLE FOR 8 LEAD TSSOP

θ_{JA} by Velocity (Meters per Second)			
	0	**1**	**2.5**
Multi-Layer PCB, JEDEC Standard Test Boards	101.7°C/W	90.5°C/W	89.8°C/W

TABLE 7B. θ_{JA} VS. AIR FLOW TABLE 8 LEAD SOIC

θ_{JA} by Velocity (Linear Feet per Minute)			
	0	**200**	**500**
Single-Layer PCB, JEDEC Standard Test Boards	153.3°C/W	128.5°C/W	115.5°C/W
Multi-Layer PCB, JEDEC Standard Test Boards	112.7°C/W	103.3°C/W	97.1°C/W

NOTE: Most modern PCB designs use multi-layered boards. The data in the second row pertains to most designs.

TRANSISTOR COUNT

The transistor count for ICS843-75 is: 2376

PACKAGE OUTLINE - G SUFFIX FOR 8 LEAD TSSOP

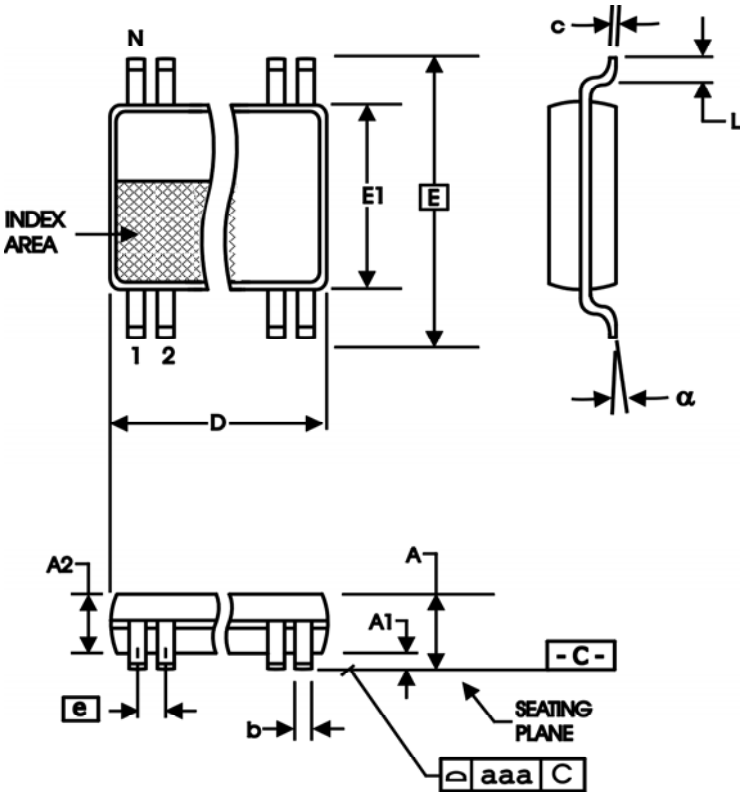

PACKAGE OUTLINE - M SUFFIX FOR 8 LEAD SOIC

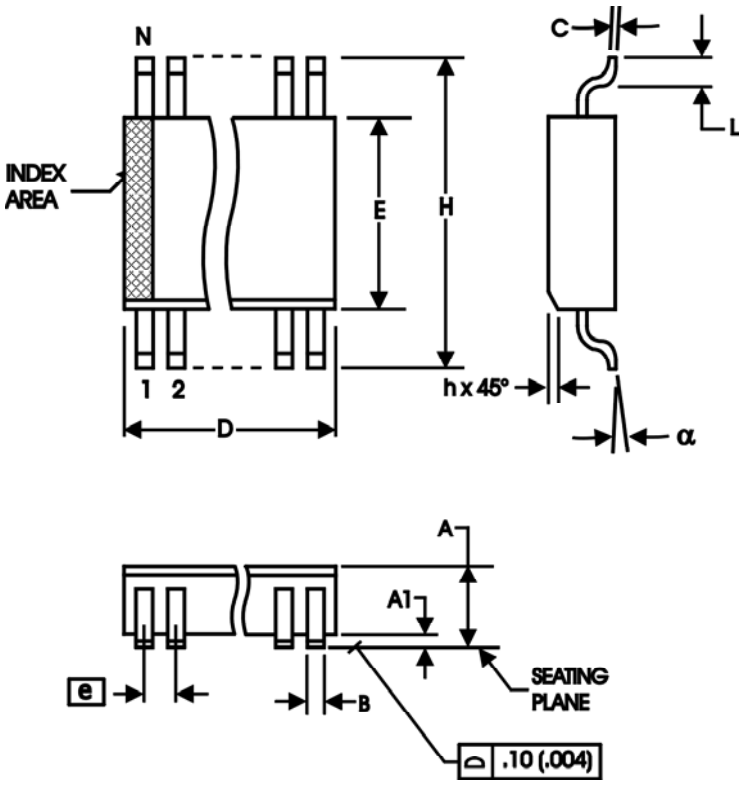

TABLE 8A. PACKAGE DIMENSIONS

SYMBOL	Millimeters	
	Minimum	Maximum
N	8	
A	--	1.20
A1	0.05	0.15
A2	0.80	1.05
b	0.19	0.30
c	0.09	0.20
D	2.90	3.10
E	6.40 BASIC	
E1	4.30	4.50
e	0.65 BASIC	
L	0.45	0.75
α	0°	8°
aaa	--	0.10

Reference Document: JEDEC Publication 95, MO-153

TABLE 8B. PACKAGE DIMENSIONS

SYMBOL	Millimeters	
	MINIMUM	MAXIMUM
N	8	
A	1.35	1.75
A1	0.10	0.25
B	0.33	0.51
C	0.19	0.25
D	4.80	5.00
E	3.80	4.00
e	1.27 BASIC	
H	5.80	6.20
h	0.25	0.50
L	0.40	1.27
α	0°	8°

Reference Document: JEDEC Publication 95, MS-012

TABLE 9. ORDERING INFORMATION

Part/Order Number	Marking	Package	Shipping Packaging	Temperature
ICS843AG-75	43A75	8 lead TSSOP	tube	0°C to 70°C
ICS843AG-75T	43A75	8 lead TSSOP	2500 tape & reel	0°C to 70°C
ICS843AG-75LF	TBD	8 lead "Lead-Free" TSSOP	tube	0°C to 70°C
ICS843AG-75LFT	TBD	8 lead "Lead-Free" TSSOP	2500 tape & reel	0°C to 70°C
ICS843AM-75	TBD	8 lead SOIC	tube	0°C to 70°C
ICS843AM-75T	TBD	8 lead SOIC	2500 tape & reel	0°C to 70°C
ICS843AM-75LF	TBD	8 lead "Lead-Free" SOIC	tube	0°C to 70°C
ICS843AM-75LFT	TBD	8 lead "Lead-Free" SOIC	2500 tape & reel	0°C to 70°C

NOTE: Parts that are ordered with an "LF" suffix to the part number are the Pb-Free configuration and are RoHS compliant.

The aforementioned trademark, HiPerClockS is a trademark of Integrated Circuit Systems, Inc. or its subsidiaries in the United States and/or other countries.
While the information presented herein has been checked for both accuracy and reliability, Integrated Circuit Systems, Incorporated (ICS) assumes no responsibility for either its use or for infringement of any patents or other rights of third parties, which would result from its use. No other circuits, patents, or licenses are implied. This product is intended for use in normal commercial applications. Any other applications such as those requiring extended temperature range, high reliability, or other extraordinary environmental requirements are not recommended without additional processing by ICS. ICS reserves the right to change any circuitry or specifications without notice. ICS does not authorize or warrant any ICS product for use in life support devices or critical medical instruments.

Компания «ЭлектроПласт» предлагает заключение долгосрочных отношений при поставках импортных электронных компонентов на взаимовыгодных условиях!

Наши преимущества:

- Оперативные поставки широкого спектра электронных компонентов отечественного и импортного производства напрямую от производителей и с крупнейших мировых складов;
- Поставка более 17-ти миллионов наименований электронных компонентов;
- Поставка сложных, дефицитных, либо снятых с производства позиций;
- Оперативные сроки поставки под заказ (от 5 рабочих дней);
- Экспресс доставка в любую точку России;
- Техническая поддержка проекта, помощь в подборе аналогов, поставка прототипов;
- Система менеджмента качества сертифицирована по Международному стандарту ISO 9001;
- Лицензия ФСБ на осуществление работ с использованием сведений, составляющих государственную тайну;
- Поставка специализированных компонентов (Xilinx, Altera, Analog Devices, Intersil, Interpoint, Microsemi, Aeroflex, Peregrine, Syfer, Eurofarad, Texas Instrument, Miteq, Cobham, E2V, MA-COM, Hittite, Mini-Circuits,General Dynamics и др.);

Помимо этого, одним из направлений компании «ЭлектроПласт» является направление «Источники питания». Мы предлагаем Вам помощь Конструкторского отдела:

- Подбор оптимального решения, техническое обоснование при выборе компонента;
- Подбор аналогов;
- Консультации по применению компонента;
- Поставка образцов и прототипов;
- Техническая поддержка проекта;
- Защита от снятия компонента с производства.

Как с нами связаться

Телефон: 8 (812) 309 58 32 (многоканальный)
Факс: 8 (812) 320-02-42
Электронная почта: org@eplast1.ru
Адрес: 198099, г. Санкт-Петербург, ул. Калинина, дом 2, корпус 4, литера А.