Low-Cost Sample-and-Hold Amplifier

AD582

FEATURES

Suitable for 12-Bit Applications
High Sample/Hold Current Ratio: 10^7
Low Acquisition Time: 6µs to 0.1%
Low Charge Transfer: <2pC
High Input Impedance in Sample-and-Hold Modes
Connect in Any Op Amp Configuration
Differential Logic Inputs
MIL-STD-883 Compliant Versions Available

PIN CONFIGURATIONS

10-Pin TO-100

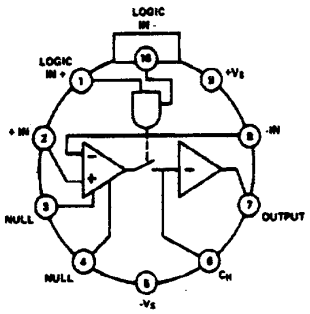

TOP VIEW

14-Pin DIP TO-116

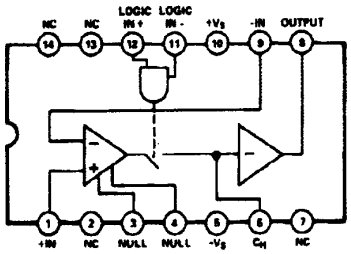

PRODUCT DESCRIPTION

The AD582 is a low-cost integrated circuit sample-and-hold amplifier consisting of a high performance operational amplifier, a low leakage analog switch and a JFET integrating amplifier – all fabricated on a single monolithic chip. An external holding capacitor, connected to the device, completes the sample-and-hold function.

With the analog switch closed, the AD582 functions like a standard op amp; any feedback network may be connected around the device to control gain and frequency response. With the switch open, the capacitor holds the output at its last level, regardless of input voltage.

Typical applications for the AD582 include sampled data systems, D/A deglitchers, analog de-multiplexers, auto null systems, strobed measurement systems and A/D speed enhancement.

The device is available in two versions: the "K" specified for operation over the 0 to +70°C commercial temperature range and the "S" specified over the extended temperature range, -55°C to +125°C. All versions may be obtained in either the hermetic sealed, TO-100 can or the TO-116 DIP.

PRODUCT HIGHLIGHTS

1. The specially designed input stage presents a high impedance to the signal source in both sample and hold modes (up to ±12V). Even with signal levels up to $\pm V_S$, no undesirable signal inversion, peaking or loss of hold voltage occurs.
2. The AD582 may be connected in any standard op amp configuration to control gain or frequency response and provide signal inversion, etc.
3. The AD582 offers a high, sample-to-hold current ratio: 10^7. The ratio of the available charging current to the holding leakage current is often used as a figure of merit for a sample and hold circuit.
4. The AD582 has a typical charge transfer less than 2pC. A low charge transfer produces less offset error and permits the use of smaller hold capacitors for faster signal acquisition.
5. The AD582 provides separate analog and digital grounds, thus improving the device's immunity to ground and switching transients.
6. The AD582 is available in versions compliant with MIL-STD-883. Refer to the Analog Devices Military Products Databook or current AD582/883B data sheet for detailed specifications.

REV. A

Information furnished by Analog Devices is believed to be accurate and reliable. However, no responsibility is assumed by Analog Devices for its use; nor for any infringements of patents or other rights of third parties which may result from its use. No license is granted by implication or otherwise under any patent or patent rights of Analog Devices.

One Technology Way, P.O. Box 9106, Norwood, MA 02062-9106, U.S.A.
Tel: 617/329-4700 Fax: 617/326-8703 Twx: 710/394-6577
Telex: 924491 Cable: ANALOG NORWOODMASS

AD582—SPECIFICATIONS (typical @ +25°C, V_S = ±15V and C_H = 1000pF, A = +1 unless otherwise specified)

MODEL	AD582K	AD582S
SAMPLE/HOLD CHARACTERISTICS		
Acquisition Time, 10V Step to 0.1%, C_H = 100pF	6μs	•
Acquisition Time, 10V Step to 0.01%, C_H = 1000pF	25μs	•
Aperture Delay, 20V p-p Input, Hold 0V	200ns	•
Aperture Jitter, 20V p-p Input, Hold 0V	15ns	•
Settling Time, 20V p-p Input, Hold 0V, to 0.01%	0.5μs	•
Droop Current, Steady State, ±10V_{OUT}	100pA max	•
Droop Current, T_{min} to T_{max}	1nA	150nA max
Charge Transfer	5pC max (1.5pC typ)	•
Sample to Hold Offset	0.5mV	•
Feedthrough Capacitance 20V p-p, 10kHz Input	0.05pF	•
TRANSFER CHARACTERISTICS		
Open Loop Gain V_{OUT} = 20V p-p, R_L = 2k	25k min (50k typ)	•
Common Mode Rejection V_{CM} = 20V p-p	60dB min (70dB typ)	•
Small Signal Gain Bandwidth V_{OUT} = 100mV p-p, C_H = 100pF	1.5MHz	•
Full Power Bandwidth V_{OUT} = 20V p-p, C_H = 100pF	70kHz	•
Slew Rate V_{OUT} = 20V p-p, C_H = 100pF	3V/μs	•
Output Resistance Hold Mode, I_{OUT} = ±5mA	12Ω	•
Linearity V_{OUT} = 20V p-p, R_L = 2k	±0.01%	•
Output Short Circuit Current	±25mA	•
ANALOG INPUT CHARACTERISTICS		
Offset Voltage	6mV max (2mV typ)	•
Offset Voltage, T_{min} to T_{max}	4mV	8mV max (5mV typ)
Bias Current	3μA max (1.5μA typ)	•
Offset Current	300nA max (75nA typ)	•
Offset Current, T_{min} to T_{max}	100nA	400nA max (100nA typ)
Input Capacitance, f = 1MHz	2pF	•
Input Resistance, Sample or Hold 20V p-p Input, A = +1	30MΩ	•
Absolute Max Diff Input Voltage	30V	•
Absolute Max Input Voltage, Either Input	±V_S	•
DIGITAL INPUT CHARACTERISTICS		
+Logic Input Voltage		
Hold Mode, T_{min} to T_{max}, -Logic @ 0V	+2V min	•
Sample Mode, T_{min} to T_{max}, -Logic @ 0V	+0.8V max	•
+Logic Input Current		
Hold Mode, +Logic @ +5V, -Logic @ 0V	1.5μA	•
Sample Mode, +Logic @ 0V, -Logic @ 0V	1nA	•
-Logic Input Current		
Hold Mode, +Logic @ +5V, -Logic @ 0V	24μA	•
Sample Mode, +Logic @ 0V, -Logic @ 0V	4μA	•
Absolute Max Diff Input Voltage, +L to -L	+15V/-6V	•
Absolute Max Input Voltage, Either Input	±V_S	•
POWER SUPPLY CHARACTERISTICS		
Operating Voltage Range	±9V to ±18V	±9V to ±22V
Supply Current, R_L = ∞	4.5mA max (3mA typ)	•
Power Supply Rejection, ΔV_S = 5V, Sample Mode (see next page)	60dB min (75dB typ)	•
TEMPERATURE RANGE		
Specified Performance	0 to +70°C	-55°C to +125°C
Operating	-25°C to +85°C	-55°C to +125°C
Storage	-65°C to +150°C	•
Lead Temperature (Soldering, 15 sec)	+300°C	•
PACKAGE OPTION[1,2]		
TO-100 (H-10A)	AD582KH	AD582SH
TO-116 (D-14)	AD582KD	AD582SD

NOTES
•Specifications same as AD582K.
[1]D = Ceramic DIP; H = Hermetic Metal Can. For outline information see Package Information section.
[2]For AD582/883B specifications, refer to Analog Devices Military Products Databook.
Specifications subject to change without notice.

APPLYING THE AD582

Both the inverting and non-inverting inputs are brought out to allow op amp type versatility in connecting and using the AD582. Figure 1 shows the basic non-inverting unity gain connection requiring only an external hold capacitor and the usual power supply bypass capacitors. An offset null pot can be added for more critical applications.

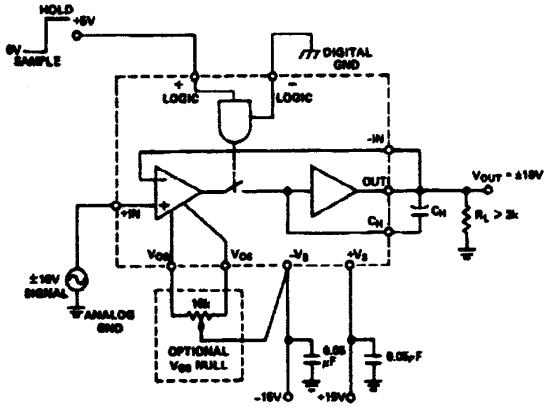

Figure 1. Sample and Hold with A = +1

Figure 2 shows a non-inverting configuration where voltage gain, A_V, is set by a pair of external resistors. Frequency shaping or non-linear networks can also be used for special applications.

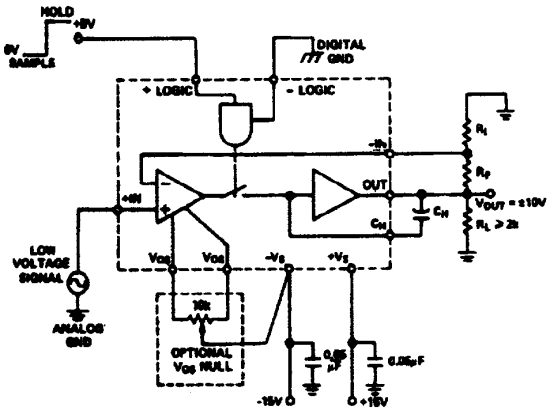

Figure 2. Sample and Hold with $A = (1 + R_F/R_I)$

The hold capacitor, C_H, should be a high quality polystyrene (for temperatures below +85°C) or Teflon type with low dielectric absorption. For high speed, limited accuracy applications, capacitors as small as 100pF may be used. Larger values are required for accuracies of 12 bits and above in order to minimize feedthrough, sample to hold offset and droop errors (see Figure 6). Care should be taken in the circuit layout to minimize coupling between the hold capacitor and the digital or signal inputs.

In the hold mode, the output voltage will follow any change in the $-V_S$ supply. Consequently, this supply should be well regulated and filtered.

Biasing the +Logic input anywhere between -6V to +0.8V with respect to the -Logic will set the sample mode. The hold mode will result from any bias between +2.0V and ($+V_S$ - 3V). The sample and hold modes will be controlled differentially with the absolute voltage at either logic input ranging from $-V_S$ to within 3V of $+V_S$ (V_S - 3V). Figure 3 illustrates some examples of the flexibility of this feature.

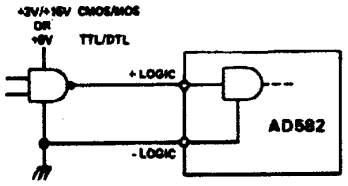

Figure 3A. Standard Logic Connection

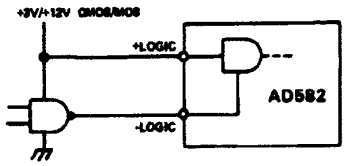

Figure 3B. Inverted Logic Sense Connection

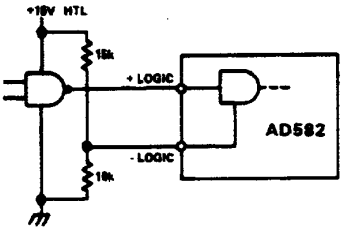

Figure 3C. High Threshold Logic Connection

DEFINITION OF TERMS

Figure 4 illustrates various dynamic characteristics of the AD582.

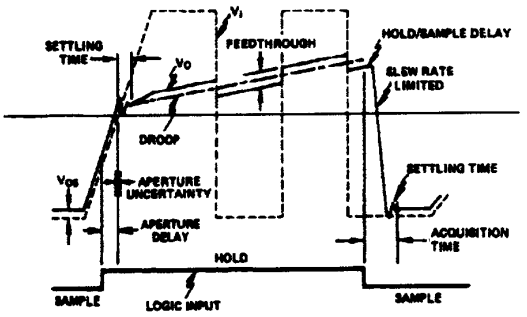

Figure 4. Pictorial Showing Various S/H Characteristics

Aperture Delay is the time required after the "hold" command until the switch is fully open and produces a delay in the effective sample timing. Figure 5 is a plot giving the maximum frequency at which the AD582 can sample an input with a given accuracy (lower curve).

Aperture Jitter is the uncertainty in Aperture Time. The Aperture Time can be eliminated by advancing the sample-to-hold command 200ns with respect to the input signal. The Aperture Jitter now determines the maximum sampling frequency (upper curve of Figure 5).

Acquisition Time is the time required by the device to reach its final value within a given error band after the sample command has been given. This includes switch delay time, slewing time and settling time for a given output voltage change.

Droop is the change in the output voltage from the "held" value as a result of device leakage. In the AD582, droop can be in either the positive or negative direction. Droop rate may be calculated from droop current using the following formula:

$$\frac{\Delta V}{\Delta T}\,(\text{Volts/sec}) = \frac{I(\text{pA})}{C_H(\text{pF})}$$

(See also Figure 6.)

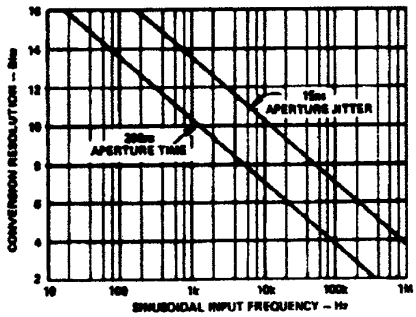

Figure 5. Maximum Frequency of Input Signal for ½LSB Sampling Accuracy

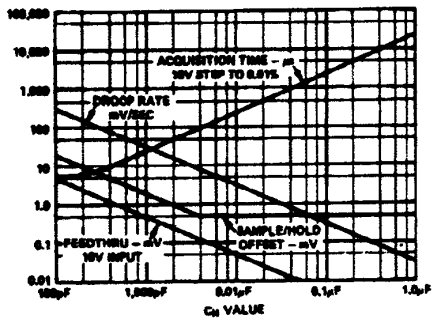

Figure 6. Sample-and-Hold Performance as a Function of Hold Capacitance

Feedthrough is that component of the output which follows the input signal *after* the switch is open. As a percentage of the input, feedthrough is determined as the ratio of the feedthrough capacitance to the hold capacitance (C_F/C_H).

Sample-to-Hold Offset is an output shift or step caused by charge injection into the hold capacitor as the device is switched from sample to hold. The charge transfer generates a sample-to-hold offset where:

$$\text{S/H Offset (V)} = \frac{\text{Charge (pC)}}{C_H\,(\text{pF})}$$

This offset also has a dc component as shown in Figure 6.

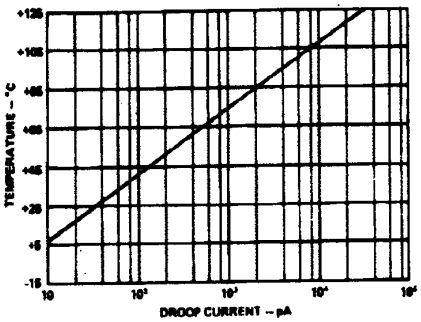

Figure 7. Droop Current vs. Temperature

OUTLINE DIMENSIONS

Dimensions shown in inches and (mm).

TO-100 "H"

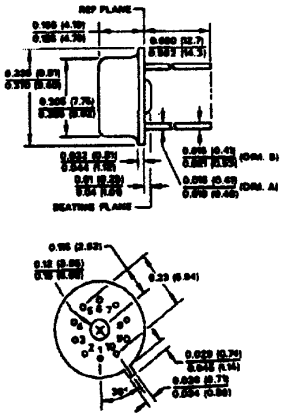

TO-116 "D"

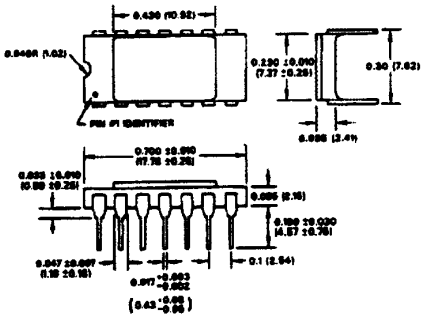

C538c—6—6/86

PRINTED IN U.S.A.

Компания «ЭлектроПласт» предлагает заключение долгосрочных отношений при поставках импортных электронных компонентов на взаимовыгодных условиях!

Наши преимущества:

- Оперативные поставки широкого спектра электронных компонентов отечественного и импортного производства напрямую от производителей и с крупнейших мировых складов;
- Поставка более 17-ти миллионов наименований электронных компонентов;
- Поставка сложных, дефицитных, либо снятых с производства позиций;
- Оперативные сроки поставки под заказ (от 5 рабочих дней);
- Экспресс доставка в любую точку России;
- Техническая поддержка проекта, помощь в подборе аналогов, поставка прототипов;
- Система менеджмента качества сертифицирована по Международному стандарту ISO 9001;
- Лицензия ФСБ на осуществление работ с использованием сведений, составляющих государственную тайну;
- Поставка специализированных компонентов (Xilinx, Altera, Analog Devices, Intersil, Interpoint, Microsemi, Aeroflex, Peregrine, Syfer, Eurofarad, Texas Instrument, Miteq, Cobham, E2V, MA-COM, Hittite, Mini-Circuits,General Dynamics и др.);

Помимо этого, одним из направлений компании «ЭлектроПласт» является направление «Источники питания». Мы предлагаем Вам помощь Конструкторского отдела:

- Подбор оптимального решения, техническое обоснование при выборе компонента;
- Подбор аналогов;
- Консультации по применению компонента;
- Поставка образцов и прототипов;
- Техническая поддержка проекта;
- Защита от снятия компонента с производства.

Как с нами связаться

Телефон: 8 (812) 309 58 32 (многоканальный)
Факс: 8 (812) 320-02-42
Электронная почта: org@eplast1.ru
Адрес: 198099, г. Санкт-Петербург, ул. Калинина, дом 2, корпус 4, литера А.