"Ultra-Mini" SiSonic™ Microphone Specification With MaxRF Protection – *Halogen Free*

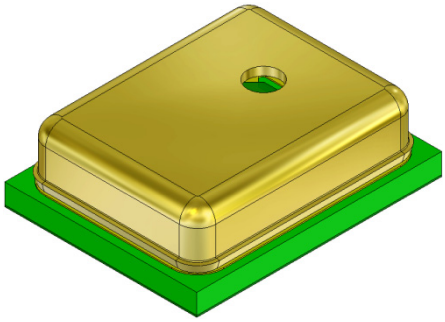

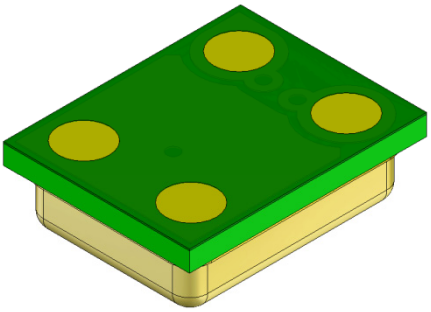

Knowles Acoustics
1151 Maplewood Drive
Itasca, IL 60143

1. DESCRIPTION AND APPLICATION

1.1 Description

"Ultra Mini" Surface Mount Silicon Microphone with Maximum RF Protection – *Halogen Free*

1.2 Application

Hand held consumer electronics

2. PART MARKING

Identification Number Convention

S	1	2	3
4	5	6	7

S: Manufacturing Location

"S" – Knowles Electronics Suzhou
Suzhou, China

"No Alpha Character" – Knowles Electronics Itasca
Itasca, IL USA

"E" – Engineering Samples

Digits 1 – 7: Job Identification Number

3. TEMPERATURE RANGE

3.1 Operating Temperature Range: -40°C to +100°C

3.2 Storage Temperature Range: -40°C to +100°C

4. ACOUSTIC & ELECTRICAL SPECIFICATIONS

	Symbol	Condition	Limits			Unit
			Min.	Nom.	Max.	
Directivity		Omni-directional				
Sensitivity	S	@ 1kHz (0dB=1V/Pa)	-45	-42	-39	dB
Output impedance	Z_{OUT}	@ 1kHz (0dB=1V/Pa)	---	---	300	Ω
Current Consumption	I_{DSS}	across 1.5 to 3.6 volts	---	---	250	µA
Signal to Noise Ratio	S/N	@ 1kHz (0dB=1V/Pa)	---	59	---	dB
Supply Voltage	Vs		1.5	---	3.6	V
Sensitivity Loss across Voltage		Change in sensitivity over 3.6v to 1.5v	No Change Across Voltage Range			dB
THD		At 100dB SPL, THD < 1% At 115dB SPL, THD < 10%				dB

5. FREQUENCY RESPONSE CURVE

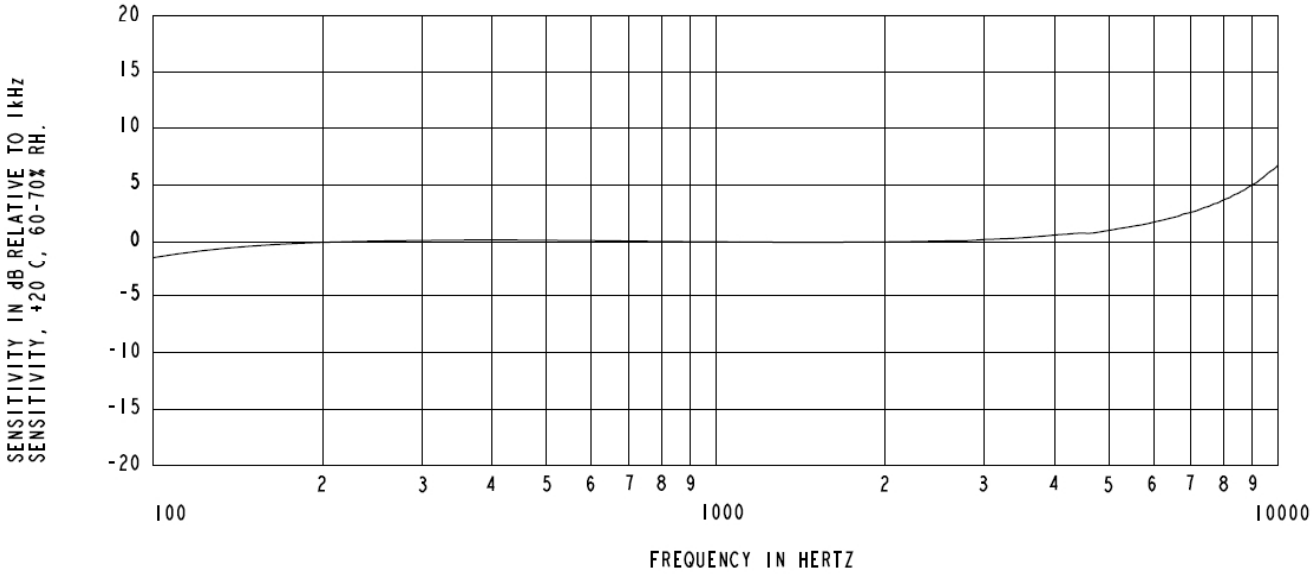

6. MECHANICAL SPECIFICATIONS

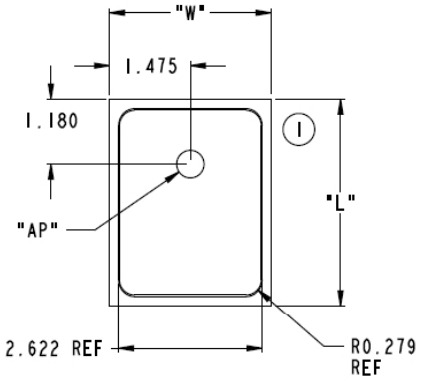

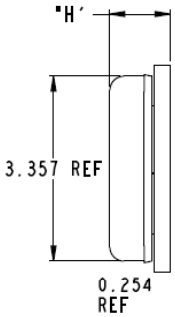

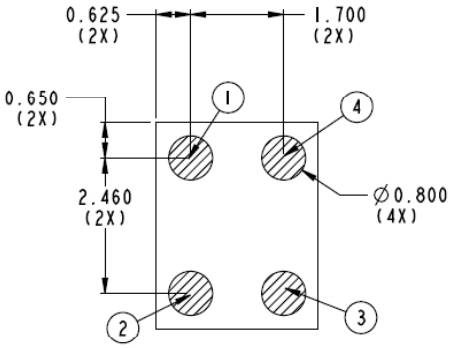

ITEM	DIMENSION	TOLERANCE	UNITS
HEIGHT (H)	1.100	±0.10	mm
LENGTH (L)	3.760	±0.10	mm
WIDTH (W)	2.950	±0.10	mm
ACOUSTIC PORT (AP)	∅0.500	±0.10	mm

PIN OUTPUT	
PIN #	FUNCTION
1	POWER (Vdd)
2	GROUND
3	GROUND
4	OUTPUT

NOTES:

1. DIMENSIONS IN MILLIMETERS UNLESS OTHERWISE SPECIFIED.
2. TOLERANCE ±0.15mm UNLESS OTHERWISE SPECIFIED.

7. RECOMMENDED CUSTOMER LAND PATTERN

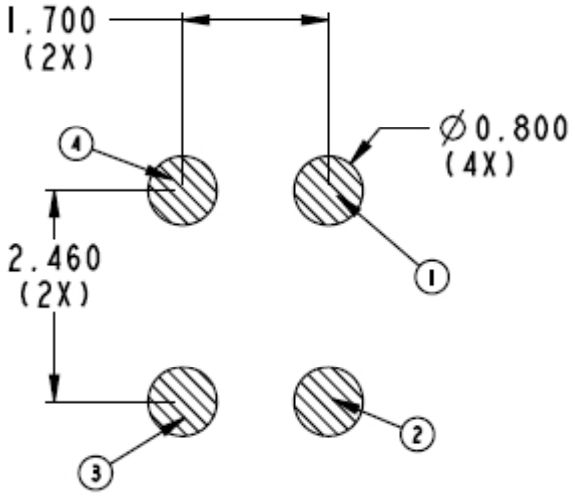

8. RECOMMENDED SOLDER STENCIL PATTERN

N/A

9. RECOMMENDED INTERFACE CIRCUIT

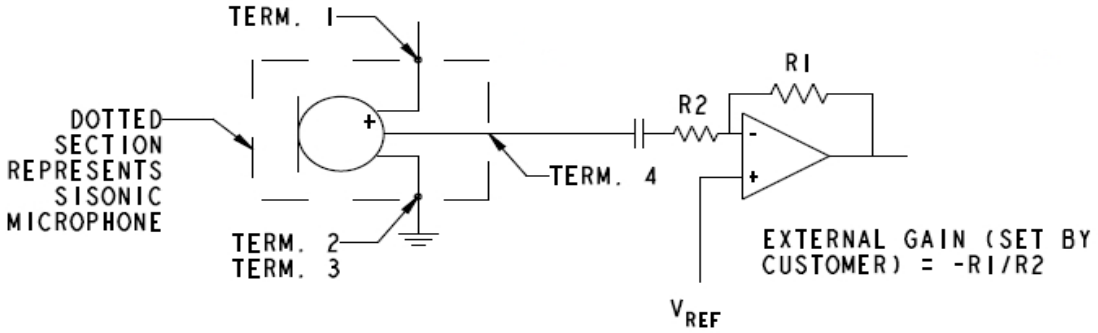

10. PACKAGING DETAIL

ITEM	DIMENSION (MM [INCH])	TOLERANCE (MM [INCH])
A_O	4.16	±0.10
B_O	3.40	±0.10
K_O	1.30	±0.10
L_P	8.00	±0.10
L_S	4.00	±0.20 OVER 10 HOLES
L_O	2.00	±0.05
W_T	12.00	±0.30
W_P	5.50	±0.05
W_S	1.75	±0.10
T	0.30	±0.05
D_P	Ø1.50	+0.10/-0
D_S	Ø1.50	+0.10/-0
D_C	Ø1.0	±0.05

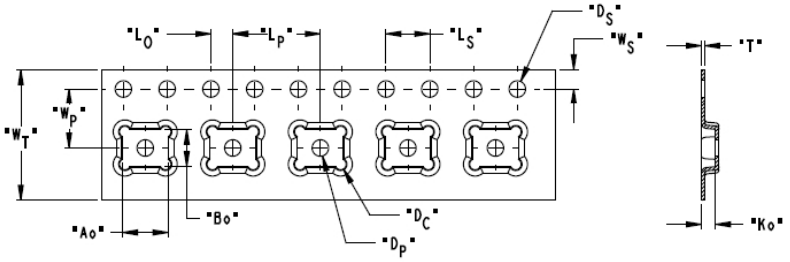

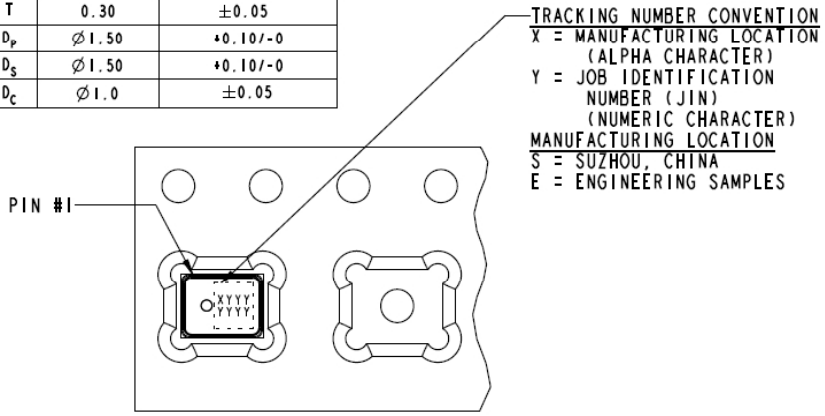

MODEL NUMBER	SUFFIX	REEL DIAMETER	QUANTITY PER REEL
SPU0410HR5H-PB	-2	7"	1,200
SPU0410HR5H-PB	-7	13"	5,700

TAPE & REEL	PER EIA-481
LABEL	LABEL APPLIED TO EXTERNAL PACAGE AND DIRECT TO REEL.

11. SOLDER REFLOW PROFILE

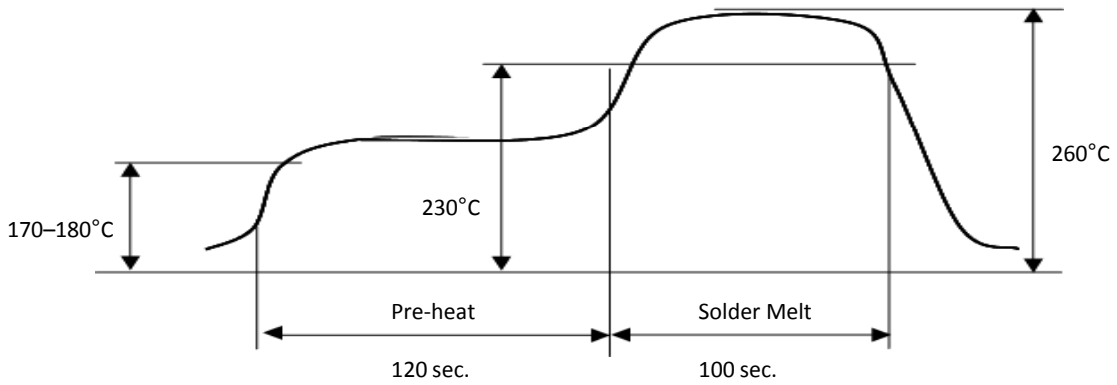

Stage	***Temperature Profile***	***Time (maximum)***
Pre-heat	170 ~ 180 C	120 sec.
Solder Melt	Above 230 C	100 sec.
Peak	260 C maximum	30 sec.

Notes:
1. Do not pull a vacuum over the port hole of the microphone. Pulling a vacuum over the port hole can damage the device.
2. Do not board wash after the reflow process. Board washing and cleaning agents can damage the device. Do not expose to ultrasonic processing or cleaning.
3. Number of Reflow = recommend no more than 3 cycles.

12. ADDITIONAL NOTES

(A) Shelf life: Twelve (12) months when devices are to be stored in factory supplied, unopened ESD moisture sensitive bag under maximum environmental conditions of 30ºC, 70% R.H.

(B) MSL (moisture sensitivity level) Class 2a.

13. RELIABILITY SPECIFICATIONS

Note: After test conditions are performed, the sensitivity of the microphone shall not deviate more than 3dB from its initial value.

Test	Description
Thermal Shock	100 cycles of air-air thermal shock from -40C to +125C with 15min soaks. (ICE 68-2-4)
High Temperature Storage	+105C environment for 1,000 hours. (IEC 68-2-2 Test Ba)
Low Temperature Storage	-40C environment for 1,000 hours. (IEC 68-2-2 Test Aa)
High Temperature Bias	+105C environment while under bias for 1,000 hours. (IEC 68-2-2 Test Ba)
Low Temperature Bias	-40C environment while under bias for 1,000 hours. (IEC 68-2-2 Test Aa)
Temperature / Humidity Bias	+85C/85% RH environment while under bias for 500 hours. (JESD22-A101A-B)
Vibration	4 cycles lasting 12 minutes from 20 to 2,000Hz in X, Y, and Z direction with a peak acceleration of 20g. (MIL 883E, Method 2007.2, A)
Electrostatic Discharge	3 discharges at +/- 8kV direct contact to the lid when unit is grounded (IEC 61000-4-2) and 3 discharges at +/- 2kV direct contact to the I/O pins (MIL 883E, Method 3015.7)
Reflow	5 reflow cycles with peak temperature of 260C.
Mechanical Shock	3 pulses of 10,000g in the X, Y, and Z direction. (IEC 68-2-27, Test Ea)

14. SPECIFICATION REVISIONS

Revision	Detailed Specification Changes	Date
X1	Preliminary Specification Release	06-24-2008
A	Specification release	02-17-2009

The information contained in this literature is based on our experience to date and is believed to be reliable and it is subject to change without notice. It is intended as a guide for use by persons having technical skill at their own discretion and risk. We do not guarantee favorable results or assume any liability in connection with its use. Dimensions contained herein are for reference purposes only. For specific dimensional requirements consult factory. This publication is not to be taken as a license to operate under, or recommendation to infringe any existing patents. This supersedes and voids all previous literature.

Компания «ЭлектроПласт» предлагает заключение долгосрочных отношений при поставках импортных электронных компонентов на взаимовыгодных условиях!

Наши преимущества:

- Оперативные поставки широкого спектра электронных компонентов отечественного и импортного производства напрямую от производителей и с крупнейших мировых складов;
- Поставка более 17-ти миллионов наименований электронных компонентов;
- Поставка сложных, дефицитных, либо снятых с производства позиций;
- Оперативные сроки поставки под заказ (от 5 рабочих дней);
- Экспресс доставка в любую точку России;
- Техническая поддержка проекта, помощь в подборе аналогов, поставка прототипов;
- Система менеджмента качества сертифицирована по Международному стандарту ISO 9001;
- Лицензия ФСБ на осуществление работ с использованием сведений, составляющих государственную тайну;
- Поставка специализированных компонентов (Xilinx, Altera, Analog Devices, Intersil, Interpoint, Microsemi, Aeroflex, Peregrine, Syfer, Eurofarad, Texas Instrument, Miteq, Cobham, E2V, MA-COM, Hittite, Mini-Circuits,General Dynamics и др.);

Помимо этого, одним из направлений компании «ЭлектроПласт» является направление «Источники питания». Мы предлагаем Вам помощь Конструкторского отдела:

- Подбор оптимального решения, техническое обоснование при выборе компонента;
- Подбор аналогов;
- Консультации по применению компонента;
- Поставка образцов и прототипов;
- Техническая поддержка проекта;
- Защита от снятия компонента с производства.

Как с нами связаться

Телефон: 8 (812) 309 58 32 (многоканальный)
Факс: 8 (812) 320-02-42
Электронная почта: org@eplast1.ru
Адрес: 198099, г. Санкт-Петербург, ул. Калинина, дом 2, корпус 4, литера А.