FineAdjust Applicator Specification Sheet Part No. 63901-4500

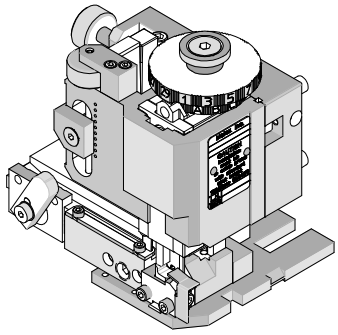

FEATURES

- Quick punch removal with the push of a button for fast and easy tooling change
- Applicator designed to industry standard mounting and shut height 135.80mm (5.346")
- Quick set-up time; plus the crimp height, track and feed adjustments can be set without removing the applicator from the press
- Fine adjustment allows users to achieve target with little effort by adjusting in increments of .015mm (.0006") for conductor crimp height and .063mm (.0025") for insulation height
- Independent adjustment rings allow users to quickly adjust the conductor or insulation crimp height without affecting each other
- Directly adapts to most automatic wire processing machines

SCOPE

Products: SL™ Crimp Terminal, Male, 28 AWG, 41 Stands/44 AWG Wire.

Terminal Series No.	Terminal Order No.		Wire Size		✕Insulation Diameter		Strip Length	
			AWG	mm²	mm	In.	mm	In.
70021	16-02-0077	40-08-0871	28	0.08	1.01-1.52	.040-.060	3.17-3.56	.125-.140
	16-02-0078	70021-0001						
	16-02-0091	70021-0004						
	16-02-0105	70021-0006						
✕ Special fine stranded wire may have an insulation diameter that is below the minimum insulation diameter specification. These wires will not produce a IPC/WHMA A620 crimp and is to be used at the customers own discretion.								

This applicator will produce satisfactory crimps, when used correctly with the properly prepared wire. Incorrectly prepared wire will produce strand out of the crimp.

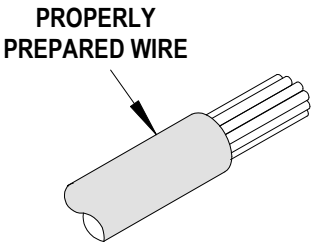

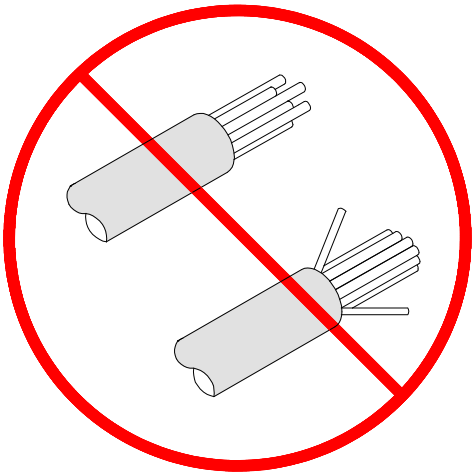

Note: Due to the delicate nature of this wire, care must be taken to gently touch the wire to the wire stop when crimping. The wire must be positioned directly above the terminal. Pushing the wire against the wire stop will result in strands out of the crimp. For semi-automatic crimping the operator may choose to lay the wire into the terminal for crimping.

DEFINITION OF TERMS

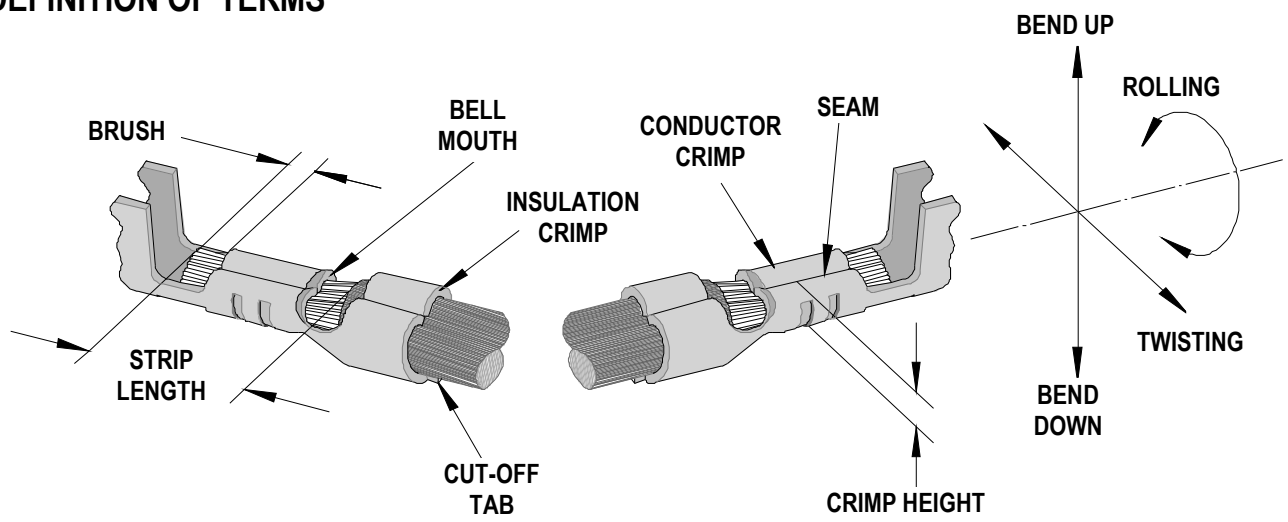

The above terminal drawing is a generic terminal representation. It is not an image of a terminal listed in the scope.

CRIMP SPECIFICATION

Terminal Series No.	Bell mouth		Cut-off Tab Maximum				Conductor Brush	
			Front		Rear			
	mm	In.	mm	In.	mm	In.	mm	In.
70021	0.20-0.50	.008-.020	0.13	.005	0.13	.005	0.00-1.00	.000-.039

Terminal Series No.	Bend up	Bend down	Twist	Roll	Punch Width mm (Ref)				Seam
	Degree		Degree		Conductor		Insulation		Seam shall not be open and no wire allowed out of the crimping area
					mm	In	mm	In	
70021	3	3	3	8	1.00	.039	1.60	.063	

After crimping, the conductor profile should measure the following.

Terminal Series No.	Wire Size		●Crimp Height		Pull Force Minimum	
	AWG	mm^2	mm	In.	N	Lb.
70021	28	0.08	0.74-0.79	.029-.031	8.9	2.0
●Special set-up for 41 strands / 44 AWG fine stranded wire. For standard stranded wire as UL1007, use FineAdjust Applicator 63900-3400.						

Pull Force should be measured with no influence from the insulation crimp.

The above specifications are guidelines to an optimum crimp.

PARTS LIST

FineAdjust Applicator 63901-4500				
Item	**Order No**	**Engineering No.**	**Description**	**Quantity**
Perishable Tooling				
	63901-4570	63901-4570	Tool Kit (All "Y" Items)	REF
1	63444-1018	63444-1018	Conductor Punch	1 Y
2	63445-1031	63445-1031	Conductor Anvil	1 Y
3	63446-1626	63446-1626	Insulation Punch	1 Y
4	63445-1630	63445-1630	Insulation Anvil	1 Y
5	63443-0003	63443-0003	Cut-Off Plunger	2 Y
6	63443-0012	63443-0012	Front Plunger Retainer	1 Y
7	63443-1402	63443-1402	Cut-off Die Blade	1 Y
8	63443-1002	63443-1002	Rear Plunger Retainer	1 Y
Other Components (REF 014550)				
9	11-17-0022	1739-21	Hold Down Spring	1
10	11-18-4083	60707-8	Feed Guide	1
11	11-24-1067	4996-4	Cut-Off Plunger Spring	2
12	11-40-4382	8341-8	Shank	1
13	63443-0025	63443-0025	Dual Carrier Key	1
14	63443-0090	63443-0090	Wire Stop	1
15	63443-1718	63443-1718	18.80mm Height Spacer	1
16	63443-2204	63443-2204	4.00mm Coarse Spacer	1
17	63443-2310	63443-2310	3.50mm Fine Spacer	1
18	63443-2802	63443-2802	Front Plunger Striker	1
19	63443-2908	63443-2908	Wire Hold Down Plunger	1
20	63443-3060	63443-3060	Rear Plunger Striker	1
21	63443-6111	63443-6111	Rear Cover	1
22	63600-0021	63600-0021	Wire Hold Down Spring	1
Frame				
23	63800-4901	63800-4901	Top	1
24	63801-3281	63801-3281	Base	1
25	63801-4650	63801-4650	Track	1
Hardware				
26	N/A	N/A	M3 by 6 Long SHCS	2**
27	N/A	N/A	M3 by 6 Long FHCS	1**
28	N/A	N/A	M4 by 6 Long SHCS	1**
29	N/A	N/A	M4 by 10 Long SHCS	2**
30	N/A	N/A	M4 by 12 Long BHCS	2**
31	N/A	N/A	M4 by 35 Long SHCS	1**
32	N/A	N/A	M4 by 50 Long SHCS	1**
33	N/A	N/A	M5 by 12 Long SHCS	1**
34	N/A	N/A	#10-32 by 3/8"Long Flat Point SSS	1**
35	N/A	N/A	#10-32 Hex Jam Nut	1**
** Available from an industrial supply company such as MSC (1-800-645-7270).				

Assembly Drawing

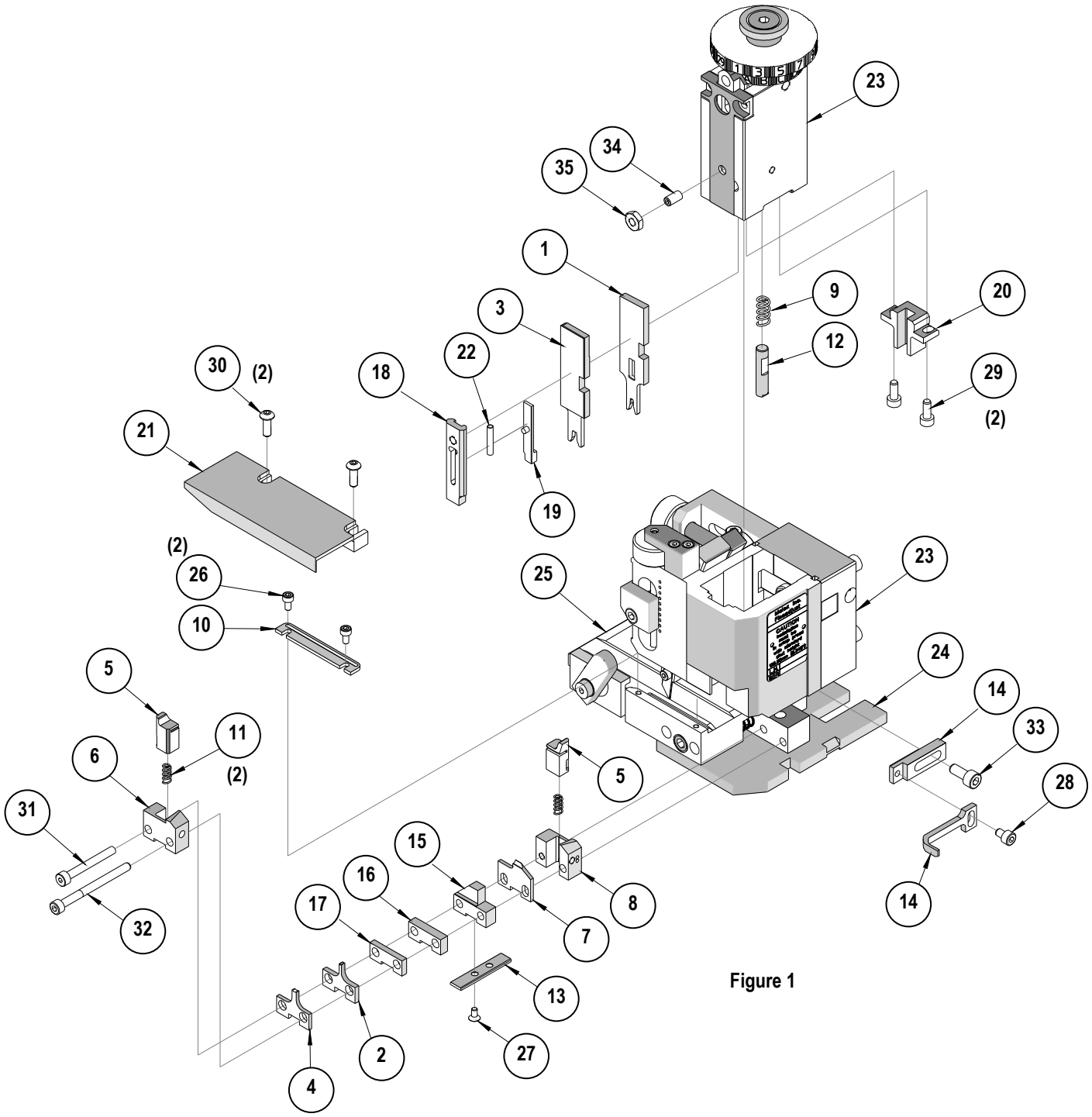

Figure 1

NOTES

1. Molex recommends an extra perishable tooling kit be maintained at your facility.
2. Verify tooling alignment by manually cycling the press and Applicator before crimping under power. Check that all screws are tight.
3. Slugs, Terminals, Dirt and Oil should be kept clear of work area.
4. Wear safety glasses at all times.
5. For recommended maintenance refer to the FineAdjust Manual.

CAUTION: This applicator should only be used in a press with a shut height of 135.80 mm (5.346”). Tooling damage could result at a lower setting.

CAUTION: To prevent injury never operate this Applicator without the guards supplied with the press or wire-processing machine in place. Reference the press or wire processing manufacturer’s instruction manual.

CAUTION: Molex crimp specifications are valid only when used with Molex terminals, applicators and tooling.

Americas Headquarters
Lisle, Illinois 60532 U.S.A.
1-800-78MOLEX
amerinfo@molex.com

Far East North Headquarters
Yamato, Kanagawa, Japan
81-462-65-2324
feninfo@molex.com

Far East South Headquarters
Jurong, Singapore
65-6-268-6868
fesinfo@molex.com

European Headquarters
Munich, Germany
49-89-413092-0
eurinfo@molex.com

Corporate Headquarters
2222 Wellington Ct.
Lisle, IL 60532 U.S.A.
630-969-4550
Fax: 630-969-1352

Visit our Web site at http://www.molex.com

Компания «ЭлектроПласт» предлагает заключение долгосрочных отношений при поставках импортных электронных компонентов на взаимовыгодных условиях!

Наши преимущества:

- Оперативные поставки широкого спектра электронных компонентов отечественного и импортного производства напрямую от производителей и с крупнейших мировых складов;
- Поставка более 17-ти миллионов наименований электронных компонентов;
- Поставка сложных, дефицитных, либо снятых с производства позиций;
- Оперативные сроки поставки под заказ (от 5 рабочих дней);
- Экспресс доставка в любую точку России;
- Техническая поддержка проекта, помощь в подборе аналогов, поставка прототипов;
- Система менеджмента качества сертифицирована по Международному стандарту ISO 9001;
- Лицензия ФСБ на осуществление работ с использованием сведений, составляющих государственную тайну;
- Поставка специализированных компонентов (Xilinx, Altera, Analog Devices, Intersil, Interpoint, Microsemi, Aeroflex, Peregrine, Syfer, Eurofarad, Texas Instrument, Miteq, Cobham, E2V, MA-COM, Hittite, Mini-Circuits,General Dynamics и др.);

Помимо этого, одним из направлений компании «ЭлектроПласт» является направление «Источники питания». Мы предлагаем Вам помощь Конструкторского отдела:

- Подбор оптимального решения, техническое обоснование при выборе компонента;
- Подбор аналогов;
- Консультации по применению компонента;
- Поставка образцов и прототипов;
- Техническая поддержка проекта;
- Защита от снятия компонента с производства.

Как с нами связаться

Телефон: 8 (812) 309 58 32 (многоканальный)
Факс: 8 (812) 320-02-42
Электронная почта: org@eplast1.ru
Адрес: 198099, г. Санкт-Петербург, ул. Калинина, дом 2, корпус 4, литера А.