Solid State Sensors
Current Sensors

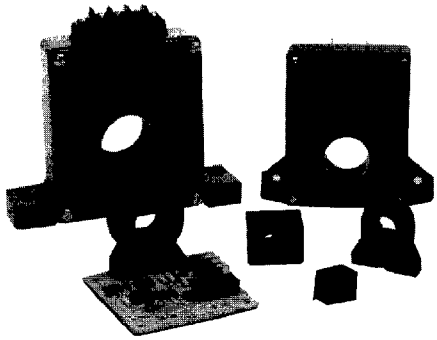

FEATURES
- Digital or linear output
- AC or DC current sensing
- Through-hole design
- Fast response time
- Output voltage isolation from input
- Minimum energy dissipation
- Maximum current limited only by conductor size
- Adjustable performance and built-in temperature compensation assures reliable operation
- Accurate, low cost sensing
- Operating temperature range –25 to 85°C

APPLICATION
- Variable speed motor controls
- Automotive diagnostics (battery drain detector)
- Ground fault detectors
- Motor overload protection
- Current monitoring of electric welders
- Ring transfer relay in telephone systems
- Energy management systems
- Protection of power semiconductors
- Control system diagnostics

OPERATION
MICRO SWITCH CS series solid state current sensors monitor either alternating (AC) or direct (DC) current. This series includes a wide assortment of devices ranging from digital output current detectors capable of sensing a few hundred milliamps to linear sensors capable of monitoring over one thousand amps. The entire family of CS current sensors provides a means of accurate low-cost current sensing.

If one of the following listings is close, but does not quite meet the application requirements, please contact your local MICRO SWITCH Sales Office. Our building block approach allows easy customization to meet most requirements.

Current sensors monitor current flow. Digital sensors produce a digital output signal. Linear sensors produce an analog output signal. When these signals have reached a predetermined level, the control system logic is instructed to perform a function. The digital signal with its logic level output may sound an alarm, start a motor, open a valve, or shut down a pump. The linear signal duplicates the waveform of the current being sensed and is ideal for use as a feedback element to control a motor or regulate the amount of work being done by a machine.

Some CS current sensors utilize a through-hole design. This feature insures that there will not be any DC insertion loss in the conductor. In addition, the through-hole design simplifies installation by eliminating the need for direct connection, which minimizes energy dissipation, and provides output isolation at no extra cost. MICRO SWITCH CS through-hole current sensors cannot be damaged by overcurrent.

Current sensing is accomplished by measuring the magnetic field surrounding a current-carrying conductor. The conductor is passed through the flux collector which concentrates the magnetic field at the sensing element. The magnetic field is directly proportional to the current passing through the conductor. Thus, there is a direct relationship between the output voltage of the current sensor and the level of input current. The waveform of this output voltage will track the waveform of the measured current. The through-hole design electrically isolates the sensor and insures that it will not be damaged by overcurrent or high voltage transients.

LINEAR CURRENT SENSORS
MICRO SWITCH CS series linear current sensors incorporate our 91SS12-2 and SS94A1 linear output Hall effect transducer (LOHET™). The sensing element is assembled in a printed circuit board mountable housing. This housing is available in four configurations (as shown in mounting dimension Figures 1, 1a, 2, and 2a on page 39). Normal mounting is with 0.375 inch long 4-40 screw and square nut (not provided) inserted in the housing. The combination of the sensor, flux collector, and housing comprises the holder assembly.

When sensing zero current the output voltage of the current sensor is approximately equal to one half of the supply voltage (Voffset – 0.5 Vcc). CS series linear current sensors will sense current in both directions. Current flow in one direction will cause the output voltage to increase from its offset value. Current flow in the opposite direction will cause the output voltage to decrease from its offset value. The output voltage range is from 25% of the supply voltage to 75% of the supply voltage (0.25 Vcc < Vo < 0.75 Vcc).

While sensing either AC or DC current, the linear output voltage will track the waveform of the sensed current.

The output of these devices can be adjusted by varying the supply voltage, varying the gap cut in the flux collector, or increasing the number of turns of the conductor passing through the center of the flux collector. Devices on page 35 are ratiometric.

ADJUSTABLE LINEAR CURRENT SENSORS
MICRO SWITCH offers two families of linear current sensors with adjustable offset voltage and sensitivity. Both families utilize the previously described linear current sensors mounted to a small printed circuit board containing additional circuitry. The adjustable feature enables the user to define the exact range of operation. The offset voltage and sensitivity are controlled by two trimpots soldered to the printed circuit board. These sensors are ratiometric.

DIGITAL CURRENT SENSORS
Each MICRO SWITCH CS series digital current sensor provides a logic level output that changes from approximately Vcc to 0.4 volts when the sensed current exceeds the operate point (the exception being the CSDB1CC which changes from 0.4 volts to Vcc when the operate point is exceeded). Each digital sensor will operate on AC or DC current, but the output will turn off at every zero crossing when sensing AC current.

Note: Operate and release currents are specified in Amps-Peak. When monitoring AC current using a digital sensor, peak values should be used. Multiply the RMS values by 1.414 to obtain the peak value.

INDUSTRIAL OUTPUT CURRENT SENSORS
Current sensors with industrial outputs easily interface with programmable controllers and other industrial control and monitoring devices. They have 4 to 20 mA or 1 to 5 VDC outputs and are packaged in a low-cost open PC board configuration or enclosed housings. These devices include a regulator. Therefore, they are not ratiometric.

CATALOG NUMBER SYSTEM

PLEASE NOTE: This matrix is intended **only** to aid you in identifying sensor catalog listings. It is not all-inclusive, and **must not be used** to form new listings.

Example: CSLA1CD

CS Current Sensors
Linear L
Digital D

A1 Holder – 9SS
A2 Holder – SS9
B1 9SS DC-DC Ratiometric Unregulated
B2 9SS AC-DC Ratiometric Unregulated
B3 9SS AC-AC Ratiometric Unregulated
B4 ALC DC-DC Ratiometric Unregulated
B5 ALC AC-DC Ratiometric Unregulated
B6 ALC AC-AC Ratiometric Unregulated
C2 9SS AC-DC 1-5 Unregulated
E1 9SS DC-DC 1-5 V Regulated
E2 9SS AC-DC 1-5 V Regulated
E3 9SS AC-AC 1-5 V Regulated
E4 ALC DC-DC 1-5 V Regulated
E5 ALC AC-DC 1-5 V Regulated
E6 ALC AC-AC 1-5 V Regulated
F1 9SS DC-DC 4-20 mA Regulated
F2 9SS AC-DC 4-20 mA Regulated
F3 9SS AC-AC 4-20 mA Regulated
F4 ALC DC-DC 4-20 mA Regulated
F5 ALC AC-DC 4-20 mA Regulated
F6 ALC AC-AC 4-20 mA Regulated

A PCB Small Holder
B PCB Medium Holder
C Small Holder
D Medium Holder
E Large Holder
F PCB Large Holder
G Small Sidemount
H Plastic Housing Small Opening
J Plastic Housing Large Opening
K Metal Housing
L PCB Small Sidemount

If 9SS		If SS9ALC		
			DC-DC	Other
A	14 Amps	C		24
B	16	D	57	72
C	33	E		92
D	57	F	114	125
E	75	G	148	150
F	100	H	245	235
G	120	J	250	310
H	150	K		400
J	225	L	490	550
K	325	M	604	765
L	625	N		950
		P	1208	
		Q		1500

HOW TO INTERPRET CURRENT SENSOR SPECIFICATIONS

The following definitions will help the user understand the characteristics of the MICRO SWITCH current sensor line.

Adjustable Operating Range — The adjustable linear current sensors give the user the option of changing the sensitivity according to the maximum sensed current of the application. The on-board sensitivity adjustment allows the user to alter the amplification of the Hall effect sensor, thereby adjusting the amount of sensed current needed to achieve maximum output voltage.

Example	Vcc – 12V
Voffset	–Vcc/2 – 6V
Vo maximum	–(75%)Vcc – 9V
Vspan available	–3V

Assume a current maximum of 45 amps is determined. The user would then apply 45 amps through the toroid and adjust the sensitivity where indicated until a 9 volt output is achieved. The sensitivity is then determined as (3V)/(45A) – 67mV/A. This design allows for maximum sensor flexibility.

For best results, choose a sensor to operate toward its maximum operate range. Increased amplification occurs when the sensor is adjusted toward its minimum operate range. Any circuit noise is also amplified.

Offset Shift — The offset shift refers to the effect of temperature on the offset voltage. It is defined as a percentage of reading per degree Celsius. Example: Offset voltage is 6.0V at 25°C. The offset shift is ±0.05%/°C. Therefore, the offset voltage at 35°C is 6.0V ± (0.05%/°C) (6.0V) (10°C) – 6.0V ± 0.03V. The offset shift due to temperature increases as the device is operated toward the temperature extremes.

Offset Voltage — The offset voltage is the voltage output when no current is flowing through the current carrying conductor. This is also known as the null voltage.

Operate Current — The operate current is the level of current required to cause a change in logic state from the state at no current flow. For example, the logic output is high at no current flow. When the current level is increased to the operate point, the logic output goes low.

Ratiometric — Characteristics vary in proportion to supply voltage.

Release Current — The release current is the level of current required to cause a change in logic state as the current flow decreases from the operate point.

NOTE: The CSDB1CC listing has positive logic output, current off, logic low, current on, and logic high. The other digital current detectors have inverse logic output.

Response Time (linear) — Measured from the time the input current reaches 90% of its full scale value to the time when the sensor output reaches 90% of final value. This assumes rise time of 1 microsecond or less on input.

Response Time (digital) — The length of time it takes the output to switch to within ten percent of the supply voltage from the negative supply after the rated operate point is reached on the input. Measured time will vary proportionally with the overdrive current.

Sensed Current (Amps Peak) — The SS94A1 and 91SS12-2 linear output Hall effect sensors have a maximum sensed range. The toroid (flux collector) in each holder assembly has a gap in which the sensor is placed. By varying the width of the gap (lg), the level of current that produces the amount of gauss necessary to saturate the sensor is varied. In otherwords, the maximum/minimum output of the Hall element will always be obtained at rated gauss excitation. The current level needed to achieve that maximum/minimum output depends on the width of the gap in the flux collector. Max sensed current is also affected by number of times sensed current wire is looped thru sensor hole. If max sensed current is 100 amps and current wire is looped thru hole twice, max sensed current drops to 50 amps. Looped 4 times it drops to 25 amps, 5 times to 20 amps.

Sensitivity – The change in sensor output to 1 amp change in input. Units are in units/NI where N is number of times sensed current wire is looped thru sensor hole. For example, if sensed current wire is looped thru hole twice then sensitivity doubles; looped thru 3 times, sensitivity triples, etc.

Temperature Range — The –25° to +85°C specified is the operating temperature range that the current sensor has been rated. The performance specifications are not considered to be valid outside the specified temperature range.

Solid State Sensors

CS Series

Series-Connect Digital Current Sensors

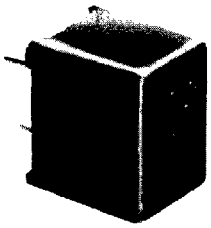

FEATURES
- Digital logic level output
- Miniature size
- Encapsulated for physical protection
- Interchangeability
- Accurate, low-cost sensing
- Printed circuit board mountable
- Transient protection provided on I.C.
- Fast response time
- Output voltage isolation from input
- 40 mA current sinking output

TYPICAL APPLICATIONS
- Motor overload protection
- Operations verification
- Power loss detection
- Monitoring

CS DIGITAL SENSORS
Series-connect current sensors produce a digital logic level output. When the current being sensed reaches a predetermined level, the output changes state.

Operating Principle: The sensor, wired in series with the current being sensed, detects the magnetic field surrounding a current-carrying conductor. This current path is passed through a flux collector inside the package, and the magnetic field is concentrated at the internal digital Hall effect sensing element. The magnetic field is proportional to the current passing through the conductor. Thus, there is a relationship between the output state of the current sensor and the level of current.

SERIES-CONNECT DIGITAL CURRENT SENSORS ORDER GUIDE, SINKING OUTPUT

Catalog Listing	Operate Current @ 25°C (Amps)	Release Current @ 25°C (Amps)	Max. Continuous Current (Amps)	Resist-ance (m Ohm)	Induct-ance (μH)	Supply Volt. (Volts DC)	Output Volt. (Volts)	Output Current (mA) Sinking	Response Time (μ Sec.)
CSDD1ED	3.5	2.6	10	8	7	4.5 to 24	0.4	40 mA	60
CSDD1EC	5.0	3.8	20	5	4	4.5 to 24	0.4	40 mA	60
CSDD1EE	6.5	4.9	20	4	4	4.5 to 24	0.4	40 mA	60
CSDD1EF	9.0	6.8	20	3	3	4.5 to 24	0.4	40 mA	60
CSDD1EG	10.0	7.6	20	3	3	4.5 to 24	0.4	40 mA	60
CSDD1EH	15.0	11.4	20	2	3	4.5 to 24	0.4	40 mA	60

MOUNTING DIMENSIONS
(For reference only)

Key:
0,00=mm
0.00=in.

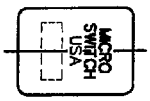

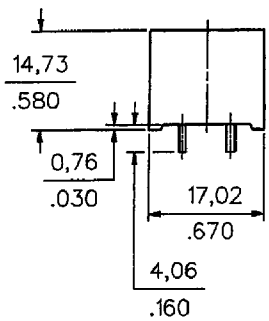

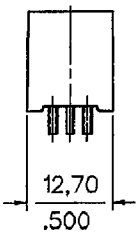

SUGGESTED HOLE CENTERS

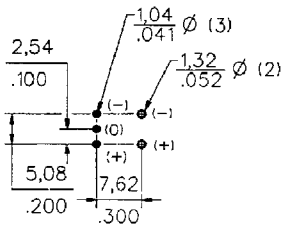

View from component side of printed circuit board.

Solid State Sensors
Digital Current Sensors

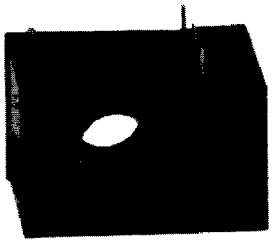

FEATURES
- Digital output
- AC or DC current sensing
- Through-hole design
- Fast response time
- Output voltage isolation from input
- Minimum energy dissipation
- Maximum current limited only by conductor size
- Accurate, low cost sensing
- Operating temperature range –25 to 85°C

Digital Current Sensors
Each MICRO SWITCH CS series digital current sensor provides a logic level output that changes from approximately Vcc to 0.4 volts when the sensed current exceeds the operate point (the exception being the CSDB1CC which changes from 0.4 volts to Vcc when the operate point is exceeded). Each digital sensor will operate on AC or DC current, but the output will turn off at every zero crossing when sensing AC current.

DIGITAL CURRENT DETECTORS ORDER GUIDE, SINKING OUTPUT

Catalog Listings	Pinout Style	Operate Current @ 25°C (Amp-Turns)			Operate Current –25°C to +85°C (Amp-Turns)	Release Current –25–C to +85–C (Amp-Turns Min.)	Supply Volt. (Volts DC)	Output Volt. (Volts)	Output Current (mA) Sinking	Response Time (μ Sec.)
		Min.	Nom.	Max.						
CSDA1BA	2	0.32	0.50	0.88	.25 to 1.0	0.08	6 to 16	0.4	20mA	100
CSDA1BC	2	2.2	3.5	6.5	1.7 to 7.5	0.60	6 to 16	0.4	20mA	100
CSDC1BA	2	0.32	0.50	0.88	.25 to 1.0	0.08	5 ± 0.2	0.4	20mA	100
CSDC1BC	2	2.2	3.5	6.5	1.7 to 7.5	0.60	5 ± 0.2	0.4	20mA	100
CSDA1AA	1	0.32	0.50	0.88	.25 to 1.0	0.08	6 to 16	0.4	20mA	100
CSDA1AC	1	2.2	3.5	6.5	1.7 to 7.5	0.60	6 to 16	0.4	20mA	100
CSDC1AA	1	0.32	0.50	0.88	.25 to 1.0	0.08	5 ± 0.2	0.4	20mA	100
CSDC1AC	1	2.2	3.5	6.5	1.7 to 7.5	0.60	5 ± 0.2	0.4	20mA	100
CSDC1DA	3	0.32	0.50	0.88	.25 to 1.0	0.08	5 ± 0.2	0.4	20mA	100
CSDA1DA	3	0.32	0.50	0.88	.25 to 1.0	0.08	6 to 16	0.4	20mA	100
CSDC1DC	3	2.2	3.5	6.5	1.7 to 7.5	0.60	5 ± 0.2	0.4	20mA	100
CSDA1DC	3	2.2	3.5	6.5	1.7 to 7.5	0.60	6 to 16	0.4	20mA	100

* The CSDB1CC has positive logic output, current off, logic low, current on, logic high.

MOUNTING DIMENSIONS (for reference only)

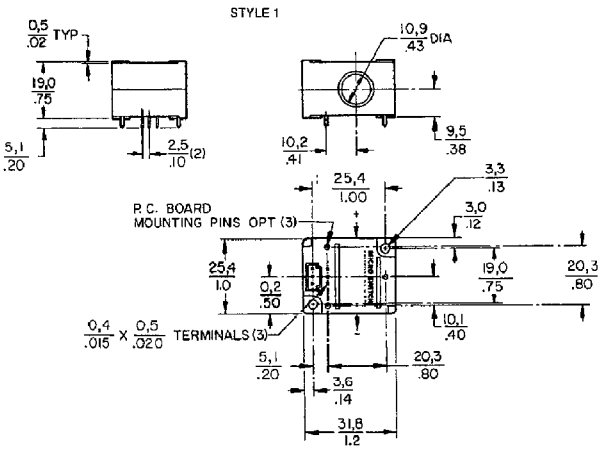

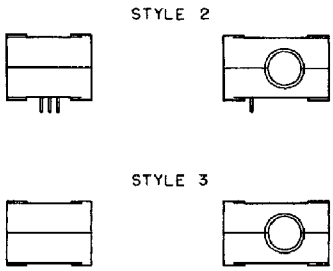

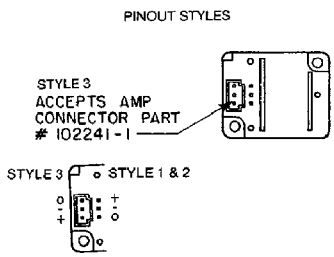

Solid State Sensors
Linear Current Sensors

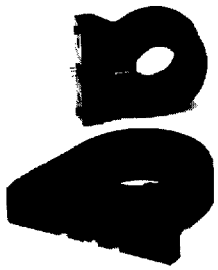

FEATURES
- Linear output
- AC or DC current sensing
- Through-hole design
- Fast response time
- Output voltage isolation from input
- Minimum energy dissipation
- Maximum current limited only by conductor size
- Adjustable performance and built-in temperature compensation assures reliable operation
- Accurate, low cost sensing
- Operating temperature range −25 to 85°C

LINEAR CURRENT SENSORS

MICRO SWITCH CS series linear current sensors incorporate our 91SS12-2 and SS94A1 linear output Hall effect transducer (LOHET™). The sensing element is assembled in a printed circuit board mountable housing. This housing is available in four configuration as shown in mounting dimension figures 1, 1a, 2 and 2a. Normal mounting is with 0.375 inch long 4-40 screw and square nut (not provided) inserted in the housing. The combination of the sensor, flux collector, and housing comprises the holder assembly. These sensors are ratiometric.

ORDER GUIDE — BOTTOM MOUNT WITH 9SS SENSOR, SOURCE OUTPUT

Catalog Listing	Mtg. Dim. Fig.	Supply Volt. (Volts DC)	Supply Current (mA Max.)	Sensed Current (Amps Peak)	Offset Volt. (Volts±10%)	Sensitivity mV/NI At 12 VDC		Offset Shift (%/°C)	Response Time (μ Sec.)
						Nominal	± TOL		
CSLA1CD	1	8 to 16	19	57	Vcc/2	49.6	5.8	±.05	3
CSLA1CE	1	8 to 16	19	75	Vcc/2	39.4	4.4	±.05	3
CSLA1DE	2	8 to 16	19	75	Vcc/2	39.1	4.8	±.05	3
CSLA1CF	1	8 to 16	19	100	Vcc/2	29.7	2.7	±.05	3
CSLA1DG	2	8 to 16	19	120	Vcc/2	24.6	2.1	±.05	3
CSLA1CH	1	8 to 16	19	150	Vcc/2	19.6	1.8	±.05	3
CSLA1DJ	2	8 to 16	19	225	Vcc/2	13.2	1.2	±.05	3
CSLA1EJ	1a	8 to 16	19	225	Vcc/2	13.2	1.5	±.05	3
CSLA1DK	2	8 to 16	19	325	Vcc/2	9.1	1.7	±.05	3
CSLA1EK	1a	8 to 16	19	325	Vcc/2	9.4	1.3	±.05	3
CSLA1EL	1a	8 to 16	19	625	Vcc/2	5.6	1.3	±.05	3

BOTTOM MOUNT WITH SS9 SENSOR, SINK/SOURCE OUTPUT*

Catalog Listing	Mtg. Dim. Fig.	Supply Volt. (Volts DC)	Supply Current (mA Max.)	Sensed Current (Amps Peak)	Offset Volt. (Volts±2%)	Sensitivity mV/NI At 8 VDC		Offset Shift (%/°C)	Response Time (μ Sec.)
						Nominal	± TOL		
CSLA2CD	1	6 to 12	20	72	Vcc/2	32.7	3.0	±.02	3
CSLA2CE	1	6 to 12	20	92	Vcc/2	26.1	2.1	±.02	3
CSLA2DE	2	6 to 12	20	92	Vcc/2	25.6	2.2	±.02	3
CSLA2CF	1	6 to 12	20	125	Vcc/2	19.6	1.3	±.02	3
CSLA2DG	2	6 to 12	20	150	Vcc/2	16.2	1.1	±.02	3
CSLA2DJ	2	6 to 12	20	225	Vcc/2	8.7	0.6	±.020	3
CSLA2DH	2	6 to 12	20	235	Vcc/2	9.8	1.1	±.0125	3
CSLA2EJ	1a	6 to 12	20	310	Vcc/2	7.6	0.7	±.0125	3
CSLA2DK	2	6 to 12	20	400	Vcc/2	5.8	0.5	±.0125	3
CSLA2EL	1a	6 to 12	20	550	Vcc/2	4.3	0.4	±.0125	3
CSLA2EM	1a	6 to 12	20	765	Vcc/2	3.1	0.3	±.007	3
CSLA2EN	1a	6 to 12	20	950	Vcc/2	2.3	0.2	±.007	3

NOTE: When monitoring purely AC current with zero DC component, a capacitor can be inserted in series with the output of the current sensor. The capacitor will block out the effect of the temperature variation of the offset voltage which increases the accuracy of the device.

Solid State Sensors
Linear Current Sensors

SIDE MOUNT WITH 9SS SENSOR, SOURCE OUTPUT

Catalog Listing	Mtg. Dim. Fig.	Supply Volt. (Volts DC)	Supply Current (mA Max.)	Current (Amps Peak)	Sensed Offset Volt. (Volts±10%)	Sensitivity mV/NI At 12 VDC Nominal	Sensitivity mV/NI At 12 VDC ± TOL	Offset Shift (%/°C)	Response Time (μ Sec.)
CSLA1GD	2a	8 to 16	19	57	Vcc/2	49.6	5.8	±.05	3
CSLA1GE	2a	8 to 16	19	75	Vcc/2	39.4	4.4	±.05	3
CSLA1GF	2a	8 to 16	19	100	Vcc/2	29.7	2.7	±.05	3

SIDE MOUNT WITH SS9 SENSOR, SINK/SOURCE OUTPUT*

Catalog Listing	Mtg. Dim. Fig.	Supply Volt. (Volts DC)	Supply Current (mA Max.)	Sensed Current (Amps Peak)	Offset Volt. (Volts±2%)	Sensitivity mV/NI At 8 VDC Nominal	Sensitivity mV/NI At 8 VDC ± TOL	Offset Shift (%/°C)	Response Time (μ Sec.)
CSLA2GD	2a	6 to 12	20	72	Vcc/2	32.7	3.0	±.02	8
CSLA2GE	2a	6 to 12	20	92	Vcc/2	26.1	2.1	±.02	8
CSLA2GF	2a	6 to 12	20	125	Vcc/2	19.6	1.3	±.02	8
CSLA2GG	2a	6 to 12	20	150	Vcc/2	12.7	0.6	±.02	8

NOTE: When monitoring purely AC current with zero DC component, a capacitor can be inserted in series with the output of the current sensor. The capacitor will block out the effect of the temperature variation of the offset voltage which increases the accuracy of the device.

MOUNTING DIMENSIONS (for reference only)

Figure 1

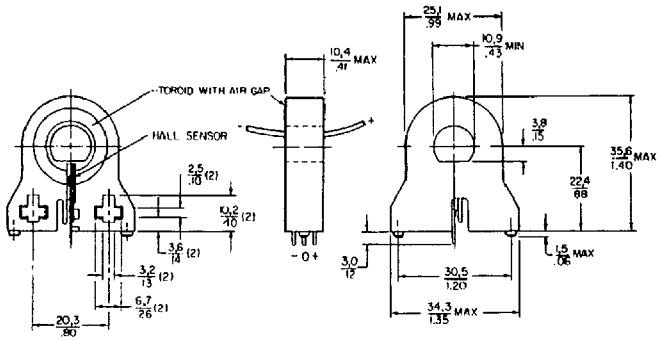

Figure 2

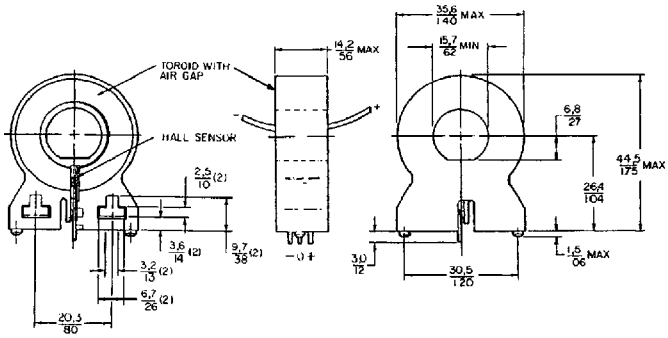

Figure 1a

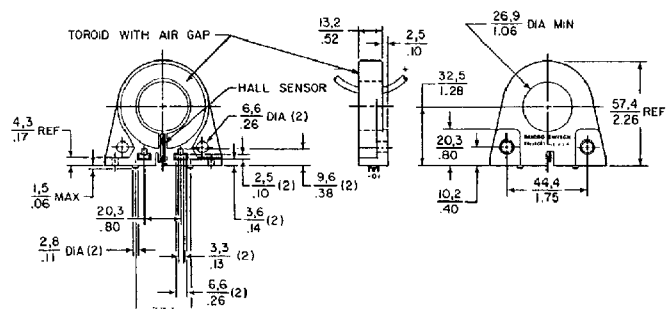

Figure 2a

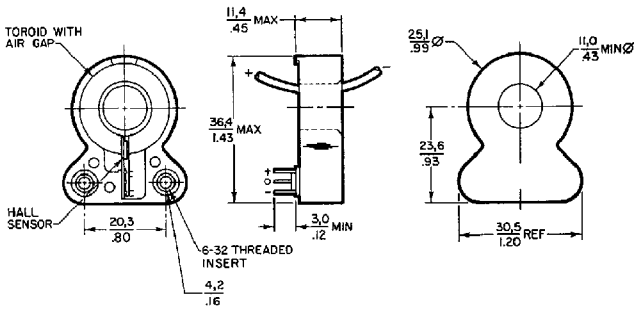

* Application consideration: The output is clamped at the high end. Clamping voltage may be as low as 9VDC. The output will not exceed the clamping voltage regardless of field strength or supply voltage.

Компания «ЭлектроПласт» предлагает заключение долгосрочных отношений при поставках импортных электронных компонентов на взаимовыгодных условиях!

Наши преимущества:

- Оперативные поставки широкого спектра электронных компонентов отечественного и импортного производства напрямую от производителей и с крупнейших мировых складов;
- Поставка более 17-ти миллионов наименований электронных компонентов;
- Поставка сложных, дефицитных, либо снятых с производства позиций;
- Оперативные сроки поставки под заказ (от 5 рабочих дней);
- Экспресс доставка в любую точку России;
- Техническая поддержка проекта, помощь в подборе аналогов, поставка прототипов;
- Система менеджмента качества сертифицирована по Международному стандарту ISO 9001;
- Лицензия ФСБ на осуществление работ с использованием сведений, составляющих государственную тайну;
- Поставка специализированных компонентов (Xilinx, Altera, Analog Devices, Intersil, Interpoint, Microsemi, Aeroflex, Peregrine, Syfer, Eurofarad, Texas Instrument, Miteq, Cobham, E2V, MA-COM, Hittite, Mini-Circuits,General Dynamics и др.);

Помимо этого, одним из направлений компании «ЭлектроПласт» является направление «Источники питания». Мы предлагаем Вам помощь Конструкторского отдела:

- Подбор оптимального решения, техническое обоснование при выборе компонента;
- Подбор аналогов;
- Консультации по применению компонента;
- Поставка образцов и прототипов;
- Техническая поддержка проекта;
- Защита от снятия компонента с производства.

Как с нами связаться

Телефон: 8 (812) 309 58 32 (многоканальный)
Факс: 8 (812) 320-02-42
Электронная почта: org@eplast1.ru
Адрес: 198099, г. Санкт-Петербург, ул. Калинина, дом 2, корпус 4, литера А.