ISL32740E

Isolated 40Mbps RS-485 PROFIBUS Transceiver

FN8857
Rev.4.00
Nov 30, 2017

The ISL32740E is a galvanically isolated high-speed differential bus transceiver, designed for bidirectional data communication on balanced transmission lines. The device uses Giant Magnetoresistance (GMR) as its isolation technology.

The part is available in a 16 Ld QSOP package offering unprecedented miniaturization, and in a 16 Ld SOICW package providing a true 8mm creepage distance.

The ISL32740E is PROFIBUS compliant, including the rigorous PROFIBUS differential output voltage specifications.

A unique ceramic/polymer composite barrier provides excellent isolation and 44,000 years of barrier life.

The device is compatible with 3V as well as 5V input supplies, allowing an interface to standard microcontrollers without additional level shifting.

Current limiting and thermal shutdown features protect against output short circuits and bus contention that may cause excessive power dissipation. Receiver inputs are a full fail-safe design, ensuring a logic high R-output if A/B are floating or shorted.

Applications

- PROFIBUS-DP and RS-485 networks
- Factory automation
- Building environmental control systems
- Industrial/process control networks
- Equipment covered under IEC 61010-1 Edition 3

Features

- 40Mbps data rate
- 2.5kV$_{RMS}$ isolation/600V$_{RMS}$ working voltage
- 3V to 5V power supplies
- 20ns propagation delay
- 5ns pulse skew
- 50kV/µs (typical), 30kV/µs (minimum) common-mode transient immunity
- 15kV ESD protection
- Low EMC footprint
- Thermal shutdown protection
- Temperature ranges available
  - -40°C to +85°C (EIBZ)
  - -40°C to +125°C (EFBZ)
- Meets or exceeds ANSI RS-485 and ISO 8482:1987(E)
- PROFIBUS compliant
- 16 Ld QSOP or 0.3” true 8mm 16 Ld SOICW packages
- UL 1577 recognized
- VDE V 0884-10 certified

Related Literature

- For a full list of related documents, visit our website
  - ISL32740E product page

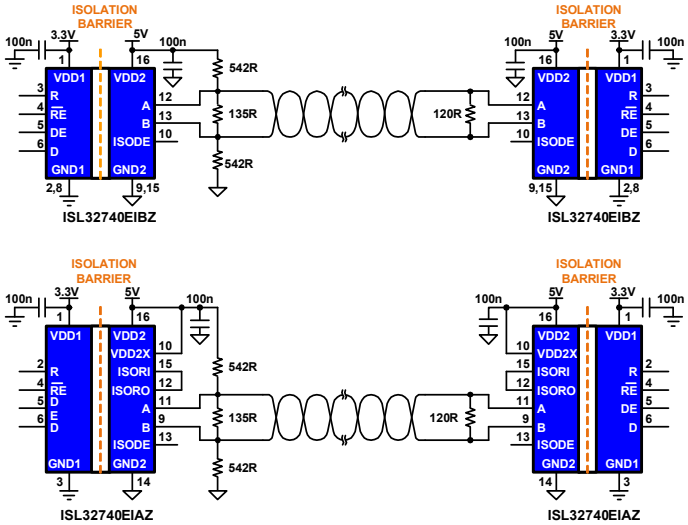

Figure 1. Typical PROFIBUS Application

1. Overview

1.1 Typical Operating Circuits

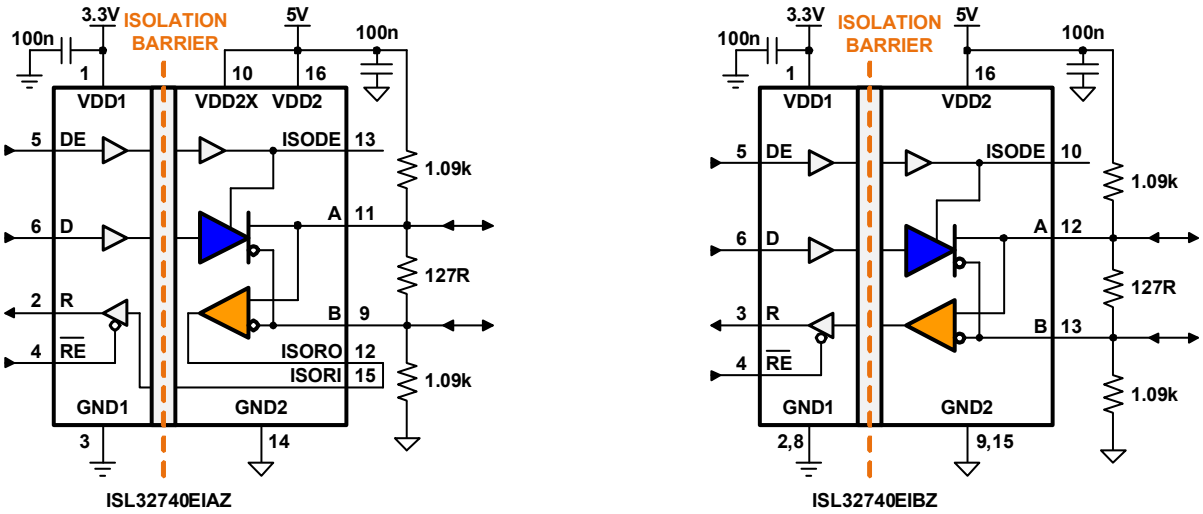

Figure 2. Typical Operating Circuits

1.2 Ordering Information

Part Number (Notes 3, 4)	Part Marking	Temp. Range (°C)	Package (RoHS Compliant)	Pkg. Dwg. #
ISL32740EIBZ (Note 1)	32740EIBZ	-40 to +85	16 Ld SOICW	M16.3A
ISL32740EFBZ (Note 1)	32740EFBZ	-40 to +125	16 Ld SOICW	M16.3A
ISL32740EIAZ (Note 2)	32740EIAZ	-40 to +85	16 Ld QSOP	M16.15B
ISL32740EVAL1Z	Evaluation board for ISL32740EIBZ			
ISL32740EVAL2Z	Evaluation board for ISL32740EIAZ			

Notes:
1. Add “-T” suffix for 1k unit or “-T7A” suffix for 250 unit tape and reel options. Refer to TB347 for details on reel specifications.
2. Add “-T” suffix for 2.5k unit or “-T7A” suffix for 250 unit tape and reel options. Refer to TB347 for details on reel specifications.
3. Intersil Pb-free plus anneal products employ special Pb-free material sets; molding compounds/die attach materials and 100% matte tin plate termination finish, which are RoHS compliant and compatible with both SnPb and Pb-free soldering operations. Intersil Pb-free products are MSL classified at Pb-free peak reflow temperatures that meet or exceed the Pb-free requirements of IPC/JEDEC J STD-020.
4. For Moisture Sensitivity Level (MSL), see the product information page for the ISL32740E. For more information on MSL, see TB363.

Table 1. Key Differences Between Family of Parts

Part Number	Full/Half Duplex	V_{DD1} (V)	V_{DD2} (V)	Data Rate (Mbps)	Isolation Voltage (kV_{RMS})
ISL32704E	Half	3.0 – 5.5	4.5 – 5.5	4	2.5
ISL32705E	Full	3.0 – 5.5	4.5 – 5.5	4	2.5
ISL32740E	Half	3.0 – 5.5	4.5 – 5.5	40	2.5
ISL32741E	Half	3.0 – 5.5	4.5 – 5.5	40	6

1.3 Pin Configurations

ISL32740E
(16 Ld SOICW)
Top View

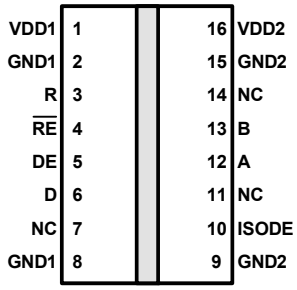

ISL32740E
(16 Ld QSOP)
Top View

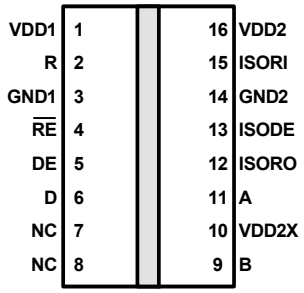

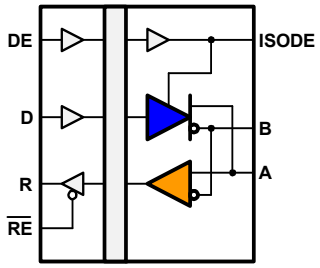

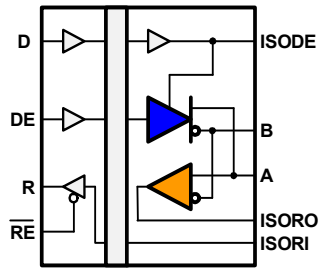

1.4 Truth Tables

Transmitting					
Inputs			Outputs		
$\overline{RE}$	DE	D	ISODE	B	A
X	1	1	1	0	1
X	1	0	1	1	0
0	0	X	0	High-Z	High-Z
1	0	X	0	High-Z*	High-Z*

Receiving			
Inputs			Output
$\overline{RE}$	DE	A-B	RO
0	0	$V_{AB} \geq -0.05V$	1
0	0	$-0.05 > V_{AB} > -0.2V$	Undetermined
0	0	$V_{AB} \leq -0.2V$	0
0	0	Inputs Open/Shorted	1
1	1	X	High-Z
1	0	X	High-Z*

Note: *Transceiver shutdown mode

1.5 Pin Descriptions

Pin Number		Pin Name	Function
16 Ld SOICW	16 Ld QSOP		
1	1	VDD1	Input power supply.
3	2	R	Receiver output: If A-B ≥-50mV, R is high; If A-B ≤-200mV, R is low; R = High if A and B are unconnected (floating) or shorted, or connected to a terminated bus that is not driven.
2, 8	3	GND1	Input power supply ground return. Pin 2 is internally connected to Pin 8 (for SOIC package).
4	4	$\overline{RE}$	Receiver output enable. R is enabled when $\overline{RE}$ is low; R is high impedance when $\overline{RE}$ is high. If the Rx enable function is not required, connect $\overline{RE}$ directly to GND1.
5	5	DE	Driver output enable. The driver outputs, A and B, are enabled by bringing DE high. They are high impedance when DE is low. If the Tx enable function is not required, connect DE to VDD1 through a 1kΩ or greater resistor.
6	6	D	Driver input. A low on D forces output A low and output B high. Similarly, a high on D forces output A high and output B low.
7, 11, 14	7, 8	NC	No internal connection.
12	11	A	±15kV IEC61000 ESD protected RS-485/RS422 level, noninverting receiver input if DE = 0 and noninverting driver output if DE = 1.
13	9	B	±15kV IEC61000 ESD protected RS-485/RS422 level, inverting receiver input if DE = 0 and inverting driver output if DE = 1.
-	10	VDD2X	Transceiver power supply. Connect to VDD2 (Pin 16).
-	12	ISORO	Isolated receiver output. This pin must be connected to Pin 15.
-	15	ISORI	Isolated receiver input. This pin must be connected to Pin 12.
9, 15	14	GND2	Output power supply ground return. Dual ground pins are connected internally.
10	13	ISODE	Isolated DE output for use in PROFIBUS applications where the state of the isolated drive enable node needs to be monitored.
16	16	VDD2	Output power supply.

2. Specifications

2.1 Absolute Maximum Ratings

Parameter (Note 5)	Minimum	Maximum	Unit
Supply Voltages (Note 8)			
VDD1 to GND1	-0.5	+7	V
VDD2 to GND2		7	V
Input Voltages D, DE, $\overline{RE}$	-0.5	VDD1 + 0.5	V
Input/Output Voltages			
A, B	-9	+13	V
R	-0.5	VDD1 + 1	V
Short-Circuit Duration A, B	Continuous		V
ESD Rating	See “Electrical Specifications” table on page 7		

Note:
5. Absolute Maximum specifications mean the device will not be damaged if operated under these conditions. It does not guarantee performance.

CAUTION: Do not operate at or near the maximum ratings listed for extended periods of time. Exposure to such conditions may adversely impact product reliability and result in failures not covered by warranty.

2.2 Thermal Information

Thermal Resistance (Typical)	θ_{JA} (°C/W)	θ_{JC} (°C/W)
16 Ld SOICW Package (Notes 6, 7)	43	20
16 Ld QSOP Package (Notes 6, 7)	77	41

Notes:
6. θ_{JA} is measured in free air with the component soldered to a double-sided board.
7. For θ_{JC}, the “case temp” location is the center of the package top side.

Parameter	Minimum	Maximum	Unit
Maximum Junction Temperature (Plastic Package)	-55	+150	°C
Maximum Storage Temperature Range	-55	+150	°C
Maximum Power Dissipation		800	mW
Pb-Free Reflow Profile	see TB493		

2.3 Recommended Operation Conditions

Parameter		Minimum	Maximum	Unit
Supply Voltages				
V_{DD1}		3.0	5.5	V
V_{DD2}		4.5	5.5	V
High-Level Digital Input Voltage, V_{IH}				
V_{DD1} = 3.3V		2.4	V_{DD1}	V
V_{DD1} = 5.0V		3.0	V_{DD1}	V
Low-Level Digital Input Voltage, V_{IL}		0	0.8	V

Parameter		Minimum	Maximum	Unit
Differential Input Voltage (Note 9), V_{ID}		-7	12	V
High-Level Output Current (Driver), I_{OH}			60	mA
High-Level Digital Output Current (Receiver), I_{OH}			8	mA
Low-Level Output Current (Driver), I_{OL}			-60	mA
Low-Level Digital Output Current (Receiver), I_{OL}			-8	mA
Junction Temperature, T_J		-40	+110	°C
Ambient Operating Temperature, T_A	ISL32740EIBZ, ISL32740EIAZ	-40	+85	°C
	ISL32740EFBZ	-40	+125	
Digital Input Signal Rise and Fall Times, t_{IR}, t_{IF}			DC Stable	

2.4 Electrical Specifications

Test conditions: T_{min} to T_{max}, V_{DD1} = V_{DD2} = 4.5V to 5.5V; unless otherwise stated. (Note 8)

Parameter	Symbol	Test Conditions		Min	Typ (Note 12)	Max	Unit
DC Characteristics							
Driver Line Output Voltage (V_A, V_B) (Note 8)	V_O	No load		-	-	V_{DD2}	V
Driver Differential Output Voltage (Note 9)	V_{OD1}	No load		-	-	V_{DD2}	V
Driver Differential Output Voltage (Note 9)	V_{OD2}	R_L = 54Ω		2.1	2.8	V_{DD2}	V
Driver Differential Output Voltage (Notes 9, 13)	V_{OD3}	R_L = 60Ω		1.9	2.7	-	V
Change in Magnitude of Differential Output Voltage (Note 14)	ΔV_{OD}	R_L = 54Ω or 100Ω		-	0.01	0.20	V
Driver Common-Mode Output Voltage	V_{OC}	R_L = 54Ω or 100Ω		-	-	3	V
Change in Magnitude of Driver Common-Mode Output Voltage (Note 14)	ΔV_{OC}	R_L = 54Ω or 100Ω		-	0.01	0.20	V
Bus Input Current (A, B) (Notes 11, 15)	I_{IN2}	DE = 0V	V_{IN} = 12V		-	220	µA
			V_{IN} = -7V	-160			µA
High-Level Input Current (DI, DE, $\overline{RE}$)	I_{IH}	V_I = 3.5V		-	-	10	µA
Low-Level Input Current (DI, DE, $\overline{RE}$)	I_{IL}	V_I = 0.4V		-10	-	-	µA
Absolute Short-Circuit Output Current	I_{OS}	DE = V_{DD1}, -7V ≤ V_A or V_B ≤ 12V		-	-	±250	mA
Supply Current	I_{DD1}	V_{DD1} = 5V		-	4	6	mA
		V_{DD1} = 3.3V		-	3	4	mA
Positive-Going Input Threshold Voltage	V_{TH+}	-7V ≤ V_{CM} ≤ 12V		-	-	-50	mV
Negative-Going Input Threshold Voltage	V_{TH-}	-7V ≤ V_{CM} ≤ 12V		-200	-	-	mV
Receiver Input Hysteresis	V_{HYS}	V_{CM} = 0V		-	28	-	mV
Differential Bus Input Capacitance	C_D			-	9	12	pF
Receiver Output High Voltage	V_{OH}	I_O = -20µA, V_{ID} = -50mV		V_{CC} - 0.2	-	-	V
Receiver Output Low Voltage	V_{OL}	I_O = +20µA, V_{ID} = -200mV		-	-	0.2	V
High impedance Output Current	I_{OZ}	0.4V ≤ V_O ≤ (V_{DD2} - 0.5)		-1	-	1	µA
Receiver Input Resistance	R_{IN}	-7V ≤ V_{CM} ≤ 12V		54	80	-	kΩ
Supply Current	I_{DD2}	DE = V_{DD1}, no load		-	5	16	mA

Test conditions: T_{min} to T_{max}, V_{DD1} = V_{DD2} = 4.5V to 5.5V; unless otherwise stated. (Note 8) **(Continued)**

Parameter	Symbol	Test Conditions	Min	Typ (Note 12)	Max	Unit
ESD Performance						
RS-485 Bus Pins (A, B)		IEC61000-4-2, air-gap discharge to GND2	-	±15	-	kV
		IEC61000-4-2, contact discharge to GND2	-	±8	-	kV
		Human Body Model discharge (HBM) to GND2	-	±16.5	-	kV
All Pins (R, $\overline{RE}$, D, DE)		Human Body Model discharge (HBM) to GND1	-	±2	-	kV
Switching Characteristics						
V_{DD1} = 5V, V_{DD2} = 5V						
Data Rate	DR	R_L = 54Ω, C_L = 50pF	40	-	-	Mbps
Propagation Delay (Notes 9, 16)	t_{PD}	V_O = -1.5V to 1.5V, C_L = 15pF	-	20	30	ns
Pulse Skew (Notes 9, 17)	t_{SK} (P)	V_O = -1.5V to 1.5V, C_L = 15pF	-	1	5	ns
Skew Limit (Note 10)	t_{SK} (LIM)	R_L = 54Ω, C_L = 50pF	-	2	10	ns
Output Enable Time to High Level	t_{PZH}	C_L = 15pF	-	15	30	ns
Output Enable Time to Low Level	t_{PZL}	C_L = 15pF	-	15	30	ns
Output Disable Time from High Level	t_{PHZ}	C_L = 15pF	-	15	30	ns
Output Disable Time from Low Level	t_{PLZ}	C_L = 15pF	-	15	30	ns
Common-Mode Transient Immunity	CMTI	V_{CM} = 1500 V_{DC}, $t_{TRANSIENT}$ = 25ns	30	50	-	kV/µs
V_{DD1} = 3.3V, V_{DD2} = 5V						
Data Rate	DR	R_L = 54Ω, C_L = 50pF	40	-	-	Mbps
Propagation Delay (Notes 9, 3)	t_{PD}	V_O = -1.5V to 1.5V, C_L = 15pF	-	25	35	ns
Pulse Skew (Notes 9, 4)	t_{SK} (P)	V_O = -1.5V to 1.5V, C_L = 15pF	-	2	5	ns
Skew Limit (Note 10)	t_{SK} (LIM)	R_L = 54Ω, C_L = 50pF	-	4	10	ns
Output Enable Time to High Level	t_{PZH}	C_L = 15pF	-	17	30	ns
Output Enable Time to Low Level	t_{PZL}	C_L = 15pF	-	17	30	ns
Output Disable Time from High Level	t_{PHZ}	C_L = 15pF	-	17	30	ns
Output Disable Time from Low Level	t_{PLZ}	C_L = 15pF	-	17	30	ns
Common-Mode Transient Immunity	CMTI	V_{CM} = 1500 V_{DC}, $t_{TRANSIENT}$ = 25ns	30	50	-	kV/µs

Notes: (apply to both driver and receiver sections)

8. All voltages on the isolator primary side are with respect to GND1. All line voltages and common-mode voltages on the isolator secondary or bus side are with respect to GND2.
9. Differential I/O voltage is measured at the noninverting bus Terminal A with respect to the inverting Terminal B.
10. Skew limit is the maximum propagation delay difference between any two devices at +25°C.
11. The power-off measurement in ANSI Standard EIA/TIA-422-B applies to disabled outputs only and is not applied to combined inputs and outputs.
12. All typical values are at V_{DD1}, V_{DD2} = 5V or V_{DD1} = 3.3V and T_A = +25°C.
13. -7V < V_{CM} < 12V; 4.5 < V_{DD} < 5.5V.
14. ΔV_{OD} and ΔV_{OC} are the changes in magnitude of ΔV_{OD} and ΔV_{OD} respectively, that occur when the input is changed from one logic state to the other.
15. This applies for both power-on and power-off; refer to ANSI standard RS-485 for the exact condition. The EIA/TIA-422 -B limit does not apply for a combined driver and receiver terminal.
16. Includes 10ns read enable time. Maximum propagation delay is 25ns after read assertion.
17. Pulse skew is defined as $|t_{PLH} - t_{PHL}|$ of each channel.

2.5 Insulation Specifications

Parameter	Symbol	Test Conditions		Min	Typ	Max	Unit
Creepage Distance (external)		Per IEC 60601	SOICW	8.03	8.3	-	mm
			QSOP	3.2	-	-	mm
Total Barrier Thickness (internal)				-	13	-	µm
Barrier Resistance	R_{IO}	500V		-	$>10^{14}$	-	Ω
Barrier Capacitance	C_{IO}	f = 1MHz		-	7	-	pF
Leakage Current		$240V_{RMS}$, 60Hz		-	0.2	-	$µA_{RMS}$
Comparative Tracking Index	CTI	Per IEC 60112		≥600	-	-	V_{RMS}
High Voltage Endurance (Maximum Barrier Voltage for Indefinite Life)	V_{IO}	At maximum operating temperature		1000	-	-	V_{RMS}
				1500	-	-	V_{DC}
Barrier Life		100°C, $1000V_{RMS}$, 60% CL activation energy		-	44000	-	Years

2.6 Magnetic Field Immunity

Parameter (Note 18)	Symbol	Test Conditions	Min	Typ	Max	Unit
V_{DD1} = 5V, V_{DD2} = 5V						
Power Frequency Magnetic Immunity	H_{PF}	50Hz/60Hz	-	3500	-	A/m
Pulse Magnetic Field Immunity	H_{PM}	t_P = 8µs	-	4500	-	A/m
Damped Oscillatory Magnetic Field	H_{OSC}	0.1Hz to 1MHz	-	4500	-	A/m
Cross-Axis Immunity Multiplier (Note 19)	K_X		-	2.5	-	A/m
V_{DD1} = 3.3V, V_{DD2} = 5V						
Power Frequency Magnetic Immunity	H_{PF}	50Hz/60Hz	-	1500	-	A/m
Pulse Magnetic Field Immunity	H_{PM}	t_P = 8µs	-	2000	-	A/m
Damped Oscillatory Magnetic Field	H_{OSC}	0.1Hz to1MHz	-	2000	-	A/m
Cross-Axis Immunity Multiplier (Note 19)	K_X		-	2.5	-	A/m

Notes:
18. The relevant test and measurement methods are given in the "Electromagnetic Compatibility" on page 10.
19. External magnetic field immunity is improved by this factor if the field direction is "end-to-end" rather than "pin-to-pin" see ("Electromagnetic Compatibility" on page 10).

3. Safety and Approvals

3.1 VDE V 0884-10

Basic Isolation; VDE File Number 5016933-4880-0001/229067

- Working voltage (V_{IORM}) $600V_{RMS}$ ($848V_{PK}$); Basic insulation, Pollution degree 2
- Transient overvoltage (V_{IOTM}) $4000V_{PK}$
- Each part tested at $1590V_{PK}$ for 1s, 5pC partial discharge limit
- Samples tested at $4000V_{PK}$ for 60s, then $1358V_{PK}$ for 10s with 5pC partial discharge limit

Symbol	Safety-limiting Values	Value	Unit
T_S	Safety Rating Ambient Temperature	180	°C
P_S	Safety Rating Power (+180°C)	270	mW
I_S	Supply Current Safety Rating (total of supplies)	54	mA

3.2 UL 1577

Component Recognition Program File Number: E483309

- Working voltage (V_{IORM}) $600V_{RMS}$ ($848V_{PK}$); basic insulation, pollution degree 2
- Transient overvoltage (V_{IOTM}) $4000V_{PK}$
- Each part tested at $3000V_{RMS}$ ($4243V_{PK}$) for 1s
- Each lot of samples tested at $2500V_{RMS}$ ($3536V_{PK}$) for 60s

4. Electromagnetic Compatibility

The ISL32740E is fully compliant with generic EMC standards EN50081, EN50082-1, and the umbrella line-voltage standard for Information Technology Equipment (ITE) EN61000. The isolator's Wheatstone bridge configuration and differential magnetic field signaling ensure excellent EMC performance against all relevant standards. Compliance tests have been conducted in the following categories:

Table 2. Compliance Test Categories

EN50081-1	EN50082-2	EN50204
Residential, Commercial, and Light Industrial: Methods EN55022, EN55014	Industrial Environment EN61000-4-2 (ESD) EN61000-4-3 (Electromagnetic Field Immunity) EN61000-4-4 (EFT) EN61000-4-6 (RFI Immunity) EN61000-4-8 (Power Frequency Magnetic Field immunity) EN61000-4-9 (Pulsed Magnetic Field) EN61000-4-10 (Damped Oscillatory Magnetic Field)	Radiated field from digital telephones
Immunity to external magnetic fields is even higher if the field direction is "end-to-end" rather than "pin-to-pin" as shown on the right.	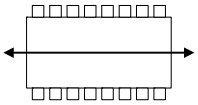	

5. Application Information

The ISL32740E is an isolated PROFIBUS transceiver specifically designed for PROFIBUS-DP applications.

5.1 PROFIBUS

This transceiver uses a differential input receiver for maximum noise immunity and common-mode rejection. PROFIBUS (Process Field Bus) is specified in IEC61158 as a standard for field bus communication in automation technology. Two versions of PROFIBUS exist: PROFIBUS - PA for Process Automation and PROFIBUS-DP for Decentralized Peripherals. The most commonly used version, PROFIBUS-DP, is a protocol for deterministic communication between PROFIBUS masters and their remote I/O slaves.

While the physical layer of PROFIBUS-DP is based on RS-485 with its differential signaling scheme, significant differences between the two physical layers exist with regard to cable type, bus termination, and minimum bus voltage, to name just a few parameters.

Table 3. Main Differences Between RS-485 and PROFIBUS-DP

Parameter	RS-485	PROFIBUS-DP
Cable Type	Unshielded twisted pair	Shielded twisted pair
Characteristic Impedance	120Ω	150Ω
Minimum Driver Output Voltage	1.5V	2.1V
Transceiver Input Capacitance	10 to 15pF	10pF
External Fail-safe Biasing	Customer configurable (none, at single or both cable ends)	Always at both cable ends
Resistor Values	Customer configurable	Fixed

5.2 Galvanic Isolation

To enable PROFIBUS transceivers operating over a wider common-mode voltage range than specified in RS-485 (7V to +12V), modern transceiver designs incorporate galvanic digital isolators with the transceiver circuitry. Here the ISL32740E uses a Giant Magnetoresistance (GMR) isolation. Figure 3 shows the principle operation of a single channel GMR isolator.

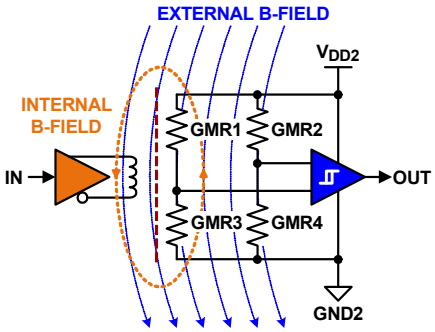

Figure 3. Single Channel GMR Isolator

The input signal is buffered and drives a primary coil, which creates a magnetic field that changes the resistance of the GMR resistors 1 to 4. GMR1 to GMR4 form a Wheatstone bridge in order to create a bridge output voltage that reacts only to magnetic field changes from the primary coil. Large external magnetic fields however, are treated as common-mode fields, and are therefore suppressed by the bridge configuration. The bridge output is fed into a comparator with an output signal identical in phase and shape to the input signal.

5.3 GMR Resistor in Detail

Figure 4 shows a GMR resistor consisting of ferromagnetic alloy layers B1 and B2 sandwiched around an ultra thin, nonmagnetic conducting middle layer A, typically copper. The GMR structure is designed so that in the absence of a magnetic field, the magnetic moments in B1 and B2 face opposite directions, thus causing heavy electron scattering across layer A, which drastically increases its resistance for current C. When a magnetic field D is applied, the magnetic moments in B1 and B2 are aligned and electron scattering is reduced. This lowers the resistance of layer A and current C increases.

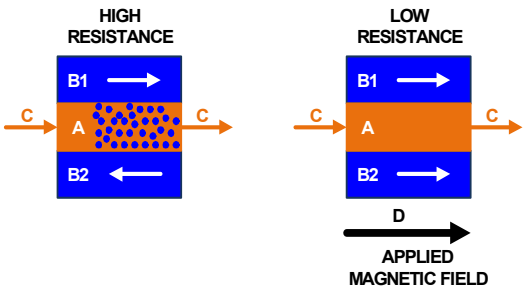

Figure 4. Multilayer GMR Resistor

5.4 Low Emissions

Because GMR isolators do not use complex encoding schemes, such as RF carriers or high-frequency clocks, and do not include power transfer coils or transformers, their radiated emission spectrum is practically undetectable.

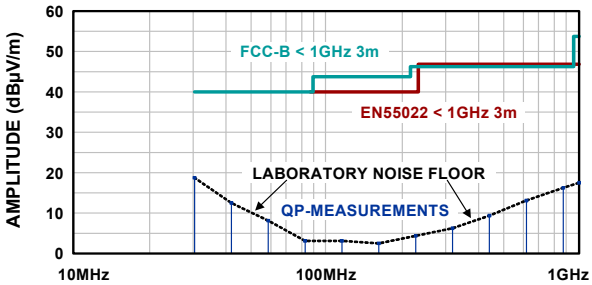

Figure 5. Undetectable Emissions of GMR Isolators

5.5 Low EMI Susceptibility

Because GMR isolators have no pulse trains or carriers to interfere with, they also have very low EMI susceptibility.

For the list of compliance tests conducted on GMR isolators refer to "Electromagnetic Compatibility" on page 10.

5.6 Receiver (Rx) Features

This transceiver uses a differential input receiver for maximum noise immunity and common-mode rejection. Input sensitivity is ±200mV, as required by the RS-422 and RS-485 specifications. Receiver inputs function with common-mode voltages as great as 7V outside the power supplies (for example, +12V and -7V), making them ideal for long networks, or industrial environments, where induced voltages are a realistic concern.

The receiver input resistance of 54kΩ surpasses the RS-422 specification of 4kΩ and is about five times the RS-485 "Unit Load" (UL) requirement of 12kΩ minimum. Thus, the ISL32740E is known as a "one-fifth UL" transceiver, and there can be up to 160 devices on the RS-485 bus while still complying with the RS-485 loading specification.

The receiver is a “full fail-safe” version that ensures a high-level receiver output if the receiver inputs are unconnected (floating), shorted together, or connected to a terminated bus with all the transmitters disabled (terminated/undriven).

Rx outputs deliver large low state currents (typically >30mA) at V_{OL} = 1V.

Receivers easily meet the 40Mbps data rate supported by the driver, and the receiver output is tri-statable using the active low $\overline{RE}$ input.

5.7 Driver (Tx) Features

The RS-485/RS-422 driver is a differential output device that delivers at least 2.1V across a 54Ω load (RS-485/PROFIBUS), and at least 2.6V across a 100Ω load (RS-422) even with V_{CC} = 4.5V. The drivers feature low propagation delay skew to maximize bit width and to minimize EMI.

Outputs of the drivers are not slew rate limited, so faster output transition times allow data rates of at least 40Mbps. Driver outputs are tri-statable through the active high DE input.

5.7.1 High V_{OD} Improves Noise Immunity and Flexibility

The ISL32740E driver design delivers larger differential output voltages (V_{OD}) than the RS-485 standard requires, or than most RS-485 transmitters can deliver. The minimum ±2.1V V_{OD} ensures at least ±600mV more noise immunity than networks built using standard 1.5V V_{OD} transmitters.

Another advantage of the large V_{OD} is the ability to drive more than two bus terminations, which allows for using the ISL32740E in “star” and other multi-terminated, “nonstandard” network topologies.

5.8 Built-In Driver Overload Protection

As stated previously, the RS-485 specification requires that drivers survive worst case bus contentions undamaged. These transmitters meet this requirement through driver output short-circuit current limits, and on-chip thermal shutdown circuitry.

The driver output stages incorporate short-circuit current limiting circuitry, which ensures that the output current never exceeds the RS-485 specification, even at the common-mode voltage range extremes. In the event of a major short-circuit condition, the device includes a thermal shutdown feature that disables the drivers whenever the die temperature becomes excessive. This eliminates the power dissipation, allowing the die to cool. The drivers automatically re-enable after the die temperature drops about 15°C. If the contention persists, the thermal shutdown/re-enable cycle repeats until the fault is cleared. Receivers stay operational during thermal shutdown.

5.9 Dynamic Power Consumption

The isolator within the ISL32740E achieves its low power consumption from the way it transmits data across the barrier. By detecting the edge transitions of the input logic signal and converting these to narrow current pulses, a magnetic field is created around the GMR Wheatstone bridge. Depending on the direction of the magnetic field, the bridge causes the output comparator to switch following the input signal. Because the current pulses are narrow, about 2.5ns, the power consumption is independent of the mark-to-space ratio and solely depends on frequency.

Table 4. Supply Current Increase with Data Rate

Data Rate (Mbps)	I_{DD1} (mA)	I_{DD2} (mA)
1	0.15	0.15
10	1.5	1.5
20	3	3
40	6	6

5.10 Power Supply Decoupling

Both supplies, V_{DD1} and V_{DD2}, must be bypassed with 100nF ceramic capacitors. The capacitors should be placed as close as possible to the supply pins for proper operation.

5.11 DC Correctness

The ISL32740E incorporates a patented refresh circuit to maintain the correct output state with respect to data input. At power-up, the bus outputs follow the truth tables on page 3. The DE input should be held low during power-up to prevent false drive data pulses on the bus.

5.12 Data Rate, Cables, and Terminations

Twisted pair is the cable of choice for RS-485, RS-422, and PROFIBUS networks. Twisted pair cables tend to pick up noise and other electromagnetically induced voltages as common-mode signals, which are effectively rejected by the differential receivers in these ICs.

According to guidelines in the RS-422 and PROFIBUS specifications, networks operating at data rates in excess of 3Mbps should be limited to cable lengths of 100m (328 ft) or less and the PROFIBUS specification recommends that the more expensive “Type A” (22AWG) cable be used. The ISL32740E’s large differential output swing, fast transition times, and high drive-current output stages allow operation even at 40Mbps over standard Cat 5 cables in excess of 100m (328 ft).

The ISL324740E can also be used at slower data rates over longer cables, but there are some limitations. The Rx is optimized for high-speed operation, so its output may glitch if the Rx input differential transition times are too slow. Keeping the transition times below 500ns, (which equates to the Tx driving a 1000ft (305m) Cat 5 cable) yields excellent performance across the full operating temperature range.

To minimize reflections, proper termination is imperative when using this high data rate transceiver. In point-to-point, or point-to-multipoint (single driver on bus) networks, the main cable should be terminated in its characteristic impedance (typically 100Ω for Cat 5, 120Ω for RS-485, and 150Ω for Type A) at the end farthest from the driver. In multireceiver applications, stubs connecting receivers to the main cable should be kept as short as possible. Multipoint (multidriver) systems require that the main cable be terminated in its characteristic impedance at both ends. Stubs connecting transceivers to the main cable should be kept as short as possible.

PROFIBUS specifies line termination with fail-safe biasing networks of fixed resistor values at both cable ends.

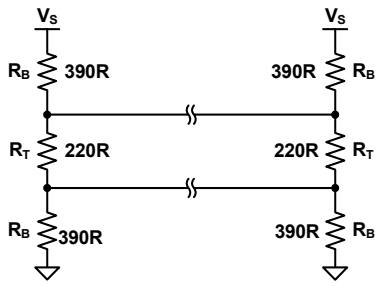

Figure 6. Line Termination for PROFIBUS-DP

For isolated data links meeting the requirements of EIA-485, the resistor values for the fail-safe biasing network can be calculated using (EQ. 1) through (EQ. 4).

For data links longer than 100m (330ft) apply fail-safe biasing at both cable ends to compensate for the attenuation of the bus fail-safe voltage caused by the voltage divider action of the cable’s DC resistance and the remote fail-safe biasing network. Use (EQ. 1) to calculate the bias resistors, R_B, and (EQ. 2) to determine the termination resistors, R_T.

(EQ. 1) $$R_B \geq \frac{V_S}{V_{AB}} \times \frac{Z_0}{2}$$

(EQ. 2) $$R_T = \frac{2R_B \times Z_0}{2R_B - Z_0}$$

where:

- R_B is the value of the biasing resistors
- R_T is the value of the termination resistors
- V_S is the minimum transceiver supply voltage
- V_{AB} is the minimum bus voltage during bus idling
- Z_0 is the characteristic cable impedance of 120Ω

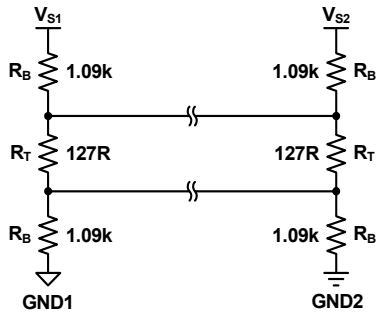

Figure 7. Dual Fail-Safe Biasing for Long Data Links

For data links shorter than 100m, use a single fail-safe biasing network. Match the termination resistor value at the cable end without fail-safe biasing with the characteristic cable impedance: $R_{T1} = Z_0$. Then calculate R_B using (EQ. 3) and R_{T2} using (EQ. 4).

(EQ. 3) $$R_B \geq \frac{V_S}{V_{AB}} \times \frac{Z_0}{4}$$

(EQ. 4) $$R_{T2} = \frac{2R_B \times Z_0}{2R_B - Z_0}$$

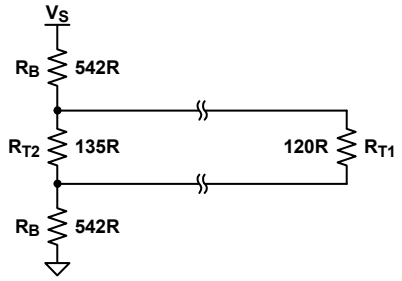

Figure 8. Single Fail-Safe Biasing for Short Data Links

Note that the resistor values in Figures 7 and 8 have been calculated for V_S = 4.5V, V_{AB} = 0.25V, and Z_0 = 120Ω.

5.13 Transient Protection

Protecting the ISL32740E against transients exceeding the device's transient immunity requires the addition of an external TVS. For this purpose, Semtech's RClamp0512TQ was chosen due to its high transient protection levels, low junction capacitance, and small form factor.

Table 5. RCLAMP0512 TVS Features

Parameter		Symbol	Value	Unit
ESD (IEC61000-4-2)	Air	V_{ESD}	±30	kV
	Contact	V_{ESD}	±30	kV
EFT (IEC61000-4-4)		V_{EFT}	±4	kV
Surge (IEC61000-4-5)		V_{SURGE}	±1.3	kV
Junction Capacitance		C_J	3	pF
Form Factor		-	1 x 0.6	mm

The TVS is implemented between the bus lines and isolated ground (GND2).

Because transient voltages on the bus lines are referenced to Earth potential, also known as Protective Earth (PE), a high-voltage capacitor (C_{HV}) is inserted between GND2 and PE, providing a low-impedance path for high-frequency transients.

Note that the connection from the PE point on the isolated side to the PE point on the non-isolated side (Earth) is usually made using the metal chassis of the equipment, or through a short, thick wire of low-inductance.

A high-voltage resistor (R_{HV}) is added in parallel to C_{HV} to prevent the build-up of static charges on floating grounds (GND2) and cable shields (typically used in PROFIBUS). The bill of materials for the circuit in Figure 9 is listed in Table 6 on page 16.

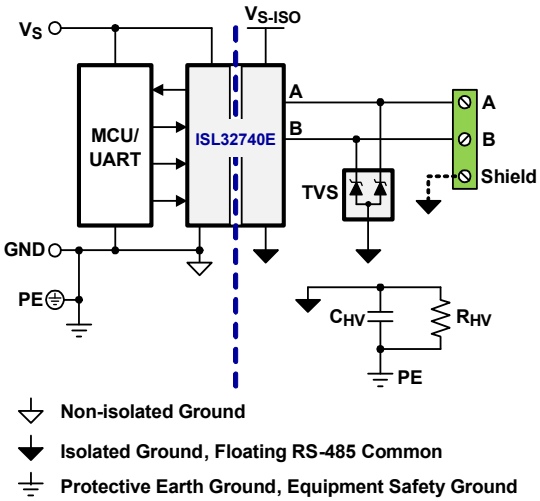

Figure 9. Transient Protection for ISL32740E

Table 6. BOM for Circuit in Figure 9

Name	Function	Order No.	Vendor
TVS	170W (8, 20µs) 2-LINE PROTECTOR	RCLAMP0512TQ	SEMTECH
C_{HV}	4.7nF, 2kV, 10% CAPACITOR	1812B472K202NT	NOVACAP
R_{HV}	1MΩ, 2kV, 5% RESISTOR	HVC12061M0JT3	TT-ELECTRONICS

6. Revision History

Rev.	Date	Description
4.00	Nov 30, 2017	Updated certification file number for VDE.
3.00	Oct 2, 2017	Updated thermal resistance values for the QSOP package. Changed θ_{JA} from “92” to “77” and θ_{JC} from “37” to “41”.
2.00	Aug 24, 2017	Updated Table 1 on page 2. Updated receiving truth table.
1.00	Jul 6, 2017	Applied new formatting standards. Updated Title. Added ISL32740EIAZ and ISL32740EFBZ information throughout document. Updated Note 1. Updated Pin descriptions for Pins A, B, GND2, ISODE, and VDD2. Updated thermal resistance for the SOICW package. Changed θ_{JA} from “60” to “43” and θ_{JC} from “12” to “20”. Updated Total Barrier Thickness (internal) spec removed minimum and changed typical from “16” to “13”. Updated “Magnetic Field Immunity” on page 8, removed all MIN values. Updated POD M16.3A to the latest revision. Changes are as follows: -Revised the land pattern.
0.00	Feb 28, 2017	Initial release

For the most recent package outline drawing, see M16.3A.

7. Package Outline Drawings

M16.3A
16 LEAD WIDE BODY SMALL OUTLINE PLASTIC PACKAGE (SOICW)
Rev 1, 6/17

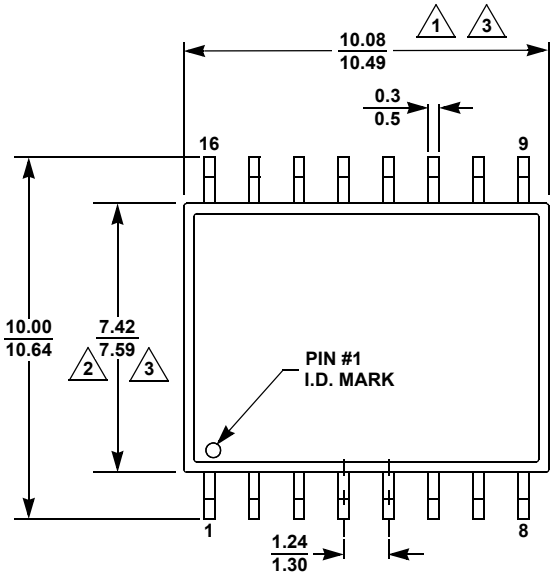

TOP VIEW

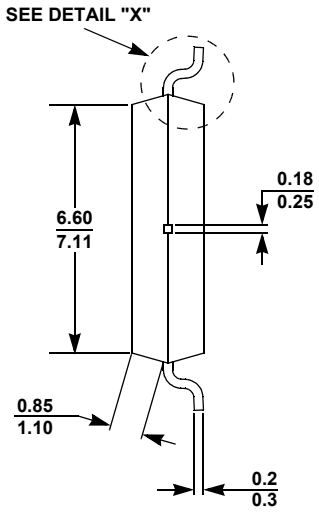

END VIEW

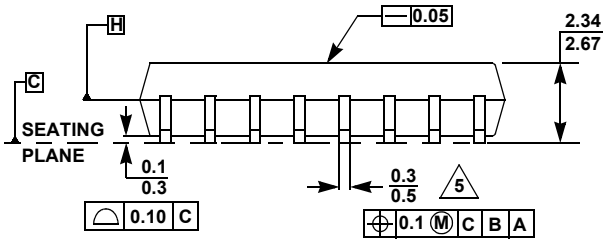

SIDE VIEW

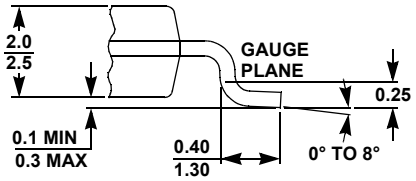

DETAIL X

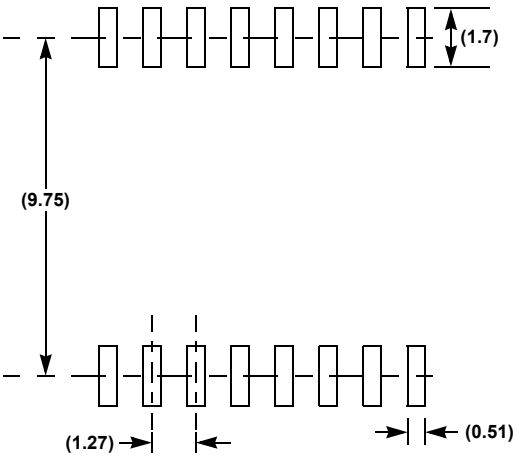

TYPICAL RECOMMENDED LAND PATTERN

NOTES:

20. Dimension does not include mold flash, protrusions, or gate burrs. Mold flash, protrusions, or gate burrs shall not exceed 0.15 per side.
21. Dimension does not include interlead flash or protrusion. Interlead flash or protrusion shall not exceed 0.25 per side.
22. Dimensions are measured at datum plane H.
23. Dimensioning and tolerancing per ASME Y14.5M-1994.
24. Dimension does not include dambar protrusion.
25. Dimension in ( ) are for reference only.
26. Pin spacing is a BASIC dimension; tolerances do not accumulate.
27. Dimensions are in mm.

For the most recent package outline drawing, see M16.15B.

M16.15B
16 LEAD QUARTER-SIZE SMALL OUTLINE PLASTIC PACKAGE (QSOP)
Rev 0, 9/16

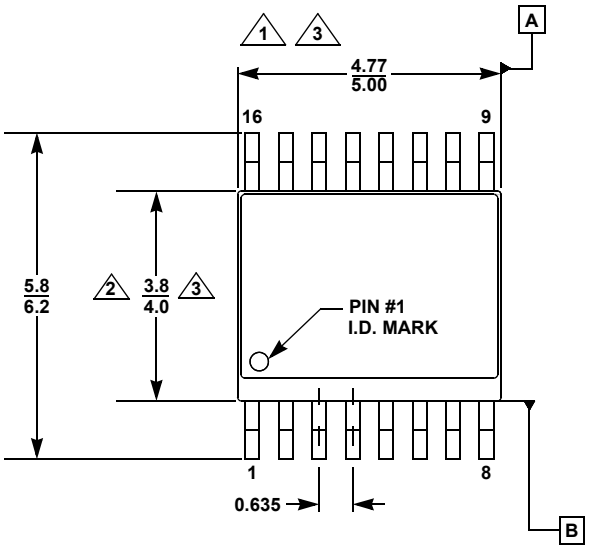

TOP VIEW

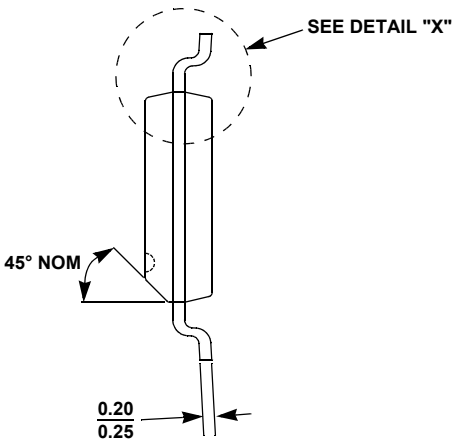

END VIEW

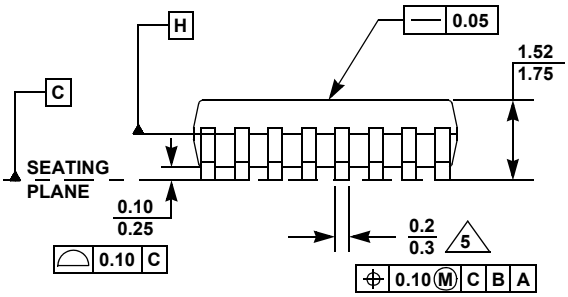

SIDE VIEW

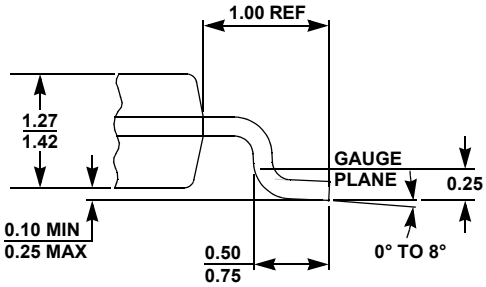

DETAIL X

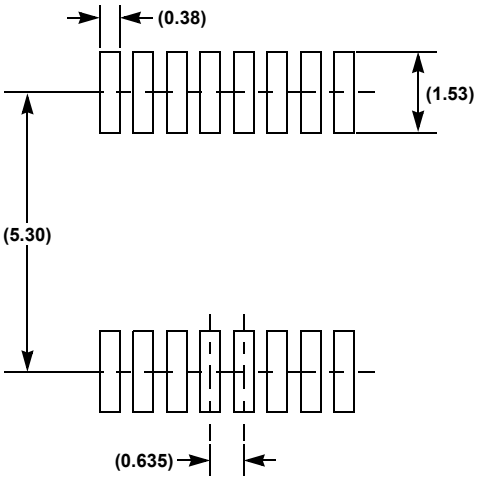

TYPICAL RECOMMENDED LAND PATTERN

NOTES:

1. Dimension does not include mold flash, protrusions, or gate burrs. Mold flash, protrusions, or gate burrs shall not exceed 0.15 per side.
2. Dimension does not include interlead flash or protrusion. Interlead flash or protrusion shall not exceed 0.25 per side.
3. Dimensions are measured at datum plane H.
4. Dimensioning and tolerancing per ASME Y14.5M-1994.
5. Dimension does not include dambar protrusion.
6. Dimension in ( ) are for reference only.
7. Pin spacing is a BASIC dimension; tolerances do not accumulate.
8. Dimensions are in mm.

8. About Intersil

Intersil Corporation is a leading provider of innovative power management and precision analog solutions. The company's products address some of the largest markets within the industrial and infrastructure, mobile computing and high-end consumer markets.

For the most updated datasheet, application notes, related documentation and related parts, please see the respective product information page found at www.intersil.com.

For a listing of definitions and abbreviations of common terms used in our documents, visit: www.intersil.com/glossary.

You can report errors or suggestions for improving this datasheet by visiting www.intersil.com/ask.

Reliability reports are also available from our website at www.intersil.com/support.

© Copyright Intersil Americas LLC 2017. All Rights Reserved.
All trademarks and registered trademarks are the property of their respective owners.

For additional products, see www.intersil.com/en/products.html

Intersil products are manufactured, assembled and tested utilizing ISO9001 quality systems as noted in the quality certifications found at www.intersil.com/en/support/qualandreliability.html

Intersil products are sold by description only. Intersil may modify the circuit design and/or specifications of products at any time without notice, provided that such modification does not, in Intersil's sole judgment, affect the form, fit or function of the product. Accordingly, the reader is cautioned to verify that datasheets are current before placing orders. Information furnished by Intersil is believed to be accurate and reliable. However, no responsibility is assumed by Intersil or its subsidiaries for its use; nor for any infringements of patents or other rights of third parties which may result from its use. No license is granted by implication or otherwise under any patent or patent rights of Intersil or its subsidiaries.

For information regarding Intersil Corporation and its products, see www.intersil.com

Компания «ЭлектроПласт» предлагает заключение долгосрочных отношений при поставках импортных электронных компонентов на взаимовыгодных условиях!

Наши преимущества:

- Оперативные поставки широкого спектра электронных компонентов отечественного и импортного производства напрямую от производителей и с крупнейших мировых складов;
- Поставка более 17-ти миллионов наименований электронных компонентов;
- Поставка сложных, дефицитных, либо снятых с производства позиций;
- Оперативные сроки поставки под заказ (от 5 рабочих дней);
- Экспресс доставка в любую точку России;
- Техническая поддержка проекта, помощь в подборе аналогов, поставка прототипов;
- Система менеджмента качества сертифицирована по Международному стандарту ISO 9001;
- Лицензия ФСБ на осуществление работ с использованием сведений, составляющих государственную тайну;
- Поставка специализированных компонентов (Xilinx, Altera, Analog Devices, Intersil, Interpoint, Microsemi, Aeroflex, Peregrine, Syfer, Eurofarad, Texas Instrument, Miteq, Cobham, E2V, MA-COM, Hittite, Mini-Circuits,General Dynamics и др.);

Помимо этого, одним из направлений компании «ЭлектроПласт» является направление «Источники питания». Мы предлагаем Вам помощь Конструкторского отдела:

- Подбор оптимального решения, техническое обоснование при выборе компонента;
- Подбор аналогов;
- Консультации по применению компонента;
- Поставка образцов и прототипов;
- Техническая поддержка проекта;
- Защита от снятия компонента с производства.

Как с нами связаться

Телефон: 8 (812) 309 58 32 (многоканальный)
Факс: 8 (812) 320-02-42
Электронная почта: org@eplast1.ru
Адрес: 198099, г. Санкт-Петербург, ул. Калинина, дом 2, корпус 4, литера А.