3-teminal Filters

For signal line

ACF series

Type:	**ACF3225**	**[1210 inch]***
	ACF4532	**[1812 inch]**

*** Dimensions Code [EIA]**

Issue date: September 2011

- All specifications are subject to change without notice.
- Conformity to RoHS Directive: This means that, in conformity with EU Directive 2002/95/EC, lead, cadmium, mercury, hexavalent chromium, and specific bromine-based flame retardants, PBB and PBDE, have not been used, except for exempted applications.

TDK

3-terminal Filters For Signal Line

Conformity to RoHS Directive

ACF Series ACF321825, ACF451832

FEATURES

- The ACF series consists of products with superior attenuation characteristics, in which the T-type filter circuit is magnetically shielded with ferrite.
- The series offers even greater attenuation characteristics when used in a stable circuit on the ground.
- The ACF series is ideal for high-density circuit design, since the series is vertically mounted and does not require much mounting space.
- Available for reflow soldering.
- It is a product conforming to RoHS directive.

PRODUCT IDENTIFICATION

ACF	321825	-	223	-	T	D□□
(1)	(2)		(3)		(4)	(5)

(1) Series name
(2) Dimensions
(3) Type
(4) Packaging style
(5) TDK internal code

TEMPERATURE RANGES

Operating/Storage	–25 to +85°C

PACKAGING STYLE AND QUANTITIES

Packaging style	Quantity
Taping	1000 pieces/reel

HANDLING AND PRECAUTIONS

- Before soldering, be sure to preheat components. The preheating temperature should be set so that the temperature difference between the solder temperature and product temperature does not exceed 150°C.
- After mounting components onto the printed circuit board, do not apply stress through board bending or mishandling.
- The inductance value may change due to magnetic saturation if the current exceeds the rated maximum.
- Do not expose the inductors to stray magnetic fields.
- Avoid static electricity discharge during handling.
- When hand soldering, apply the soldering iron to the printed circuit board only. Temperature of the iron tip should not exceed 350°C. Soldering time should not exceed 3 seconds.

- Conformity to RoHS Directive: This means that, in conformity with EU Directive 2002/95/EC, lead, cadmium, mercury, hexavalent chromium, and specific bromine-based flame retardants, PBB and PBDE, have not been used, except for exempted applications.
- Please contact our Sales office when your application is considered the following:
  The device's failure or malfunction may directly endanger human life (e.g. application for automobile/aircraft/medical/nuclear power devices, etc.)

• All specifications are subject to change without notice.

ACF321825 TYPE

SHAPES AND DIMENSIONS/CIRCUIT DIAGRAM

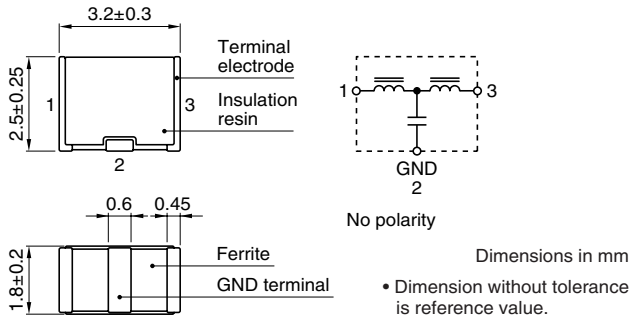

RECOMMENDED PC BOARD PATTERN REFLOW SOLDERING

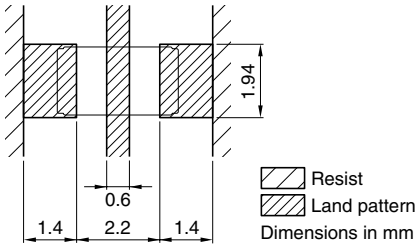

ELECTRICAL CHARACTERISTICS

Part No.	25dB attenuation frequency range (MHz)	Rated voltage Edc (V)max.	Rated current (mA)max.	DC resistance (Ω)max. [Terminal No.1 to 3]	Insulation resistance (MΩ)min. [Terminal No.1 to 2/No.2 to 3]
ACF321825-223	11 to 55	20	300	0.15	1000
ACF321825-103	17 to 60	20	300	0.15	1000
ACF321825-682	22 to 75	20	300	0.15	1000
ACF321825-472	30 to 85	20	300	0.15	1000
ACF321825-332	37 to 90	20	300	0.15	1000
ACF321825-222	45 to 105	20	300	0.15	1000
ACF321825-152	60 to 115	20	300	0.15	1000
ACF321825-102	80 to 140	20	300	0.15	1000
ACF321825-681	95 to 150	20	300	0.15	1000
ACF321825-471	120 to 180	20	300	0.15	1000
ACF321825-331	130 to 210	20	300	0.15	1000
ACF321825-221	170 to 250	20	300	0.15	1000
ACF321825-151	205 to 280	20	300	0.15	1000
ACF321825-101	265 to 340	20	300	0.15	1000
ACF321825-680	340 to 420	20	300	0.15	1000
ACF321825-470	420 to 500	20	300	0.15	1000
ACF321825-330	500 to 600	20	300	0.15	1000
ACF321825-220	600 to 700	20	300	0.15	1000

TYPICAL ELECTRICAL CHARACTERISTICS

ATTENUATION vs. FREQUENCY CHARACTERISTICS

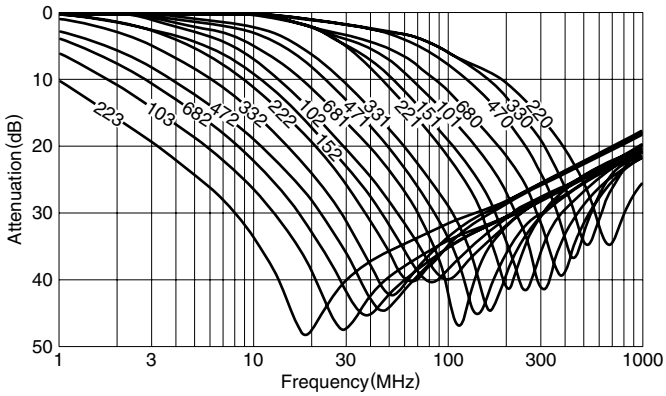

MEASURING CIRCUIT

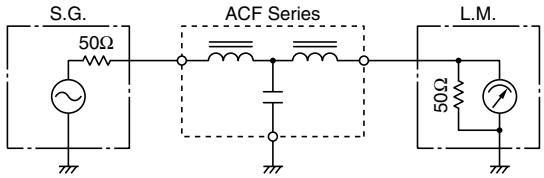

• All specifications are subject to change without notice.

ACF451832 TYPE

SHAPES AND DIMENSIONS/CIRCUIT DIAGRAM

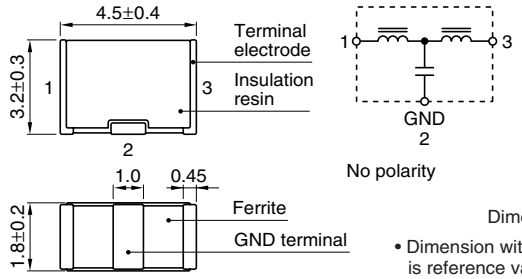

RECOMMENDED PC BOARD PATTERN REFLOW SOLDERING

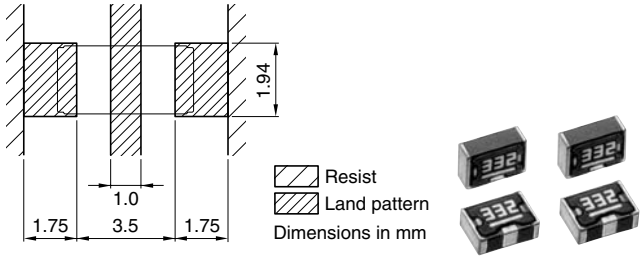

ELECTRICAL CHARACTERISTICS

Part No.	25dB attenuation frequency range (MHz)	Rated voltage Edc (V)max.	Rated current (mA)max.	DC resistance (Ω)max. [Terminal No.1 to 3]	Insulation resistance (MΩ)min. [Terminal No.1 to 2/No.2 to 3]
ACF451832-333	7 to 60	50	300	0.15	1000
ACF451832-223	9 to 65	50	300	0.15	1000
ACF451832-153	11 to 70	50	300	0.15	1000
ACF451832-103	15 to 75	50	300	0.15	1000
ACF451832-682	20 to 85	50	300	0.15	1000
ACF451832-472	25 to 90	50	300	0.15	1000
ACF451832-332	35 to 100	50	300	0.15	1000
ACF451832-222	40 to 110	50	300	0.15	1000
ACF451832-152	50 to 130	50	300	0.15	1000
ACF451832-102	65 to 150	50	300	0.15	1000
ACF451832-681	75 to 160	50	300	0.15	1000
ACF451832-471	95 to 180	50	300	0.15	1000
ACF451832-331	115 to 205	50	300	0.15	1000
ACF451832-221	150 to 250	50	300	0.15	1000
ACF451832-151	190 to 290	50	300	0.15	1000
ACF451832-101	235 to 335	50	300	0.15	1000
ACF451832-680	295 to 395	50	300	0.15	1000
ACF451832-470	360 to 460	50	300	0.15	1000
ACF451832-330	450 to 550	50	300	0.15	1000
ACF451832-220	550 to 650	50	300	0.15	1000

TYPICAL ELECTRICAL CHARACTERISTICS

ATTENUATION vs. FREQUENCY CHARACTERISTICS

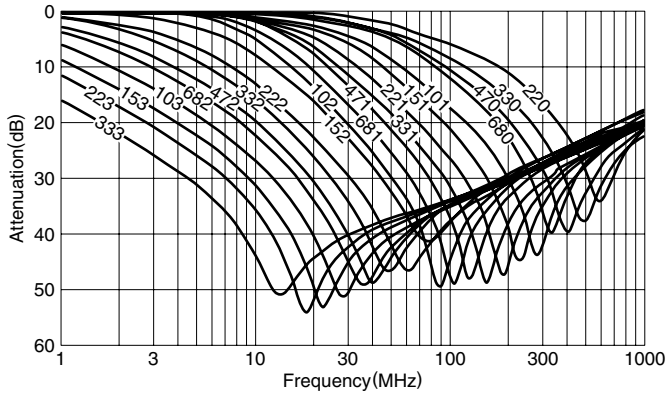

MEASURING CIRCUIT

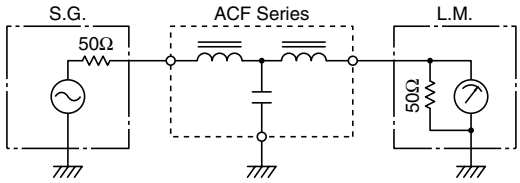

• All specifications are subject to change without notice.

PACKAGING STYLES

REEL DIMENSIONS

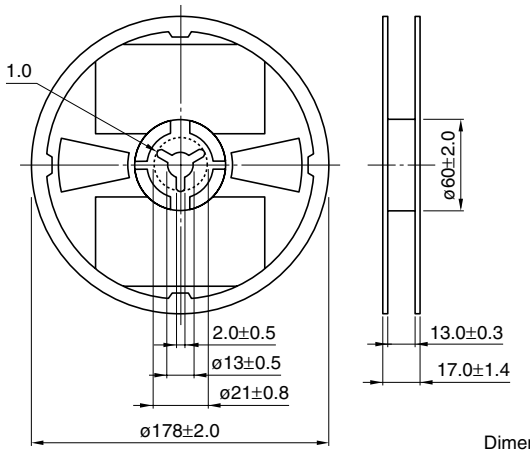

Dimensions in mm

TAPE DIMENSIONS

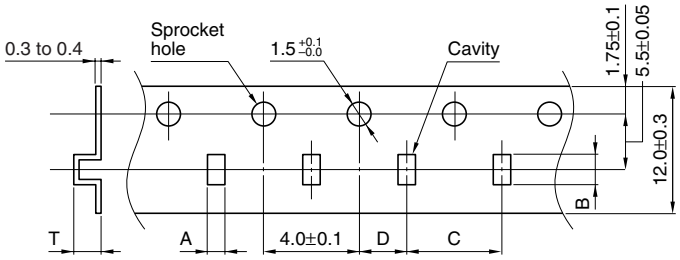

Dimensions in mm

Type	A	B	C	D	T
321825	2.2±0.2	3.7±0.2	4.0±0.1	2.0±0.05	3.3max.
451832	2.2±0.2	5.2±0.2	4.0±0.1	2.0±0.05	3.8max.

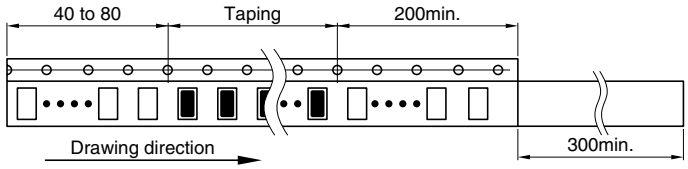

Dimensions in mm

Компания «ЭлектроПласт» предлагает заключение долгосрочных отношений при поставках импортных электронных компонентов на взаимовыгодных условиях!

Наши преимущества:

- Оперативные поставки широкого спектра электронных компонентов отечественного и импортного производства напрямую от производителей и с крупнейших мировых складов;
- Поставка более 17-ти миллионов наименований электронных компонентов;
- Поставка сложных, дефицитных, либо снятых с производства позиций;
- Оперативные сроки поставки под заказ (от 5 рабочих дней);
- Экспресс доставка в любую точку России;
- Техническая поддержка проекта, помощь в подборе аналогов, поставка прототипов;
- Система менеджмента качества сертифицирована по Международному стандарту ISO 9001;
- Лицензия ФСБ на осуществление работ с использованием сведений, составляющих государственную тайну;
- Поставка специализированных компонентов (Xilinx, Altera, Analog Devices, Intersil, Interpoint, Microsemi, Aeroflex, Peregrine, Syfer, Eurofarad, Texas Instrument, Miteq, Cobham, E2V, MA-COM, Hittite, Mini-Circuits,General Dynamics и др.);

Помимо этого, одним из направлений компании «ЭлектроПласт» является направление «Источники питания». Мы предлагаем Вам помощь Конструкторского отдела:

- Подбор оптимального решения, техническое обоснование при выборе компонента;
- Подбор аналогов;
- Консультации по применению компонента;
- Поставка образцов и прототипов;
- Техническая поддержка проекта;
- Защита от снятия компонента с производства.

Как с нами связаться

Телефон: 8 (812) 309 58 32 (многоканальный)
Факс: 8 (812) 320-02-42
Электронная почта: org@eplast1.ru
Адрес: 198099, г. Санкт-Петербург, ул. Калинина, дом 2, корпус 4, литера А.