THIS DRAWING IS UNPUBLISHED. RELEASED FOR PUBLICATION -
© COPYRIGHT copyright.dgte- ALL RIGHTS RESERVED.

REVISIONS

P	LTR	DESCRIPTION	DATE	DWN	APVD
	A	PROMOTE TO PRODUCTION	04NOV2016	TX	SH

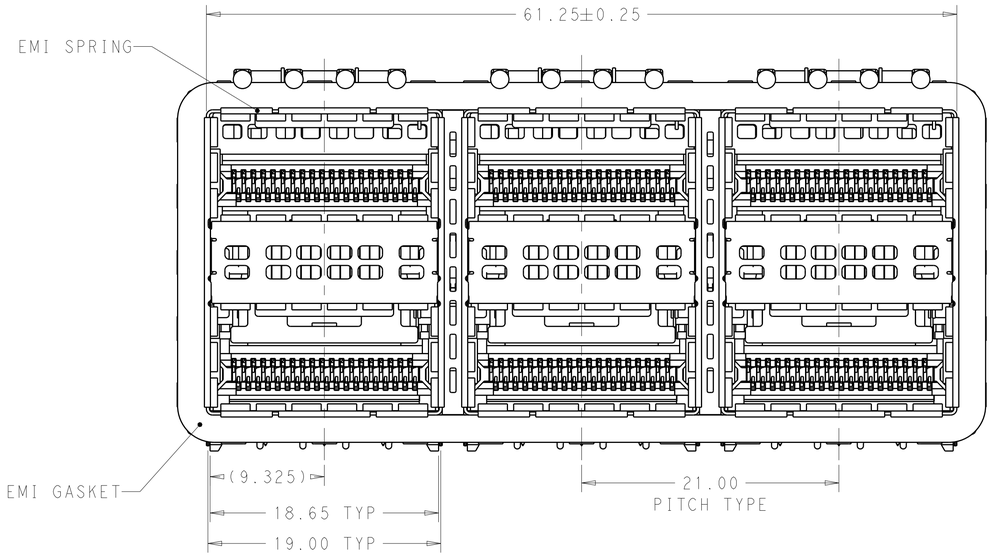

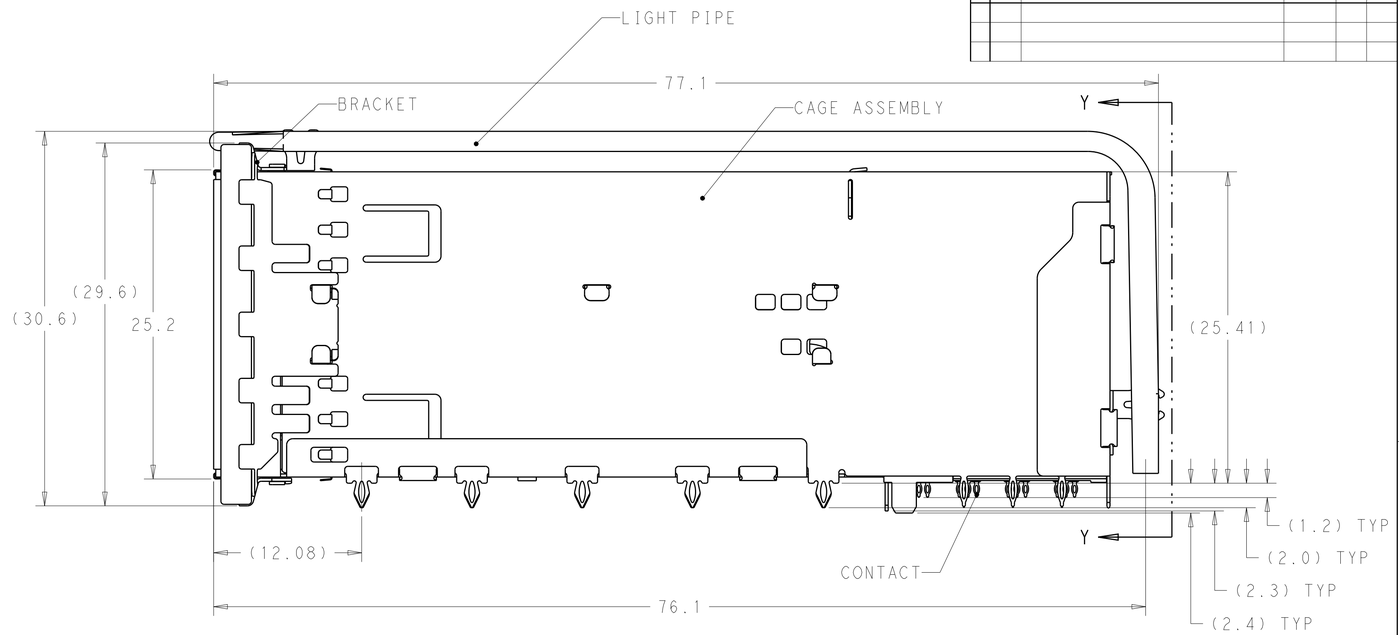

2170610-1 AS SHOWN

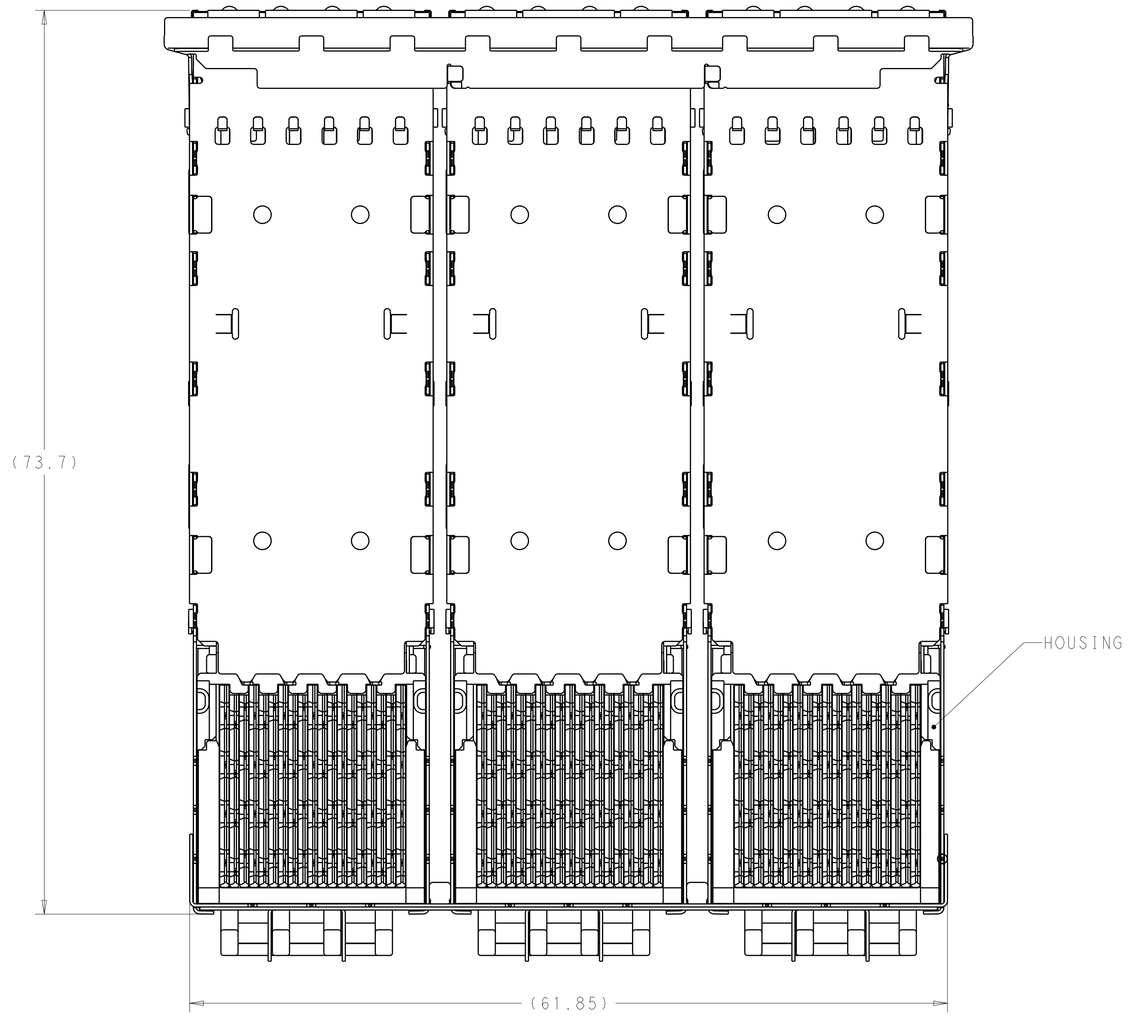

1. MATERIALS:
   CAGE ASSEMBLY- NICKEL SILVER ALLOY PER ASTM B 122.
   BRACKET- STAINLESS STEEL.
   EMI SPRING- COPPER ALLOY, NICKEL PLATED.
   EMI GASKET- PLATED FILLED SILICONE WITH 94V-0.
   HOUSING- POLYESTER LCP WITH 94V-0.
   CHICKLET- POLYESTER LCP WITH 94V-0.
   CONTACT- COPPER ALLOY.
   LIGHTPIPE- POLYCARBONATE WITH 94V-0.

2. CONTACT FINISH: 0.76µm GOLD ON MATING END, 1.25µm MATT TIN ON SOLDER TAIL, ALL OVER 1.27µm NICKEL.

3. DATUM AND BASIC DIMENSION ESTABLISHED BY CUSTOMER.

4. MINIMUM PCB THICKNESS: 1.57mm.

5. THE ENTIRE AREA OF THE CONNECTOR FOOTPRINT, INDICATED BY THE DASHED LINE, TO BE CONSIDERED THE KEEPOUT AREA FOR COMPONENTS.

6. CROSS-HATCHED AREAS REPRESENT ZONES ON THE PCB THAT COME IN CONTACT WITH OR BE IN CLOSE PROXIMITY TO THE PLASTIC HOUSING OR THE CONNECTOR CAGE. INDICATED AREAS TO BE CONSIDERED TRACE FREE.

7. PART NUMBER AND DATE CODE MARKED IN APPROXIMATE AREA SHOWN.

8. HATCHED AREA IS PLACEMENT ZONE FOR LED. LED SHOULD BE CENTERED WITHIN ZONE. RECOMMEND 0805 PACKAGE.

9. CONTACT FINISH: 0.08µm MINIMUM GOLD OVER 0.68µm PALLADIUM-NICKEL ON MATING END, 1.25µm MATT TIN ON SOLDER TAIL, ALL OVER 1.27µm NICKEL.

CONTACT FINISHED	DESCRIPTION	PART NUMBER
2	Au PLATING	2170610-3
9	Pd-Ni PLATING	2170610-2
2	Au PLATING	2170610-1

THIS DRAWING IS A CONTROLLED DOCUMENT.

DIMENSIONS: mm

TOLERANCES UNLESS OTHERWISE SPECIFIED:
0 PLC ±-
1 PLC ±0.25
2 PLC ±0.15
3 PLC ±
4 PLC ±
ANGLES ±2°

MATERIAL: SEE NOTE 1 -
FINISH: SEE NOTE 2 -

DWN KEVIN DING 21OCT13
CHK JASON YANG 21OCT13
APVD JASON YANG 21OCT13
PRODUCT SPEC 108-60102
APPLICATION SPEC 114-60015
WEIGHT -

TE Connectivity

NAME: CAGE AND CONNECTOR ASSEMBLY, WITH EMI GASKET, 2X3, THERMAL FOOTPRINT, ZQSFP+STACKED

SIZE	CAGE CODE	DRAWING NO	RESTRICTED TO
A1	00779	C-2170610	-

CUSTOMER DRAWING | SCALE 4:1 | SHEET 1 OF 4 | REV A

THIS DRAWING IS UNPUBLISHED. RELEASED FOR PUBLICATION -
© COPYRIGHT copyright.dgkc- ALL RIGHTS RESERVED.

REVISIONS

P	LTR	DESCRIPTION	DATE	DWN	APVD
	-	SEE SHEET 1	-	-	-

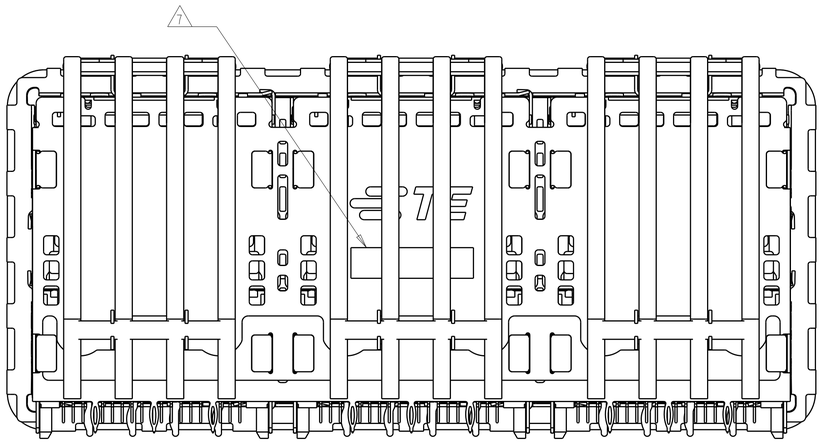

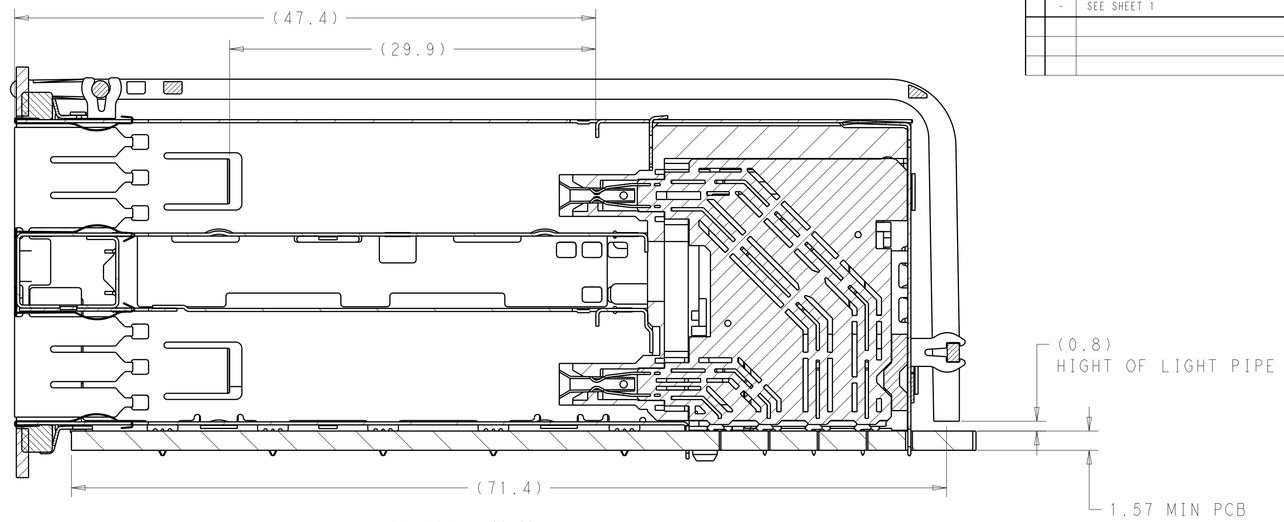

SECTION V-V
SCALE 4:1

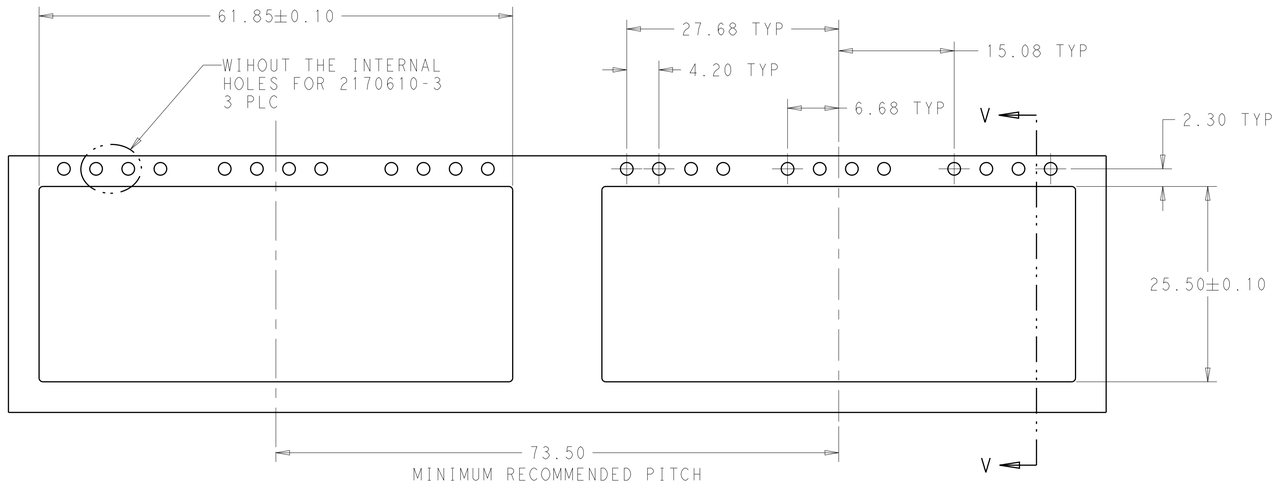

RECOMMEND ED PANEL CUTOUT
AND PC BOARD, PANEL POSITION

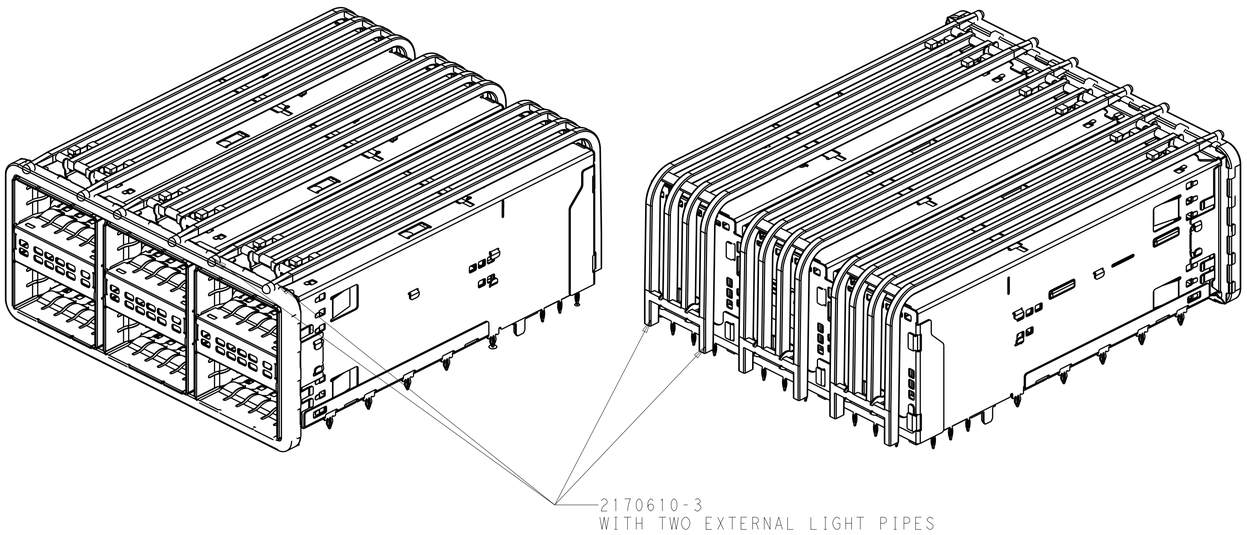

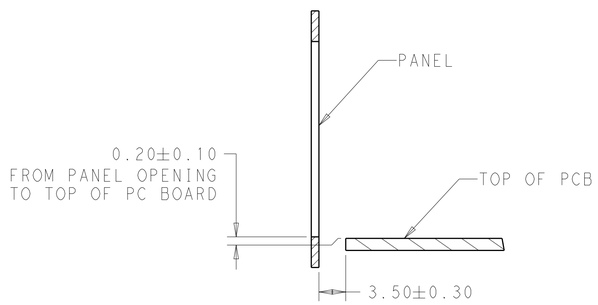

SECTION V-V

THIS DRAWING IS A CONTROLLED DOCUMENT.

DIMENSIONS: mm

TOLERANCES UNLESS OTHERWISE SPECIFIED:
0 PLC ±-
1 PLC ±0.25
2 PLC ±0.15
3 PLC ±
4 PLC ±
ANGLES ±2°

MATERIAL: SEE NOTE 1 -

FINISH: SEE NOTE 2 -

DWN: KEVIN DING 21OCT13
CHK: JASON YANG 21OCT13
APVD: JASON YANG 21OCT13

PRODUCT SPEC: 108-60102
APPLICATION SPEC: 114-60015
WEIGHT: -

TE Connectivity

NAME: CAGE AND CONNECTOR ASSEMBLY, WITH EMI GASKET, 2X3, THERMAL FOOTPRINT, ZQSFP+STACKED

SIZE: A1 | CAGE CODE: 00779 | DRAWING NO: C-2170610 | RESTRICTED TO: -

CUSTOMER DRAWING | SCALE 4:1 | SHEET 2 OF 4 | REV A

4805 (3/13)

THIS DRAWING IS UNPUBLISHED. RELEASED FOR PUBLICATION -
© COPYRIGHT copyright.dgkc- ALL RIGHTS RESERVED.

REVISIONS

P	LTR	DESCRIPTION	DATE	DWN	APVD
	-	SEE SHEET 1	-	-	-

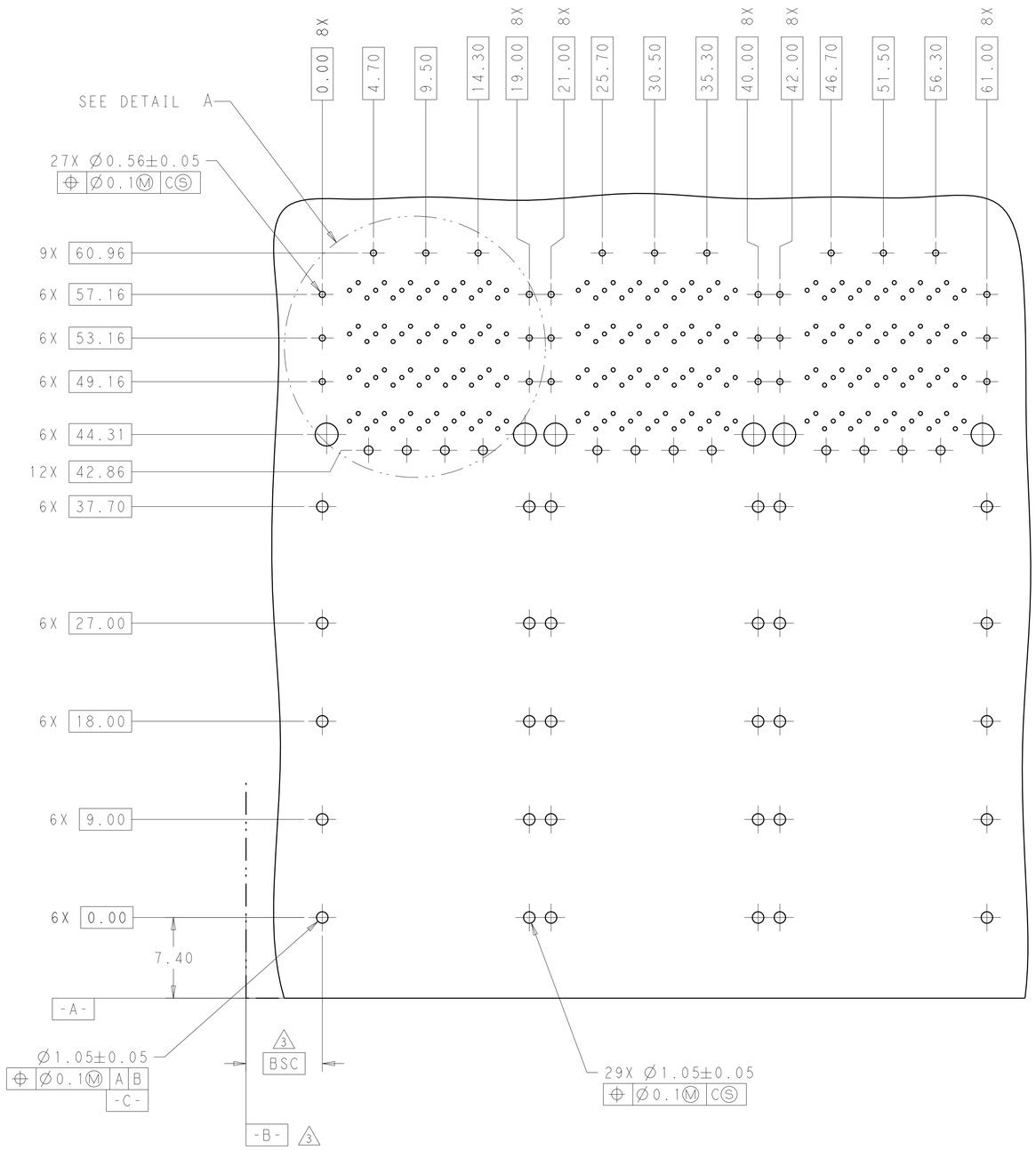

RECOMMENDED PC BOARD LAYOUT
COMPONENT SIDE OF BOARD
PCB TOLERANCE:±0.05

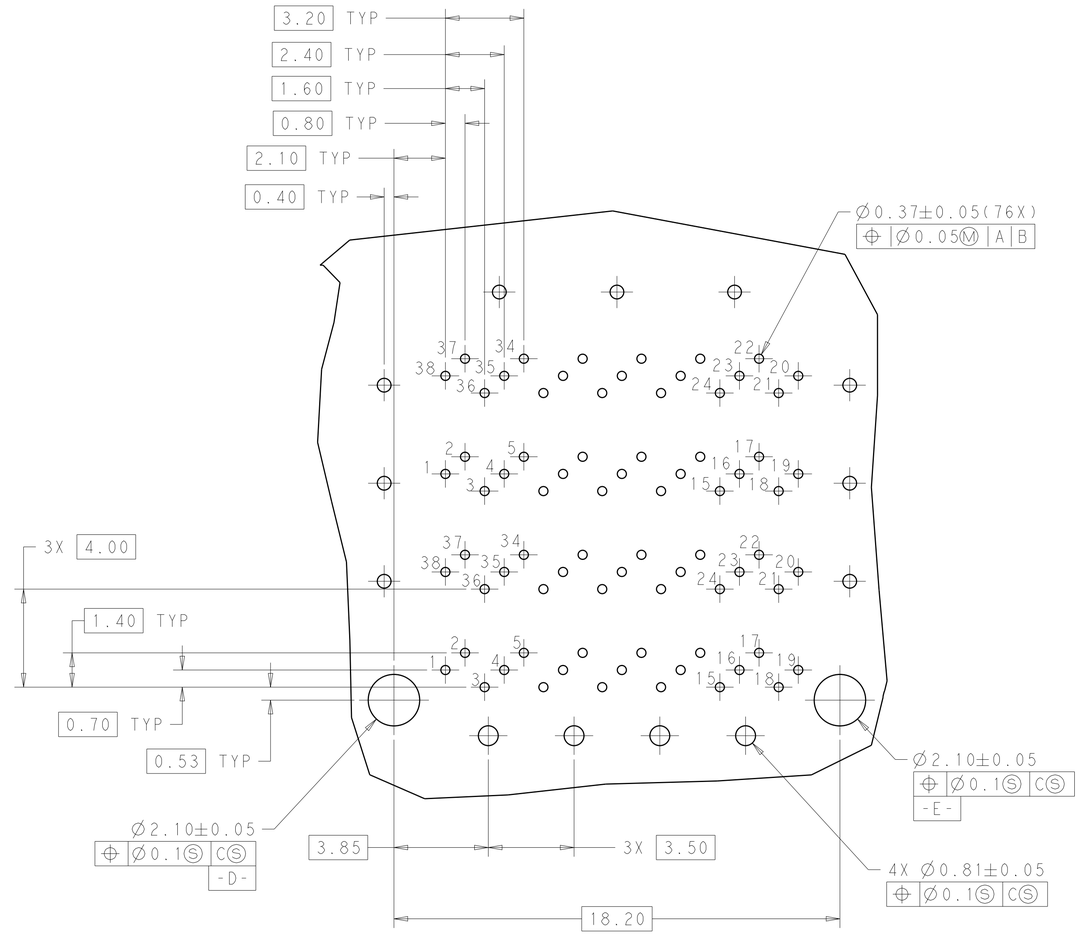

DETAIL A
3X INDIVIDUALLY
SCALE 8:1

THIS DRAWING IS A CONTROLLED DOCUMENT.

DIMENSIONS: mm

TOLERANCES UNLESS OTHERWISE SPECIFIED:
0 PLC ±
1 PLC ±0.25
2 PLC ±0.15
3 PLC ±
4 PLC ±
ANGLES ±2°

MATERIAL: SEE NOTE 1 -
FINISH: SEE NOTE 2 -

DWN KEVIN DING 21OCT13
CHK JASON YANG 21OCT13
APVD JASON YANG 21OCT13
PRODUCT SPEC 108-60102
APPLICATION SPEC 114-60015
WEIGHT -

TE Connectivity

NAME: CAGE AND CONNECTOR ASSEMBLY, WITH EMI GASKET, 2X3, THERMAL FOOTPRINT, ZQSFP+STACKED

SIZE A1 | CAGE CODE 00779 | DRAWING NO C-2170610 | RESTRICTED TO -

CUSTOMER DRAWING | SCALE 4:1 | SHEET 3 OF 4 | REV A

4805 (3/13)

THIS DRAWING IS UNPUBLISHED. RELEASED FOR PUBLICATION -
© COPYRIGHT copyright.dgkc- ALL RIGHTS RESERVED.

REVISIONS

P	LTR	DESCRIPTION	DATE	DWN	APVD
	-	SEE SHEET 1	-	-	-

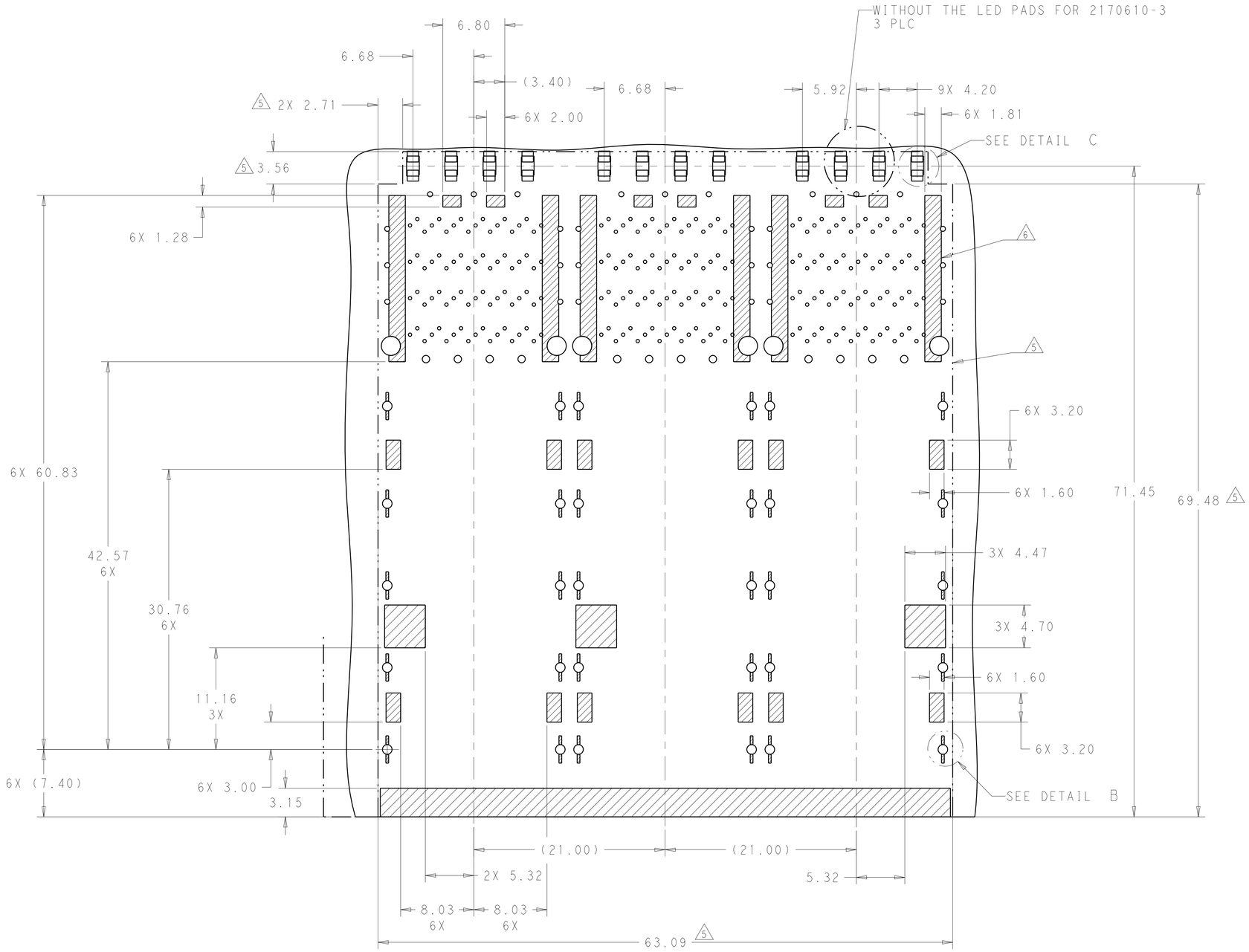

KEEPOUT AREAS
COMPONENT SIDE OF BOARD

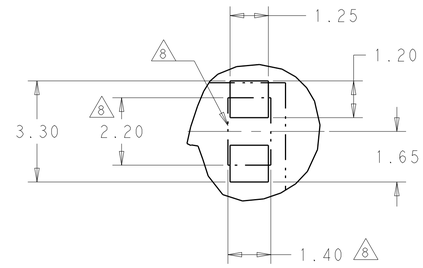

DETAIL C
SCALE 10:1

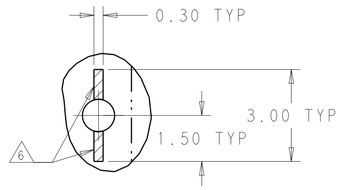

DETAIL B
SCALE 10:1

THIS DRAWING IS A CONTROLLED DOCUMENT.

DIMENSIONS: mm

TOLERANCES UNLESS OTHERWISE SPECIFIED:
0 PLC ±-
1 PLC ±0.25
2 PLC ±0.15
3 PLC ±
4 PLC ±
ANGLES ±2°

MATERIAL: SEE NOTE 1 -
FINISH: SEE NOTE 2 -

DWN: KEVIN DING 21OCT13
CHK: JASON YANG 21OCT13
APVD: JASON YANG 21OCT13
PRODUCT SPEC: 108-60102
APPLICATION SPEC: 114-60015
WEIGHT: -

TE Connectivity

NAME: CAGE AND CONNECTOR ASSEMBLY, WITH EMI GASKET, 2X3, THERMAL FOOTPRINT, ZQSFP+STACKED

SIZE: A1 | CAGE CODE: 00779 | DRAWING NO: C-2170610 | RESTRICTED TO: -

CUSTOMER DRAWING | SCALE 4:1 | SHEET 4 OF 4 | REV A

4805 (3/13)

Компания «ЭлектроПласт» предлагает заключение долгосрочных отношений при поставках импортных электронных компонентов на взаимовыгодных условиях!

Наши преимущества:

- Оперативные поставки широкого спектра электронных компонентов отечественного и импортного производства напрямую от производителей и с крупнейших мировых складов;
- Поставка более 17-ти миллионов наименований электронных компонентов;
- Поставка сложных, дефицитных, либо снятых с производства позиций;
- Оперативные сроки поставки под заказ (от 5 рабочих дней);
- Экспресс доставка в любую точку России;
- Техническая поддержка проекта, помощь в подборе аналогов, поставка прототипов;
- Система менеджмента качества сертифицирована по Международному стандарту ISO 9001;
- Лицензия ФСБ на осуществление работ с использованием сведений, составляющих государственную тайну;
- Поставка специализированных компонентов (Xilinx, Altera, Analog Devices, Intersil, Interpoint, Microsemi, Aeroflex, Peregrine, Syfer, Eurofarad, Texas Instrument, Miteq, Cobham, E2V, MA-COM, Hittite, Mini-Circuits,General Dynamics и др.);

Помимо этого, одним из направлений компании «ЭлектроПласт» является направление «Источники питания». Мы предлагаем Вам помощь Конструкторского отдела:

- Подбор оптимального решения, техническое обоснование при выборе компонента;
- Подбор аналогов;
- Консультации по применению компонента;
- Поставка образцов и прототипов;
- Техническая поддержка проекта;
- Защита от снятия компонента с производства.

Как с нами связаться

Телефон: 8 (812) 309 58 32 (многоканальный)
Факс: 8 (812) 320-02-42
Электронная почта: org@eplast1.ru
Адрес: 198099, г. Санкт-Петербург, ул. Калинина, дом 2, корпус 4, литера А.