DC-DC Converter Short Form

MPDRX303S,MPDRX304S (Ultra High Speed Response POL)

■ Features

- Ultra High Sped Response
- Wide Input range (6.2V to 13.2V)
- Wide output range (0.8V to 1.65V / 1.6V to 3.63V)
- 26A Output Current
- Wide operational temperature (-40ºC to +85ºC)
- ON/OFF / Output voltage sense / Over current function / 2 P-good function / Variable Start-up Speed function (by external capacitor)

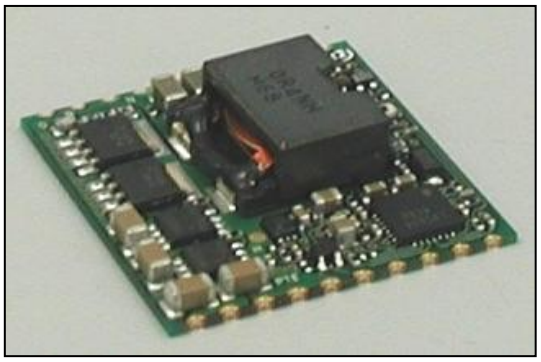

■ GENERAL SPECIFICATIONS (Ta=25ºC)

Item	Symbol	Condition	MIN.	TYP.	MAX.	UNIT
Input Voltage	Vin		6.2	9.6	13.2	V
Output Voltage Adjustable Range	Vout	MPDRX304S	0.8	-	1.65	V
		MPDRX303S	1.6		3.63	
Output Current	Iout		0	-	26	A
Ripple Voltage	Vrpl	Vin=9.6V, Vout=1.2V, Iout=26A	-	15	-	mVpp
		Vin=9.6V, Vout=3.3V, Iout=26A		20		
Efficiency	EFF	Vin=9.6V, Vout=1.2V, Iout=26A	-	84	-	%
		Vin=9.6V, Vout=3.3V, Iout=26A		90		

■ DIMENSIONS

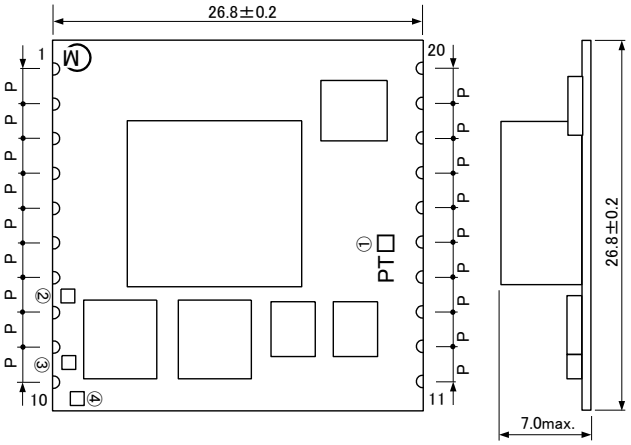

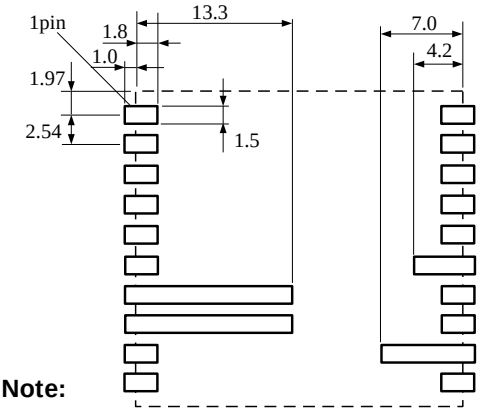

[unit : mm]

Pin No.	Symbol	Function
1	SENSE	Output voltage sense
2,3,4	Vout	Output
5,6,7, 8,13, 14,15	GND	GND
9	FT	Output trim
10	VAR	Output voltage adjustment
11,12	Vin	Input
17	SS	Soft start
18	N.C.	This pin must be left open.
19	POW-GOOD1	Power Good
20	POW-GOOD2	Power Good
16	ON/OFF	Remote ON/OFF

( )…reference value
P=2.54± 0.2mm
Tolerance is not accumulated

⚠**Note:**

1. This datasheet is downloaded from the website of Murata Manufacturing co., ltd. Therefore, it's specifications are subject to change or our products in it may be discontinued without advance notice. Please check with our sales representatives or product engineers before ordering.
2. This datasheet has only typical specifications because there is no space for detailed specifications. Therefore, please approve our product specifications or transact the approval sheet for product specifications before ordering.

■ OUTPUT VOLTAGE ADJUSTMENT

Internal Circuit

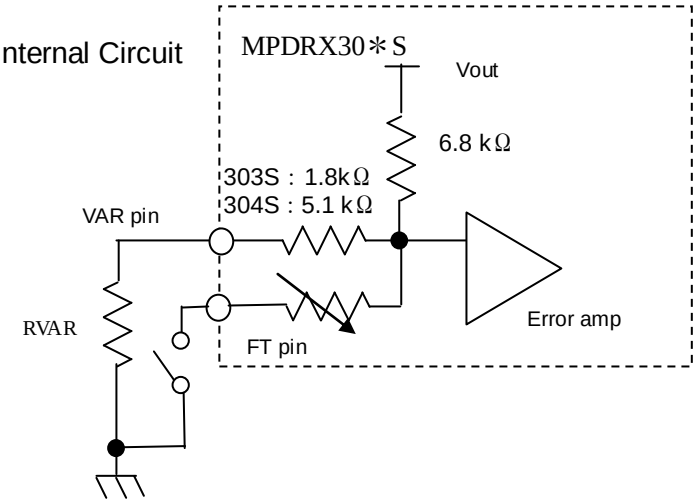

①MPDRX303S (FT-pin： SHORT to GND)

$$RVAR = \frac{5440}{Voadj[V] \times 1.002 - 1.5[V]} - 1800 \quad [\Omega]$$

②MPDRX304S

(a)0.8≦ Vout ＜0.95V (FT-pin：OPEN)

$$RVAR = \frac{5440}{Voadj[V] \times 1.002 - 0.8[V]} - 5100 \quad [\Omega]$$

(b)0.95≦ Vout ≦1.65V (FT-pin：SHORT to GND)

$$RVAR = \frac{5440}{Voadj[V] \times 1.002 - 0.95[V]} - 5100 \quad [\Omega]$$

<RVAR CALCULATION EXAMPLE>

①MPDRX303S

Voadj [V]	RVAR計算結果[Ω] Calculated RVAR[Ω]	FT pin (9pin)
3.63	745	Short to GND
3.3	1211	Short to GND
2.5	3613	Short to GND
1.8	16118	Short to GND
1.6	50913	Short to GND

②MPDRX304S

Voadj [V]	RVAR計算結果[Ω] Calculated RVAR[Ω]	FT pin (9pin)
1.65	2635	Short to GND
1.5	4737	Short to GND
1.2	16453	Short to GND
1.0	99515	Short to GND
0.95	2858058	Short to GND
0.9	48338	Open
0.8	3394900	Open

■ TEST CIRCUIT

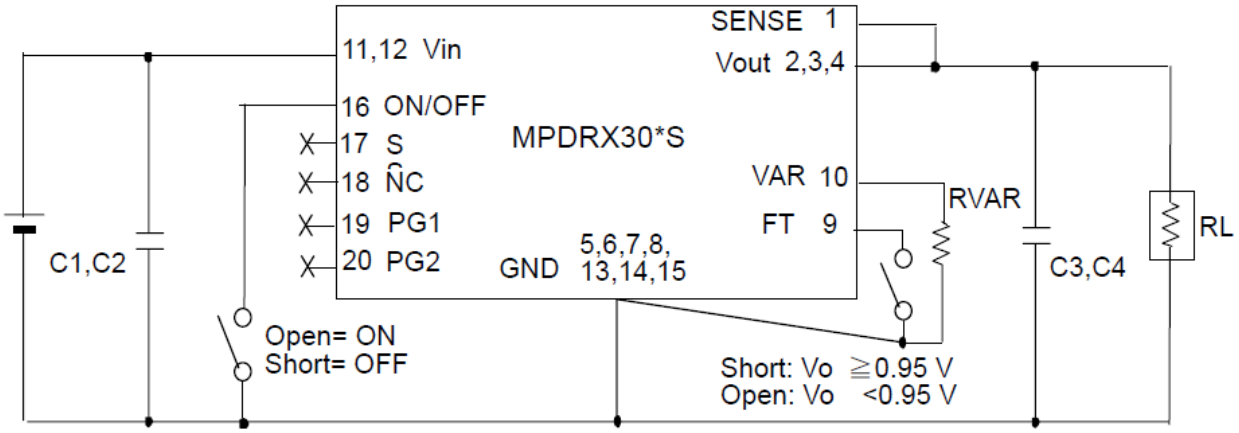

C1,C2：22μF／25V×2 （Ceramic Capacitor）
C3,C4：100μF／6.3V×2 （Ceramic Capacitor）

⚠**Note:** Please make sure to place C1,C2,C3 and C4 nearby input and output terminal of DC-DC converter.

1. This datasheet is downloaded from the website of Murata Manufacturing co., ltd. Therefore, it' s specifications are subject to change or our products in it may be discontinued without advance notice. Please check with our sales representatives or product engineers before ordering.
2. This datasheet has only typical specifications because there is no space for detailed specifications. Therefore, please approve our product specifications or transact the approval sheet for product specifications before ordering.

■ THERMAL DERATING

MPDRX303S
(Vin=6.2～12V、Vout=1.6～3.63V、
Airflow: 0,1.5m/s)

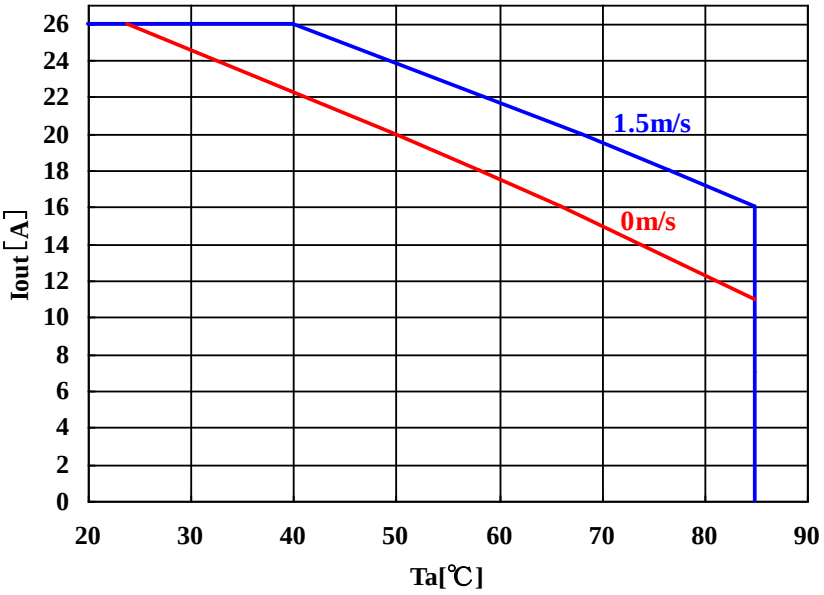

MPDRX304S
(Vin=6.2～12V、Vout=0.8～1.65V
Airflow:0,1.5m/s)

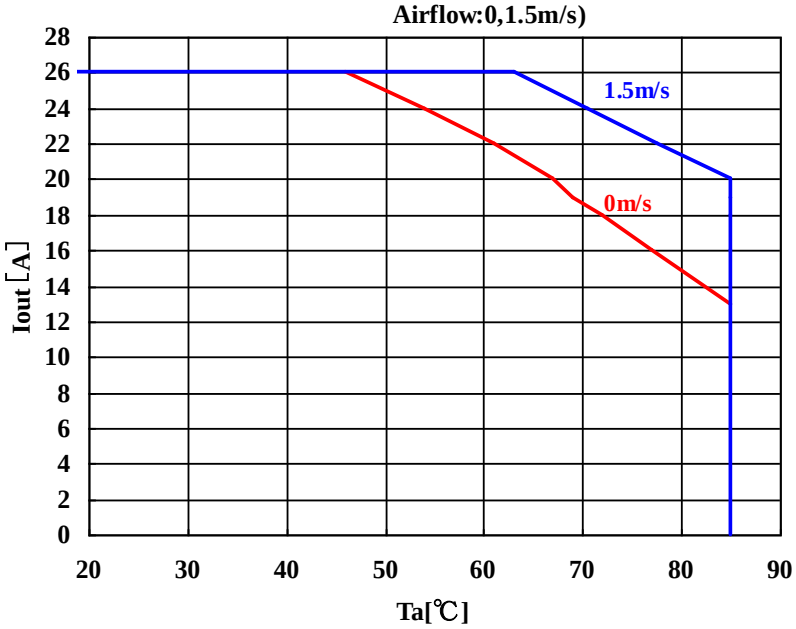

⚠Note:

1. This datasheet is downloaded from the website of Murata Manufacturing co., ltd. Therefore, it' s specifications are subject to change or our products in it may be discontinued without advance notice. Please check with our sales representatives or product engineers before ordering.
2. This datasheet has only typical specifications because there is no space for detailed specifications. Therefore, please approve our product specifications or transact the approval sheet for product specifications before ordering.

■ EFFICIENCY & REGURATION CHARACTERISTICS

MPDRX303S

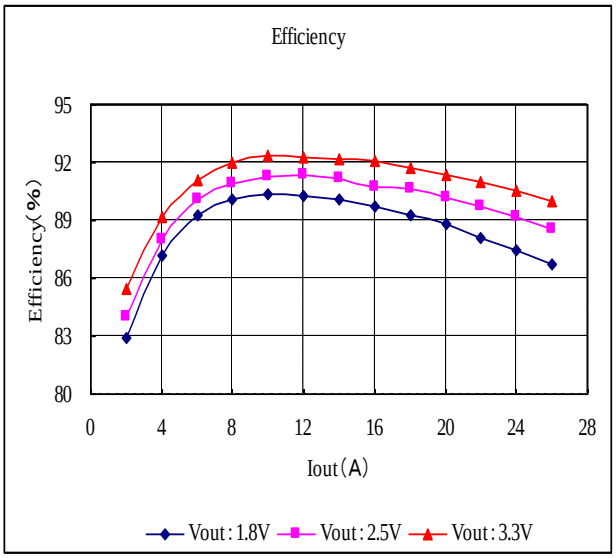

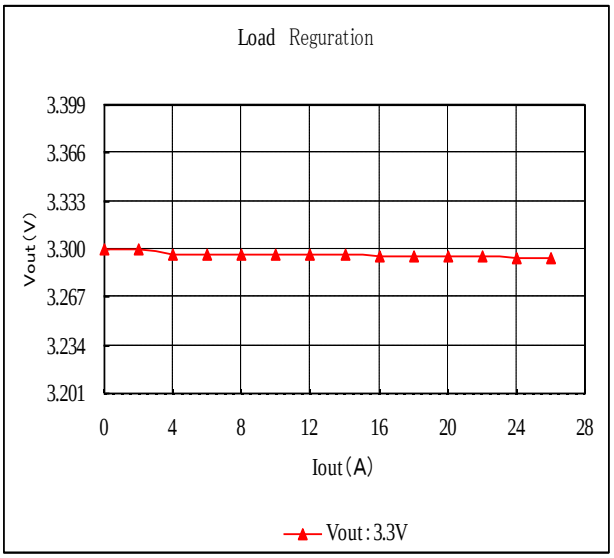

MPDRX304S

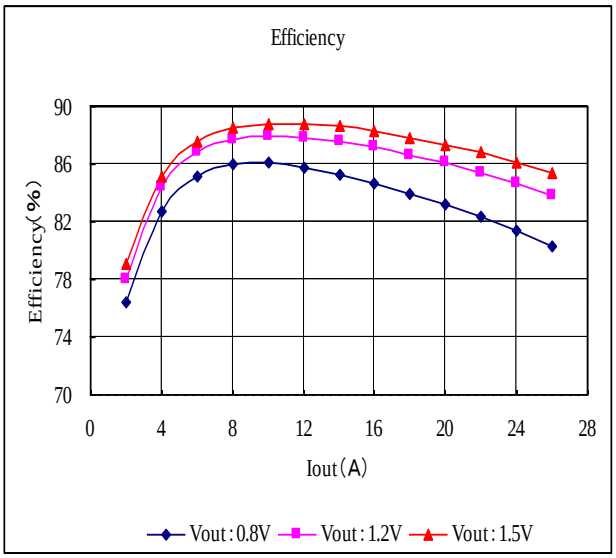

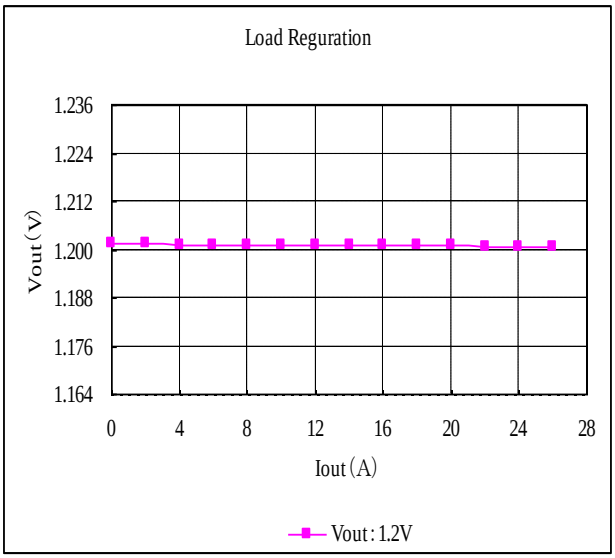

⚠Note:

1. This datasheet is downloaded from the website of Murata Manufacturing co., ltd. Therefore, it' s specifications are subject to change or our products in it may be discontinued without advance notice. Please check with our sales representatives or product engineers before ordering.
2. This datasheet has only typical specifications because there is no space for detailed specifications. Therefore, please approve our product specifications or transact the approval sheet for product specifications before ordering.

Компания «ЭлектроПласт» предлагает заключение долгосрочных отношений при поставках импортных электронных компонентов на взаимовыгодных условиях!

Наши преимущества:

- Оперативные поставки широкого спектра электронных компонентов отечественного и импортного производства напрямую от производителей и с крупнейших мировых складов;
- Поставка более 17-ти миллионов наименований электронных компонентов;
- Поставка сложных, дефицитных, либо снятых с производства позиций;
- Оперативные сроки поставки под заказ (от 5 рабочих дней);
- Экспресс доставка в любую точку России;
- Техническая поддержка проекта, помощь в подборе аналогов, поставка прототипов;
- Система менеджмента качества сертифицирована по Международному стандарту ISO 9001;
- Лицензия ФСБ на осуществление работ с использованием сведений, составляющих государственную тайну;
- Поставка специализированных компонентов (Xilinx, Altera, Analog Devices, Intersil, Interpoint, Microsemi, Aeroflex, Peregrine, Syfer, Eurofarad, Texas Instrument, Miteq, Cobham, E2V, MA-COM, Hittite, Mini-Circuits,General Dynamics и др.);

Помимо этого, одним из направлений компании «ЭлектроПласт» является направление «Источники питания». Мы предлагаем Вам помощь Конструкторского отдела:

- Подбор оптимального решения, техническое обоснование при выборе компонента;
- Подбор аналогов;
- Консультации по применению компонента;
- Поставка образцов и прототипов;
- Техническая поддержка проекта;
- Защита от снятия компонента с производства.

Как с нами связаться

Телефон: 8 (812) 309 58 32 (многоканальный)
Факс: 8 (812) 320-02-42
Электронная почта: org@eplast1.ru
Адрес: 198099, г. Санкт-Петербург, ул. Калинина, дом 2, корпус 4, литера А.