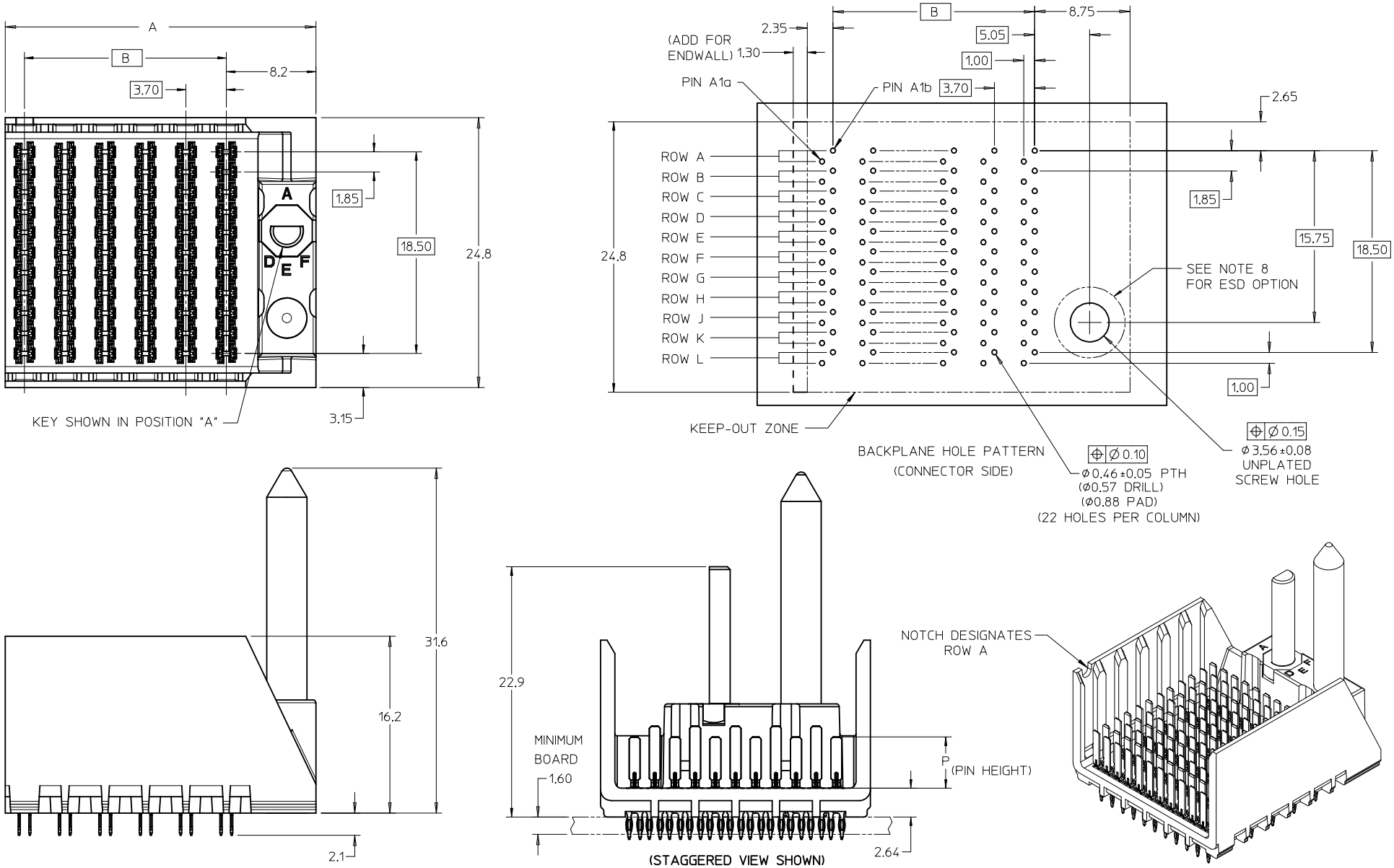

LEADFREE CONVERS. EC NO: UCP2013-1898 DRWN:MPOFF 2012/11/12 CH'KD:MWOLFE 2012/11/12 APPR:SMILLER 2012/12/21	QUALITY SYMBOLS	GENERAL TOLERANCES (UNLESS SPECIFIED)	DIMENSION STYLE MM ONLY	SCALE 4:1	DESIGN UNITS METRIC	THIRD ANGLE PROJECTION
		mm / INCH	DRAWN BY JLAURX DATE 2/21/05	TITLE I-TRAC BACKPLANE HEADER GUIDE RIGHT ASSEMBLY SALES DRAWING		
		4 PLACES ± --- ± ---	CHECKED BY BPISZCZOR DATE 6/02/06			
		3 PLACES ± --- ± ---	APPROVED BY CBIXLER DATE 6/02/06	molex		
		2 PLACES ± 0.13 ± ---	MATERIAL NO. SEE TABLE	DOCUMENT NO. SD-75705-004	SHEET NO. 1 OF 4	
		1 PLACE ± 0.25 ± ---	SIZE C	THIS DRAWING CONTAINS INFORMATION THAT IS PROPRIETARY TO MOLEX INCORPORATED AND SHOULD NOT BE USED WITHOUT WRITTEN PERMISSION		
		0 PLACE ± ±				
		ANGULAR ±1/2°				
		DRAFT WHERE APPLICABLE MUST REMAIN WITHIN DIMENSIONS				

REV E DESCRIPTION

tb_frame_C_P_AM_T Rev. G 2012/01/11

75705-****

MODULE TYPE -- TAIL PLATING TYPE
GUIDE RIGHT -- TIN ONLY = 4 (PREVIOUSLY TIN/LEAD)
GUIDE RIGHT -- TIN ONLY = 5
GUIDE RIGHT W/END -- TIN ONLY = 8 (PREVIOUSLY TIN/LEAD)
GUIDE RIGHT W/END -- TIN ONLY = 9

# OF COLUMNS
5 = 5 COL
6 = 6 COL
8 = 8 COL
1 = 10 COL

KEY ORIENTATION
0 = NO KEY
1 = A
2 = B
3 = C
4 = D
5 = E
6 = F
7 = G
8 = H

PIN LENGTH (P)
2 = 3.90 - 30 GOLD
3 = 4.70 - 30 GOLD
4 = 5.70 - 30 GOLD
5 = 4.70 & 5.70 - 30 GOLD STAGGERED
6 = 3.90 - 10 GOLD
7 = 4.70 - 10 GOLD
8 = 5.70 - 10 GOLD
9 = 4.70 & 5.70 - 10 GOLD STAGGERED

MATERIAL NUMBER	# OF COLUMNS	DIM "A"	DIM "B"
75705-*5**	5	24.8	14.80
75705-*6**	6	28.5	18.50
75705-*8**	8	35.9	25.90
75705-*1**	10	43.3	33.30

GUIDE RIGHT STYLE

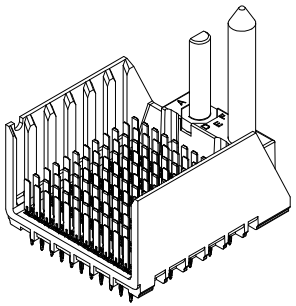

MATERIAL NUMBER	# OF COLUMNS	DIM "A"	DIM "B"
75705-*5**	5	26.1	14.80
75705-*6**	6	29.8	18.50
75705-*8**	8	37.2	25.90
75705-*1**	10	44.6	33.30

GUIDE RIGHT W/END STYLE

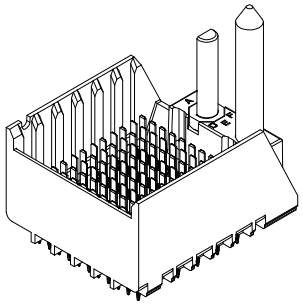

NOTES:
1. MATERIALS: HOUSING - LIQUID CRYSTAL POLYMER (LCP) GLASS-FILLED, UL94V-0
   TERMINALS - HIGH PERFORMANCE COPPER ALLOY
2. FINISH: 10 MICROINCH MINIMUM GOLD OR 30 MICROINCH MINIMUM GOLD IN CONTACT AREA. SELECTIVE MATTE TIN ON PCB TAILS. NICKEL OVERALL.
3. REFER TO MOLEX PRODUCT SPECIFICATION PS-75710-999 FOR PERFORMANCE SPECIFICATIONS.
4. FOR MIXED CONTACT MATING LENGTHS, CONSULT MOLEX FOR AVAILABLITY.
5. THIS PART CONFORMS TO CLASS B REQUIREMENTS OF MOLEX COSMETIC SPEC PS-45499-002.
6. PACKAGE PER: PK-70873-587.
7. GUIDED PARTS TO BE SHIPPED WITH 2-56 UNC B SCREW P/N 73774-1000.
8. FOR GROUNDED GUIDE PINS USE DIA 3.56+/-0.08 (PTH) DIA 3.66 (DRILL), AND DIA 6.5 (PAD).
9. REFER TO PCB ROUTING GUIDE FOR ANTIPAD AND ROUTING RECOMMENDATIONS.

SEE SHEET 1
EC NO: UCP2013-1898
DRWN:MPOFF 2012/11/12
CH'KD:MWOLFE 2012/11/12
APPR:SMILLER 2012/12/21
E
REV DESCRIPTION

QUALITY SYMBOLS
F/A =0
F/C =0
F/P =0

GENERAL TOLERANCES (UNLESS SPECIFIED)

	mm	INCH
4 PLACES	± ---	± ---
3 PLACES	± ---	± ---
2 PLACES	± 0.13	± ---
1 PLACE	± 0.25	± ---
0 PLACE	±	±

ANGULAR ±1/2°
DRAFT WHERE APPLICABLE MUST REMAIN WITHIN DIMENSIONS

DIMENSION STYLE: MM ONLY
SCALE: 4:1
DESIGN UNITS: METRIC
THIRD ANGLE PROJECTION

DRAWN BY: JLAURX DATE: 2/21/05
CHECKED BY: BPISZCZOR DATE: 6/02/06
APPROVED BY: CBIXLER DATE: 6/02/06
MATERIAL NO.: SEE TABLE

TITLE: I-TRAC BACKPLANE HEADER GUIDE RIGHT ASSEMBLY SALES DRAWING

molex

DOCUMENT NO.: SD-75705-004
SHEET NO.: 2 OF 4
SIZE: C

THIS DRAWING CONTAINS INFORMATION THAT IS PROPRIETARY TO MOLEX INCORPORATED AND SHOULD NOT BE USED WITHOUT WRITTEN PERMISSION

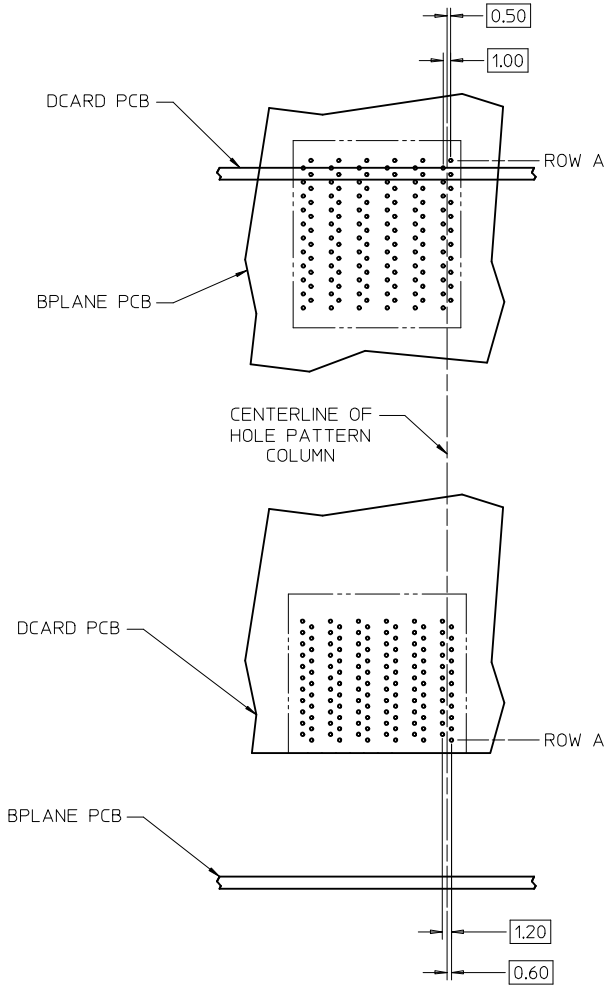

I-TRAC 11 ROW BOARD RELATIONSHIPS

SCALE 2:1

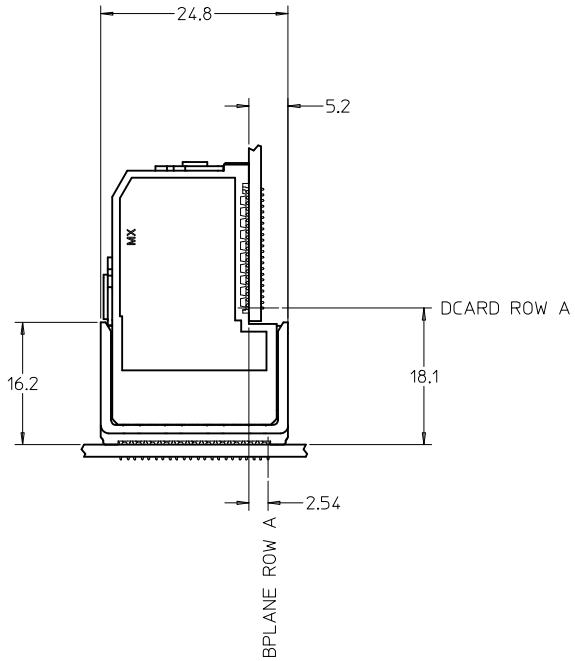

SEE SHEET 1 EC NO: UCP2013-1898 DRWN:MPOFF 2012/11/12 CH'KD:MWOLFE 2012/11/12 APPR:SMILLER 2012/12/21 E	REV	DESCRIPTION	QUALITY SYMBOLS F_A =0 F_C =0 F_P =0	GENERAL TOLERANCES (UNLESS SPECIFIED) mm / INCH 4 PLACES ± --- / ± --- 3 PLACES ± --- / ± --- 2 PLACES ± 0.13 / ± --- 1 PLACE ± 0.25 / ± --- 0 PLACE ± / ± ANGULAR ±1/2° DRAFT WHERE APPLICABLE MUST REMAIN WITHIN DIMENSIONS	DIMENSION STYLE MM ONLY DRAWN BY JLAURX DATE 2/21/05 CHECKED BY BPISZCZOR DATE 6/02/06 APPROVED BY CBIXLER DATE 6/02/06 MATERIAL NO. SEE TABLE	SCALE 4:1 DESIGN UNITS METRIC THIRD ANGLE PROJECTION TITLE I-TRAC BACKPLANE HEADER GUIDE RIGHT ASSEMBLY SALES DRAWING molex DOCUMENT NO. SD-75705-004 SHEET NO. 3 OF 4	
					SIZE C	THIS DRAWING CONTAINS INFORMATION THAT IS PROPRIETARY TO MOLEX INCORPORATED AND SHOULD NOT BE USED WITHOUT WRITTEN PERMISSION	

tb_frame_C_P_AM_T
Rev. G 2012/01/11

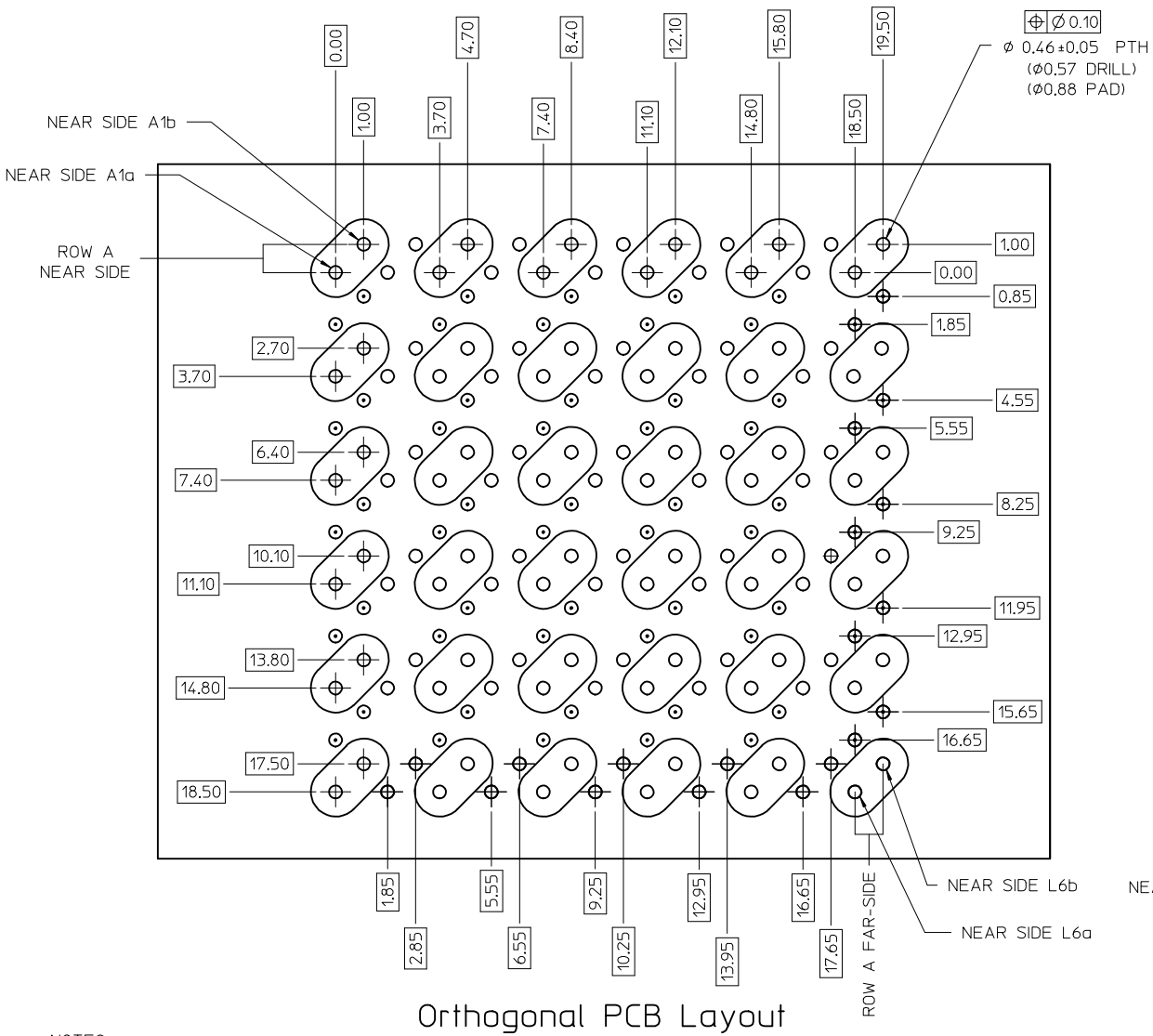

Orthogonal PCB Layout

ORTHO PIN MAPPING					
OPTION 90 (NEAR SIDE - FAR SIDE)					
A1b-L6b	A2b-J6b	A3b-G6b	A4b-E6b	A5b-C6b	A6b-A6b
A1a-L6a	A2a-J6a	A3a-G6a	A4a-E6a	A5a-C6a	A6a-A6a
C1b-L5b	C2b-J5b	C3b-G5b	C4b-E5b	C5b-C5b	C6b-A5b
C1a-L5a	C2a-J5a	C3a-G5a	C4a-E5a	C5a-C5a	C6a-A5a
E1b-L4b	E2b-J4b	E3b-G4b	E4b-E4b	E5b-C4b	E6b-A4b
E1a-L4a	E2a-J4a	E3a-G4a	E4a-E4a	E5a-C4a	E6a-A4a
G1b-L3b	G2b-J3b	G3b-G3b	G4b-E3b	G5b-C3b	G6b-A3b
G1a-L3a	G2a-J3a	G3a-G3a	G4a-E3a	G5a-C3a	G6a-A3a
J1b-L2b	J2b-J2b	J3b-G2b	J4b-E2b	J5b-C2b	J6b-A2b
J1a-L2a	J2a-J2a	J3a-G2a	J4a-E2a	J5a-C2a	J6a-A2a
L1b-L1b	L2b-J1b	L3b-G1b	L4b-E1b	L5b-C1b	L6b-A1b
L1a-L1a	L2a-J1a	L3a-G1a	L4a-E1a	L5a-C1a	L6a-A1a

ORTHO PIN MAPPING					
OPTION 270 (NEAR SIDE - FAR SIDE)					
A1b-A1a	A2b-C1a	A3b-E1a	A4b-G1a	A5b-J1a	A6b-L1a
A1a-A1b	A2a-C1b	A3a-E1b	A4a-G1b	A5a-J1b	A6a-L1b
C1b-A2a	C2b-C2a	C3b-E2a	C4b-G2a	C5b-J2a	C6b-L2a
C1a-A2b	C2a-C2b	C3a-E2b	C4a-G2b	C5a-J2b	C6a-L2b
E1b-A3a	E2b-C3a	E3b-E3a	E4b-G3a	E5b-J3a	E6b-L3a
E1a-A3b	E2a-C3b	E3a-E3b	E4a-G3b	E5a-J3b	E6a-L3b
G1b-A4a	G2b-C4a	G3b-E4a	G4b-G4a	G5b-J4a	G6b-L4a
G1a-A4b	G2a-C4b	G3a-E4b	G4a-G4b	G5a-J4b	G6a-L4b
J1b-A5a	J2b-C5a	J3b-E5a	J4b-G5a	J5b-J5a	J6b-L5a
J1a-A5b	J2a-C5b	J3a-E5b	J4a-G5b	J5a-J5b	J6a-L5b
L1b-A6a	L2b-C6a	L3b-E6a	L4b-G6a	L5b-J6a	L6b-L6a
L1a-A6b	L2a-C6b	L3a-E6b	L4a-G6b	L5a-J6b	L6a-L6b

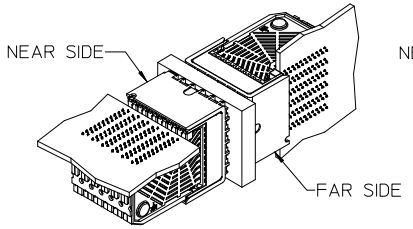

OPTION 90

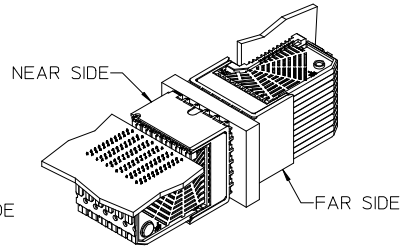

OPTION 270

NOTES:

SIGNAL PAIRS (SHARED VIAS)

NEAR SIDE GROUNDS

FAR SIDE GROUNDS

SEE SHEET 1			
EC NO: UCP2013-1898	2012/11/12		
DRWN:MPOFF	2012/11/12		
CH'KD:MWOLFE	2012/12/21		
APPR:SMILLER			
DESCRIPTION			
REV			

QUALITY SYMBOLS: =0 =0 =0

GENERAL TOLERANCES (UNLESS SPECIFIED)

	mm	INCH
4 PLACES	± ---	± ---
3 PLACES	± ---	± ---
2 PLACES	± 0.13	± ---
1 PLACE	± 0.25	± ---
0 PLACE	±	±
ANGULAR ±1/2°		

DRAFT WHERE APPLICABLE MUST REMAIN WITHIN DIMENSIONS

DIMENSION STYLE: MM ONLY

SCALE: 4:1

DESIGN UNITS: METRIC

THIRD ANGLE PROJECTION

DRAWN BY: JLAURX	DATE: 2/21/05	
CHECKED BY: BPISZCZOR	DATE: 6/02/06	
APPROVED BY: CBIXLER	DATE: 6/02/06	
MATERIAL NO.: SEE TABLE		

TITLE: I-TRAC BACKPLANE HEADER GUIDE RIGHT ASSEMBLY SALES DRAWING

molex

DOCUMENT NO.: SD-75705-004

SHEET NO.: 4 OF 4

SIZE: C

THIS DRAWING CONTAINS INFORMATION THAT IS PROPRIETARY TO MOLEX INCORPORATED AND SHOULD NOT BE USED WITHOUT WRITTEN PERMISSION

Компания «ЭлектроПласт» предлагает заключение долгосрочных отношений при поставках импортных электронных компонентов на взаимовыгодных условиях!

Наши преимущества:

- Оперативные поставки широкого спектра электронных компонентов отечественного и импортного производства напрямую от производителей и с крупнейших мировых складов;
- Поставка более 17-ти миллионов наименований электронных компонентов;
- Поставка сложных, дефицитных, либо снятых с производства позиций;
- Оперативные сроки поставки под заказ (от 5 рабочих дней);
- Экспресс доставка в любую точку России;
- Техническая поддержка проекта, помощь в подборе аналогов, поставка прототипов;
- Система менеджмента качества сертифицирована по Международному стандарту ISO 9001;
- Лицензия ФСБ на осуществление работ с использованием сведений, составляющих государственную тайну;
- Поставка специализированных компонентов (Xilinx, Altera, Analog Devices, Intersil, Interpoint, Microsemi, Aeroflex, Peregrine, Syfer, Eurofarad, Texas Instrument, Miteq, Cobham, E2V, MA-COM, Hittite, Mini-Circuits,General Dynamics и др.);

Помимо этого, одним из направлений компании «ЭлектроПласт» является направление «Источники питания». Мы предлагаем Вам помощь Конструкторского отдела:

- Подбор оптимального решения, техническое обоснование при выборе компонента;
- Подбор аналогов;
- Консультации по применению компонента;
- Поставка образцов и прототипов;
- Техническая поддержка проекта;
- Защита от снятия компонента с производства.

Как с нами связаться

Телефон: 8 (812) 309 58 32 (многоканальный)
Факс: 8 (812) 320-02-42
Электронная почта: org@eplast1.ru
Адрес: 198099, г. Санкт-Петербург, ул. Калинина, дом 2, корпус 4, литера А.