4-, 5-, 6-Channel, Muxed Input Line Inversion LCD Gamma Buffers

ADD8504/ADD8505/ADD8506

FEATURES

Single-supply operation: 3.3 V to 6.5 V
Rail-to-rail input, rail-to-rail output
High output current: 380 mA
Low supply current: 3.9 mA
Stable with 1 nF loads
Wide temperature range: −40°C to +105°C
16-, 20-, and 24-lead, Pb-free, TSSOP packages
Qualified for automotive applications

APPLICATIONS

LCD line inversion gamma references
Car navigation panels
Personal media player panels
Automotive infotainment systems

GENERAL DESCRIPTION

The ADD8504, ADD8505, and ADD8506 are 4-, 5-, and 6-channel LCD gamma reference buffers designed to drive column driver gamma inputs in line inversion panels. Each buffer channel has an A/B input to select between two gamma voltage curves. These buffer channels drive the resistor ladders of LCD column drivers for gamma correction. The ADD8504/ADD8505/ADD8506 outputs have high slew rates and output drives that increase the stability of the reference ladder resulting in optimal gray scale and visual performance.

The ADD8504/ADD8505/ADD8506 are specified over the −40°C to +105°C temperature range. They are available, respectively, in 16-, 20-, and 24-lead thin shrink small outline (TSSOP), surface-mount, Pb-free packages. The ADD8506 is also offered in a leaded TSSOP.

The ADD8506WWARUZR7 is the automotive grade version.

PIN CONFIGURATION DIAGRAMS

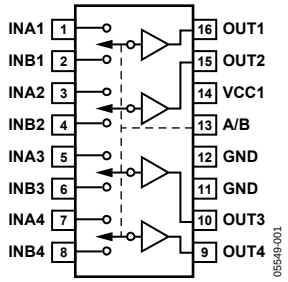

Figure 1. ADD8504, 4-Channel Buffer

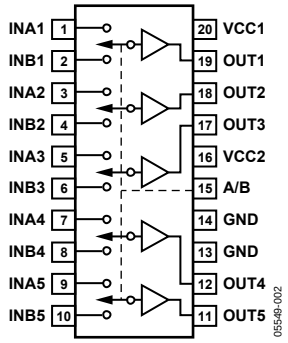

Figure 2. ADD8505, 5-Channel Buffer

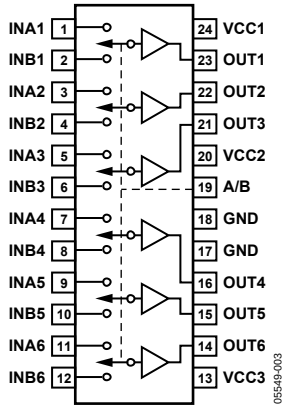

Figure 3. ADD8506, 6-Channel Buffer

Rev. D
Information furnished by Analog Devices is believed to be accurate and reliable. However, no responsibility is assumed by Analog Devices for its use, nor for any infringements of patents or other rights of third parties that may result from its use. Specifications subject to change without notice. No license is granted by implication or otherwise under any patent or patent rights of Analog Devices. Trademarks and registered trademarks are the property of their respective owners.

One Technology Way, P.O. Box 9106, Norwood, MA 02062-9106, U.S.A.
Tel: 781.329.4700 **www.analog.com**
Fax: 781.461.3113 **©2005–2010 Analog Devices, Inc. All rights reserved.**

TABLE OF CONTENTS

Features ... 1
Applications ... 1
General Description ... 1
Pin Configuration Diagrams ... 1
Revision History ... 2
Specifications ... 3
Electrical Characteristics ... 3
Absolute Maximum Ratings ... 4
Thermal Resistance ... 4
ESD Performance ... 4
ESD Caution ... 4
Pin Configurations and Function Descriptions ... 5
Typical Performance Characteristics ... 6
Applications Information ... 7
Outline Dimensions ... 8
Ordering Guide ... 9
Automotive Ordering Guide ... 9
Automotive Products ... 9

REVISION HISTORY

6/10—Rev. C to Rev. D

Change to Features Section, Applications Section, and General Description Section ... 1
Changes to Ordering Guide ... 9
Added Automotive Ordering Guide and Automotive Products Section ... 9

9/07—Rev. B to Rev. C

Change to General Description ... 1
Change to Ordering Guide ... 9

1/06—Rev. A to Rev. B

Added Pin Configurations and Function Descriptions Section ... 5
Added Table 5 ... 8

10/05—Rev. 0 to Rev. A

Added ADD8504 and ADD8505 ... Universal
Changes to Specifications Section ... 3
Updated Outline Dimensions ... 7
Changes to Ordering Guide ... 7

9/05—Revision 0: Initial Version

SPECIFICATIONS

ELECTRICAL CHARACTERISTICS

V_{CC} = 5 V, T_A = 25°C, unless otherwise noted. V_{IN} denotes buffer input voltage; I_{LOAD} denotes load current; R_L denotes load resistance; C_L denotes load capacitance.

Table 1.

Parameter	Symbol	Conditions	Min	Typ	Max	Unit
INPUT CHARACTERISTICS						
Offset Voltage	V_{OS}	0 V ≤ V_{IN} ≤ 5 V			20	mV
Input Common-Mode Voltage Range	V_{CM}		0		5	V
Input Bias Current	I_B	V_{IN} = 2.5 V		2	50	nA
Voltage Gain	A_{VO}		0.985			V/V
OUTPUT CHARACTERISTICS						
Output Voltage High	V_{OH}	I_{LOAD} = +20 mA	4.75			V
Output Voltage Low	V_{OL}	I_{LOAD} = −20 mA			0.2	V
Output Resistance	R_{OUT}	−20 mA ≤ I_{LOAD} ≤ +20 mA; 0.5 V ≤ V_{IN} ≤ 4.5 V		0.20		Ω
Output Short-Circuit Current	I_{SC}		120	380		mA
POWER SUPPLY						
Supply Current	I_{SY}	V_{IN} = 2.5 V				
ADD8504				2.7	3.8	mA
ADD8505				3.0	4.4	mA
ADD8506				3.9	5.1	mA
Supply Voltage Range	V_{CC}		3.3		6.5	V
DYNAMIC PERFORMANCE						
Slew Rate	SR	C_L = 15 pF		7.0		V/µs
		R_L = 250 Ω		6.2		V/µs
Settling Time	t_S	C_L = 200 pF, R_L = 10 kΩ		2.5	6	µs
LOGIC INPUT CHARACTERISTICS						
Input Current Low	I_{IL}	V_{IN} = 0.0 V			100	nA
Input Current High	I_{IH}	V_{IN} = 5.0 V			100	nA
Input Voltage Low	V_{IL}	V_{CC} = 5.0 V, −40°C ≤ T_A ≤ 105°C			0.8	V
		V_{CC} = 3.3 V, −40°C ≤ T_A ≤ 105°C			0.7	V
Input Voltage High	V_{IH}	V_{CC} = 5.0 V, −40°C ≤ T_A ≤ 105°C	1.7			V
		V_{CC} = 3.3 V, −40°C ≤ T_A ≤ 105°C	1.4			V

ABSOLUTE MAXIMUM RATINGS

Table 2.

Parameter	Rating
Supply Voltage	7 V
Input Voltage	GND to V_{CC}
Storage Temperature Range	−65°C to +150°C
Junction Temperature Range	−65°C to +150°C
Lead Temperature (Soldering, 60 sec)	300°C

Stresses above those listed under Absolute Maximum Ratings may cause permanent damage to the device. This is a stress rating only; functional operation of the device at these or any other conditions above those indicated in the operational section of this specification is not implied. Exposure to absolute maximum rating conditions for extended periods may affect device reliability.

THERMAL RESISTANCE

Table 3. Thermal Package Characteristics

Model	Package Type	θ_{JA}[1]	θ_{JC}[2]	Unit
ADD8504WRUZ	16-Lead Pb-Free TSSOP	150	28	°C/W
ADD8505WRUZ	20-Lead Pb-Free TSSOP	143	45	°C/W
ADD8506WRUZ	24-Lead Pb-Free TSSOP	128	45	°C/W

[1] θ_{JA} is specified for natural convection on a two-layer board.
[2] θ_{JC} is specified for natural convection on a two-layer board.

ESD PERFORMANCE

Table 4.

Model	HBM[1]	MM[2]	FICDM[3]
ADD8504WRUZ	4.0 kV	400 V	1.0 kV
ADD8505WRUZ	3.5 kV	200 V	1.0 kV
ADD8506WRUZ	3.5 kV	200 V	1.0 kV

[1] Human body model.
[2] Machine model.
[3] Field induced charge device model.

ESD CAUTION

ESD (electrostatic discharge) sensitive device. Charged devices and circuit boards can discharge without detection. Although this product features patented or proprietary protection circuitry, damage may occur on devices subjected to high energy ESD. Therefore, proper ESD precautions should be taken to avoid performance degradation or loss of functionality.

PIN CONFIGURATIONS AND FUNCTION DESCRIPTIONS

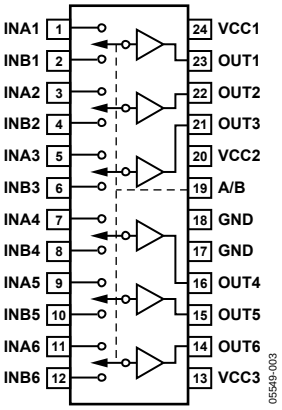

Figure 4. Pin Configuration, ADD8506, 6-Channel Buffer

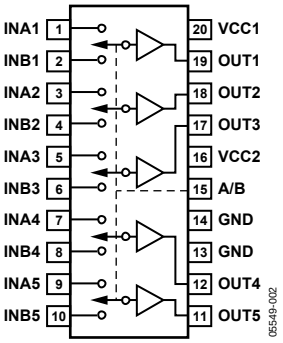

Figure 5. Pin Configuration, ADD8505, 5-Channel Buffer

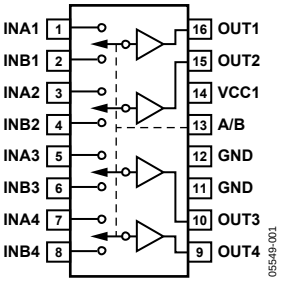

Figure 6. Pin Configuration, ADD8504, 4-Channel Buffer

Table 5. Pin Function Descriptions

ADD8506 Pin No.	ADD8505 Pin No.	ADD8504 Pin No.	Mnemonic	Function	Description
1	1	1	INA1	Input	Channel 1 Buffer Input A.
2	2	2	INB1	Input	Channel 1 Buffer Input B.
3	3	3	INA2	Input	Channel 2 Buffer Input A.
4	4	4	INB2	Input	Channel 2 Buffer Input B.
5	5	5	INA3	Input	Channel 3 Buffer Input A.
6	6	6	INB3	Input	Channel 3 Buffer Input B.
7	7	7	INA4	Input	Channel 4 Buffer Input A.
8	8	8	INB4	Input	Channel 4 Buffer Input B.
9	9	N/A	INA5	Input	Channel 5 Buffer Input A.
10	10	N/A	INB5	Input	Channel 5 Buffer Input B.
11	N/A	N/A	INA6	Input	Channel 6 Buffer Input A.
12	N/A	N/A	INB6	Input	Channel 6 Buffer Input B.
13	N/A	N/A	VCC3	Power In	Power Supply Input. Short to VCC1 and VCC2. Typically connected to 5 V.
14	N/A	N/A	OUT6	Output	Channel 6 Buffer Output.
15	11	N/A	OUT5	Output	Channel 5 Buffer Output.
16	12	9	OUT4	Output	Channel 4 Buffer Output.
17, 18	13, 14	11, 12	GND	Ground	Ground.
19	15	13	A/B	Input	Switch Control. Logic High selects Input A; Logic Low selects Input B.
20	16	N/A	VCC2	Power In	Power Supply Input. Short to VCC1 and VCC3. Typically connected to 5 V.
21	17	10	OUT3	Output	Channel 3 Buffer Output.
22	18	15	OUT2	Output	Channel 2 Buffer Output.
23	19	16	OUT1	Output	Channel 1 Buffer Output.
24	20	14	VCC1	Power In	Power Supply Input. Short to VCC2 and VCC3. Typically connected to 5 V.

TYPICAL PERFORMANCE CHARACTERISTICS

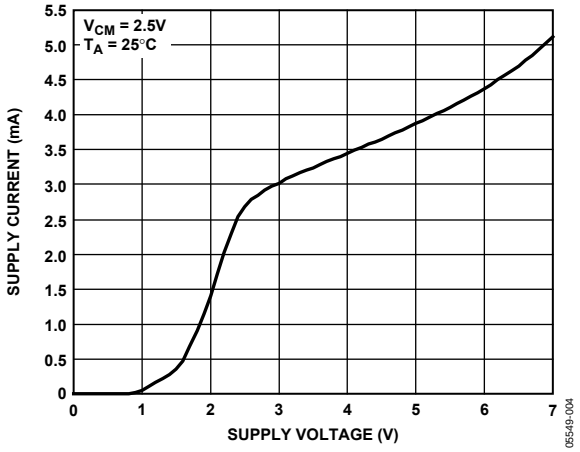

Figure 7. Supply Current vs. Supply Voltage

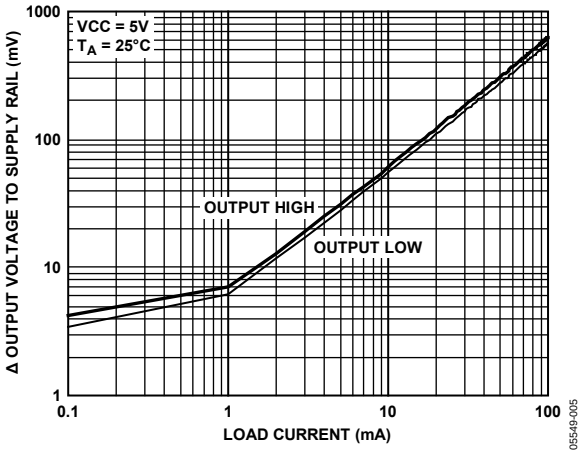

Figure 8. Δ Output Voltage to Supply Rail vs. Load Current

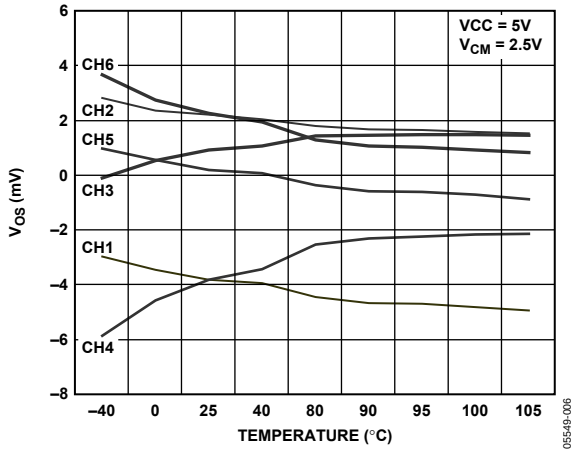

Figure 9. Offset Voltage vs. Temperature

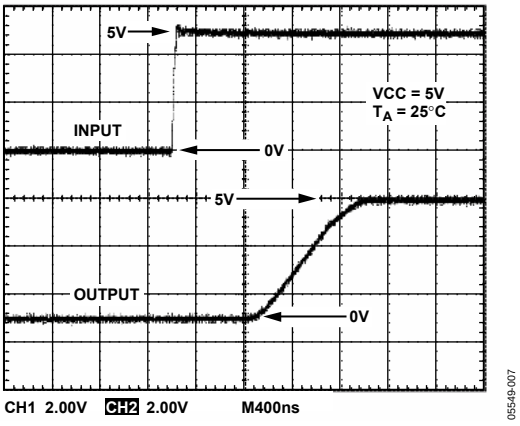

Figure 10. Transient Response—Rising

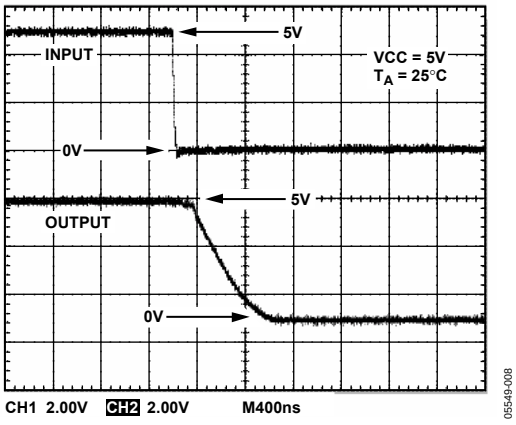

Figure 11. Transient Response—Falling

APPLICATIONS INFORMATION

The ADD8504/ADD8505/ADD8506 have CMOS buffers with A/B inputs to select between two different reference voltages set up by an external resistor ladder. Input bias currents are orders of magnitude less than competitive parts. This allows the use of a very large resistor ladder to save supply current.

The buffer outputs are designed to drive resistive or capacitive loads. Therefore, to attain the best display performance, do not use resistors in series with these outputs. Outputs have high slew rates and 6 µs settling times. Each output delivers a minimum of 120 mA, ensuring a fast response to varying loads.

Power supply pins on the ADD8505 and ADD8506 have multiple ground (GND) and supply (VCC) connections. Because of the high peak currents that these buffers deliver, it is recommended that all GND and VCC pins be connected and suitably bypassed.

Table 6. Mux Function

A/B Select	Input
Logic High	INAx
Logic Low	INBx

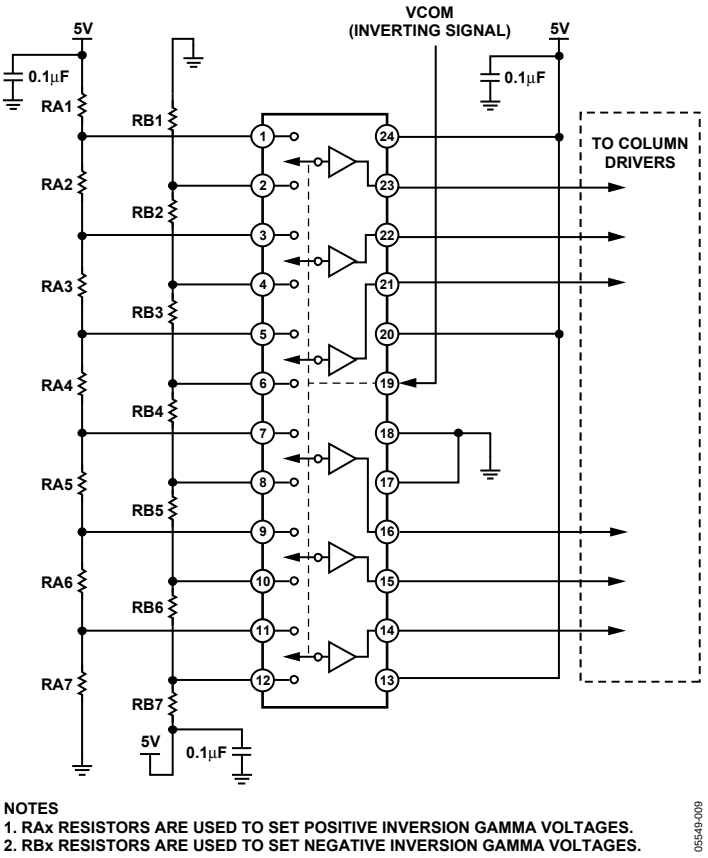

Figure 12. ADD8506 Typical Application

OUTLINE DIMENSIONS

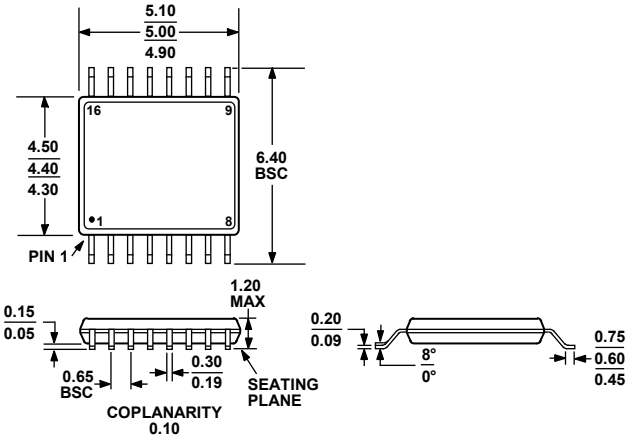

COMPLIANT TO JEDEC STANDARDS MO-153-AB

Figure 13. 16-Lead Thin Shrink Small Outline Package [TSSOP] (RU-16)
Dimensions shown in millimeters

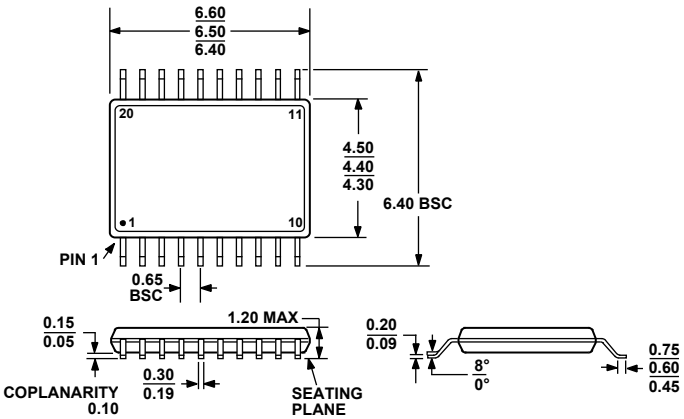

COMPLIANT TO JEDEC STANDARDS MO-153-AC

Figure 14. 20-Lead Thin Shrink Small Outline Package [TSSOP] (RU-20)
Dimensions shown in millimeters

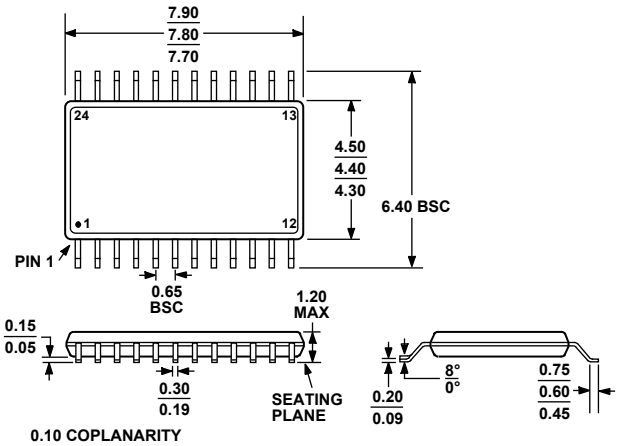

COMPLIANT TO JEDEC STANDARDS MO-153-AD

Figure 15. 24-Lead Thin Shrink Small Outline Package [TSSOP] (RU-24)
Dimensions shown in millimeters

ORDERING GUIDE

Model[1]	Temperature Range	Package Description	Package Option	Ordering Quantity
ADD8504WRUZ	−40°C to +105°C	16-Lead Thin Shrink Small Outline Package [TSSOP], Tube	RU-16	96
ADD8504WRUZ-REEL7	−40°C to +105°C	16-Lead Thin Shrink Small Outline Package [TSSOP], 7″ Tape and Reel	RU-16	1,000
ADD8504WRUZ-REEL	−40°C to +105°C	16-Lead Thin Shrink Small Outline Package [TSSOP], 13″ Tape and Reel	RU-16	2,500
ADD8505WRUZ	−40°C to +105°C	20-Lead Thin Shrink Small Outline Package [TSSOP], Tube	RU-20	75
ADD8505WRUZ-REEL7	−40°C to +105°C	20-Lead Thin Shrink Small Outline Package [TSSOP], 7″ Tape and Reel	RU-20	1,000
ADD8505WRUZ-REEL	−40°C to +105°C	20-Lead Thin Shrink Small Outline Package [TSSOP], 13″ Tape and Reel	RU-20	2,500
ADD8506WRU-REEL7	−40°C to +105°C	24-Lead Thin Shrink Small Outline Package [TSSOP], 7″ Tape and Reel	RU-24	1,000
ADD8506WRUZ	−40°C to +105°C	24-Lead Thin Shrink Small Outline Package [TSSOP], Tube	RU-24	62
ADD8506WRUZ-REEL7	−40°C to +105°C	24-Lead Thin Shrink Small Outline Package [TSSOP], 7″ Tape and Reel	RU-24	1,000
ADD8506WRUZ-REEL	−40°C to +105°C	24-Lead Thin Shrink Small Outline Package [TSSOP], 13″ Tape and Reel	RU-24	2,500
ADD8504-EVAL		Evaluation Board		
ADD8505-EVAL		Evaluation Board		
ADD8506-EVAL		Evaluation Board		

[1] Z = RoHS Compliant Part.

AUTOMOTIVE ORDERING GUIDE

Automotive Model[1]	Temperature Range	Package Description	Package Option	Ordering Quantity
ADD8506WWARUZR7	−40°C to +105°C	24-Lead Thin Shrink Small Outline Package [TSSOP], 7″ Tape and Reel	RU-24	1,000

[1] Qualified for automotive applications.

AUTOMOTIVE PRODUCTS

The ADD8506WWARUZR7 model is available with controlled manufacturing to support the quality and reliability requirements of automotive applications. Note that the automotive model may have specifications that differ from the commercial models; therefore, designers should review the Specifications section of this data sheet carefully. Only the automotive grade product shown is available for use in automotive applications. Contact your local Analog Devices account representative for specific product ordering information and to obtain the specific Automotive Reliability reports for this model.

NOTES

NOTES

NOTES

©2005–2010 Analog Devices, Inc. All rights reserved. Trademarks and registered trademarks are the property of their respective owners.
D05549-0-6/10(D)

Компания «ЭлектроПласт» предлагает заключение долгосрочных отношений при поставках импортных электронных компонентов на взаимовыгодных условиях!

Наши преимущества:

- Оперативные поставки широкого спектра электронных компонентов отечественного и импортного производства напрямую от производителей и с крупнейших мировых складов;
- Поставка более 17-ти миллионов наименований электронных компонентов;
- Поставка сложных, дефицитных, либо снятых с производства позиций;
- Оперативные сроки поставки под заказ (от 5 рабочих дней);
- Экспресс доставка в любую точку России;
- Техническая поддержка проекта, помощь в подборе аналогов, поставка прототипов;
- Система менеджмента качества сертифицирована по Международному стандарту ISO 9001;
- Лицензия ФСБ на осуществление работ с использованием сведений, составляющих государственную тайну;
- Поставка специализированных компонентов (Xilinx, Altera, Analog Devices, Intersil, Interpoint, Microsemi, Aeroflex, Peregrine, Syfer, Eurofarad, Texas Instrument, Miteq, Cobham, E2V, MA-COM, Hittite, Mini-Circuits,General Dynamics и др.);

Помимо этого, одним из направлений компании «ЭлектроПласт» является направление «Источники питания». Мы предлагаем Вам помощь Конструкторского отдела:

- Подбор оптимального решения, техническое обоснование при выборе компонента;
- Подбор аналогов;
- Консультации по применению компонента;
- Поставка образцов и прототипов;
- Техническая поддержка проекта;
- Защита от снятия компонента с производства.

Как с нами связаться

Телефон: 8 (812) 309 58 32 (многоканальный)
Факс: 8 (812) 320-02-42
Электронная почта: org@eplast1.ru
Адрес: 198099, г. Санкт-Петербург, ул. Калинина, дом 2, корпус 4, литера А.