Displaytech Ltd.®
a seacomp company

Website: www.displaytech.com.hk

LCD Module
Product Specification

Product: INT057ATFT
5.7" Integrated TFT Display Module
(640RGBx480DOTS)

Contents in this document are subject to change without notice. No part of this document may be reproduced or transmitted in any form or by any means, electronic or mechanical, for any purpose, without the express written permission of Displaytech Ltd.

January 3, 2013.

1. REVISION RECORD

VERSION	CHANGES	DATE
1.0	Initial revision	15 November 2011
2.0	Change pin#38 to +5.0V at page 5 & 7.	January 2, 2013
2.1	Added voltage and current details for pin#38 at page 8	January 3, 2013

Table of Content

1. REVISION RECORD 1
2. Introduction 3
3. Features 3
4. General Specifications 4
5. Mechanical Drawing 5
6. Interface Description 7
7. Absolute Maximum Ratings 8
8. Electrical Characteristics 8
9. Display Controller /Power Supply Timing 8
10. Backlight specification 9
11. Optical Characteristics 9
12. Safety Precaution 12

2. Introduction

INT057ATFT is integrated display module based upon a TFT display with a 480 x 640 RGB resolution. The TFT module is mounted on a PCB on which is mounted a Solomon SSD1961 controller with integrated PWM driving circuit for the LED backlight. The TFT module is automatically initialised upon power up by an on-board controller circuit.

3. Features

- 8080/6800 MCU Interface (1)
- Built-in 675kbyte (5,529,600bit) frame buffer. Support up to 640 x 480 at 18bpp display
- Deep sleep mode for power saving
- Screen display rotation
- Display mirroring
- Programmable contrast and saturation control
- Auto initialisation (2)
- Embedded PWM control and LED driving circuit for backlight

Remarks:

(1) MCU Interface is selected by soldering option as below.
- **8080 interface** (Default setting): R4 is with 0 ohm resistor / R19 is opened.
- **6800 interface** (By request): R19 is with 0 ohm resistor / R4 is opened.
- 8/16/18-bit MCU interface are available.

(2) "Auto Initialisation" takes around half second to complete, customer is suggested to add an one second delay at the beginning of their program.

4. General Specifications

Item	Specification	Unit
LCD mode	Transmissive	---
Resolution	640(RGB)	Line
	480	Line
Diagonal Size	5.7	Inch
Overall Size	164.00	mm
	104.60	mm
Active area	115.20	mm
	86.40	mm
Optimum Viewing Direction	6 o'clock	---
Gray Scale Inversion Direction	12 o'clock	---
Controller IC	Solomon SSD1961	---
Interface type	8080/6800 with 8/16/18 Data Bus Width (1)	---
Colours	262K	---
Operation temperature range	-30~85	°C
Storage temperature range	-30~85	°C

Remarks:

(1) MCU Interface is selected by soldering option as below.
- **8080 interface** (Default setting): R4 is with 0 ohm resistor / R19 is opened.
- **6800 interface** (By request): R19 is with 0 ohm resistor / R4 is opened.
- 8/16/18-bit MCU interface are available.

(2) Color tune may be changed slightly by temperature and driving voltage.
(3) RoHS compliant.

Component Life Cycle

1) Storage Life: min. 1 Year
2) Operation Life (*1): min. 43 x 10^3 h (24hr/day x 7days/week x 52weeks/year x 5years)
   (Not include backlight)
3) Storage and Operation Life Times are defined for a temperature of +25°C

Notes:

*1. Operation life ends when one of the listed faults occurs:
- The on/off response-times reach 1.5 times of the max. value specified for a new display
- The contrast is reduced to 0.5 of the original contrast value
- Loss of function
- The number of cosmetic defects exceeds the maximum defined

5. Mechanical Drawing

- **INT057ATFT**

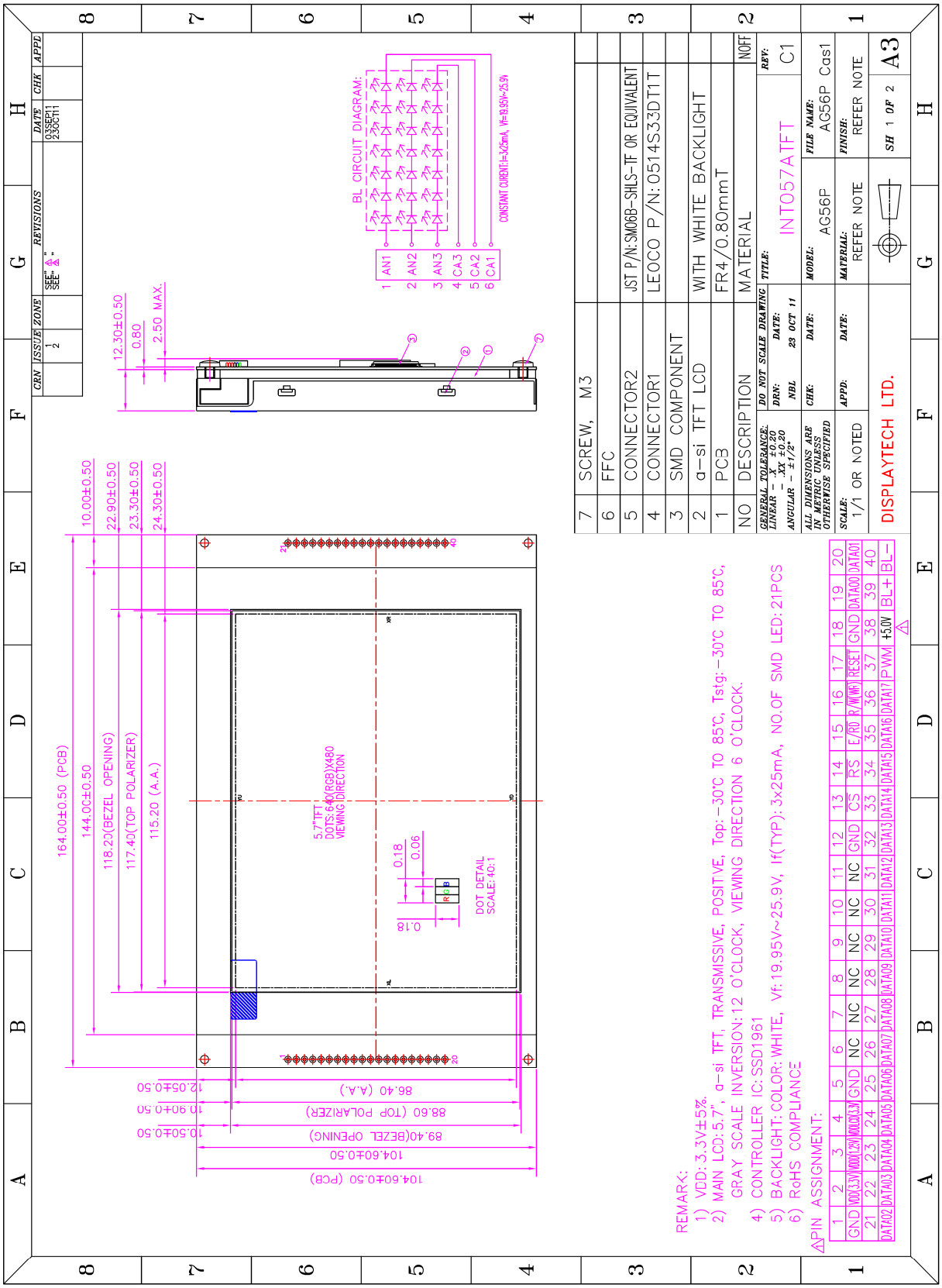

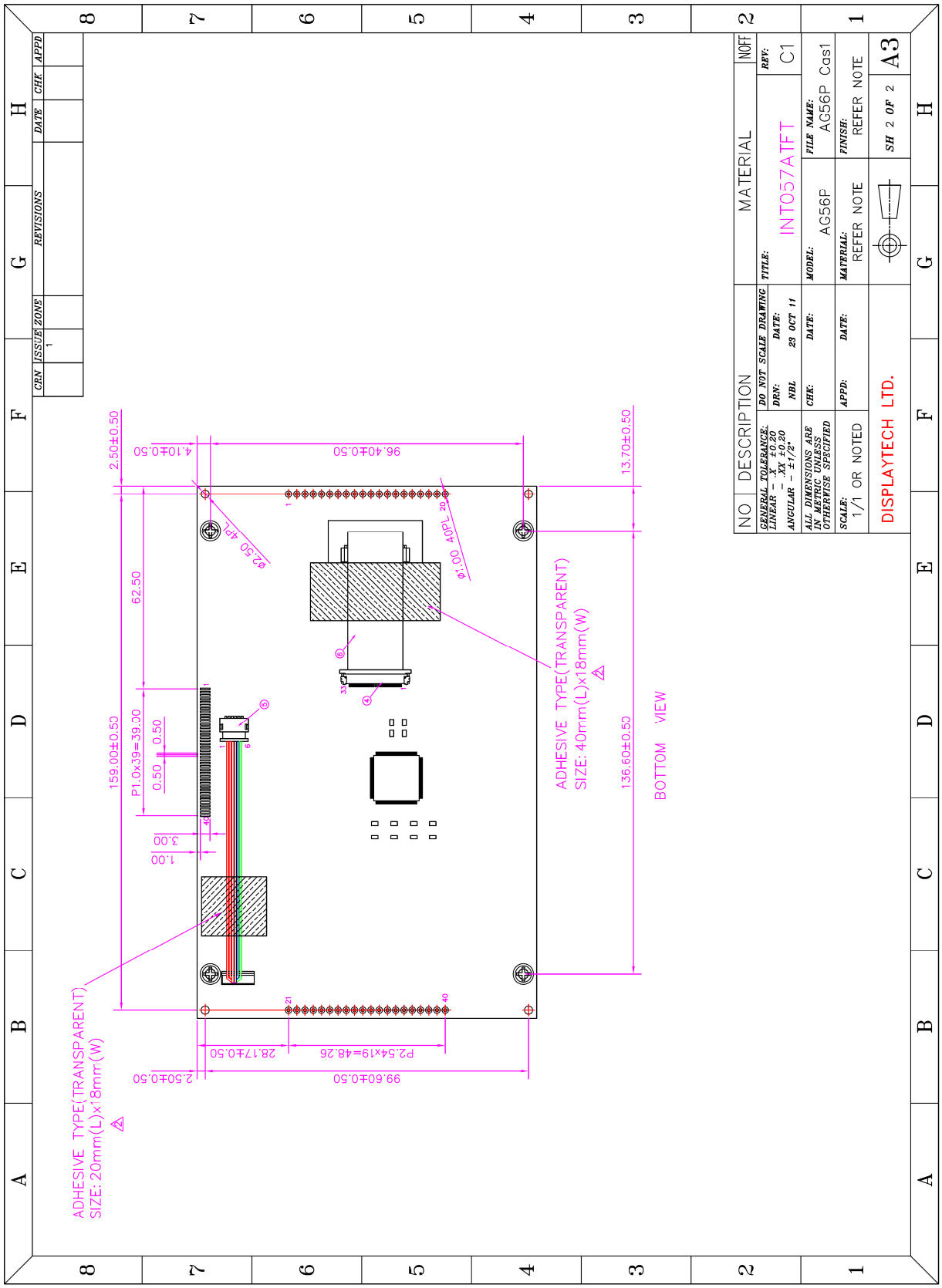
ADHESIVE TYPE(TRANSPARENT)
SIZE: 20mm(L)x18mm(W)
2.50±0.50
4.10±0.50
96.40±0.50
13.70±0.50
62.50
159.00±0.50
P1.0x39=39.00
0.50
0.50
1.00
3.00
φ2.50 4PL
φ1.00 40PL
ADHESIVE TYPE(TRANSPARENT)
SIZE: 40mm(L)x18mm(W)
136.60±0.50
BOTTOM VIEW
2.50±0.50
28.17±0.50
P2.54x19=48.26
99.60±0.50
NO DESCRIPTION
MATERIAL
NOFF
GENERAL TOLERANCE: LINEAR – .X ±0.20 .XX ±0.20 ANGULAR – ±1/2°
DO NOT SCALE DRAWING
DRN: NBL
DATE: 23 OCT 11
TITLE: INT057ATFT
REV: C1
ALL DIMENSIONS ARE IN METRIC UNLESS OTHERWISE SPECIFIED
CHK:
DATE:
MODEL: AG56P
FILE NAME: AG56P Cas1
SCALE: 1/1 OR NOTED
APPD:
DATE:
MATERIAL: REFER NOTE
FINISH: REFER NOTE
DISPLAYTECH LTD.
SH 2 OF 2
A3
REVISIONS
DATE
CHK
APPD
CRN
ISSUE
ZONE
1

6. Interface Description

Pin no	Symbol	I/O	Description
1	GND	---	Power ground 0V
2	VDDIO	---	Power supply for digital I/O pads
3	VDDD	---	Power supply for internal digital circuit
4	VDDLCD	---	Power supply for LCD interface related pads
5	GND	---	Power ground 0V
6	NC	---	No connection
7	NC	---	No connection
8	NC	---	No connection
9	NC	---	No connection
10	NC	---	No connection
11	NC	---	No connection
12	GND	---	Power ground 0V
13	/CS	I	Chip select (for Controller SSD1961)
14	/RS	I	Data/Command select
15	E(/RD)	I	6800 mode: E (enable signal) 8080 mode: /RD (read strobe signal)
16	R/W(/WR)	I	6800 mode: R/W 0: Write cycle 1: Read cycle 8080 mode: /WR (write strobe signal)
17	/RESET	I	Master synchronize reset
18	GND	---	Power ground 0V
19 | 36	DATA00 | DATA17	I/O	Data bus. Pins not used should be floating
37	NC (PWM)	---	No connection
38	+5.0V	I	Power supply for backlight
39	NC (BL+)	---	No connection
40	NC (BL-)	---	No connection

7. Absolute Maximum Ratings

(GND=VSS=0V; Ta=25°C)

Item	Symbol	Min.	Max.	Unit
I/O power supply	VDDIO	-0.5	4.6	V
Digital Core power supply	VDDD	-0.5	1.8	V
LCD Interface power supply	VDDLCD	-0.5	4.6	V
Input Voltage	VIN	-0.5	4.6	V
Output Voltage	VOUT	-0.5	4.6	V
Operating Temperature	TOP	-20	+70	°C
Storage Temperature	TST	-30	+80	°C

Note:

- When temperature is below 0°C, the response time of liquid crystal (LC) will be slower and the color of panel will be darker.
- If module driving condition exceeds the absolute maximum ratings, permanent damaged may be resulted. If module is driven within the absolute maximum ratings but exceeded the DC characteristics, mal-function may be resulted.
- VDD/VCC > VSS

8. Electrical Characteristics

DC Characteristics

(GND=VSS=0V; Ta=25°C)

Item		Symbol	Min.	Typ.	Max.	Unit
I/O power supply		VDDIO	3.135	3.3	3.465	V
Digital Core power supply		VDDD	1.08	1.2	1.32	V
LCD Interface power supply		VDDLCD	1.65	3.3	3.6	V
Input signal voltage	Low level	VIL	---	---	0.2VDDIO	
	High level	VIH	0.8VDDIO	---	VDDIO + 0.5	V
Output signal voltage	Low level	VOL	---	---	0.2VDDIO	V
	High level	VOH	0.8VDDIO	---	---	V
Power supply for backlight (pin#38)			4.75	5.0	5.25	V
Current consumption for backlight (pin#38)			256	320	480	mA

9. Display Controller /Power Supply Timing

See Display Controller Specification: **Solomon SSD1961**

10.Backlight specification

(VDDIO=3.3V, GND=VSS=0V, Ta=25°C)

Item	Symbol	Min	Typ	Max	Unit	Remark
Series 1 Forward current	If1	---	25	---	mA	Note 1
Series 2 Forward current	If2	---	25	---	mA	
Series 3 Forward current	If3	---	25	---	mA	
Forward voltage	VBL	19.95	---	25.9	V	
Backlight power consumption	WBL	---	1732.5	---	mW	

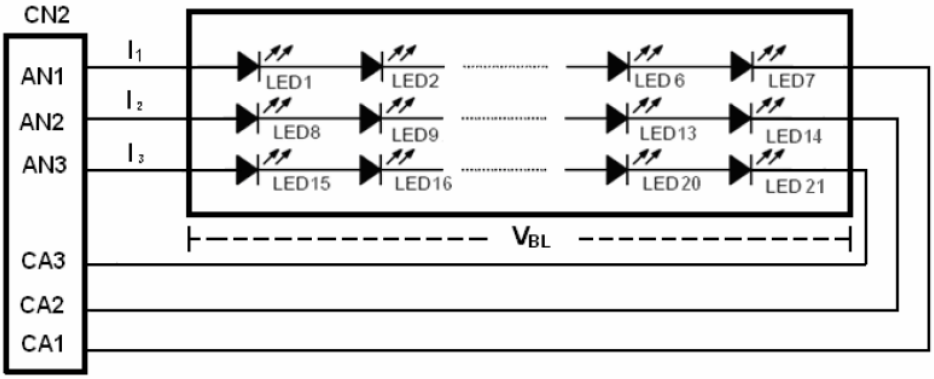

Notes:

1) IF is defined for one channel LED. There are total three LED channels in back light unit
2) Optical performance should be evaluated at Ta=25℃ only.

11.Optical Characteristics

(VDDIO=3.3V, GND=VSS=0V, Ta=25°C)

Item		Symbol	Condition	Min	Typ	Max	Unit	Note
Luminance		L	θ=0º	320	400	---	cd/m²	1, 2
Uniformity		U	Φ=0º	75	80	---	%	1, 2
Viewing Angle		θT	Cr≥10	60	70	---	deg	3
		θB		50	60	---		
		θL		60	70	---		
		θR		60	70	---		
Contrast ratio		Cr	θ=0º	400	500	---	---	1, 4
Response Time		Tr		---	20	30	ms	1, 5
		Tf						
CIE (x,y) Chromaticity	**White**	x	θ=0º	0.252	0.302	0.352	---	1, 6
		y		0.279	0.329	0.379		
	Red	x		0.548	0.598	0.648		
		y		0.292	0.342	0.392		
	Green	x		0.284	0.334	0.384		
		y		0.535	0.585	0.635		
	Blue	x		0.092	0.142	0.192		
		y		0.052	0.102	0.152		
NTSC Ratio		S		---	50	---	%	

Note 1: The data are measured after LEDs are turned on for 5 minutes. LCM displays full white.
The brightness is the average value of 9 measured spots. Measurement equipment PR-705 (Φ8mm)

Measuring condition:
- Measuring surroundings: Dark room.
- Measuring temperature: Ta=25°C.
- Adjust operating voltage to get optimum contrast at the center of the display.

Measured value at the center point of LCD panel after more than 5 minutes while backlight turning on.

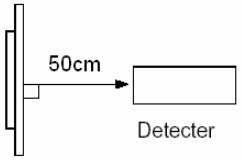

Note 2: The luminance uniformity is calculated by using following formula.
L = L (Min.) / L (Max.)×100 (%)
L (Max.) = Maximum brightness in 9 measured spots
L (Min.) = Minimum brightness in 9 measured spots.

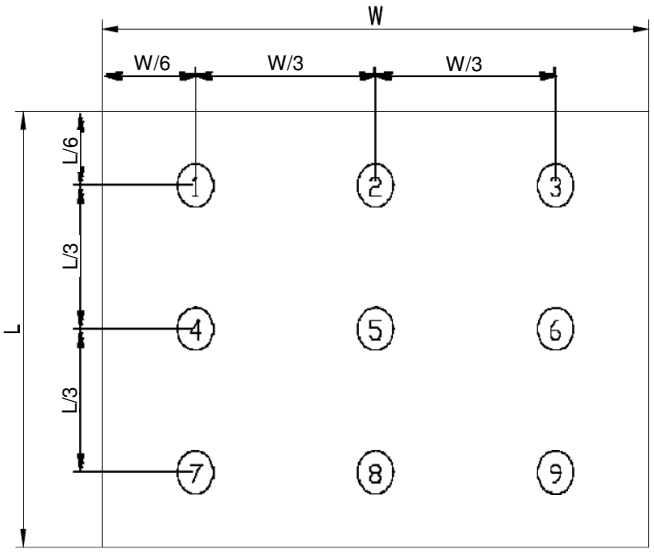

Measurement equipment PR-705 (Φ8mm)

Note 3: The definition of viewing angle:

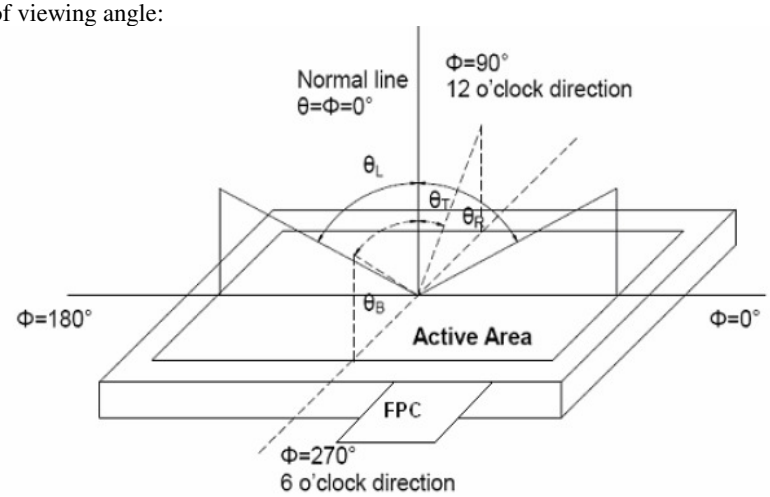

Note 4: The definition of contrast ratio (Test LCM using PR-705):

$$\text{Contrast Ratio (CR)} = \frac{\text{Luminance When LCD is at “White” state}}{\text{Luminance When LCD is at “Black” state}}$$

(Contrast Ratio is measured in optimum common electrode voltage)

Note 5: Definition of Response time. (Test LCD using DMS501):
The output signals of photo detector are measured when the input signals are changed from “black” to “white” (falling time) and from “white” to “black” (rising time), respectively.
The response time is defined as the time interval between the 10% and 90% of amplitudes. Refer to figure as below.

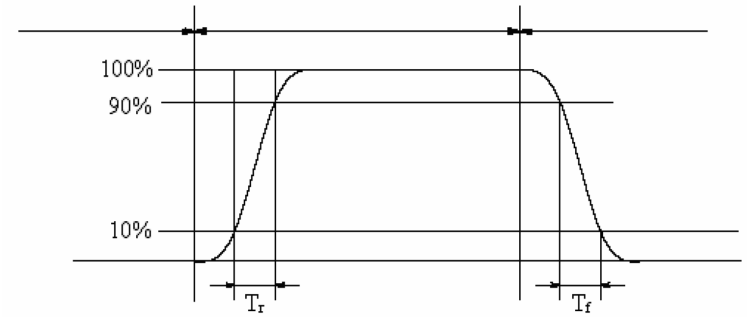

The definition of response time

Note 6: Definition of Color of CIE Coordinate and NTSC Ratio.

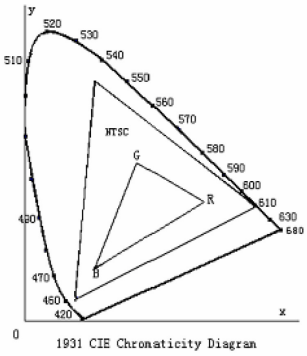

Color gamut:

$$S = \frac{\text{area of RGB triangle}}{\text{area of NTSC triangle}} \times 100\%$$

12. Safety Precaution

Handling precautions:

- This device is susceptible to Electro-Static Discharge (ESD) damage. Observe Anti-Static precautions.

Power supply precautions:

- Identify and, at all times, observe absolute maximum ratings for both logic and LC drivers. Note that there is some variance between models.
- Prevent the application of reverse polarity to VCC and GND, however briefly.
- Use a clean power source free from transients. Power up conditions are occasionally “jolting” and may exceed the maximum ratings of the modules.
- The VCC power of the module should also supply the power to all devices that may access the display. Don’t allow the data bus to be driven when the logic supply to the module is turned off.

Operating precautions:

- DO NOT plug or unplug the module when the system is powered up.
- Minimize the cable length between the module and host MPU.
- Operate the module within the limits of the modules temperature specifications.

Mechanical/Environmental precautions:

- Improper soldering is the major cause of module difficulty. Use of flux cleaner is not recommended as they may seep under the elastomeric connection and cause display failure.
- Mount the module so that it is free from torque and mechanical stress.
- Surface of the LCD panel should not be touched or scratched. The display front surface is an easily scratched, plastic polarizer. Avoid contact and clean only when necessary with soft, absorbent cotton dampened with petroleum benzene.
- Always employ anti-static procedure while handling the module.
- Prevent moisture build-up upon the module and observe the environmental constraints for storage temperature and humidity.
- Do not store in direct sunlight
- If leakage of the liquid crystal material should occur, avoid contact with this material, particularly ingestion. If the body or clothing becomes contaminated by the liquid crystal material, wash thoroughly with water and soap

Компания «ЭлектроПласт» предлагает заключение долгосрочных отношений при поставках импортных электронных компонентов на взаимовыгодных условиях!

Наши преимущества:

- Оперативные поставки широкого спектра электронных компонентов отечественного и импортного производства напрямую от производителей и с крупнейших мировых складов;
- Поставка более 17-ти миллионов наименований электронных компонентов;
- Поставка сложных, дефицитных, либо снятых с производства позиций;
- Оперативные сроки поставки под заказ (от 5 рабочих дней);
- Экспресс доставка в любую точку России;
- Техническая поддержка проекта, помощь в подборе аналогов, поставка прототипов;
- Система менеджмента качества сертифицирована по Международному стандарту ISO 9001;
- Лицензия ФСБ на осуществление работ с использованием сведений, составляющих государственную тайну;
- Поставка специализированных компонентов (Xilinx, Altera, Analog Devices, Intersil, Interpoint, Microsemi, Aeroflex, Peregrine, Syfer, Eurofarad, Texas Instrument, Miteq, Cobham, E2V, MA-COM, Hittite, Mini-Circuits,General Dynamics и др.);

Помимо этого, одним из направлений компании «ЭлектроПласт» является направление «Источники питания». Мы предлагаем Вам помощь Конструкторского отдела:

- Подбор оптимального решения, техническое обоснование при выборе компонента;
- Подбор аналогов;
- Консультации по применению компонента;
- Поставка образцов и прототипов;
- Техническая поддержка проекта;
- Защита от снятия компонента с производства.

Как с нами связаться

Телефон: 8 (812) 309 58 32 (многоканальный)
Факс: 8 (812) 320-02-42
Электронная почта: org@eplast1.ru
Адрес: 198099, г. Санкт-Петербург, ул. Калинина, дом 2, корпус 4, литера А.