3M™ Polarized Wiremount Socket

.100" × .100" 2 row for .100" Pitch Notched Flat Cable or Discrete Wire

CHG Series

- Military/DIN 41612 compatibility
- Two row, polarized body
- Mates to 3M long latch/eject headers and plugs
- 12 standard sizes, 10-64 positions
- Twin slot IDC provides four points of contact
- Exclusive L/H 4-wipe contact
- 3435-0 keying plug is optional - order separately
- Accepts discrete wire or notched ribbon cable
- See the Regulatory Information Appendix (RIA) in the "RoHS compliance" section of www.3Mconnectors.com for compliance information (RIA E1 and C1 Apply)

Date Modified: January 2, 2012

TS-0192-D
Sheet 1 of 2

Physical

Insulation:	
Material:	Glass Filled Polyester (PBT)
Flammability:	UL 94V-0
Color:	Gray
Contact:	
Material:	Copper Alloy
Plating:	
Option P	
First Wipe Area:	30 µ" [0.76 µm] Gold
Second Wipe Area, Underplating and U-Slot	100 µ" [2.54 µm] Nickel
Wire Accommodation:	See Ordering Information for Options
Marking:	3M Logo and Orientation Triangle

Electrical

Current Rating:

	1 Line	4 Adjacent Lines	All Lines
22 AWG	4.5	3.0	1.5
24 AWG	3.75	2.5	1.25
26 AWG	3.5	2.0	1.0
28 AWG	3.5	2.0	1.0

Rating Conditions: EIA-364-070 Method 2, 30°C maximum temperature rise, 20% derated. Reference appropriate 3M Product Specification for detailed current derating curves.

Insulation Resistance: $> 1 \times 10^9$ at 500 V_{DC}

Withstanding Voltage: 500 V_{RMS} at Sea Level

Environmental

Temperature Rating: -55°C to +105°C

UL File No.: E68080

3M is a trademark of 3M Company.

3M™ Polarized Wiremount Socket

.100" × .100" 2 row for .100" Pitch Notched Flat Cable or Discrete Wire

CHG Series

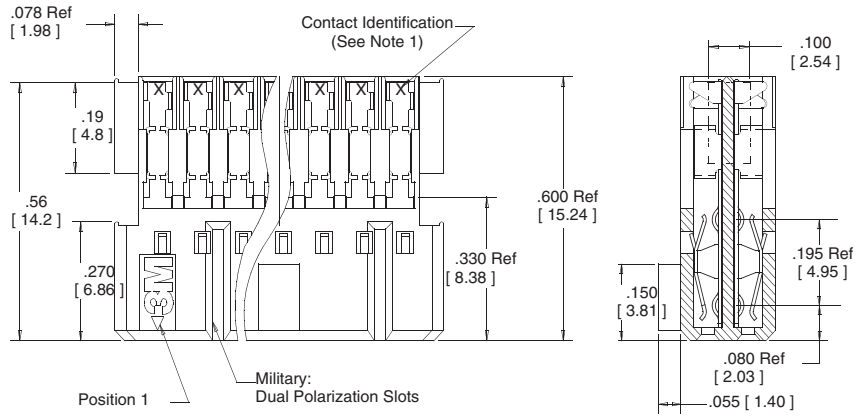

Contact Quantity	Dimension A ± .006 [± 0.15]
10	0.680 [17.27]
14	0.880 [22.35]
16	0.980 [24.89]
20	1.180 [29.97]
24	1.380 [35.05]
26	1.480 [37.59]
30	1.680 [42.68]
34	1.880 [47.75]
40	2.180 [55.37]
50	2.680 [68.07]
60	3.180 [80.77]
64	3.380 [85.85]

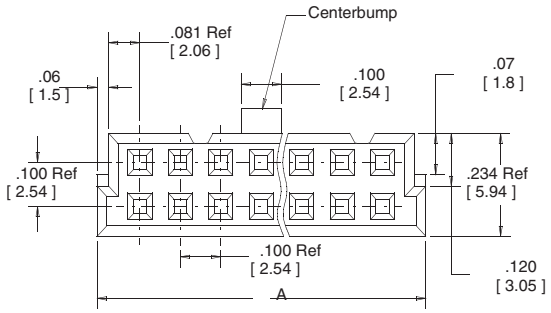

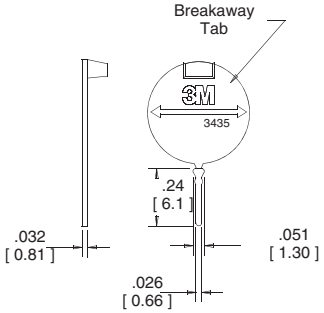

3435-0 Keying Plug

(Optional)

Inch
[mm]

Tolerance Unless Noted			
	.0	.00	.000
Inch	±.1	±.01	±.005

[ ] Dimensions for Reference Only

Notes:
1. Contact Wire size Identification:
   "6" - 26 and 28 AWG
   "2" - 22 and 24 AWG
2. Insulation O.D. = .054 [1.37] Max
3. Recommended to be mated to a .100" x .100" Pin Strip Header with either a .235" [5.97] or a .318" [8.08] mating pin length:
   929 Series, 2400 Series and 2300 Series.
4. Other sizes, polarizations and plating options are available as a special order. Higher minimum quantities and lead times will apply.

Ordering Information

CHG-20XX-X01010-KXX

Contact Quantity
(See Table 1)

Polarization Options:
J = with Centerbump (Standard)
S = without Centerbump (Special Order)

Wire Size Options:
C= 26 and 28 AWG Solid and Stranded
E= 22 AWG Stranded and 24 AWG Solid or Stranded

*Plating Options:
P = Gold (RIA E1 and C1 apply)

Application Tools: For discrete wire: 3586-12 Pistol Grip and 3624-42 Assembly.
For notched flat cable: 3335 Press (or equivalent), 3739-CHGA Locator Plate.

TS-0192-D
Sheet 2 of 2

Important Notice

All statements, technical information, and recommendations related to 3M's products are based on information believed to be reliable, but the accuracy or completeness is not guaranteed. Before using this product, you must evaluate it and determine if it is suitable for your intended application. You assume all risks and liability associated with such use. Any statements related to the product which are not contained in 3M's current publications, or any contrary statements contained on your purchase order shall have no force or effect unless expressly agreed upon, in writing, by an authorized officer of 3M.

Warranty; Limited Remedy; Limited Liability.

This product will be free from defects in material and manufacture for a period of one (1) year from the time of purchase. **3M MAKES NO OTHER WARRANTIES INCLUDING, BUT NOT LIMITED TO, ANY IMPLIED WARRANTY OF MERCHANTABILITY OR FITNESS FOR A PARTICULAR PURPOSE.** If this product is defective within the warranty period stated above, your exclusive remedy shall be, at 3M's option, to replace or repair the 3M product or refund the purchase price of the 3M product. **Except where prohibited by law, 3M will not be liable for any indirect, special, incidental or consequential loss or damage arising from this 3M product, regardless of the legal theory asserted.**

3M Electronics Solutions Division
6801 River Place Blvd.
Austin, TX 78726-9000
U.S.A.
1-800-225-5373
www.3Mconnectors.com

Please recycle. Printed in USA.
© 3M 2012. All rights reserved.
RIA-2217B-E

3M is a trademark of 3M Company.

Компания «ЭлектроПласт» предлагает заключение долгосрочных отношений при поставках импортных электронных компонентов на взаимовыгодных условиях!

Наши преимущества:

- Оперативные поставки широкого спектра электронных компонентов отечественного и импортного производства напрямую от производителей и с крупнейших мировых складов;
- Поставка более 17-ти миллионов наименований электронных компонентов;
- Поставка сложных, дефицитных, либо снятых с производства позиций;
- Оперативные сроки поставки под заказ (от 5 рабочих дней);
- Экспресс доставка в любую точку России;
- Техническая поддержка проекта, помощь в подборе аналогов, поставка прототипов;
- Система менеджмента качества сертифицирована по Международному стандарту ISO 9001;
- Лицензия ФСБ на осуществление работ с использованием сведений, составляющих государственную тайну;
- Поставка специализированных компонентов (Xilinx, Altera, Analog Devices, Intersil, Interpoint, Microsemi, Aeroflex, Peregrine, Syfer, Eurofarad, Texas Instrument, Miteq, Cobham, E2V, MA-COM, Hittite, Mini-Circuits,General Dynamics и др.);

Помимо этого, одним из направлений компании «ЭлектроПласт» является направление «Источники питания». Мы предлагаем Вам помощь Конструкторского отдела:

- Подбор оптимального решения, техническое обоснование при выборе компонента;
- Подбор аналогов;
- Консультации по применению компонента;
- Поставка образцов и прототипов;
- Техническая поддержка проекта;
- Защита от снятия компонента с производства.

Как с нами связаться

Телефон: 8 (812) 309 58 32 (многоканальный)
Факс: 8 (812) 320-02-42
Электронная почта: org@eplast1.ru
Адрес: 198099, г. Санкт-Петербург, ул. Калинина, дом 2, корпус 4, литера А.