AP3105NA/NV/NL/NR

COST EFFECTIVE GREEN PWM CONTROLLER

Description

The AP3105NA/NV/NL/NR is a low startup current, current mode PWM controller with green-mode power-saving operation. The PWM switching frequency at normal operation is set with 65kHz typically and the dithering of frequency will also improve the EMI feature. When the load decreases, the frequency will reduce and when at a very low load, the IC will enter the 'burst mode' to minimize switching loss.

About 20kHz frequency switching is to avoid the audible noise as well as reducing the standby loss. The skip mode point can be adjusted through the external resistor connected to the current sense resistor.

The AP3105NA/NV/NL/NR features a lot of functions such as the Leading-Edge Blanking (LEB) of the current sensing, internal slope compensation and several protection functions including cycle-by-cycle current limit (OCP), VCC Over Voltage Protection (VOVP), OTP and OLP protection. The versatile latch function can be set by the customer through few components.

This IC is available in SOT-23-6 package.

Pin Assignments

K Package
(SOT-23-6)

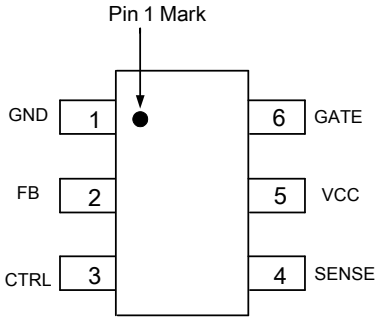

Features

- Very Low Start-up Current
- Current Mode Control
- Non-audible-noise Green-mode Control
- Skip Mode Adjustable
- Internal Slope Compensation
- Soft Start During Startup Process
- Frequency Fold Back for High Average Efficiency
- Secondary Short Winding Protection with FOCP
- Soft Switching for Reducing EMI
- VCC Maintain Mode
- Latch Function for OTP/OVP
- Useful Pin Fault Protection:
  SENSE Pin Floating
  CTRL Pin Short to Ground
  FB/Opto-coupler Open/Short
- Comprehensive System Protection Feature:
  VCC Over Voltage Protection (VOVP)
  Over Load Protection (OLP)
- Mini Size with Packages
- Pin to Pin Compatible with AP3103

Applications

- Switching AC-DC Adapter/Charger
- ATX/BTX Auxiliary Power
- Set-top Box(STB) Power Supply
- Open Frame Switching Power Supply

© Diodes Incorporated

Typical Applications Circuit

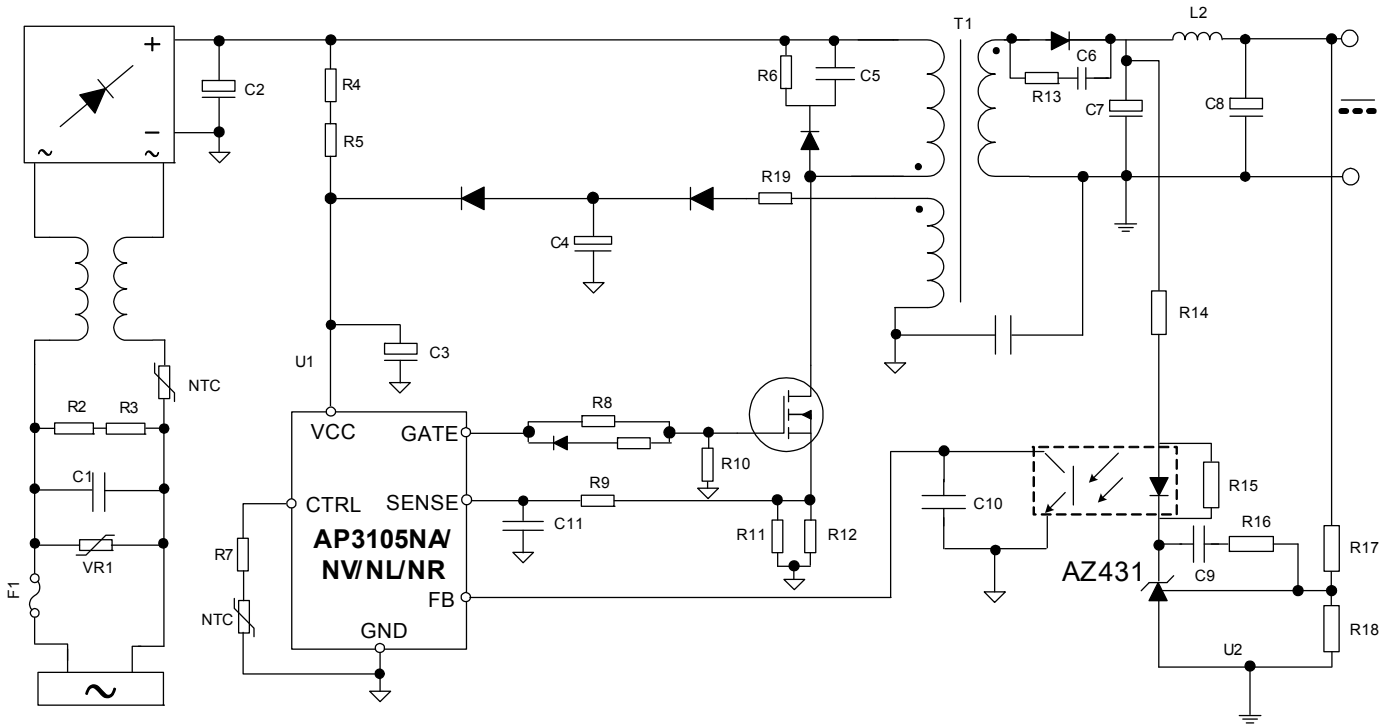

Pin Descriptions

Pin Number	Pin Name	Function
1	GND	Signal ground. Current return for driver and control circuits
2	FB	Feedback. Directly connected to the opto-coupler
3	CTRL	Latch trigger if this pin voltage drops below a threshold or over another threshold, leave CTRL pin open if this function is not needed. Connecting a NTC thermistor to GND can achieve OTP protection
4	SENSE	Current Sense
5	VCC	Supply voltage of driver and control circuits
6	GATE	Gate driver output

© Diodes Incorporated

Functional Block Diagram

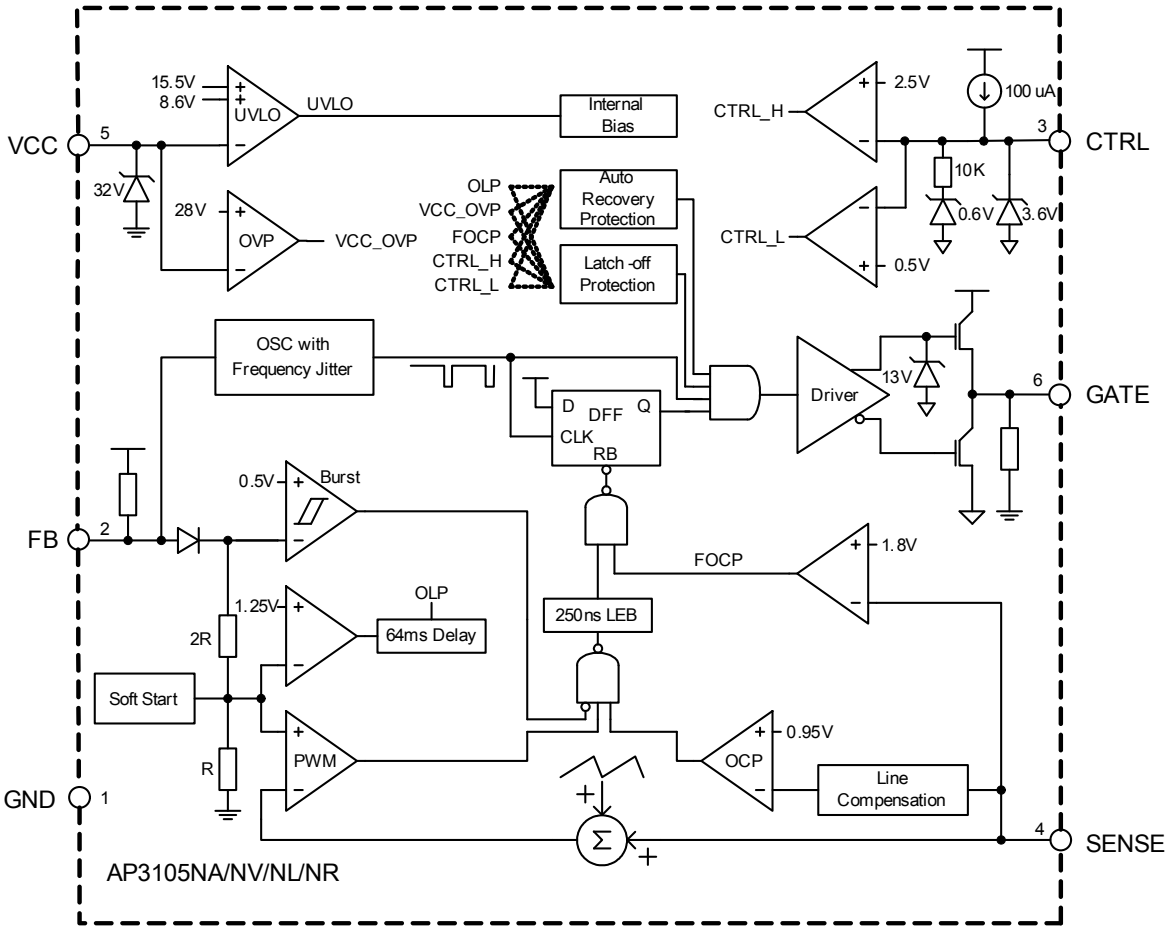

© Diodes Incorporated

Absolute Maximum Ratings (Note 1)

Symbol	Parameter	Rating	Unit
V_{CC}	Power Supply Voltage	30	V
I_O	Gate Output Current	350	mA
V_{FB}, V_{SENSE}, V_{CTRL}	Input Voltage to FB, SENSE, CTRL	-0.3 to 7	V
θ_{JA}	Thermal Resistance (Junction to Ambient)	250	°C/W
P_D	Power Dissipation at T_A < +25°C	500	mW
T_J	Operating Junction Temperature	-40 to +150	°C
T_{STG}	Storage Temperature Range	+150	°C
–	ESD (Human Body Model)	3000	V
–	ESD (Machine Model)	300	V

Note 1: Stresses greater than those listed under “Absolute Maximum Ratings” may cause permanent damage to the device. These are stress ratings only, and functional operation of the device at these or any other conditions beyond those indicated under “Recommended Operating Conditions” is not implied. Exposure to “Absolute Maximum Ratings” for extended periods may affect device reliability.

Recommended Operating Conditions

Symbol	Parameter	Min	Max	Unit
V_{CC}	Supply Voltage	10	25	V

© Diodes Incorporated

Electrical Characteristics (@T_A = +25°C, V_{CC} = 16V, unless otherwise specified.)

Symbol	Parameter	Conditions	Min	Typ	Max	Unit
Supply Voltage (VCC Pin)						
$I_{STARTUP}$	Startup Current	–	2	5	20	μA
I_{CC}	Operating Supply Current	V_{FB}=0V, C_L=1nF	0.5	0.85	1.2	mA
		V_{FB}=3V, C_L=0nF	0.6	1.2	2.0	
–	$U_{VLO\ (on)}$	–	14.5	15.5	16.5	V
–	V_{CC} Maintain	–	9.7	10.2	10.7	V
–	$U_{VLO\ (off)}$	–	7.6	8.6	9.6	V
–	V_{CC} OVP	–	27	28.5	30	V
–	V_{CC} Clamp	I_{CC}=5mA	31	34	–	V
PWM Section/Oscillator Section						
–	Maximum Duty Cycle	–	70	75	80	%
–	Oscillation Frequency	–	60	65	70	kHz
–	Green Mode Frequency	–	20	–	30	kHz
–	Frequency Temperature Stability	-20°C to 125°C (Note 2)	–	–	5	%
–	Frequency Voltage Stability	V_{CC}=12V to 30V	–	–	3	%
–	Frequency Dithering	–	±4	±6	±8	%
Current Sense Section (SENSE Pin)						
V_{CS}	Maximum SENSE Voltage	V_{FB}=3.6V	0.9	0.95	1	V
–	FOCP Voltage	–	1.65	1.8	1.95	V
–	LEB Time of SENSE	–	150	250	350	ns
–	Delay to Output (Note 2)	–	–	100	–	ns
–	Soft-start Time	–	3	5	8	ms
Feedback Input Section (FB Pin)						
–	The Ratio of Input Voltage to Current Sense Voltage	–	2.5	3	3.5	V/V
–	Input Impedance	–	7	10	13	kΩ
–	Source Current	V_{FB}=0V	-0.75	-0.5	-0.25	mA
–	Green Mode Threshold	–	–	2.1	–	V
–	Input Voltage for Zero Duty	–	1.3	1.55	1.8	V
Output Section (GATE Pin)						
–	Output Low Level	I_O=20mA, V_{CC}=12V	–	–	1	V
–	Output High Level	I_O=20mA, V_{CC}=12V	8	–	–	V
–	Output Clamping	–	11	13	15	V
–	Rising Time (Note 2)	C_L=1nF, V_{CC}=13V	–	150	250	ns
–	Falling Time (Note 2)	C_L=1nF, V_{CC}=13V	–	50	100	ns

© Diodes Incorporated

Electrical Characteristics (Cont.) (@T_A = +25°C, V_{CC} = 16V, unless otherwise specified.)

Protection Section (CTRL Pin)						
–	Source Current	–	90	100	110	μA
–	Internal Reference Voltage	–	–	1.5	–	V
–	Low Threshold Trigger for Latch	–	0.47	0.5	0.53	V
–	High Threshold Trigger for Latch	–	2.35	2.5	2.65	V
–	Pull-up Current (Note 3)	–	–	–	2	mA
Delay Time Section						
–	Delay of Short Circuit Protection	–	54	64	74	ms
–	Delay of Hiccup Protection	VCC OVP	–	25	–	μs

Note 2: Guaranteed by design.

Note 3: The sourcing current of CTRL pin must be limited below 5mA.Otherwise it may cause permanent damage to the device.

© Diodes Incorporated

Performance Characteristics

Startup Voltage vs. Ambient Temperature

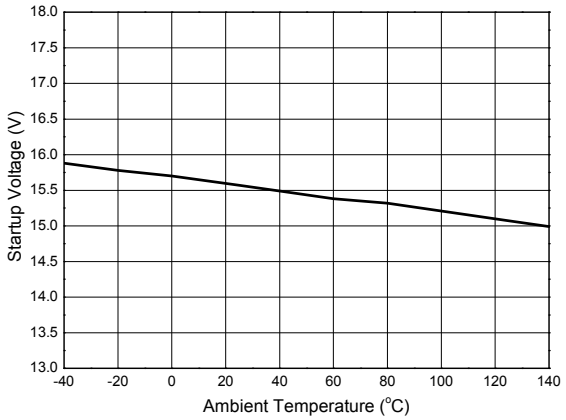

Shutdown Voltage vs. Ambient Temperature

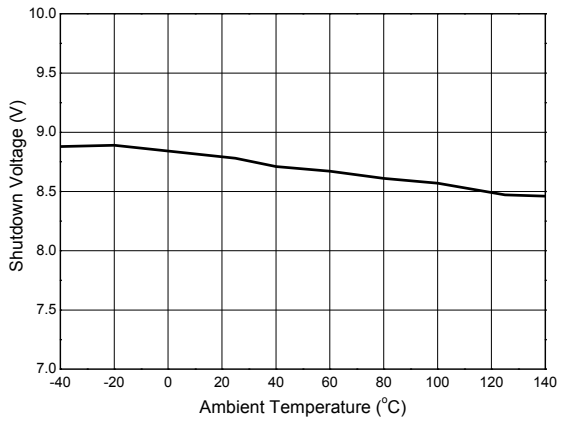

Startup Current vs. Ambient Temperature

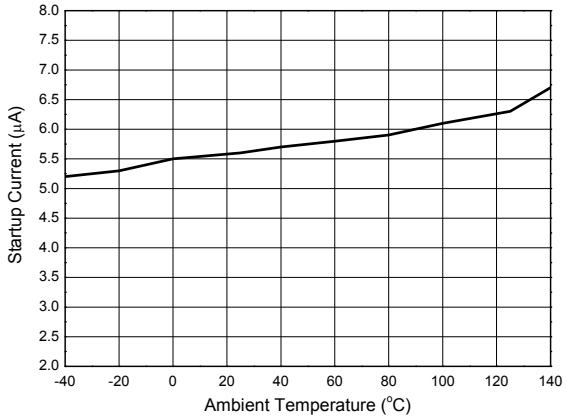

Operating Current vs. Ambient Temperature

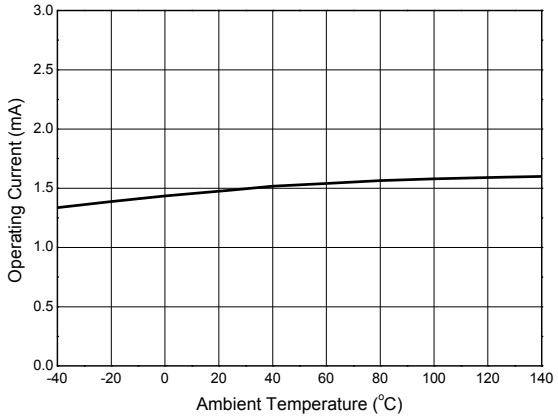

CTRL Utilization for Latch

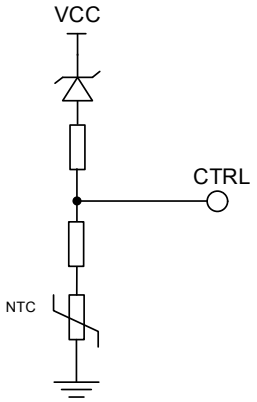

OVP and OTP

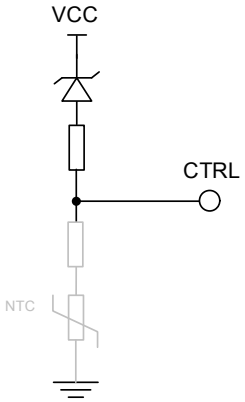

OVP

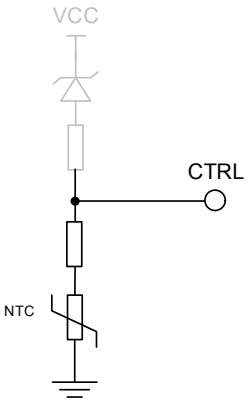

OTP

© Diodes Incorporated

Operation Description

The AP3105NA/NV/NL/NR is specifically designed for off-line AC-DC power supply used in LCD monitor, notebook adapter and battery charger applications. It offers a cost effective solution with a versatile protection function.

Start-up Current and UVLO

The start-up current of AP3105NA/NV/NL/NR is optimized to realize ultra low current (5μA typical) so that VCC capacitor can be charged more quickly. The direct benefit of low start-up current is the availability of using large start-up resistor, which minimizes the resistor power loss for high voltage AC input.

An UVLO comparator is included in AP3105NA/NV/NL/NR to detect the voltage on VCC pin. It ensures that AP3105NA/NV/NL/NR can draw adequate energy from hold-up capacitor during power-on. The turn-on threshold is 15.5V and the turn-off threshold is 8.6V.

Current Sense Comparator and PWM Latch

The AP3105NA/NV/NL/NR operates as a current mode controller, the output switch conduction is initiated by every oscillator cycle and is terminated when the peak inductor current reaches the threshold level established by the FB pin. The inductor current signal is converted to a voltage signal by inserting a reference sense resistor R_S. The inductor current under normal operating conditions is controlled by the voltage at FB pin. The relation between peak inductor current (I_{PK}) and V_{FB} is:

$$I_{PK} = (V_{FB} - 0.8)/3R_S$$

Moreover, FOCP with 1.8V threshold is only about 100ns delay, which can avoid some catastrophic damages such as secondary rectifier short test. Few drive cycles can alleviate the destruction range and get better protection.

Leading-edge Blanking

A narrow spike on the leading edge of the current waveform can usually be observed when the power MOSFET is turned on. A 250ns leading-edge blank is built-in to prevent the false-triggering caused by the turn-on spike. During this period, the current limit comparator is disabled and the gate driver can not be switched off.

At the time of turning on the MOSFET, a negative undershoot (maybe larger than -0.3V) can occur on the SENSE pin. So it is strongly recommended to add a small RC filter or at least connect a resistor "R" on this pin to protect the IC (Shown as Figure 1).

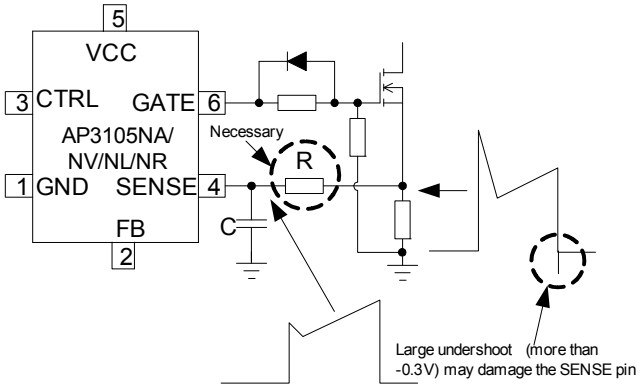

Figure 1

Built-in Slope Compensation

It is well known that a continuous current mode SMPS may become unstable when the duty cycle exceeds 50%. The built-in slope compensation can improve the stability, so there is no need for design engineer to spend much time on that.

FB Pin and Short Circuit Protection

This pin is normally connected to the opto-coupler and always paralleled with a capacitor for loop compensation. When the voltage at this pin is greater than 4.2V and lasts for about 64ms, the IC will enter the protection mode. For AP3105NA/NV/NR, the system will enter hiccup mode to wait the V_{CC} decreasing to low UVLO level, then the IC will try to restart until the failure removed. And when this voltage is less than 1.55V, the IC will stop the drive pulse immediately. Therefore, this feature can be used for short circuit protection, which makes the system immune from damage. Normally, output short makes the V_{FB} value to the maximum because the opto-coupler is cut off.

V_{CC} Maintain Mode

During light load or step load, V_{FB} will drop and be lower than 1.55V, thus the PWM drive signal will be stopped, and there is no more new energy transferred due to no switching. Therefore, the IC supply voltage may reduce to the shutdown threshold voltage and system may enter the unexpected restart mode. To avoid this, the AP3105NA/NV/NL/NR hold a so-called V_{CC} maintain mode which can supply energy to VCC.

When V_{CC} decreases to a setting threshold, the V_{CC} maintain comparator will output some drive signal to make the system switch and provide a proper energy to VCC pin. The V_{CC} maintain function will cooperate the PWM and burst mode loop which can make the output voltage variation be within the regulation. This mode is very useful for reducing startup resistor loss and achieving a better standby performance with a low value VCC capacitor. The V_{CC} is not easy to touch the shutdown threshold during the startup process and step load. This will also simplify the system design. The normal VCC voltage is suggested to be designed a little higher than V_{CC} maintain threshold thus can achieve the best balance between the standby and step load performance.

© Diodes Incorporated

Operation Description (Cont.)

System Protection and Pin Fault Protection

The AP3105NA/NV/NL/NR provides versatile system and pin fault protections. The OCP comparator realizes the cycle-by-cycle current limiting (OCP). In universal input line voltage, the IC realizes the constant over load protection (OLP). VCC over voltage protection can be applied as the primary OVP or opto-coupler broken protection. The AP3105NA/NV/NL/NR also has pin fault connection protection including floating and short connection. The floating pin protection include the SENSE, FB, etc.. The short pin protection includes the CTRL pin short protection. When these pins are floated or CTRL pin is shorted to ground, PWM switching will be disabled, thus protecting the power system.

Latch Protection Function

For some applications, the system requires the latch protection function. The CTRL pin has two kinds of modes to trigger the latch protection: high level trigger and low level trigger. The low threshold is 0.5V and high threshold voltage is 2.5V. Some version will have only one mode. Once the latch protection is triggered, the IC will disable the output signal, and the bulk capacitor provides the energy to IC through the startup resistor to ensure the IC disable the output (latch mode). This mode will be not released until the AC input is shut off. So, the de-latch time is mainly depending on the HV startup bulk capacitor value. Therefore, if the system wants a short de-latch time, it is better for the startup resistor take power from the point before the rectifier bridge as illustrated in Figure 2.

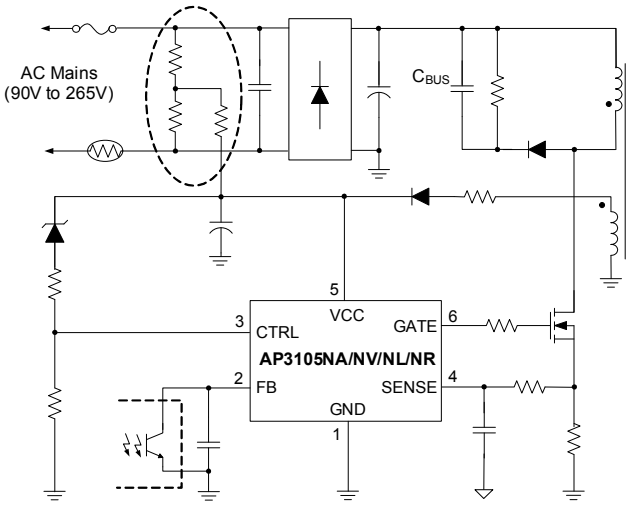

Figure 2

© Diodes Incorporated

Ordering Information

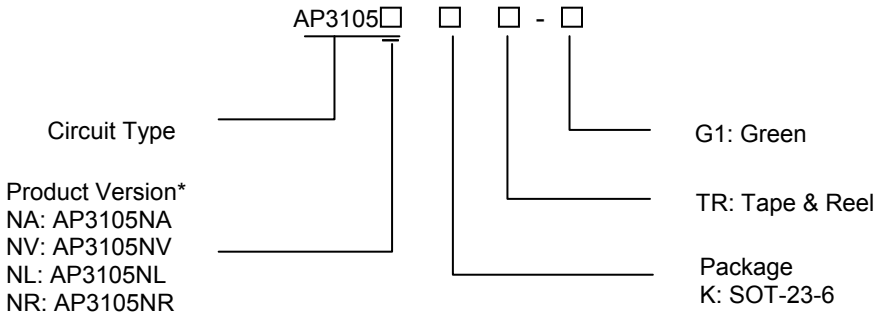

Package	Part Number	Marking ID	Packing Type
SOT-23-6	AP3105NAKTR-G1	GKN	Tape & Reel
	AP3105NVKTR-G1	GKO	Tape & Reel
	AP3105NLKTR-G1	GKP	Tape & Reel
	AP3105NRKTR-G1	GKQ	Tape & Reel

BCD Semiconductor's products, as designated with "G1" suffix in the part number, are RoHS compliant and green.

*Product Version Classification (with Different Protection Functions)

Product Version	Frequency	VOVP	OLP&SOCP	CTRL (Low)	CTRL (High)
AP3105NA	65kHz	Auto-Recoverable	Auto-Recoverable	Latch	Auto-Recoverable
AP3105NV	65kHz	Latch	Auto-Recoverable	Latch	Latch
AP3105NL	65kHz	Latch	Latch	Latch	Latch
AP3105NR	65kHz	Auto-Recoverable	Auto-Recoverable	Auto-Recoverable	Latch

© Diodes Incorporated

Package Outline Dimensions (All dimensions in mm(inch).)

SOT-23-6

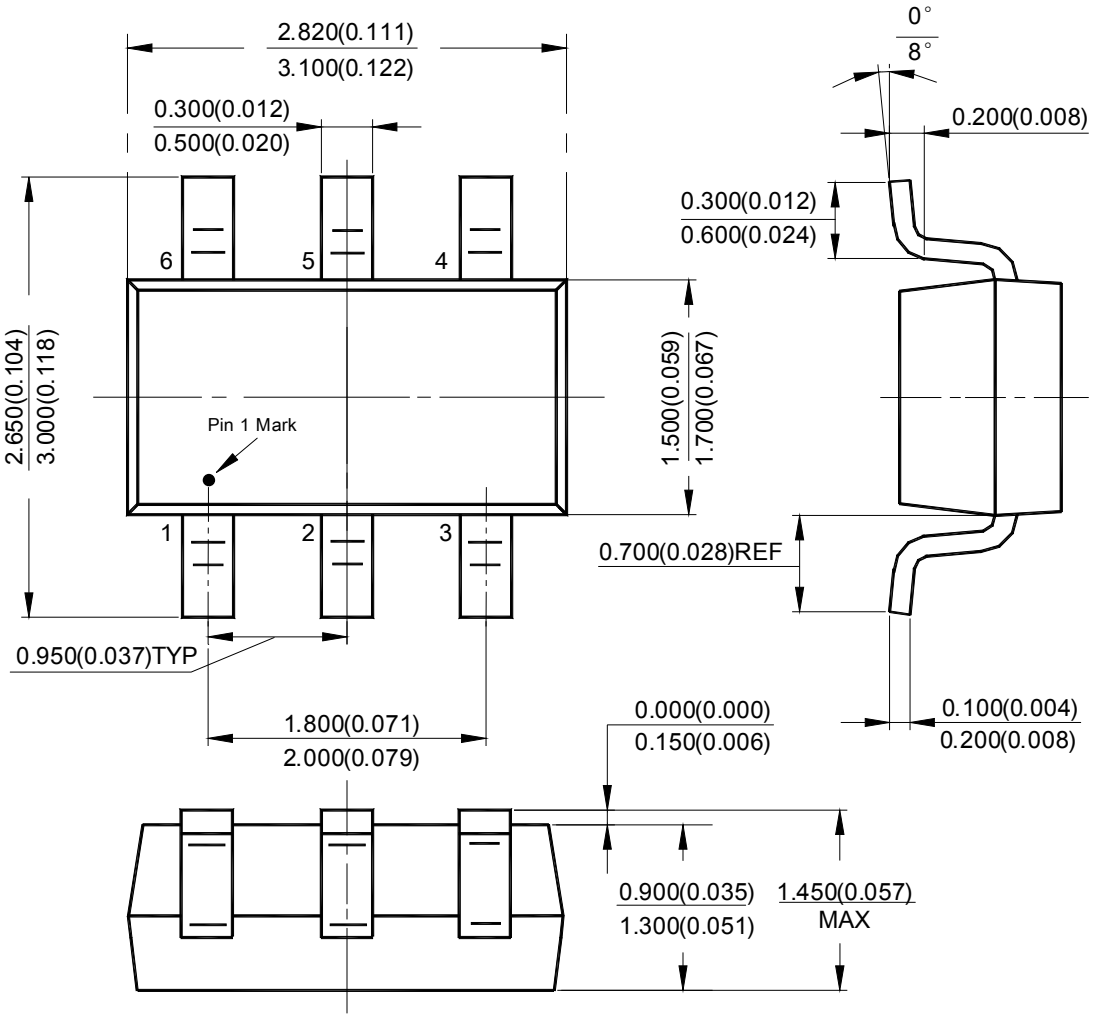

© Diodes Incorporated

Suggested Pad Layout

SOT-23-6

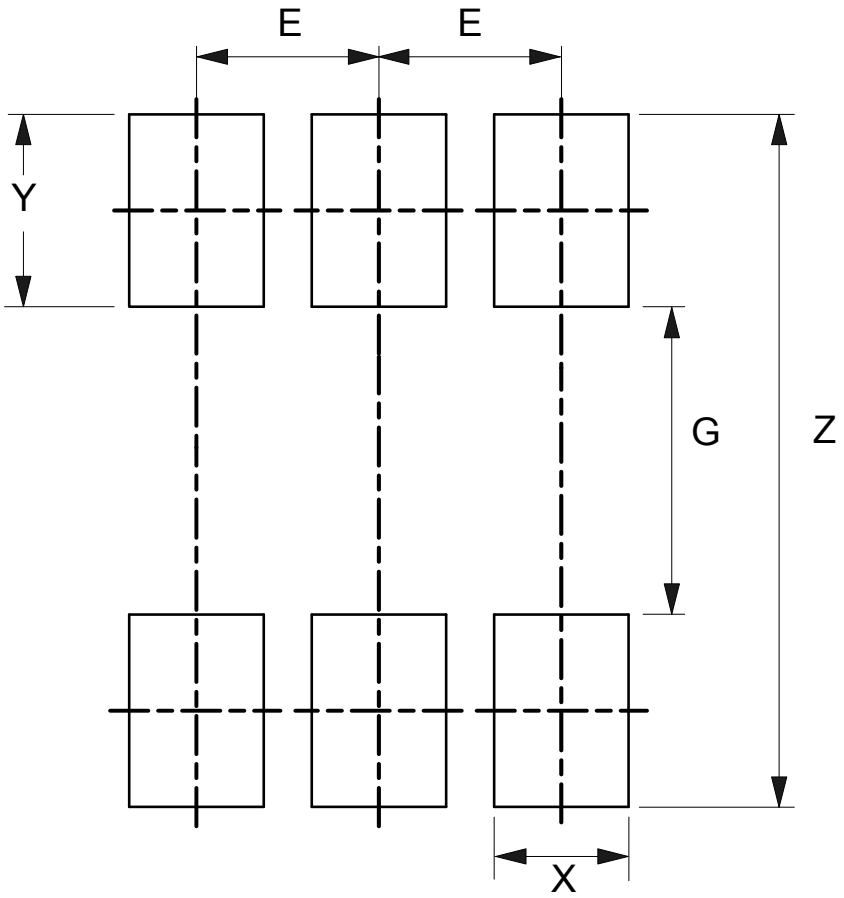

Dimensions	Z (mm)/(inch)	G (mm)/(inch)	X (mm)/(inch)	Y (mm)/(inch)	E (mm)/(inch)
Value	3.600/0.142	1.600/0.063	0.700/0.028	1.000/0.039	0.950/0.037

© Diodes Incorporated

IMPORTANT NOTICE

DIODES INCORPORATED MAKES NO WARRANTY OF ANY KIND, EXPRESS OR IMPLIED, WITH REGARDS TO THIS DOCUMENT, INCLUDING, BUT NOT LIMITED TO, THE IMPLIED WARRANTIES OF MERCHANTABILITY AND FITNESS FOR A PARTICULAR PURPOSE (AND THEIR EQUIVALENTS UNDER THE LAWS OF ANY JURISDICTION).

Diodes Incorporated and its subsidiaries reserve the right to make modifications, enhancements, improvements, corrections or other changes without further notice to this document and any product described herein. Diodes Incorporated does not assume any liability arising out of the application or use of this document or any product described herein; neither does Diodes Incorporated convey any license under its patent or trademark rights, nor the rights of others. Any Customer or user of this document or products described herein in such applications shall assume all risks of such use and will agree to hold Diodes Incorporated and all the companies whose products are represented on Diodes Incorporated website, harmless against all damages.

Diodes Incorporated does not warrant or accept any liability whatsoever in respect of any products purchased through unauthorized sales channel. Should Customers purchase or use Diodes Incorporated products for any unintended or unauthorized application, Customers shall indemnify and hold Diodes Incorporated and its representatives harmless against all claims, damages, expenses, and attorney fees arising out of, directly or indirectly, any claim of personal injury or death associated with such unintended or unauthorized application.

Products described herein may be covered by one or more United States, international or foreign patents pending. Product names and markings noted herein may also be covered by one or more United States, international or foreign trademarks.

This document is written in English but may be translated into multiple languages for reference. Only the English version of this document is the final and determinative format released by Diodes Incorporated.

LIFE SUPPORT

Diodes Incorporated products are specifically not authorized for use as critical components in life support devices or systems without the express written approval of the Chief Executive Officer of Diodes Incorporated. As used herein:

A. Life support devices or systems are devices or systems which:

1. are intended to implant into the body, or
2. support or sustain life and whose failure to perform when properly used in accordance with instructions for use provided in the labeling can be reasonably expected to result in significant injury to the user.

B. A critical component is any component in a life support device or system whose failure to perform can be reasonably expected to cause the failure of the life support device or to affect its safety or effectiveness.

Customers represent that they have all necessary expertise in the safety and regulatory ramifications of their life support devices or systems, and acknowledge and agree that they are solely responsible for all legal, regulatory and safety-related requirements concerning their products and any use of Diodes Incorporated products in such safety-critical, life support devices or systems, notwithstanding any devices- or systems-related information or support that may be provided by Diodes Incorporated. Further, Customers must fully indemnify Diodes Incorporated and its representatives against any damages arising out of the use of Diodes Incorporated products in such safety-critical, life support devices or systems.

Copyright © 2013, Diodes Incorporated

www.diodes.com

Компания «ЭлектроПласт» предлагает заключение долгосрочных отношений при поставках импортных электронных компонентов на взаимовыгодных условиях!

Наши преимущества:

- Оперативные поставки широкого спектра электронных компонентов отечественного и импортного производства напрямую от производителей и с крупнейших мировых складов;
- Поставка более 17-ти миллионов наименований электронных компонентов;
- Поставка сложных, дефицитных, либо снятых с производства позиций;
- Оперативные сроки поставки под заказ (от 5 рабочих дней);
- Экспресс доставка в любую точку России;
- Техническая поддержка проекта, помощь в подборе аналогов, поставка прототипов;
- Система менеджмента качества сертифицирована по Международному стандарту ISO 9001;
- Лицензия ФСБ на осуществление работ с использованием сведений, составляющих государственную тайну;
- Поставка специализированных компонентов (Xilinx, Altera, Analog Devices, Intersil, Interpoint, Microsemi, Aeroflex, Peregrine, Syfer, Eurofarad, Texas Instrument, Miteq, Cobham, E2V, MA-COM, Hittite, Mini-Circuits,General Dynamics и др.);

Помимо этого, одним из направлений компании «ЭлектроПласт» является направление «Источники питания». Мы предлагаем Вам помощь Конструкторского отдела:

- Подбор оптимального решения, техническое обоснование при выборе компонента;
- Подбор аналогов;
- Консультации по применению компонента;
- Поставка образцов и прототипов;
- Техническая поддержка проекта;
- Защита от снятия компонента с производства.

Как с нами связаться

Телефон: 8 (812) 309 58 32 (многоканальный)
Факс: 8 (812) 320-02-42
Электронная почта: org@eplast1.ru
Адрес: 198099, г. Санкт-Петербург, ул. Калинина, дом 2, корпус 4, литера А.