Data Sheet

HLMP-ELxx, HLMP-EHxx, HLMP-EJxx, HLMP-EGxx

T-1¾ (5 mm) Precision Optical Performance AlInGaP LED Lamps

Description

These Precision Optical Performance AlInGaP LEDs provide superior light output for excellent readability in sunlight and are extremely reliable. AlInGaP LED technology provides extremely stable light output over long periods of time. Precision Optical Performance lamps use the aluminum indium gallium phosphide (AlInGaP) technology.

These LED lamps are untinted, nondiffused, T-1¾ packages incorporating second-generation optics producing well defined spatial radiation patterns at specific viewing cone angles.

These lamps are made with an advanced optical grade epoxy, offering superior high temperature and high moisture resistance performance in outdoor signal and sign applications. The high maximum LED junction temperature limit of +130 °C enables high temperature operation in bright sunlight conditions. The package epoxy contains both uv-a and uv-b inhibitors to reduce the effects of long-term exposure to direct sunlight.

These lamps are available in two package options to give the designer flexibility with device mounting.

Benefits

- Viewing angles match traffic management sign requirements
- Colors meet automotive and pedestrian signal specifications
- Superior performance in outdoor environments
- Suitable for autoinsertion onto PC boards

Features

- Well-defined spatial radiation patterns
- Viewing angles: 8°, 15°, 23°, 30°
- High luminous output
- Colors:
  - 590 nm amber
  - 605 nm orange
  - 615 nm reddish-orange
  - 626 nm red
- High operating temperature: T_JLED = +130°C
- Superior resistance to moisture
- Package options:
  - With or without lead stand-offs

Applications

- Traffic management:
  - Traffic signals
  - Pedestrian signals
  - Work zone warning lights
  - Variable message signs
- Commercial outdoor advertising:
  - Signs
  - Marquees
- Automotive:
  - Exterior and interior lights

Device Selection Guide

Table 1: Device Selection Guide, 8° Typical Viewing Angle

Typical Viewing Angle 2θ½ (Deg)[a]	Color and Dominant Wavelength (nm), Typ.[b]	Lamps without Standoffs on Leads (Outline Drawing A)	Lamps with Standoffs on Leads (Outline Drawing B)	Luminous Intensity Iv (mcd)[c,d,e] at 20 mA	
				Min.	Max.
8°	Amber 590	HLMP-EL08-T0000	—	2500	—
		HLMP-EL08-VY000	HLMP-EL10-VY000	4200	12000
		HLMP-EL08-WZ000	—	5500	16000
		HLMP-EL08-X1K00	HLMP-EL10-X1K00	7200	21000
		HLMP-EL08-X1000	HLMP-EL10-X1000	7200	21000
	Orange 605	HLMP-EJ08-WZ000	—	5500	16000
		HLMP-EJ08-X1000	—	7200	21000
		HLMP-EJ08-Y2000	—	9300	27000
	Red-Orange 615	HLMP-EH08-UX000	—	3200	9300
		HLMP-EH08-WZ000	HLMP-EH10-WZ000	5500	16000
		HLMP-EH08-Y2000	HLMP-EH10-Y2000	9300	27000
	Red 626	HLMP-EG08-T0000	—	2500	—
		HLMP-EG08-VY000	—	4200	12000
		HLMP-EG08-WZ000	HLMP-EG10-WZ000	5500	16000
		HLMP-EG08-X1000	HLMP-EG10-X1000	7200	21000
		HLMP-EG08-YZ000	—	9300	16000
		HLMP-EG08-Y2000	HLMP-EG10-Y2000	9300	27000

a. θ½ is the off-axis angle where the luminous intensity is half the on-axis intensity.

b. The dominant wavelength, λ_d, is derived from the CIE Chromaticity Diagram and represents the color of the lamp.

c. The luminous intensity is measured on the mechanical axis of the lamp package.

d. The optical axis is closely aligned with the package mechanical axis.

e. Tolerance for each intensity bin limit is ±15%.

Table 2: Device Selection Guide, 15° Typical Viewing Angle

Typical Viewing Angle 2θ½ (Deg)[a]	Color and Dominant Wavelength (nm), Typ[b]	Lamps without Standoffs on Leads (Outline Drawing A)	Lamps with Standoffs on Leads (Outline Drawing B)	Luminous Intensity Iv (mcd)[c,d,e] at 20 mA	
				Min.	Max.
15°	Amber 590	HLMP-EL15-PS000	—	880	2500
		HLMP-EL15-QT000	—	1150	3200
		HLMP-EL15-UX000	—	3200	9300
		HLMP-EL15-VY000	HLMP-EL17-VY000	4200	12000
		HLMP-EL15-VYK00	—	4200	12000
	Orange 605	HLMP-EJ15-PS000	—	880	2500
		HLMP-EJ15-SV000	HLMP-EJ17-SV000	1900	5500
	Red-Orange 615	HLMP-EH15-RU000	—	1500	4200
		HLMP-EH15-TW000	—	2500	7200
	Red 626	HLMP-EG15-PS000	—	880	2500
		HLMP-EG15-QT000	—	1150	3200
		HLMP-EG15-RU000	—	1500	4200
		HLMP-EG15-UX000	HLMP-EG17-UX000	3200	9300
		HLMP-EG15-TW000	—	2500	7200

a. θ½ is the off-axis angle where the luminous intensity is half the on-axis intensity.

b. The dominant wavelength, λ_d, is derived from the CIE Chromaticity Diagram and represents the color of the lamp.

c. The luminous intensity is measured on the mechanical axis of the lamp package.

d. The optical axis is closely aligned with the package mechanical axis.

e. Tolerance for each intensity bin limit is ±15%.

Table 3: Device Selection Guide, 23° Typical Viewing Angle

Typical Viewing Angle 2θ½ (Deg)[a]	Color and Dominant Wavelength (nm), Typ[b]	Lamps without Standoffs on Leads (Outline Drawing A)	Lamps with Standoffs on Leads (Outline Drawing B)	Luminous Intensity Iv (mcd)[c,d,e] at 20 mA	
				Min.	Max.
23°	Amber 590	HLMP-EL24-PS000	HLMP-EL26-PS000	880	2500
		HLMP-EL24-QT000	HLMP-EL26-QT000	1150	3200
		HLMP-EL24-SU400	—	1900	4200
		HLMP-EL24-TW000	—	2500	7200
	Orange 605	HLMP-EJ24-QT000	—	1150	3200
	Red-Orange 615	HLMP-EH24-PS000	HLMP-EH26-PS000	880	2500
		HLMP-EH24-QT000	—	1150	3200
	Red 626	HLMP-EG24-PS000	HLMP-EG26-PS000	880	2500
		HLMP-EG24-QT000	—	1150	4200
		HLMP-EG24-RU000	—	1500	4200

a. θ½ is the off-axis angle where the luminous intensity is half the on-axis intensity.

b. The dominant wavelength, λ_d, is derived from the CIE Chromaticity Diagram and represents the color of the lamp.

c. The luminous intensity is measured on the mechanical axis of the lamp package.

d. The optical axis is closely aligned with the package mechanical axis.

e. Tolerance for each intensity bin limit is ±15%.

Table 4: Device Selection Guide, 30° Typical Viewing Angle

Typical Viewing Angle 2θ½ (Deg)[a]	Color and Dominant Wavelength (nm), Typ[b]	Lamps without Standoffs on Leads (Outline Drawing A)	Lamps with Standoffs on Leads (Outline Drawing B)	Luminous Intensity Iv (mcd)[c,d,e] at 20 mA	
				Min.	Max.
30°	Amber 590	HLMP-EL30-MQ000	—	520	1500
		HLMP-EL30-PQ000	—	880	1500
		HLMP-EL30-PR400	—	880	1900
		HLMP-EL30-PS000	HLMP-EL32-PS000	880	2500
		HLMP-EL30-PSK00	—	880	2500
		HLMP-EL30-QT000	—	1150	3200
		HLMP-EL30-STK00	—	1900	3200
		HLMP-EL30-SV000	—	1900	5500
	Orange 605	HLMP-EJ30-NR000	—	680	1900
		HLMP-EJ30-PS000	HLMP-EJ32-PS000	880	2500
	Red-Orange 615	HLMP-EH30-MQ000	—	520	1500
		HLMP-EH30-PS000	—	880	2500
	Red 626	HLMP-EG30-KN000	—	310	880
		HLMP-EG30-MQ000	—	520	1500
		HLMP-EG30-NQ000	—	680	1500
		HLMP-EG30-NR000	HLMP-EG32-NR000	680	1900
		HLMP-EG30-PR000	—	880	1900
		HLMP-EG30-PS000	—	880	2500
		HLMP-EG30-QT000	—	1150	3200

a. θ½ is the off-axis angle where the luminous intensity is half the on-axis intensity.

b. The dominant wavelength, λ_d, is derived from the CIE Chromaticity Diagram and represents the color of the lamp.

c. The luminous intensity is measured on the mechanical axis of the lamp package.

d. The optical axis is closely aligned with the package mechanical axis.

e. Tolerance for each intensity bin limit is ±15%.

Figure 1: Package Dimensions

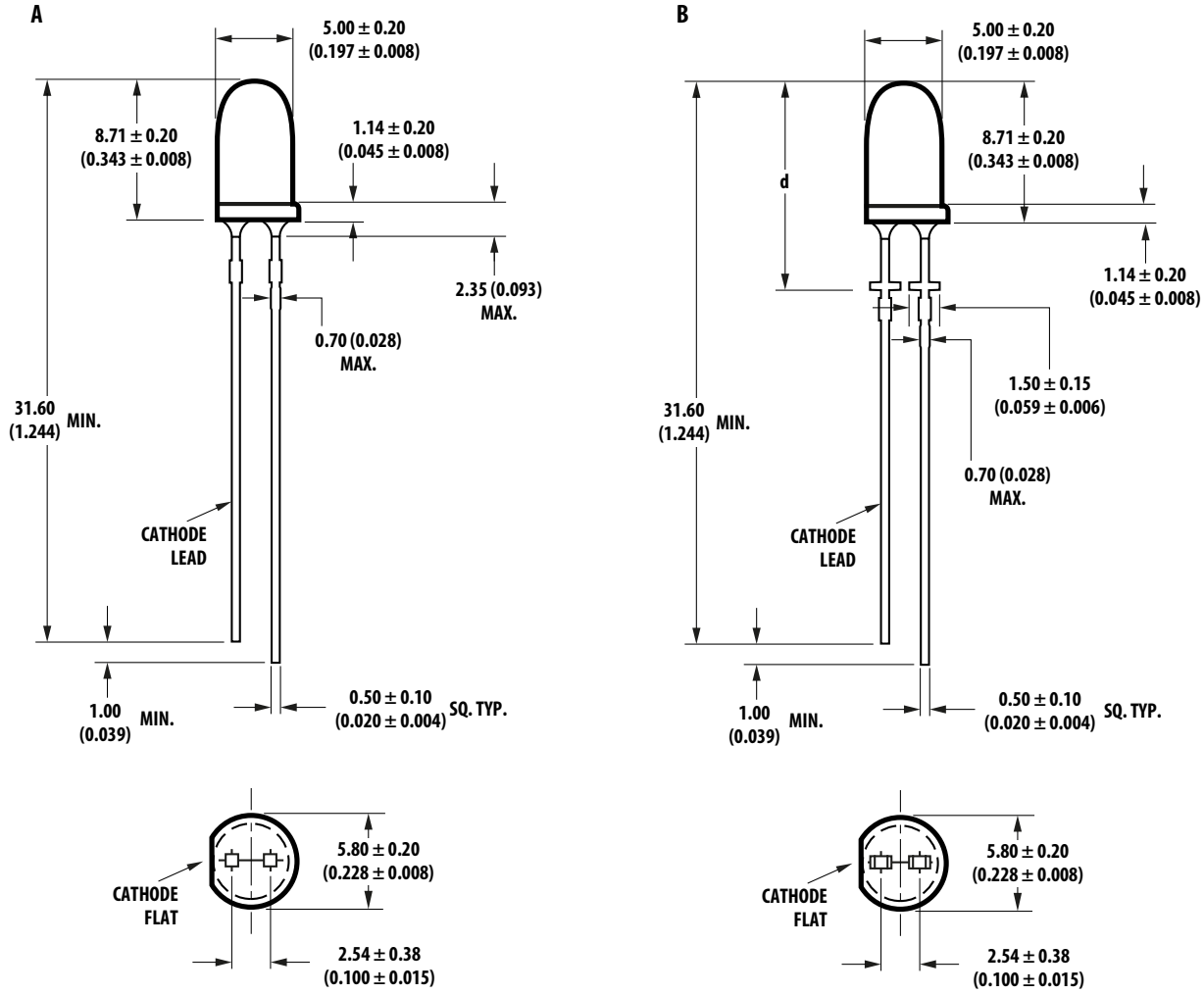

PART NO.	HLMP-XX10	HLMP-XX17	HLMP-XX26	HLMP-XX32
d	12.37 ± 0.25 (0.487 ± 0.010)	12.42 ± 0.25 (0.489 ± 0.010)	12.52 ± 0.25 (0.493 ± 0.010)	11.96 ± 0.25 (0.471 ± 0.010)

NOTE:

1. All dimensions are in millimeters (inches).
2. Tapers shown at top of leads (bottom of lamp package) indicate an epoxy meniscus that may extend about 1 mm (0.040 in.) down the leads.
3. For dome heights above lead standoff seating plane, d, lamp package B, see table.

Absolute Maximum Ratings at T_A = 25°C

Parameter	Value
DC Forward Current[a,b,c]	50 mA
Peak Pulsed Forward Current[b,c]	100 mA
Average Forward Current[c]	30 mA
Reverse Voltage (I_R = 100 µA)	5V
LED Junction Temperature	130°C
Operating Temperature	–40°C to +100°C
Storage Temperature	–40°C to +100°C

a. Derate linearly as shown in Figure 5.

b. For long-term performance with minimal light output degradation, drive currents between 10 mA and 30 mA are recommended. For more information on recommended drive conditions, refer to Application Brief I-024.

c. Operating at currents below 1 mA is not recommended. Contact your local representative for further information.

Electrical/Optical Characteristics at T_A = 25 °C

Parameter	Symbol	Min	Typ	Max	Unit	Test Conditions
Forward Voltage	V_F				V	I_F = 20 mA
Amber (λ_d = 590 nm)		—	2.02	2.4		
Orange (λ_d = 605 nm)		—	1.98	2.4		
Red-Orange (λ_d = 615 nm)		—	1.94	2.4		
Red (λ_d = 626 nm)		—	1.90	2.4		
Reverse Voltage	V_R	5	20	—	V	I_R = 100 µA
Dominant Wavelength	λ_d				nm	I_F = 20 mA
Red		620.0	626.0	630.0		
Amber		584.5	590.0	594.5		
Orange		599.5	605.0	610.5		
Red Orange		612.0	615.0	621.7		
Peak Wavelength	λ_{PEAK}				nm	Peak of Wavelength of Spectral Distribution at I_F = 20 mA
Amber (λ_d = 590 nm)		—	592	—		
Orange (λ_d = 605 nm)		—	609	—		
Red-Orange (λ_d = 615 nm)		—	621	—		
Red (λ_d = 626 nm)		—	635	—		
Spectral Halfwidth	$\Delta\lambda_{½}$	—	17	—	nm	Wavelength Width at Spectral Distribution ½ Power Point at I_F = 20 mA
Speed of Response	τ_s	—	20	—	ns	Exponential Time Constant, $e^{-t/ts}$
Capacitance	C	—	40	—	pF	V_F = 0, f = 1 MHz
Thermal Resistance	$R\theta_{J\text{-}PIN}$	—	240	—	°C/W	LED Junction-to-Cathode Lead
Luminous Efficacy[a]	η_V				lm/W	Emitted Luminous Flux/Electrical Power
Amber (λ_d = 590 nm)		—	480	—		
Orange (λ_d = 605 nm)		—	370	—		
Red-Orange (λ_d = 615 nm)		—	260	—		
Red (λ_d = 626 nm)		—	150	—		
Luminous Flux	φ_V	—	500	—	mlm	I_F = 20 mA
Luminous Efficiency[b]	η_e				lm/W	Emitted Luminous Flux/Electrical Power
Red		—	12	—		
Amber		—	13	—		
Orange		—	13	—		
Red Orange		—	13	—		

a. The radiant intensity, I_e, in watts per steradian, may be found from the equation $I_e = I_v/\eta_v$, where I_v is the luminous intensity in candelas and η_v is the luminous efficacy in lumens/watt.

b. $\eta_e = \varphi_V / I_F \times V_F$, where φ_V is the emitted luminous flux, I_F is electrical forward current, and V_F is the forward voltage.

Part Numbering System

H	L	M	P	-	x_1	x_2	x_3	x_4	-	x_5	x_6	x_7	x_8	x_9

Code	Description	Option	
x_1	Package type	E	5mm Standard Round AlInGaP
x_2	Color	G	Red
		H	Red Orange
		J	Orange
		L	Amber
x_3 x_4	Viewing Angle and Lead Standoffs	08	8° without lead standoffs
		10	10° with lead standoffs
		15	15° without lead standoffs
		17	15° with lead standoffs
		24	23° without lead standoffs
		26	23° with lead standoffs
		30	30° without lead standoffs
		32	30° with lead standoffs
x_5	Minimum intensity bin		Refer to Device Selection Guide
x_6	Maximum intensity bin		Refer to Device Selection Guide
x_7	Color bin selection	0	Full range
		4	Amber Color bin 4 only
		K	Color bin 2 and 4
x_8 x_9	Packaging option	00	Bulk Packaging
		DD	Ammopack
		YY	Flexi-bin: Bulk Packaging
		ZZ	Flexi-bin: Ammopack

NOTE: Refer to AB 5337 for complete information on part numbering system.

Intensity Bin Limits (mcd at 20 mA)

Bin Name[a]	Min.	Max.
K	310	400
L	400	520
M	520	680
N	680	880
P	880	1150
Q	1150	1500
R	1500	1900
S	1900	2500
T	2500	3200
U	3200	4200
V	4200	5500
W	5500	7200
X	7200	9300
Y	9300	12000
Z	12000	16000
1	16000	21000
2	21000	27000

a. Tolerance for each bin limit is ±15%.

Amber Color Bin Limits (nm at 20 mA)

Bin Name[a,b]	Min.	Max.
1	584.5	587
2	587	589.5
4	589.5	592
6	592	594.5

a. Tolerance for each bin limit is ±0.5 nm.

b. Bin categories are established for classification of products. Products may not be available in all bin categories.

Figure 2: Relative Intensity vs. Peak Wavelength

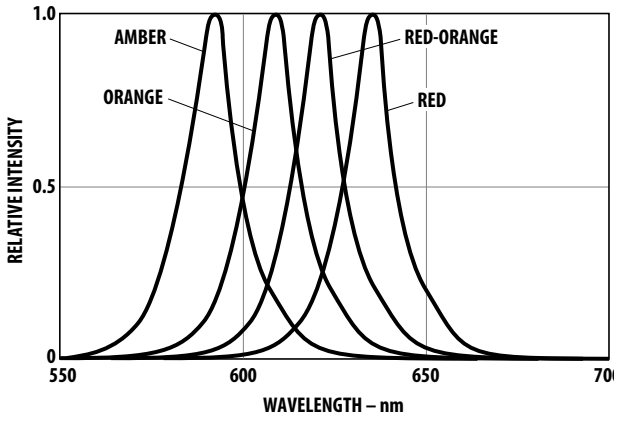

Figure 3: Forward Current vs. Forward Voltage

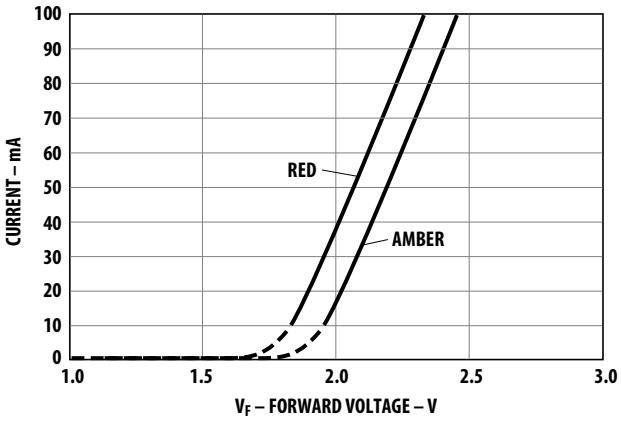

Figure 4: Relative Luminous Intensity vs. Forward Current

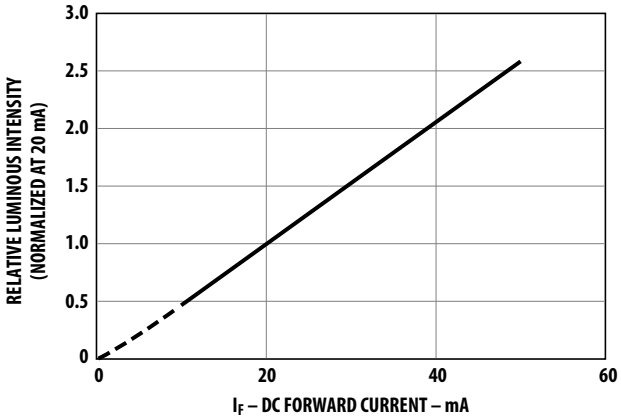

Figure 5: Maximum Forward Current vs. Ambient Temperature

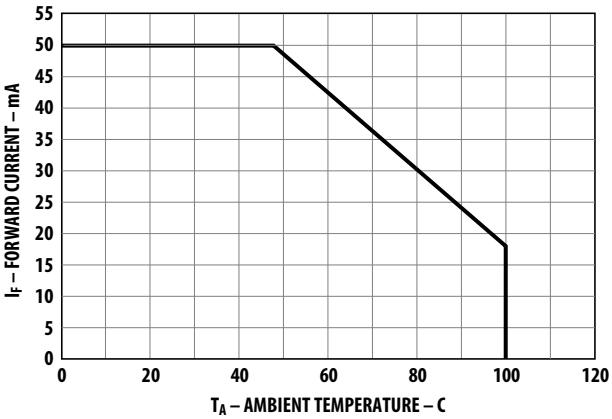

Figure 6: Representative Spatial Radiation Pattern for 8° Viewing Angle Lamps

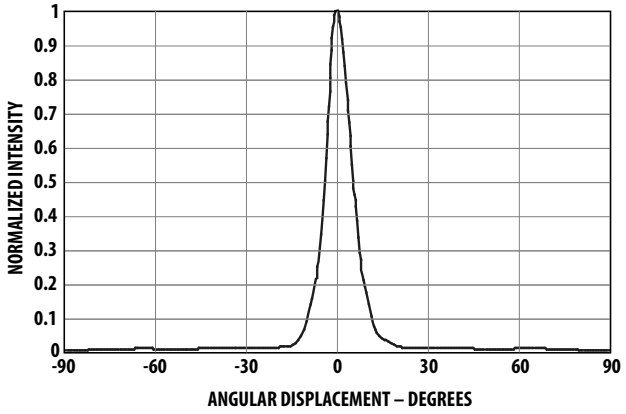

Figure 7: Representative Spatial Radiation Pattern for 15° Viewing Angle Lamps

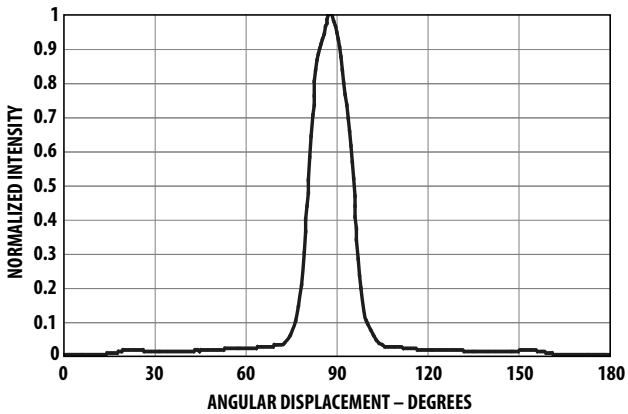

Figure 8: Representative Spatial Radiation Pattern for 23° Viewing Angle Lamps

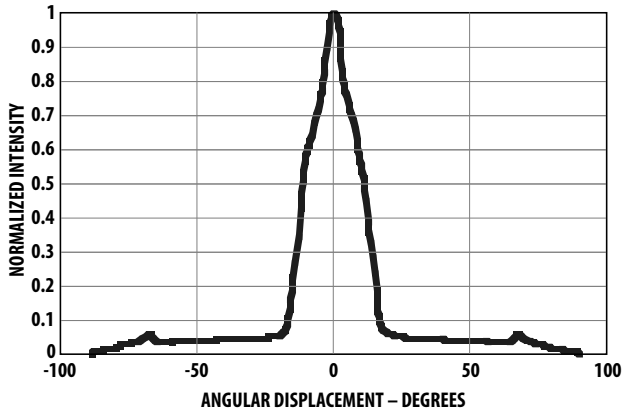

Figure 9: Representative Spatial Radiation Pattern for 30° Viewing Angle Lamps

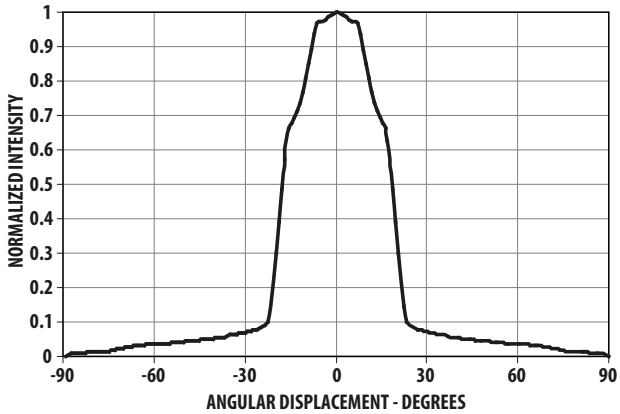

Figure 10: Relative Light Output vs. Junction Temperature

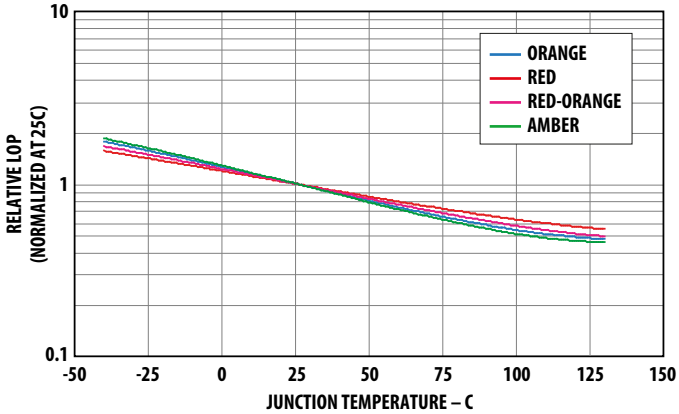

Precautions

Lead Forming

- The leads of an LED lamp may be preformed or cut to length prior to insertion and soldering on PC board.
- For better control, use the proper tool to precisely form and cut the leads to the applicable length rather than doing it manually.
- If manual lead cutting is necessary, cut the leads after the soldering process. The solder connection forms a mechanical ground that prevents mechanical stress due to lead cutting from traveling into LED package. Use this method for hand soldering operation, because the excess lead length also acts as small heat sink.

Soldering and Handling

- Take care during the PCB assembly and soldering process to prevent damage to the LED component.
- The LED component may be effectively hand soldered to PCB; however, do this only under unavoidable circumstances, such as rework. The closest manual soldering distance of the soldering heat source (soldering iron's tip) to the body is 1.59 mm. Soldering the LED using soldering iron tip closer than 1.59 mm might damage the LED.

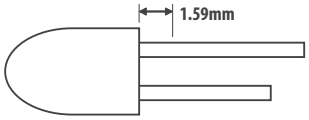

- Properly apply ESD precautions on the soldering station and personnel to prevent ESD damage to the LED component that is ESD sensitive. Refer to Broadcom® application note AN-1142 for details. The soldering iron used should have a grounded tip to ensure electrostatic charge is properly grounded.
- Recommended soldering condition:

	Wave Soldering[a,b]	Manual Solder Dipping
Pre-heat temperature	105°C max.	—
Preheat time	60s max.	—
Peak temperature	250°C mMx.	260°C max.
Dwell time	3s max.	5s max.

a. Above conditions refer to measurement with thermocouple mounted at the bottom of PCB.

b. It is recommended to use only bottom preheaters in order to reduce thermal stress experienced by LED.

- Set and maintain wave soldering parameters according to the recommended temperature and dwell time. Perform daily checks on the soldering profile to ensure that it conforms to the recommended soldering conditions.

NOTE:

1. PCBs with different sizes and designs (component density) will have different heat mass (heat capacity). This might cause a change in temperature experienced by the board if the same wave soldering setting is used. Therefore, recalibrate the soldering profile again before loading a new type of PCB.
2. Broadcom's AlInGaP high-brightness LEDs use a high-efficiency LED die with a single wire bond as shown below. Take extra precautions during wave soldering to ensure that the maximum wave temperature does not exceed 250°C and the solder contact time does not exceed 3s. Overstressing the LED during the soldering process might cause premature failure to the LED due to delamination.

Broadcom LED Configuration

Figure 11: LED Configuration

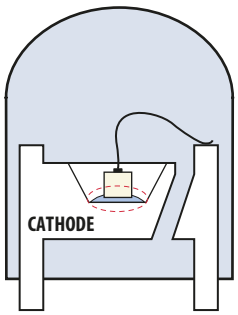

NOTE: Electrical connection between the bottom surface of the LED die and the lead frame is achieved through conductive paste.

- Loosely fit any alignment fixture that is being applied during wave soldering and do not apply weight or force on the LED. Use nonmetal material because it absorbs less heat during the wave soldering process.
- At elevated temperatures, the LED is more susceptible to mechanical stress. Therefore, allow the PCB to cool down to room temperature prior to handling, which includes removal of alignment fixture or pallet.

- If the PCB board contains both through hole (TH) LED and other surface-mount components, solder the surface-mount components on the top side of the PCB. If the surface mount must be on the bottom side, solder these components using reflow soldering prior to the insertion of the TH LED.
- The following table shows the recommended PC board plated through holes (PTH) size for LED component leads.

LED Component Lead Size	Diagonal	Plated Through Hole Diameter
0.45 mm × 0.45 mm (0.018 in. × 0.018 in.)	0.636 mm (0.025 in.)	0.98 mm to 1.08 mm (0.039 in. to 0.043 in.)
0.50 mm × 0.50 mm (0.020 in. × 0.020 in.)	0.707 mm (0.028 in.)	1.05 mm to 1.15 mm (0.041 in. to 0.045 in.)

- Over-sizing the PTH can lead to a twisted LED after clinching. On the other hand, under-sizing the PTH can cause difficulty when inserting the TH LED.

NOTE: Refer to application note AN-5334 for more information about soldering and handling high-brightness TH LED lamps.

Application Precautions

- The drive current of the LED must not exceed the maximum allowable limit across temperature as stated in the data sheet. Constant current driving is recommended to ensure consistent performance.
- LEDs exhibit slightly different characteristics at different drive currents that might result in larger performance variations (such as intensity, wavelength, and forward voltage). Set the application current as close as possible to the test current to minimize these variations.
- The LED is not intended for reverse bias. Use other appropriate components for such purposes. When driving the LED in matrix form, ensure that the reverse bias voltage does not exceed the allowable limit of the LED.

Figure 12: Example of Wave Soldering Temperature Profile for TH LED

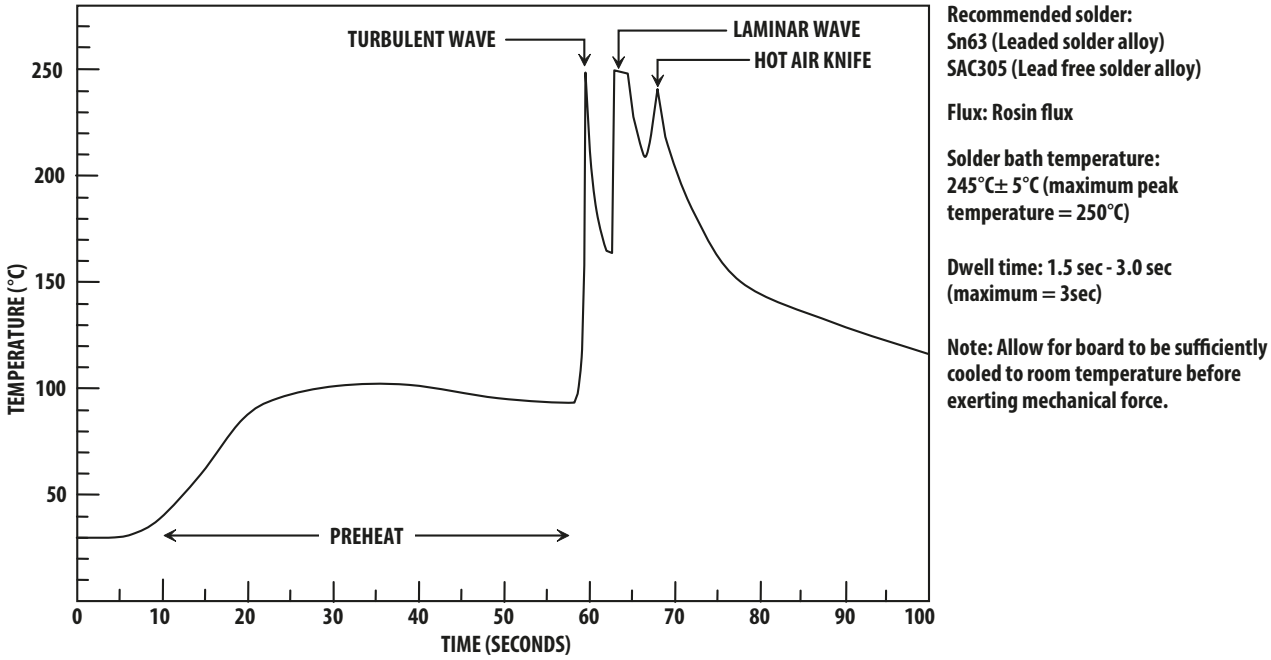

Figure 13: Ammo Pack Drawing

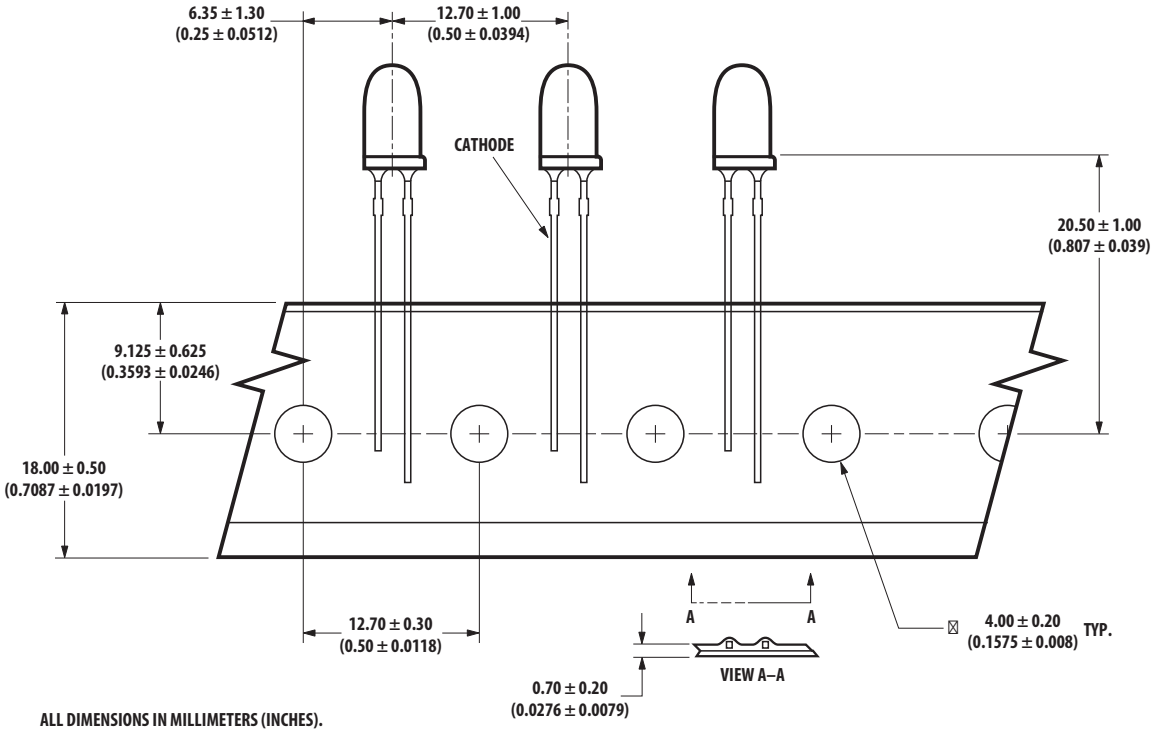

ALL DIMENSIONS IN MILLIMETERS (INCHES).

NOTE: THE AMMO-PACKS DRAWING IS APPLICABLE FOR PACKAGING OPTION -DD & -ZZ AND REGARDLESS OF STANDOFF OR NON-STANDOFF.

Figure 14: Packaging Box for Ammo Packs

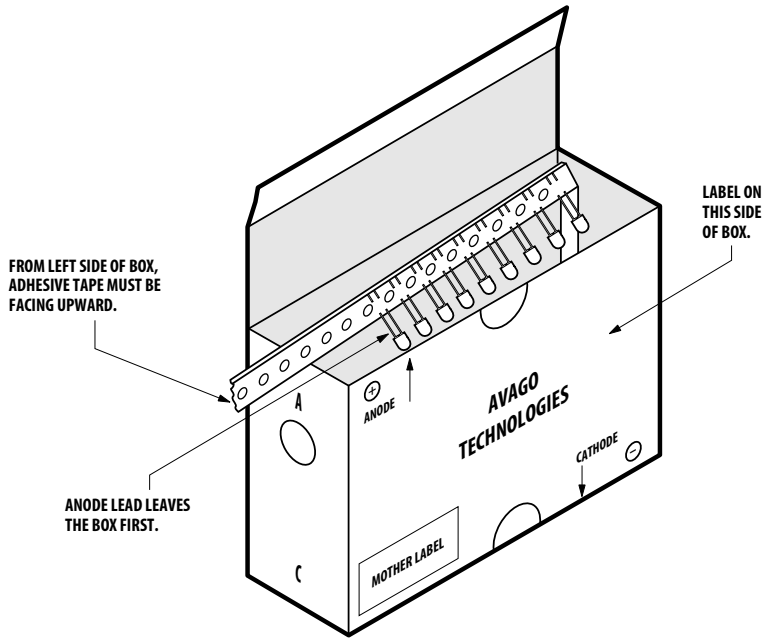

NOTE:
THE DIMENSION FOR AMMO PACK IS APPLICABLE FOR THE DEVICE WITH STANDOFF AND WITHOUT STANDOFF.

Packaging Label

Figure 15: Mother Label (Available on packaging box of ammo pack and shipping box)

Figure 16: Baby Label (Only available on bulk packaging)

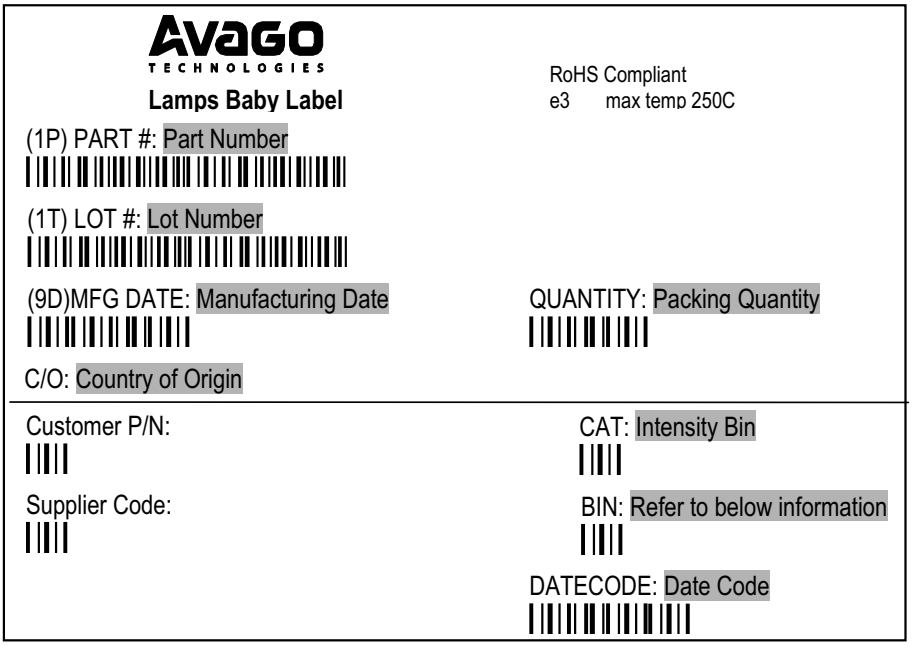

Acronyms and Definitions

BIN:

- (i) Color bin only or V_F bin only

  Applicable for part number with color bins but without V_F bin OR part number with V_F bins and no color bin

  OR
- (ii) Color bin incorporated with V_F Bin

  Applicable for part number that have both color bin and V_F bin

Example:

- (i) Color bin only or V_F bin only
  - BIN: 2 (represent color bin 2 only)
  - BIN: VB (represent V_F bin “VB” only)
- (ii) Color bin incorporate with V_F Bin
  - BIN: 2VB, where:
    - 2 is color bin 2 only
    - VB is V_F bin "VB"

Disclaimer

Broadcom's products and software are not specifically designed, manufactured, or authorized for sale as parts, components, or assemblies for the planning, construction, maintenenace, or direct operation of a nuclear facility or for use in medical devices or applications. The customer is solely responsible, and waives all rights to make claims against Broadcom or its suppliers, for all loss, damage, expense, or liability in connection with such use.

Broadcom, the pulse logo, Connecting everything, Avago Technologies, Avago, and the A logo are among the trademarks of Broadcom and/or its affiliates in the United States, certain other countries, and/or the EU.

Copyright © 2016–2018 Broadcom. All Rights Reserved.

The term "Broadcom" refers to Broadcom Limited and/or its subsidiaries. For more information, please visit www.broadcom.com.

Broadcom reserves the right to make changes without further notice to any products or data herein to improve reliability, function, or design. Information furnished by Broadcom is believed to be accurate and reliable. However, Broadcom does not assume any liability arising out of the application or use of this information, nor the application or use of any product or circuit described herein, neither does it convey any license under its patent rights nor the rights of others.

BROADCOM®

Lead (Pb) Free
RoHS 6 fully
compliant

Компания «ЭлектроПласт» предлагает заключение долгосрочных отношений при поставках импортных электронных компонентов на взаимовыгодных условиях!

Наши преимущества:

- Оперативные поставки широкого спектра электронных компонентов отечественного и импортного производства напрямую от производителей и с крупнейших мировых складов;
- Поставка более 17-ти миллионов наименований электронных компонентов;
- Поставка сложных, дефицитных, либо снятых с производства позиций;
- Оперативные сроки поставки под заказ (от 5 рабочих дней);
- Экспресс доставка в любую точку России;
- Техническая поддержка проекта, помощь в подборе аналогов, поставка прототипов;
- Система менеджмента качества сертифицирована по Международному стандарту ISO 9001;
- Лицензия ФСБ на осуществление работ с использованием сведений, составляющих государственную тайну;
- Поставка специализированных компонентов (Xilinx, Altera, Analog Devices, Intersil, Interpoint, Microsemi, Aeroflex, Peregrine, Syfer, Eurofarad, Texas Instrument, Miteq, Cobham, E2V, MA-COM, Hittite, Mini-Circuits,General Dynamics и др.);

Помимо этого, одним из направлений компании «ЭлектроПласт» является направление «Источники питания». Мы предлагаем Вам помощь Конструкторского отдела:

- Подбор оптимального решения, техническое обоснование при выборе компонента;
- Подбор аналогов;
- Консультации по применению компонента;
- Поставка образцов и прототипов;
- Техническая поддержка проекта;
- Защита от снятия компонента с производства.

Как с нами связаться

Телефон: 8 (812) 309 58 32 (многоканальный)
Факс: 8 (812) 320-02-42
Электронная почта: org@eplast1.ru
Адрес: 198099, г. Санкт-Петербург, ул. Калинина, дом 2, корпус 4, литера А.