THIS DRAWING IS UNPUBLISHED. RELEASED FOR PUBLICATION -,- .
© COPYRIGHT - By - ALL RIGHTS RESERVED.

LOC	DIST
DF	S0

REVISIONS

P	LTR	DESCRIPTION	DATE	DWN	APVD
	AD1	REVISASED PER ECO-11-005030	23MAR11	RK	HMR

PART NO.	A	B	
830611-1	24.00 [609.6]	.25 [6.4]	
830611-2	12.00 [304.8]	.25 [6.4]	
830611-3	6.00 [152.4]	.25 [6.4]	
830611-4	9.00 [228.6]	.25 [6.4]	
830611-5	72.00 [1828.8]	.25 [6.4]	
830611-6	25.50 [647.7]	50 [12.7]	
830611-7	46.50 [1181.1]	.50 [12.7]	OBSOLETE
830611-8	4.00 [101.6]	.38 [9.7]	
830611-9	30.00 [762.0]	.25 [6.4]	
1-830611-0	36.00 [914.4]	.25 [6.4]	
1-830611-1	8.00 [203.2]	.25 [6.4]	
1-830611-2	6.50 [165.1]	.38 [9.7]	
1-830611-3	16.00 [406.4]	.38 [9.7]	
1-830611-4	60.00 [1524.0]	.38 [9.7]	
1-830611-5	20.00 [508.0]	-	
1-830611-6	5.00 [127.0]	.38 [9.7]	
1-830611-7	96.00 [2438.4]	.38 [9.7]	
1-830611-8	10.00 [254.0]	.38 [9.7]	
1-830611-9	21.00 [533.4]	.38 [9.7]	OBSOLETE
2-830611-0	40.00 [1016.0]	.38 [9.7]	
2-830611-1	6.00 [152.4]	.38 [9.7]	
2-830611-2	1200.00 [304800.0]	-	OBSOLETE
2-830611-3	48.00 [1219.2]	.38 [9.7]	
2-830611-4	7.00 [177.8]	.38 [9.7]	
2-830611-5	18.00 [457.2]	.38 [9.7]	
2-830611-6	11.00 [279.4]	.25 [6.4]	
2-830611-7	3.00 [76.2]	.38 [9.7]	OBSOLETE
2-830611-8	9.00 [228.6]	.38 [9.7]	
2-830611-9	15.00 [381.0]	.25 [6.4]	
3-830611-0	3.62 [91.9]	.38 [9.7]	
3-830611-1	8.62 [218.9]	.38 [9.7]	
3-830611-2	15.62 [396.7]	.38 [9.7]	OBSOLETE
3-830611-3	6.12 [155.4]	.38 [9.7]	
3-830611-4	23.62 [599.9]	.38 [9.7]	
3-830611-5	14.00 [355.6]	.38 [9.7]	
3-830611-6	11.50 [292.1]	.25 [6.4]	OBSOLETE
3-830611-7	78.00 [1981.2]	.38 [9.7]	OBSOLETE
3-830611-8	39.38 [1000.2]	.25 [6.4]	
3-830611-9	80.00 [2032.0]	.38 [9.7]	
4-830611-0	19.00 [482.6]	.38 [9.7]	OBSOLETE
4-830611-1	5.00 [127.0]	-	OBSOLETE
4-830611-2	15.50 [393.7]	.50 [12.7]	
4-830611-3	8.12 [206.2]	50 [12.7]	
4-830611-4	32.00 [812.8]	.38 [9.7]	
4-830611-5	28.00 [711.2]	.38 [9.7]	OBSOLETE
4-830611-6	15.75 [400.1]	-	
4-830611-7	11.81 [300.0]	.38 [9.7]	
4-830611-8	12.00 [304.8]	.38 [9.7]	
4-830611-9	44.00 [1117.6]	.38 [9.7]	OBSOLETE
5-830611-0	52.00 [1320.8]	.38 [9.7]	OBSOLETE

PART NO.	A	B	
5-830611-1	120.00 [3048.0]	.38 [9.7]	
5-830611-2	20.00 [508.0]	.50 [12.7]	
5-830611-3	37.00 [939.8]	.50 [12.7]	OBSOLETE
5-830611-4	6.50 [165.1]	.25 [6.4]	OBSOLETE
5-830611-5	10.00 [254.0]	.25 [6.4]	OBSOLETE
5-830611-6	9.50 [241.3]	.25 [6.4]	
5-830611-7	4.00 [101.6]	.25 [6.4]	OBSOLETE
5-830611-8	6.50 [165.1]	.25 [6.4]	OBSOLETE
5-830611-9	10.75 [273.1]	.25 [6.4]	OBSOLETE
6-830611-0	9.75 [247.7]	.25 [6.4]	OBSOLETE
6-830611-1	4.50 [114.3]	.25 [6.4]	OBSOLETE
6-830611-2	31.00 [787.4]	.25 [6.4]	
6-830611-3	38.00 [965.2]	.25 [6.4]	
6-830611-4	12.00 [304.8]	-	
6-830611-5	26.00 [660.4]	.38 [9.7]	
6-830611-6	13.00 [330.2]	.38 [9.7]	OBSOLETE
6-830611-7	260.00 [6604.0]	.38 [9.7]	OBSOLETE
6-830611-8	5.50 [139.7]	.38 [9.7]	OBSOLETE
6-830611-9	180.00 [4572.0]	.38 [9.7]	OBSOLETE
7-830611-0	17.00 [431.8]	.38 [9.7]	
7-830611-1	15.00 [381.0]	.38 [9.7]	OBSOLETE
7-830611-2	6.44 [163.6]	.38 [9.7]	OBSOLETE
7-830611-3	25.00 [635.0]	.38 [9.7]	OBSOLETE
7-830611-4	108 00 [2743.2]	.38 [9.7]	OBSOLETE
7-830611-5	132.0 [3352.8]	.38 [9.7]	OBSOLETE
7-830611-6	156.00 [3962.4]	.38 [9.7]	OBSOLETE
7-830611-7	19.70 [500.4]	.38 [9.7]	OBSOLETE
7-830611-8	394.00 [10007.6]	.38 [9.7]	
7-830611-9	787.50 [20002.5]	.38 [9.7]	OBSOLETE
8-830611-0	13.25 [336.6]	-	OBSOLETE
8-830611-1	7.50 [190.5]	.38 [9.7]	
8-830611-2	24.00 [609.6]	.38 [9.7]	OBSOLETE
8-830611-3	62.00 [1574.8]	-	OBSOLETE
8-830611-4	22.00 [558.8]	.38 [9.7]	OBSOLETE
8-830611-5	5.00 [127.0]	.50 [12.7]	

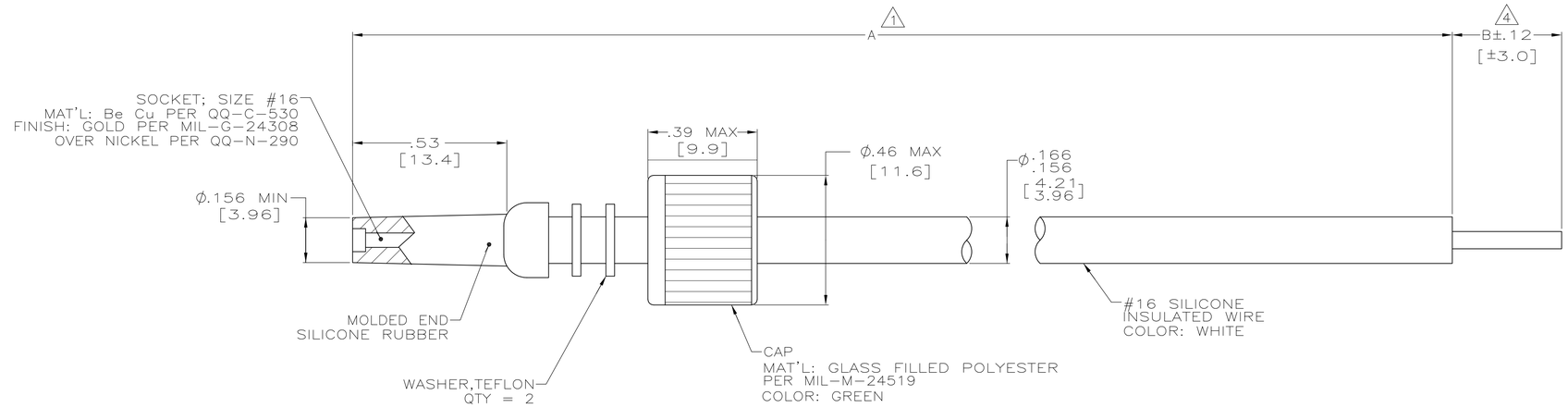

1. TOLERANCE OF LEAD LENGTH:
   UP TO 24 INCHES [609.6] = ±.12 [±3.0]
   24 INCHES [609.6] & UP = ±1%
2. MARKED PER MIL-STD-130.
3. TO MATE WITH AMP LGH-1/2
   RECEPTACLE WITH .53 [13.4] BARREL DEPTH.
4. WHERE APPLICABLE "B" STRIP LENGTH IS SOLDER DIPPED.
5. OPERATING VOLTAGE: 10 KVDC AT 0 TO 70,000 FEET, -55° C TO 125° C.

THIS DRAWING IS A CONTROLLED DOCUMENT.

DIMENSIONS: INCHES[MM]

TOLERANCES UNLESS OTHERWISE SPECIFIED:
0 PLC ± -
1 PLC ± -
2 PLC ± .02 [0.5]
3 PLC ± -
4 PLC ± -
ANGLES ± -

MATERIAL: SEE CALLOUTS
FINISH: -

DWN C.C.THOMAS 1-15-90
CHK D.EABY 1-16-90
APVD D.EABY 1-16-90
PRODUCT SPEC —
APPLICATION SPEC —
WEIGHT —

TE Connectivity

NAME: LEAD ASS'Y, SGL. END, LGH-1/2
—

SIZE	CAGE CODE	DRAWING NO	RESTRICTED TO
A1	00779	C-830611	—

CUSTOMER DRAWING | SCALE 4:1 | SHEET 1 OF 1 | REV AD1

4805 (3/11)

Компания «ЭлектроПласт» предлагает заключение долгосрочных отношений при поставках импортных электронных компонентов на взаимовыгодных условиях!

Наши преимущества:

- Оперативные поставки широкого спектра электронных компонентов отечественного и импортного производства напрямую от производителей и с крупнейших мировых складов;
- Поставка более 17-ти миллионов наименований электронных компонентов;
- Поставка сложных, дефицитных, либо снятых с производства позиций;
- Оперативные сроки поставки под заказ (от 5 рабочих дней);
- Экспресс доставка в любую точку России;
- Техническая поддержка проекта, помощь в подборе аналогов, поставка прототипов;
- Система менеджмента качества сертифицирована по Международному стандарту ISO 9001;
- Лицензия ФСБ на осуществление работ с использованием сведений, составляющих государственную тайну;
- Поставка специализированных компонентов (Xilinx, Altera, Analog Devices, Intersil, Interpoint, Microsemi, Aeroflex, Peregrine, Syfer, Eurofarad, Texas Instrument, Miteq, Cobham, E2V, MA-COM, Hittite, Mini-Circuits,General Dynamics и др.);

Помимо этого, одним из направлений компании «ЭлектроПласт» является направление «Источники питания». Мы предлагаем Вам помощь Конструкторского отдела:

- Подбор оптимального решения, техническое обоснование при выборе компонента;
- Подбор аналогов;
- Консультации по применению компонента;
- Поставка образцов и прототипов;
- Техническая поддержка проекта;
- Защита от снятия компонента с производства.

Как с нами связаться

Телефон: 8 (812) 309 58 32 (многоканальный)
Факс: 8 (812) 320-02-42
Электронная почта: org@eplast1.ru
Адрес: 198099, г. Санкт-Петербург, ул. Калинина, дом 2, корпус 4, литера А.