Cree® XLamp® XT-E LEDs

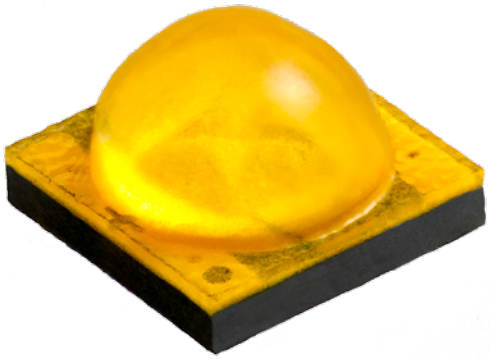

PRODUCT DESCRIPTION

XLamp® XT-E is Cree's highest performing silicon carbide-based LED technology, delivered in Cree's industry-standard XP/XT packaging. XT-E White sets the new standard for high performance and dramatically lowers system cost. XT-E Royal Blue is Cree's highest performing source of royal blue light for remote-phosphor applications.

Cree XLamp LEDs bring high performance and quality of light to a wide range of lighting applications, including remote-phosphor, color-changing, portable and personal, outdoor, indoor-directional, transportation, stage and studio, commercial and emergency-vehicle lighting.

FEATURES

- Available in white, 80-CRI min white, 70-CRI min white and royal blue
- Warm white available in 85- and 90-CRI min.
- New: available in 2200 K CCT
- Binned at 85 °C
- Cool white efficacy of up to 148 lm/W (@ 85 °C, 350 mA)
- Royal Blue wall plug efficiency of up to 53% (@ 85 °C, 350 mA)
- Wide viewing angle: 115-140°
- Thermal resistance: 5 °C/W
- Maximum drive current: 1.5 A
- Electrically neutral thermal path
- Vf binning supported for XT-E White and Royal Blue
- XT-E Royal Blue sorted into 2.5-nm wavelength bins
- Unlimited floor life at ≤ 30 ºC/85% RH
- Reflow solderable - JEDEC J-STD-020C compatible
- RoHS- and REACh-compliant
- UL-recognized component (E349212)

TABLE OF CONTENTS

Product Characteristics 2
Flux Characteristics 3
Relative Spectral Power Distribution 5
Relative Luminous Flux vs. Junction Temperature 6
Electrical Characteristics 7
Relative Luminous Flux vs. Current 7
Relative Chromaticity vs. Current and Temperature 9
Typical Spatial Distribution 10
Thermal Design 11
Reflow Soldering Characteristics .12
Notes 13
Mechanical Dimensions 14
Tape and Reel 15
Packaging 16

NOTE: For remote phosphor applications, a separate license to certain Cree patents is required.

Copyright © 2011-2012 Cree, Inc. All rights reserved. The information in this document is subject to change without notice.
Cree®, the Cree logo and XLamp® are registered trademarks of Cree, Inc.

Cree, Inc.
4600 Silicon Drive
Durham, NC 27703
USA Tel: +1.919.313.5300

PRODUCT CHARACTERISTICS

Characteristics	Unit	Minimum	Typical	Maximum
Thermal resistance, junction to solder point	°C/W		5	
Viewing angle (FWHM) - white	degrees		115	
Viewing angle (FWHM) - royal blue	degrees		140	
Temperature coefficient of voltage	mV/°C		-2.5	
ESD classification (HBM per Mil-Std-883D)			Class 2	
DC forward current	mA			1500
Reverse voltage	V			5
Forward voltage (@ 350 mA, 85 °C)	V		2.85	3.4
LED junction temperature	°C			150

Copyright © 2011-2012 Cree, Inc. All rights reserved. The information in this document is subject to change without notice. Cree®, the Cree logo and XLamp® are registered trademarks of Cree, Inc.

FLUX CHARACTERISTICS - WHITE (T_J = 85 °C)

The following table provides several base order codes for XLamp XT-E White LEDs. It is important to note that the base order codes listed here are a subset of the total available order codes for the product family. For more order codes, as well as a complete description of the order-code nomenclature, please consult the XLamp XT-E Binning and Labeling document.

Color	CCT Range		Base Order Codes Minimum Luminous Flux @ 350 mA			Calculated Minimum Luminous Flux (lm)** @ 85 °C		Order Code
	Min.	Max.	Group	Flux (lm) @ 85 °C	Flux (lm) @ 25 °C*	700 mA	1500 mA	
Cool White	5000 K	8300 K	R3	122	140	217	376	XTEAWT-00-0000-000000F51
			R4	130	149	231	401	XTEAWT-00-0000-000000G51
			R5	139	160	247	428	XTEAWT-00-0000-000000H51
Outdoor White	4000 K	6200 K	R3	122	140	217	376	XTEAWT-00-0000-000000FE3
			R4	130	149	231	401	XTEAWT-00-0000-000000GE3
			R5	139	160	247	428	XTEAWT-00-0000-000000HE3
Neutral White	3700 K	5000 K	R2	114	131	203	351	XTEAWT-00-0000-000000EF4
			R3	122	140	217	376	XTEAWT-00-0000-000000FF4
			R4	130	149	231	401	XTEAWT-00-0000-000000GF4
Warm White	2200 K	3700 K	Q3	93.9	108	167	289	XTEAWT-00-0000-00000LBE7
			Q4	100	115	178	308	XTEAWT-00-0000-00000LCE7
			Q5	107	123	191	330	XTEAWT-00-0000-00000LDE7
70 CRI Minimum Neutral White	2600 K	8300 K	Q4	100	115	178	308	XTEAWT-00-0000-00000BCE7
			Q5	107	123	191	330	XTEAWT-00-0000-00000BDF6
			R2	114	131	203	351	XTEAWT-00-0000-00000BEF5
			R3	122	140	217	376	XTEAWT-00-0000-00000BFC3
			R4	130	149	231	401	XTEAWT-00-0000-00000BG53
80 CRI Minimum White	2200 K	6200 K	Q3	93.9	108	167	289	XTEAWT-00-0000-00000HBE7
			Q4	100	115	178	308	XTEAWT-00-0000-00000HCE6
			Q5	107	123	191	330	XTEAWT-00-0000-00000HDE5
			R2	114	131	203	351	XTEAWT-00-0000-00000HEF4
			R3	122	140	217	376	XTEAWT-00-0000-00000HF50
85-CRI Minimum Warm White	2600 K	3700 K	P3	73.9	85	132	228	XTEAWT-00-0000-00000P8E7
			P4	80.6	93	144	248	XTEAWT-00-0000-00000P9E7
			Q2	87.4	100	156	269	XTEAWT-00-0000-00000PAE7
90-CRI Minimum Warm White	2600 K	3700 K	P3	73.9	85	132	228	XTEAWT-00-0000-00000U8E7
			P4	80.6	93	144	248	XTEAWT-00-0000-00000U9E7
			Q2	87.4	100	156	269	XTEAWT-00-0000-00000UAE7

Notes:
- Cree maintains a tolerance of ±7% on flux and power measurements, ±0.005 on chromaticity (CCx, CCy) measurements and ±2 on CRI measurements.
- Typical CRI for Neutral White, 3,700 K - 5,000K CCT is 75.
- Typical CRI for Warm White, 2,600 K - 3,700 K CCT is 80.

* Flux values @ 25 °C are calculated and for reference only.
** Calculated flux values at 700 mA and 1500 mA are for reference only.

Copyright © 2011-2012 Cree, Inc. All rights reserved. The information in this document is subject to change without notice. Cree®, the Cree logo and XLamp® are registered trademarks of Cree, Inc.

FLUX CHARACTERISTICS - ROYAL BLUE (T_J = 85 °C)

The following table provides order codes for XLamp XT-E Royal Blue LEDs. Additional information on the performance grouping and codes for XT-E Royal Blue LEDs can be found in the XT-E Binning and Labeling document.

DWL Kit Codes	Dominant Wavelength Range				Order Codes, Minimum Radiant Flux @ 350 mA, T_J=85 °C		
	Min.		Max.				
	Group	DWL (nm)	Group	DWL (nm)	500 mW - Radiant Flux Group Code 32 (L)	525 mW - Radiant Flux Group Code 33 (M)	550 mW - Radiant Flux Group Code 34 (N)
01	D36	450	D57	465	XTEARY-00-0000-000000L01	XTEARY-00-0000-000000M01	XTEARY-00-0000-000000N01
02	D36	450	D47	460	XTEARY-00-0000-000000L02	XTEARY-00-0000-000000M02	XTEARY-00-0000-000000N02
03	D46	455	D57	465	XTEARY-00-0000-000000L03	XTEARY-00-0000-000000M03	XTEARY-00-0000-000000N03
04	D36	450	D37	455	XTEARY-00-0000-000000L04	XTEARY-00-0000-000000M04	XTEARY-00-0000-000000N04
05	D46	455	D47	460	XTEARY-00-0000-000000L05	XTEARY-00-0000-000000M05	XTEARY-00-0000-000000N05
06	D56	460	D57	465	XTEARY-00-0000-000000L06	XTEARY-00-0000-000000M06	XTEARY-00-0000-000000N06
07	D37	452.5	D46	457.5	XTEARY-00-0000-000000L07	XTEARY-00-0000-000000M07	XTEARY-00-0000-000000N07
08	D47	457.5	D56	462.5	XTEARY-00-0000-000000L08	XTEARY-00-0000-000000M08	XTEARY-00-0000-000000N08
09	D37	452.5	D56	462.5	XTEARY-00-0000-000000L09	XTEARY-00-0000-000000M09	XTEARY-00-0000-000000N09

DWL Kit Codes	Dominant Wavelength Range				Order Codes, Minimum Radiant Flux @ 350 mA, T_j=85 °C	
	Min.		Max.			
	Group	DWL (nm)	Group	DWL (nm)	575 mW - Radiant Flux Group Code 35 (P)	600 mW - Radiant Flux Group Code 36 (Q)
01	D36	450	D57	465	XTEARY-00-0000-000000P01	XTEARY-00-0000-000000Q01
02	D36	450	D47	460	XTEARY-00-0000-000000P02	XTEARY-00-0000-000000Q02
03	D46	455	D57	465	XTEARY-00-0000-000000P03	
04	D36	450	D37	455	XTEARY-00-0000-000000P04	XTEARY-00-0000-000000Q04
05	D46	455	D47	460	XTEARY-00-0000-000000P05	
06	D56	460	D57	465		
07	D37	452.5	D46	457.5	XTEARY-00-0000-000000P07	
08	D47	457.5	D56	462.5		
09	D37	452.5	D56	462.5	XTEARY-00-0000-000000P09	

Note:
- Cree maintains a tolerance of ±7% on flux and power measurements, ±0.005 on chromaticity (CCx, CCy) measurements and ±2 on CRI measurements.

Copyright © 2011-2012 Cree, Inc. All rights reserved. The information in this document is subject to change without notice. Cree®, the Cree logo and XLamp® are registered trademarks of Cree, Inc.

RELATIVE SPECTRAL POWER DISTRIBUTION - WHITE

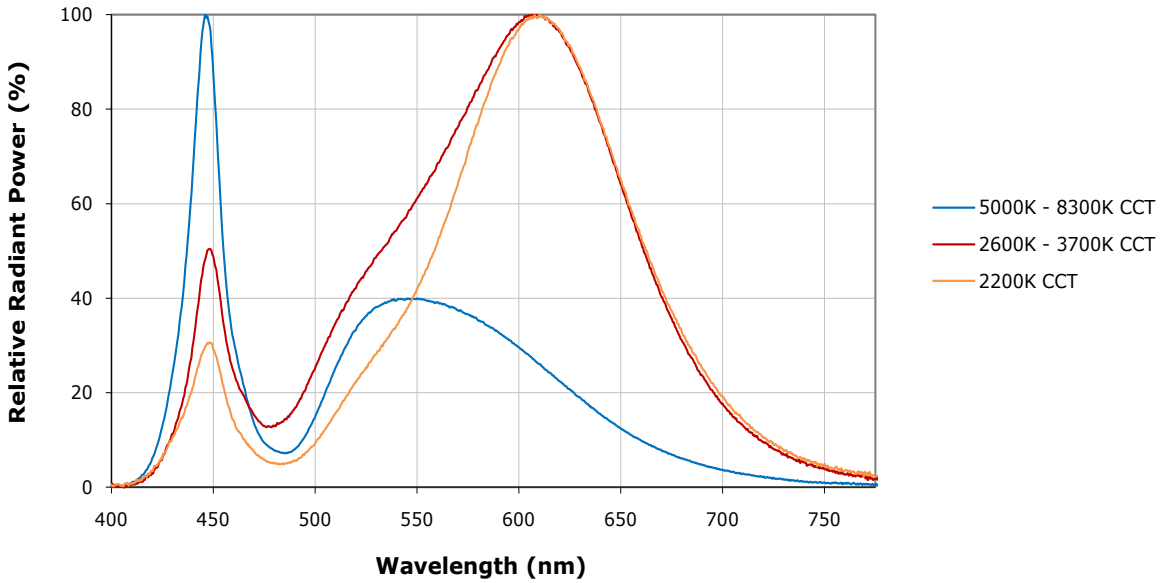

RELATIVE SPECTRAL POWER DISTRIBUTION - ROYAL BLUE

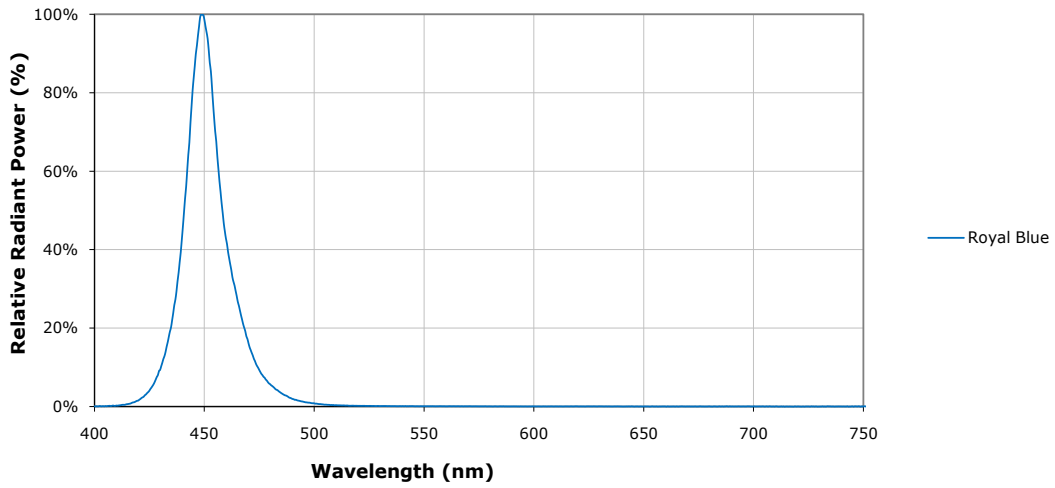

Copyright © 2011-2012 Cree, Inc. All rights reserved. The information in this document is subject to change without notice. Cree®, the Cree logo and XLamp® are registered trademarks of Cree, Inc.

RELATIVE LUMINOUS FLUX VS. JUNCTION TEMPERATURE (I_F = 350 mA) - WHITE

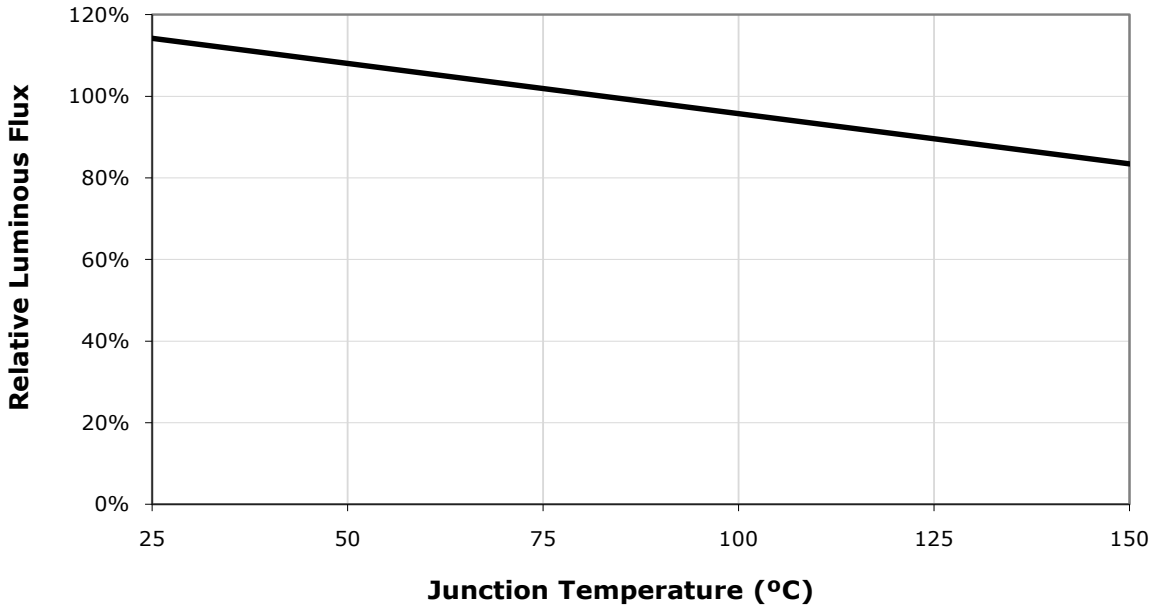

RELATIVE RADIANT FLUX VS. JUNCTION TEMPERATURE (I_F = 350 mA) - ROYAL BLUE

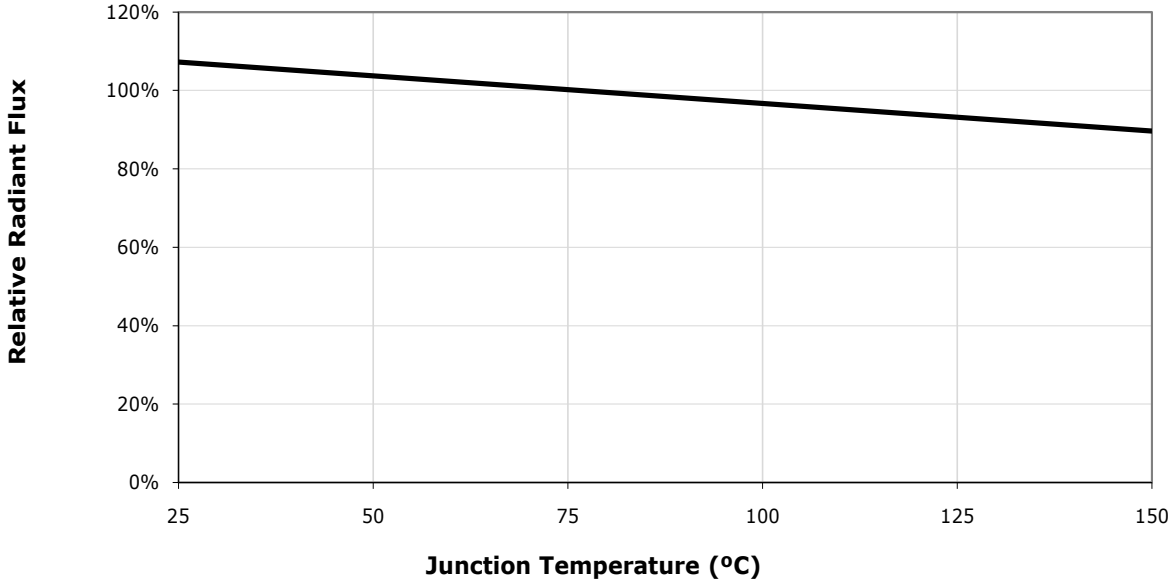

Copyright © 2011-2012 Cree, Inc. All rights reserved. The information in this document is subject to change without notice. Cree®, the Cree logo and XLamp® are registered trademarks of Cree, Inc.

ELECTRICAL CHARACTERISTICS (T_J = 85 °C)

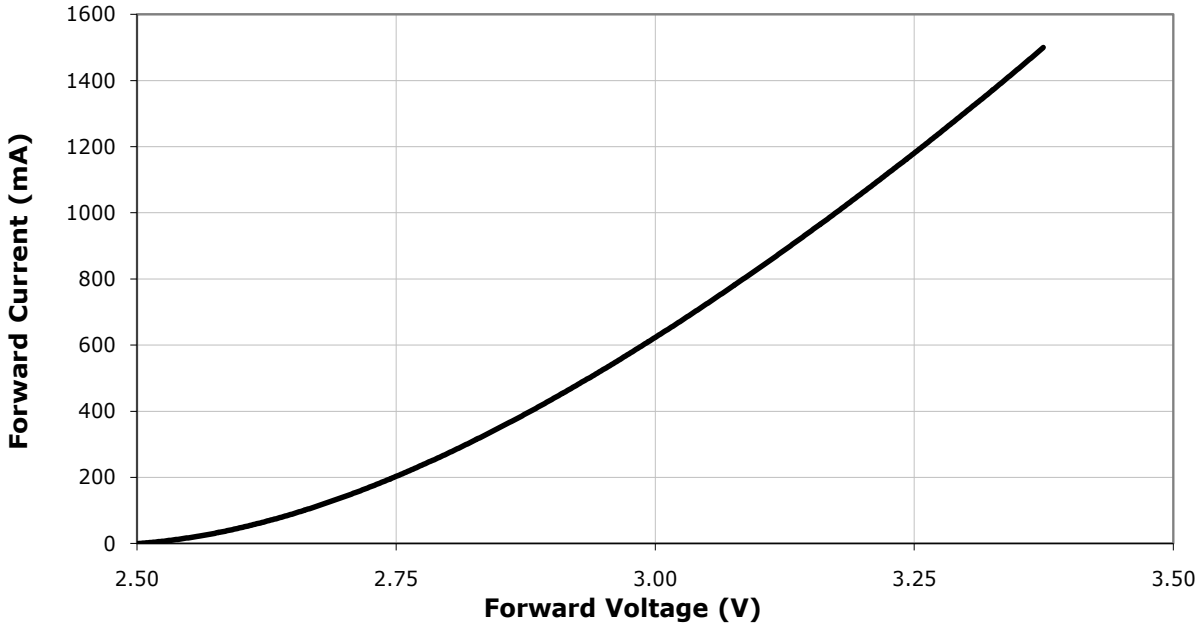

RELATIVE LUMINOUS FLUX VS. CURRENT (T_J = 85 °C) - WHITE

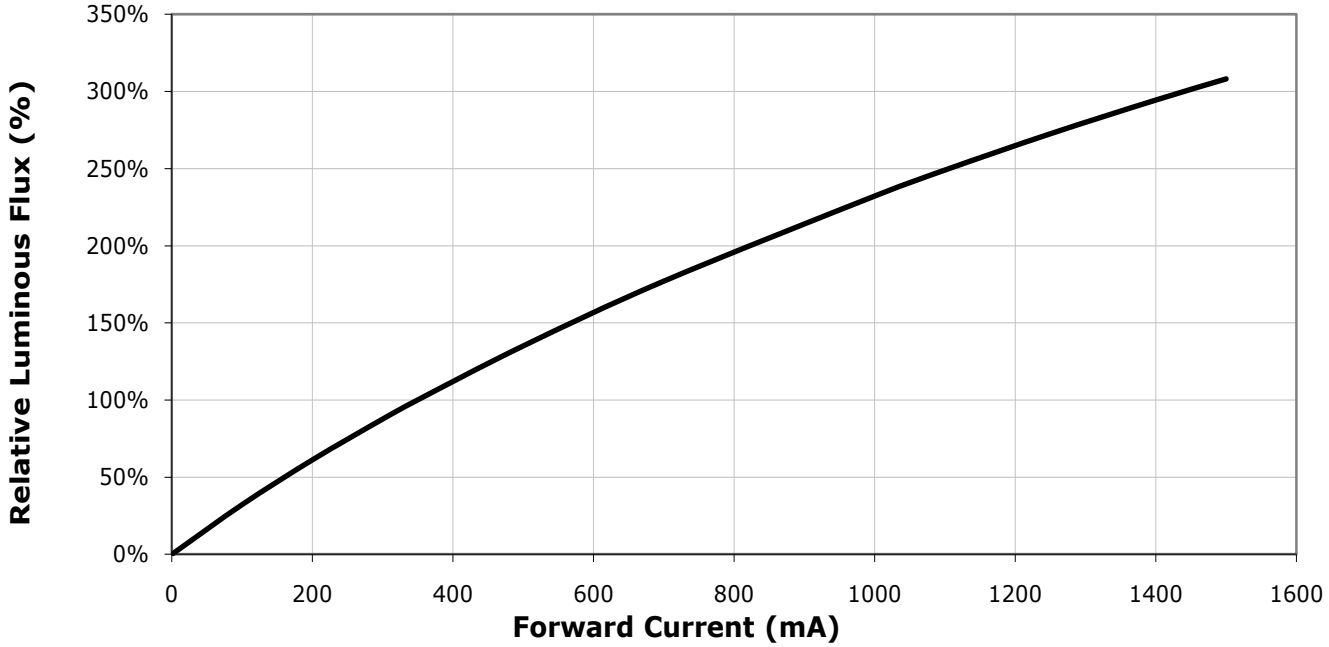

Copyright © 2011-2012 Cree, Inc. All rights reserved. The information in this document is subject to change without notice. Cree®, the Cree logo and XLamp® are registered trademarks of Cree, Inc.

RELATIVE RADIANT FLUX VS. CURRENT (T_J = 85 °C) - ROYAL BLUE

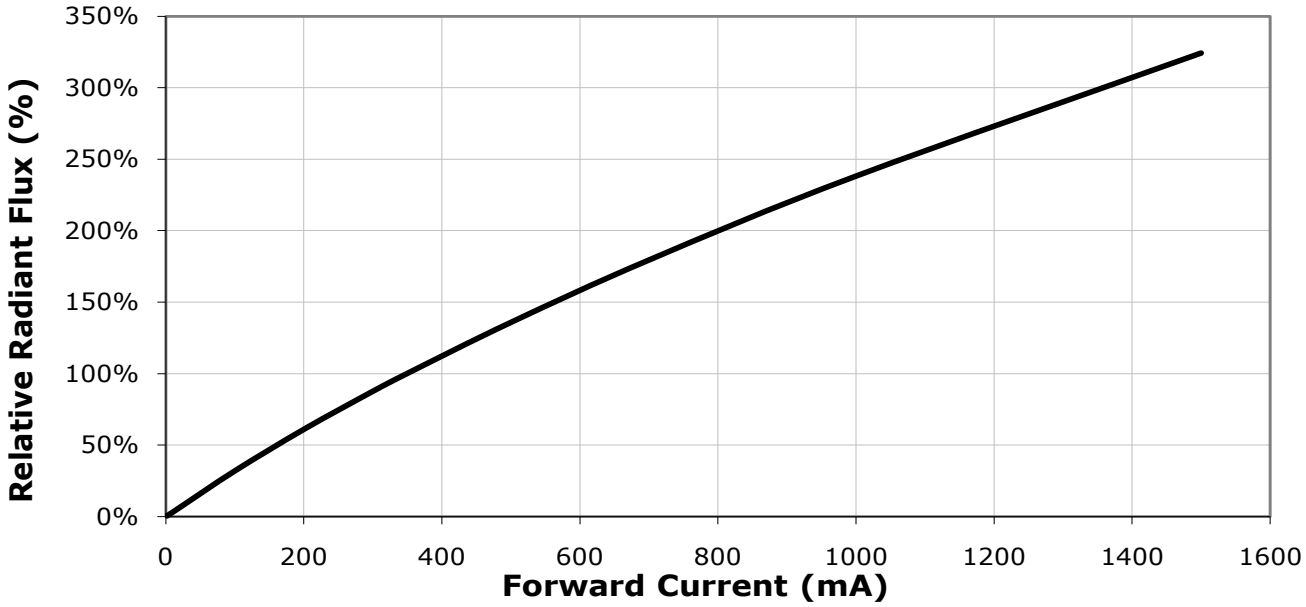

Copyright © 2011-2012 Cree, Inc. All rights reserved. The information in this document is subject to change without notice. Cree®, the Cree logo and XLamp® are registered trademarks of Cree, Inc.

RELATIVE CHROMATICITY VS. CURRENT AND TEMPERATURE (WARM WHITE)

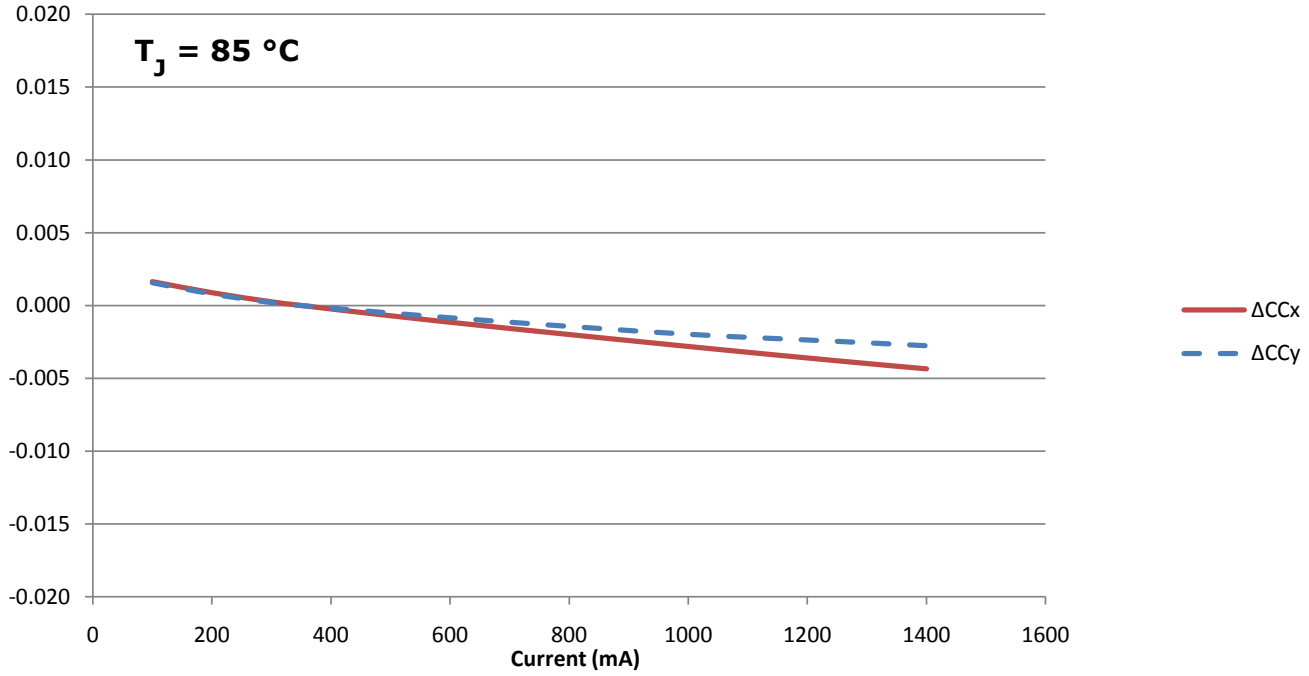

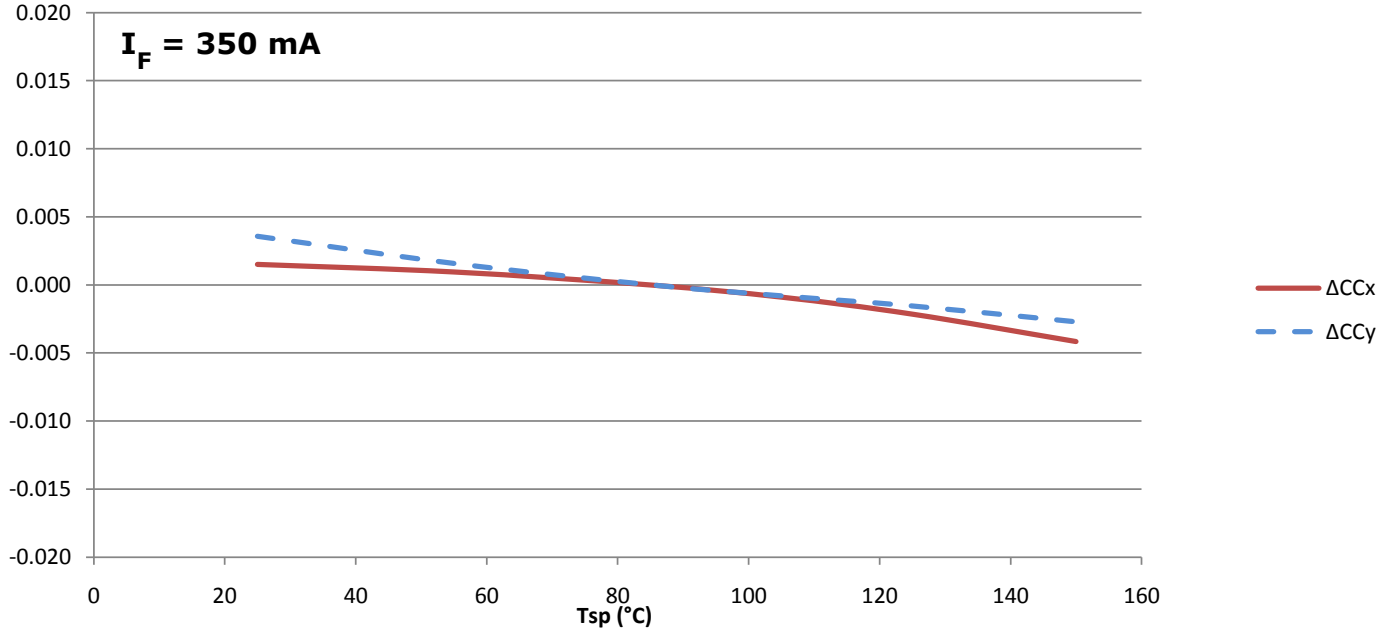

Copyright © 2011-2012 Cree, Inc. All rights reserved. The information in this document is subject to change without notice. Cree®, the Cree logo and XLamp® are registered trademarks of Cree, Inc.

TYPICAL SPATIAL DISTRIBUTION - WHITE

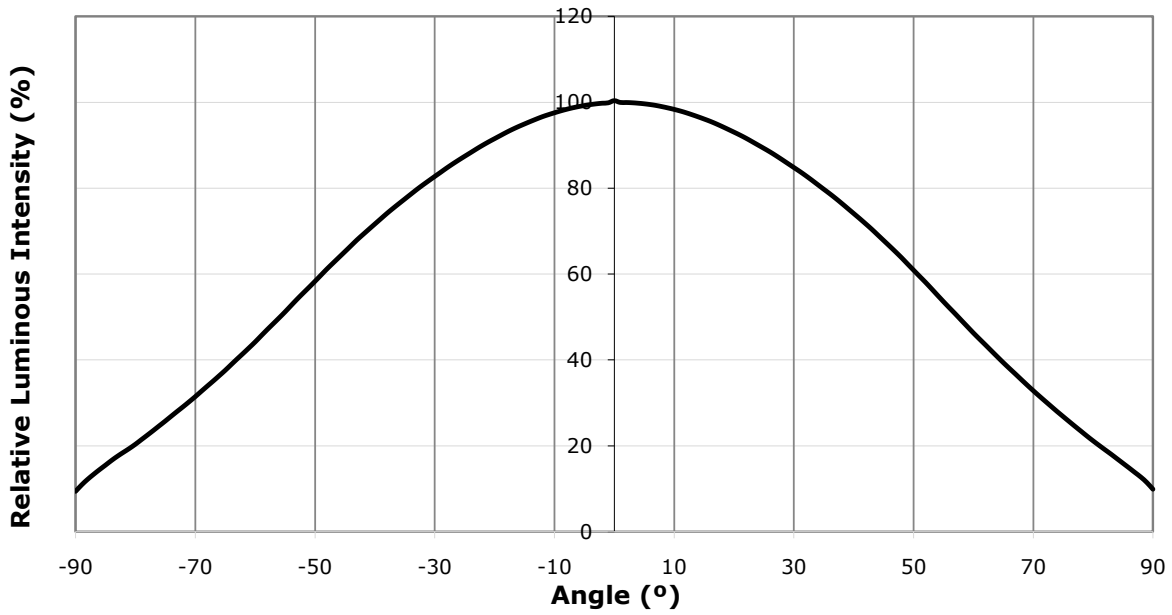

TYPICAL SPATIAL DISTRIBUTION - ROYAL BLUE

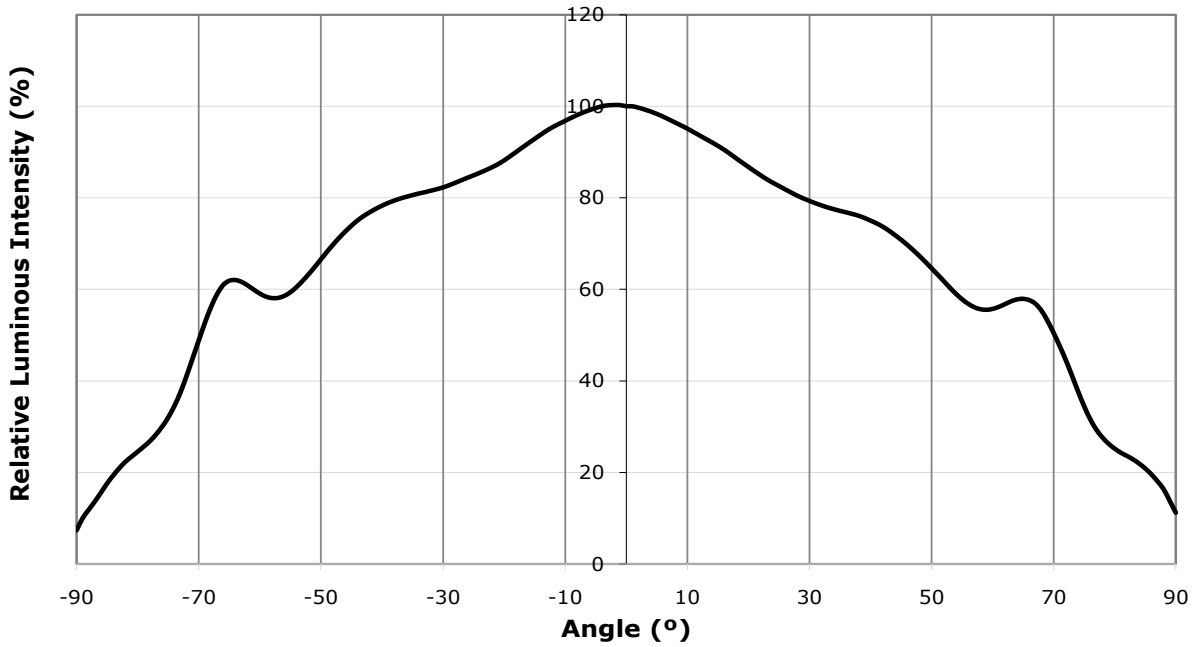

Copyright © 2011-2012 Cree, Inc. All rights reserved. The information in this document is subject to change without notice. Cree®, the Cree logo and XLamp® are registered trademarks of Cree, Inc.

THERMAL DESIGN

The maximum forward current is determined by the thermal resistance between the LED junction and ambient. It is crucial for the end product to be designed in a manner that minimizes the thermal resistance from the solder point to ambient in order to optimize lamp life and optical characteristics.

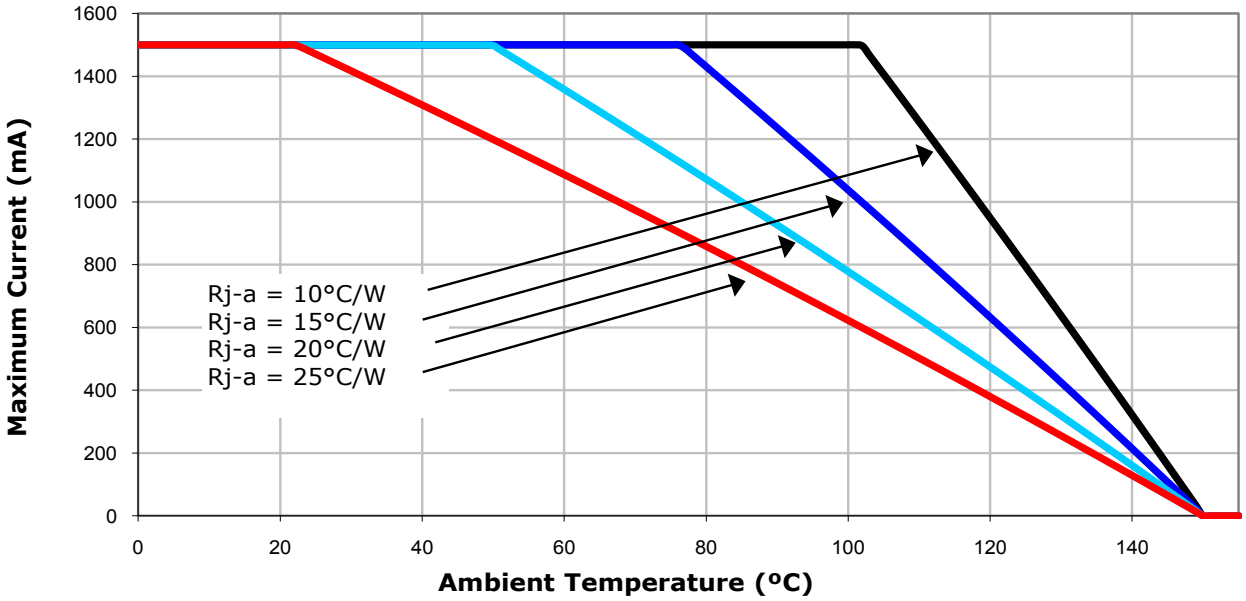

Copyright © 2011-2012 Cree, Inc. All rights reserved. The information in this document is subject to change without notice. Cree®, the Cree logo and XLamp® are registered trademarks of Cree, Inc.

REFLOW SOLDERING CHARACTERISTICS

In testing, Cree has found XLamp XT-E LEDs to be compatible with JEDEC J-STD-020C, using the parameters listed below. As a general guideline, Cree recommends that users follow the recommended soldering profile provided by the manufacturer of solder paste used.

Note that this general guideline may not apply to all PCB designs and configurations of reflow soldering equipment.

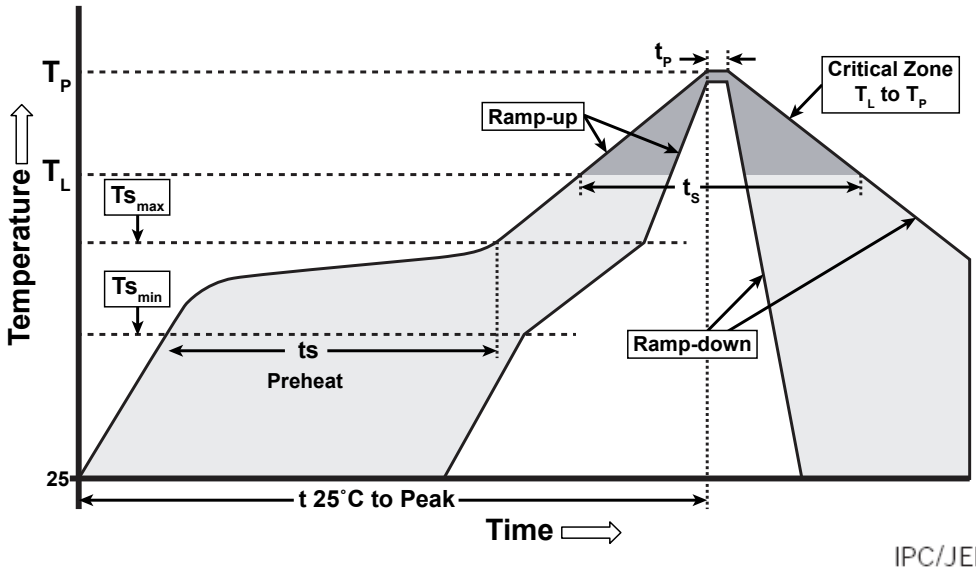

IPC/JEDEC J-STD-020C

Profile Feature	Lead-Based Solder	Lead-Free Solder
Average Ramp-Up Rate (Ts_{max} to Tp)	3 °C/second max.	3 °C/second max.
Preheat: Temperature Min (Ts_{min})	100 °C	150 °C
Preheat: Temperature Max (Ts_{max})	150 °C	200 °C
Preheat: Time (ts_{min} to ts_{max})	60-120 seconds	60-180 seconds
Time Maintained Above: Temperature (T_L)	183 °C	217 °C
Time Maintained Above: Time (t_L)	60-150 seconds	60-150 seconds
Peak/Classification Temperature (Tp)	215 °C	260 °C
Time Within 5 °C of Actual Peak Temperature (tp)	10-30 seconds	20-40 seconds
Ramp-Down Rate	6 °C/second max.	6 °C/second max.
Time 25 °C to Peak Temperature	6 minutes max.	8 minutes max.

Note: All temperatures refer to the topside of the package, measured on the package body surface.

Copyright © 2011-2012 Cree, Inc. All rights reserved. The information in this document is subject to change without notice. Cree®, the Cree logo and XLamp® are registered trademarks of Cree, Inc.

NOTES

Lumen Maintenance Projections

Cree now uses standardized IES LM-80-08 and TM-21-11 methods for collecting long-term data and extrapolating LED lumen maintenance. For information on the specific LM-80 data sets available for this LED, refer to the public LM-80 results document at www.cree.com/xlamp_app_notes/LM80_results.

Please read the XLamp Long-Term Lumen Maintenance application note at www.cree.com/xlamp_app_notes/lumen_maintenance for more details on Cree's lumen maintenance testing and forecasting. Please read the XLamp Thermal Management application note at www.cree.com/xlamp_app_notes/thermal_management for details on how thermal design, ambient temperature, and drive current affect the LED junction temperature.

Moisture Sensitivity

In testing, Cree has found XLamp XT-E LEDs to have unlimited floor life in conditions ≤30 ºC/85% relative humidity (RH). Moisture testing included a 168-hour soak at 85 ºC/85% RH followed by 3 reflow cycles, with visual and electrical inspections at each stage.

Cree recommends keeping XLamp LEDs in their sealed moisture-barrier packaging until immediately prior to use. Cree also recommends returning any unused LEDS to the resealable moisture-barrier bag and closing the bag immediately fter use.

RoHS Compliance

The levels of RoHS restricted materials in this product are below the maximum concentration values (also referred to as the threshold limits) permitted for such substances, or are used in an exempted application, in accordance with EU Directive 2011/65/EC (RoHS2), as amended through June 8, 2011. RoHS Declarations for this product can be obtain from your Cree representative or obtained from the Product Ecology section of www.cree.com.

REACh Compliance

REACh substances of high concern (SVHCs) information is available for this product. Since the European Chemical Agency (ECHA) has published notices of their intent to frequently revise the SVHC listing for the foreseeable future, please contact a Cree representative to insure you get the most up-to-date REACh Declaration. Historical REACh banned substance information (substances restricted or banned in the EU prior to 2010) is also available upon request.

UL Recognized Component

Level 4 enclosure consideration. The LED package or a portion thereof has been investigated as a fire and electrical enclosure per ANSI/UL 8750.

Vision Advisory Claim

WARNING: Do not look at an exposed lamp in operation. Eye injury can result. See LED Eye Safety at www.cree.com/xlamp_app_notes/led_eye_safety.

Copyright © 2011-2012 Cree, Inc. All rights reserved. The information in this document is subject to change without notice. Cree®, the Cree logo and XLamp® are registered trademarks of Cree, Inc.

MECHANICAL DIMENSIONS

All measurements are ±.13 mm unless otherwise indicated.

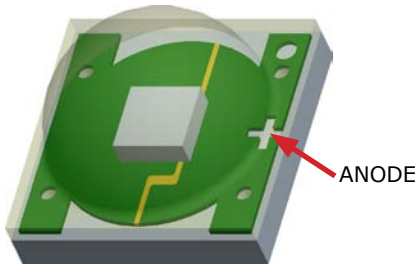

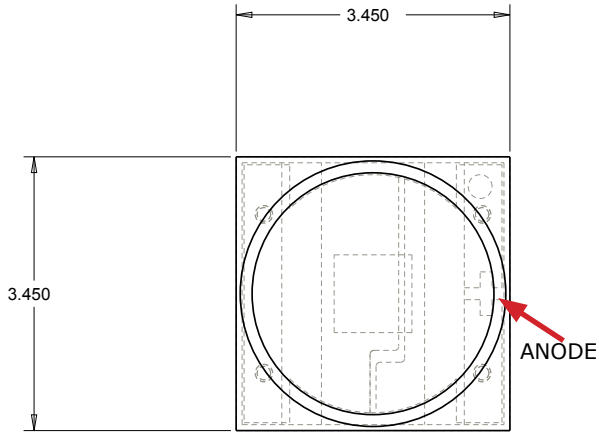

Top View

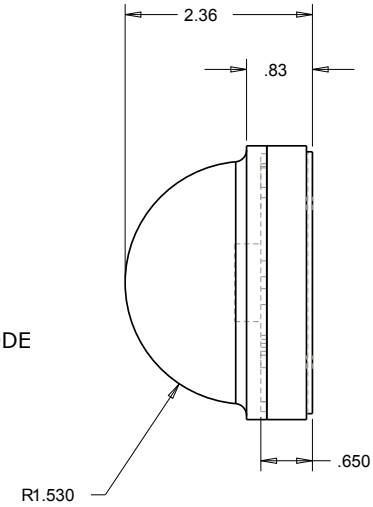

Side View

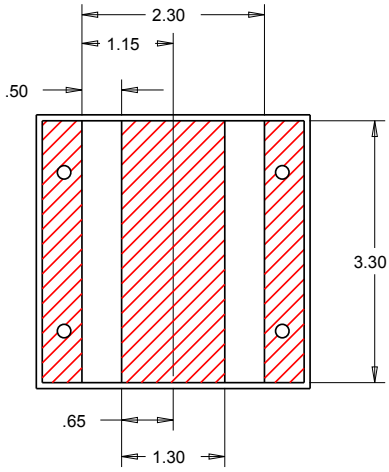

Bottom View

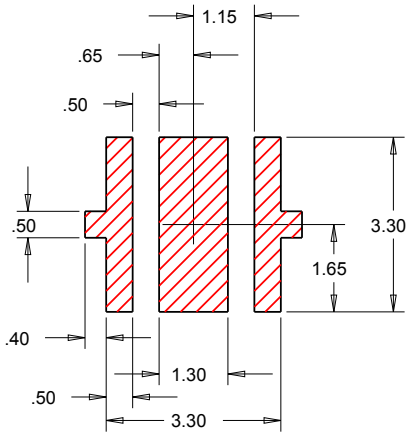

Recommended PCB Solder Pad

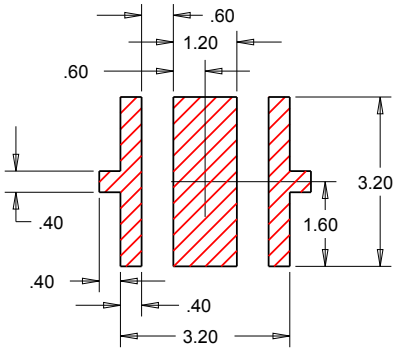

Recommended Stencil Pattern (Shaded Area Is Open)

Copyright © 2011-2012 Cree, Inc. All rights reserved. The information in this document is subject to change without notice. Cree®, the Cree logo and XLamp® are registered trademarks of Cree, Inc.

TAPE AND REEL

All Cree carrier tapes conform to EIA-481D, Automated Component Handling Systems Standard.

All dimensions in mm.

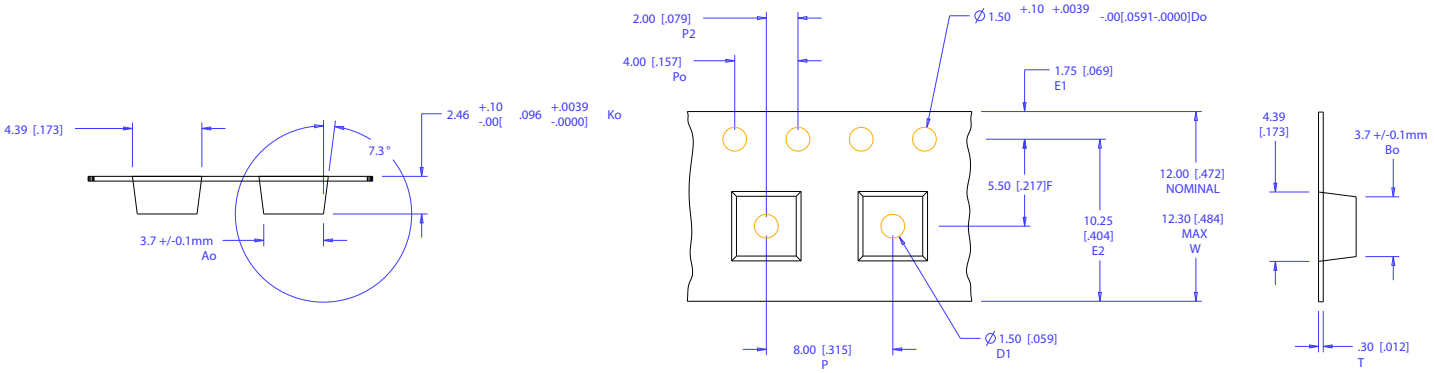

POCKET SIZE	
Ao -	3.7mm +/-0.1mm
Bo -	3.7mm +/-0.1mm
Ko -	2.46mm +0.1/-0mm

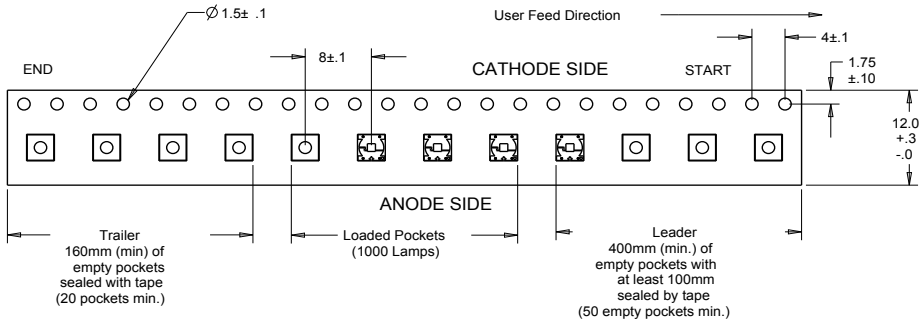

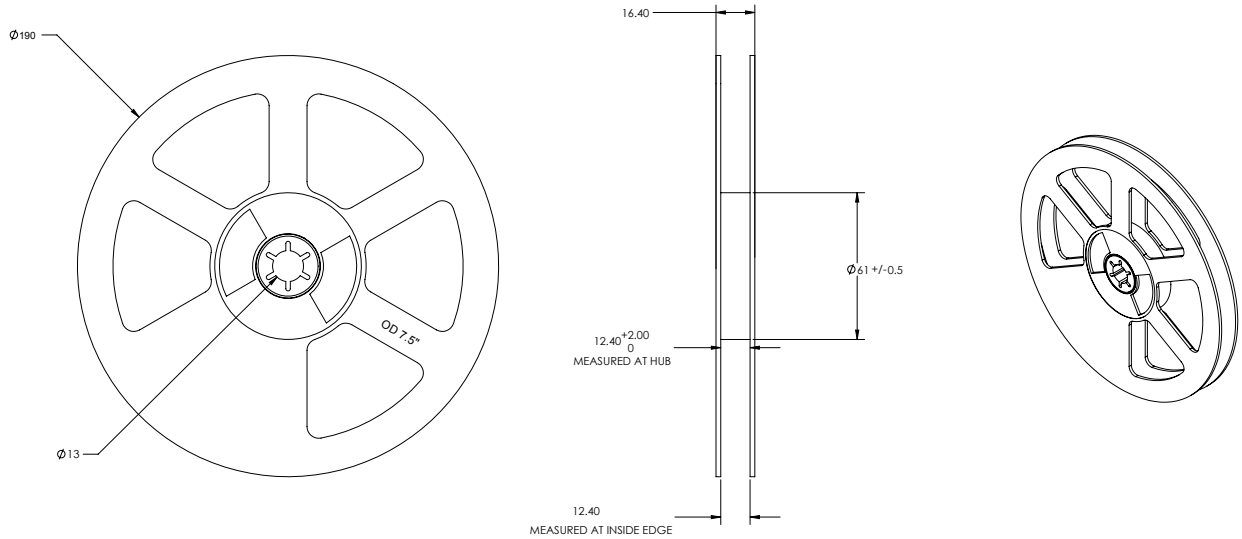

Copyright © 2011-2012 Cree, Inc. All rights reserved. The information in this document is subject to change without notice. Cree®, the Cree logo and XLamp® are registered trademarks of Cree, Inc.

PACKAGING

Unpackaged Reel

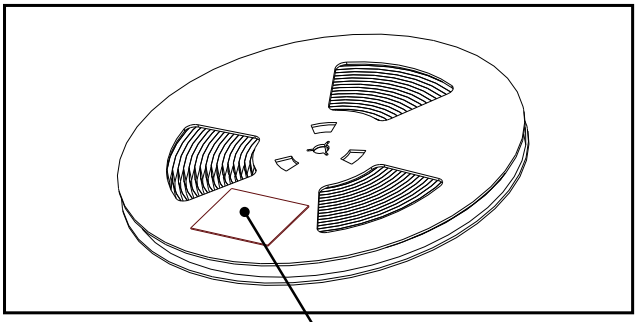

Packaged Reel

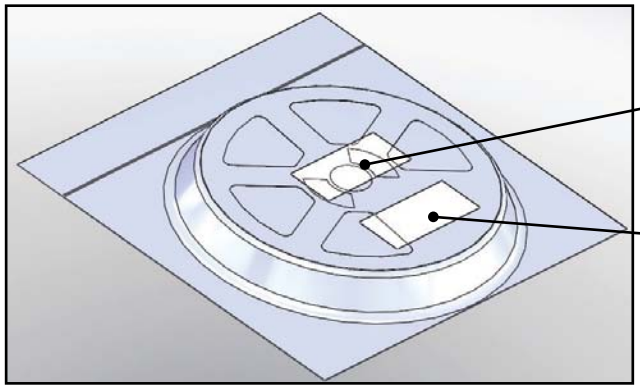

Boxed Reel

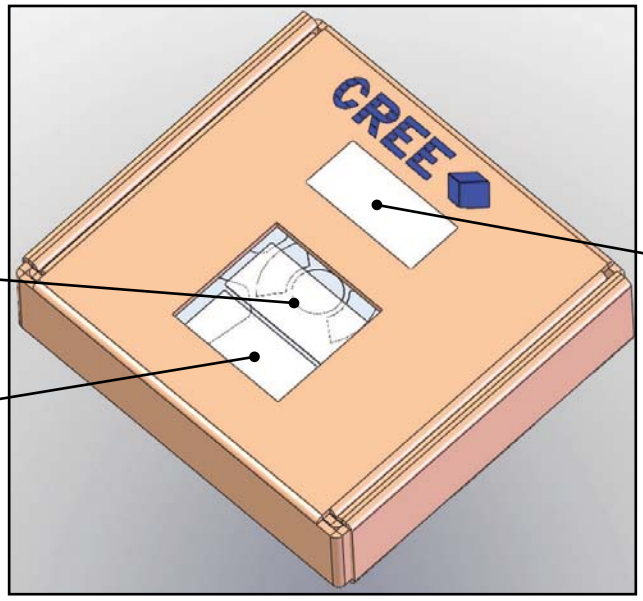

Copyright © 2011-2012 Cree, Inc. All rights reserved. The information in this document is subject to change without notice. Cree®, the Cree logo and XLamp® are registered trademarks of Cree, Inc.

Компания «ЭлектроПласт» предлагает заключение долгосрочных отношений при поставках импортных электронных компонентов на взаимовыгодных условиях!

Наши преимущества:

- Оперативные поставки широкого спектра электронных компонентов отечественного и импортного производства напрямую от производителей и с крупнейших мировых складов;
- Поставка более 17-ти миллионов наименований электронных компонентов;
- Поставка сложных, дефицитных, либо снятых с производства позиций;
- Оперативные сроки поставки под заказ (от 5 рабочих дней);
- Экспресс доставка в любую точку России;
- Техническая поддержка проекта, помощь в подборе аналогов, поставка прототипов;
- Система менеджмента качества сертифицирована по Международному стандарту ISO 9001;
- Лицензия ФСБ на осуществление работ с использованием сведений, составляющих государственную тайну;
- Поставка специализированных компонентов (Xilinx, Altera, Analog Devices, Intersil, Interpoint, Microsemi, Aeroflex, Peregrine, Syfer, Eurofarad, Texas Instrument, Miteq, Cobham, E2V, MA-COM, Hittite, Mini-Circuits,General Dynamics и др.);

Помимо этого, одним из направлений компании «ЭлектроПласт» является направление «Источники питания». Мы предлагаем Вам помощь Конструкторского отдела:

- Подбор оптимального решения, техническое обоснование при выборе компонента;
- Подбор аналогов;
- Консультации по применению компонента;
- Поставка образцов и прототипов;
- Техническая поддержка проекта;
- Защита от снятия компонента с производства.

Как с нами связаться

Телефон: 8 (812) 309 58 32 (многоканальный)
Факс: 8 (812) 320-02-42
Электронная почта: org@eplast1.ru
Адрес: 198099, г. Санкт-Петербург, ул. Калинина, дом 2, корпус 4, литера А.