1.5 A LED Flash Driver with I²C-Compatible Interface

ADP1650

FEATURES

Ultracompact solution
- **Small, 2 mm × 1.5 mm, 12-ball WLCSP package**
- **Thin, 3 mm × 3 mm × 0.75 mm, 10-lead LFCSP package**
- **Smallest footprint, 1 mm height, 1 µH power inductor**
- **LED current source for local LED grounding**
  - **Simplified routing to/from LED**
  - **Improved LED thermals**
- **Synchronous 3 MHz PWM boost converter, no external diode**

High efficiency: 90% peak
- **Reduces high levels of input battery current during flash**
- **Limits battery current drain in torch mode**

I²C programmable
- **Currents up to 1500 mA in flash mode for 1 LED with ±7% accuracy over all conditions**
- **Currents up to 200 mA in torch mode**
- **Programmable dc battery current limit (4 settings)**
- **Programmable flash timer up to 1600 ms**
- **Low VBAT mode to reduce LED current automatically**
- **4-bit ADC for LED V_F, die/LED temperature readback**

Control
- **I²C-compatible control registers**
- **External STROBE and torch input pins**
- **2 transmitter mask (TxMASK) inputs**

Safety
- **Thermal overload protection**
- **Inductor fault detection**
- **LED short-/open-circuit protection**

APPLICATIONS

Camera-enabled cellular phones and smart phones
Digital still cameras, camcorders, and PDAs

FUNCTIONAL BLOCK DIAGRAM

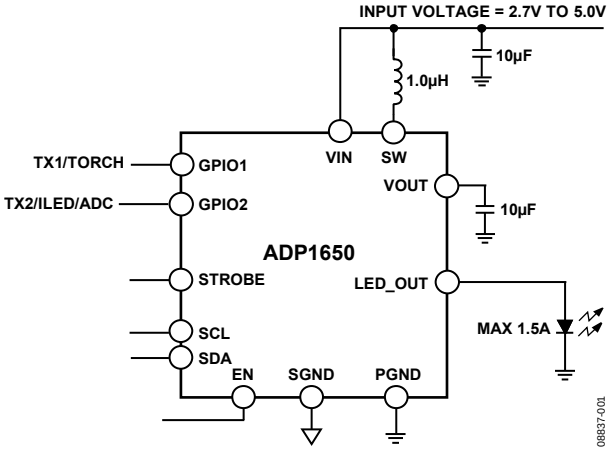

Figure 1.

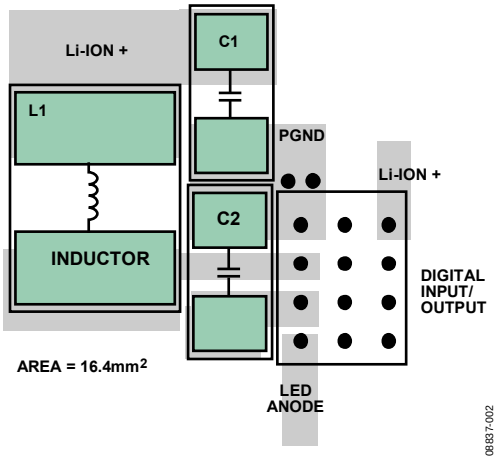

Figure 2. PCB Layout (WLCSP)

GENERAL DESCRIPTION

The ADP1650 is a very compact, highly efficient, single white LED flash driver for high resolution camera phones that improves picture and video quality in low light environments. The device integrates a programmable 1.5 MHz or 3 MHz synchronous inductive boost converter, an I²C-compatible interface, and a 1500 mA current source. The high switching frequency enables the use of a tiny, 1 mm high, low cost, 1 µH power inductor, and the current source permits LED cathode grounding for thermally enhanced, low EMI, and compact layouts.

The LED driver maximizes efficiency over the entire battery voltage range to maximize the input-power-to-LED-power conversion and to minimize battery current draw during flash events. A programmable dc battery current limit safely maximizes LED current for all LED V_F and battery voltage conditions.

Two independent TxMASK inputs permit the flash LED current and battery current to reduce quickly during a power amplifier current burst. The I²C-compatible interface enables the programmability of timers, currents, and status bit readback for operation monitoring and safety control.

The ADP1650 is available in a compact 12-ball, 0.5 mm pitch WLCSP package and a 10-lead LFCSP package, and operates within specification over the full −40°C to +125°C junction temperature range.

Rev. C
Information furnished by Analog Devices is believed to be accurate and reliable. However, no responsibility is assumed by Analog Devices for its use, nor for any infringements of patents or other rights of third parties that may result from its use. Specifications subject to change without notice. No license is granted by implication or otherwise under any patent or patent rights of Analog Devices. Trademarks and registered trademarks are the property of their respective owners.

One Technology Way, P.O. Box 9106, Norwood, MA 02062-9106, U.S.A.
Tel: 781.329.4700 **www.analog.com**
Fax: 781.461.3113 **©2010–2011 Analog Devices, Inc. All rights reserved.**

TABLE OF CONTENTS

Features ... 1
Applications ... 1
Functional Block Diagram ... 1
General Description ... 1
Revision History ... 2
Specifications ... 3
  Recommended Specifications: Input and Output Capacitance and Inductance ... 5
  I²C-Compatible Interface Timing Specifications ... 5
Absolute Maximum Ratings ... 6
  Thermal Data ... 6
  Thermal Resistance ... 6
  ESD Caution ... 6
Pin Configurations and Function Descriptions ... 7
Typical Performance Characteristics ... 8
Theory of Operation ... 12
  White LED Driver ... 12
  Modes of Operation ... 12
  Assist Light ... 13
  Flash Mode ... 13
  Assist-to-Flash Operation ... 13
  Torch Mode ... 13
  Torch-to-Flash Mode ... 14
  TxMASK Operation ... 14
  Frequency Foldback ... 14
  Indicator LED Driver ... 14
  Low Battery LED Current Foldback ... 14
  Programmable Battery DC Current Limit ... 15
  Analog-to-Digital Converter Operation ... 15
  5 V Output Operation ... 16
Safety Features ... 18
  Short-Circuit Fault ... 18
  Overvoltage Fault ... 18
  Dynamic Overvoltage Mode (DOVP) ... 18
  Timeout Fault ... 18
  Overtemperature Fault ... 18
  Indicator LED Fault ... 18
  Current Limit ... 18
  Input Undervoltage ... 18
  Soft Start ... 18
  Reset Using the Enable (EN) Pin ... 18
  Clearing Faults ... 18
  I²C Interface ... 19
I²C Register Map ... 20
Applications Information ... 26
  External Component Selection ... 26
PCB Layout ... 28
Outline Dimensions ... 29
  Ordering Guide ... 29

REVISION HISTORY

4/11—Rev. B to Rev. C

Added 10-Lead LFCSP Package ... Universal
Changes to Features Section, General Description Section, and Figure 2 Caption ... 1
Changes to Table 1 ... 3
Changes to Table 5 ... 6
Added Figure 5; Renumbered Sequentially ... 7
Changes to Table 6 ... 7
Changes to PCB Layout Section and Figure 45 Caption ... 28
Added Figure 46 ... 28
Updated Outline Dimensions ... 29
Changes to Ordering Guide ... 29

2/11—Rev. A to Rev. B

Changes to Features Section and General Description Section . 1
Changes to Switching Regulator, Voltage Output Mode, VOUT Voltage Parameter and Digital Inputs/GPIO, Torch Glitch Filtering Delay Parameter, Table 1 ... 3
Changed GND to Power Ground Throughout ... 6
Changed IL to I_L, ILED to I_{LED}, LED OUT to LED_OUT, and IBAT to I_{BAT} Throughout ... 8
Change to Figure 10 Caption ... 8
Change to Figure 11 Caption ... 9
Changed LED_MOD = 10 to LED_MOD = 11 in Figure 32 ... 14
Changes to Analog-to-Digital Converter Operation Section and Figure 37 ... 15
Changes to Selecting the Output Capacitor Section ... 26

6/10—Rev. 0 to Rev. A

Changes to Contact Information ... 1

5/10—Revision 0: Initial Version

SPECIFICATIONS

V_{IN}[1] = 3.6 V, T_J = −40°C to +125°C for minimum/maximum specifications, and T_A = 25°C for typical specifications, unless otherwise noted.

Table 1.

Parameter[2]	Conditions	Min	Typ	Max	Unit
SUPPLY					
Input Voltage Range		2.7		5.0	V
Undervoltage Lockout Threshold	V_{IN} falling	2.3	2.4	2.5	V
Undervoltage Lockout Hysteresis		50	100	150	mV
Shutdown Current (I_Q), EN = 0 V	T_J = −40°C to +85°C, current into VIN pin, V_{IN} = 2.7 V to 4.5 V		0.2	1	µA
Standby Current (I_{STBY}), EN = 1.8 V	T_J = −40°C to +85°C, current into VIN pin, V_{IN} = 2.7 V to 4.5 V		3	10	µA
Operating Quiescent Current	Torch mode, LED current = 100 mA		5.3		mA
SW Switch Leakage	T_J = −40°C to +85°C, V_{SW}[3] = 4.5 V			2	µA
	T_J = 25°C, V_{SW}[3] = 4.5 V			0.5	µA
LED DRIVER					
LED Current					
Assist Light, Torch	Assist light value setting = 0 (000 binary)		25		mA
	Assist light value setting = 7 (111 binary)		200		mA
Flash	Flash value setting = 0 (00000 binary)		300		mA
	Flash value setting = 24 (11000 binary)		1500		mA
LED Current Error—WLCSP	I_{LED} = 700 mA to 1100 mA	−6		+6	%
	I_{LED} = 300 mA to 650 mA, 1150 mA to 1500 mA	−7		+7	%
	I_{LED} = 75 mA to 200 mA	−10		+10	%
	I_{LED} = 25 mA to 50 mA	−15		+15	%
LED Current Error—LFCSP	I_{LED} = 700 mA to 1100 mA	−6		+6	%
	I_{LED} = 300 mA to 650 mA, 1150 mA to 1500 mA	−7		+7	%
	I_{LED} = 75 mA to 200 mA	−10		+10	%
	I_{LED} = 25 mA to 50 mA	−15		+18	%
LED Current Source Headroom—WLCSP	Flash, 1200 mA LED current		290		mV
	Torch, 200 mA LED current		190		mV
LED Current Source Headroom—LFCSP	Flash, 1200 mA LED current		370		mV
	Torch, 200 mA LED current		220		mV
LED_OUT Ramp-Up Time				0.6	ms
LED_OUT Ramp-Down Time				0.1	ms
SWITCHING REGULATOR					
Switching Frequency	Switching frequency = 3 MHz	2.8	3	3.2	MHz
	Switching frequency = 1.5 MHz	1.4	1.5	1.6	MHz
Minimum Duty Cycle	Switching frequency = 3 MHz		14		%
	Switching frequency = 1.5 MHz		7		%
nFET Resistance—WLCSP			60		mΩ
pFET Resistance—WLCSP			50		mΩ
nFET Resistance—LFCSP			77		mΩ
pFET Resistance—LFCSP			85		mΩ
Voltage Output Mode					
VOUT Voltage—WLCSP		4.575	5.000	5.425	V
VOUT Voltage—LFCSP		4.575	5.000	5.500	V
Output Current				500	mA
Line Regulation	I_{LOAD} at VOUT = 300 mA		0.3		%/V
Load Regulation			−0.7		%/A

Parameter[2]	Conditions	Min	Typ	Max	Unit
Pass-Through Mode Transition, Flash					
VIN to LED_OUT, Entry	1200 mA LED current		580		mV
VIN to LED_OUT, Exit	1200 mA LED current		435		mV
Pass-Through Mode Transition, Torch					
VIN to LED_OUT, Entry	200 mA LED current		380		mV
VIN to LED_OUT, Exit	200 mA LED current		285		mV
DIGITAL INPUTS/GPIO					
Input Logic Low Voltage				0.54	V
Input Logic High Voltage		1.26			V
GPIO1, GPIO2, STROBE Pull-Down			390		kΩ
Torch Glitch Filtering Delay	From torch rising edge to device start	5.5	7	7.5	ms
INDICATOR LED					
LED Current Accuracy		−22		+22	%
Short-Circuit Detection Threshold				1.2	V
Open-Circuit Detection Threshold		2.45			V
ADC					
Resolution		4			Bits
Error	External voltage mode		0	±1	LSB
	V_F mode, T_J = 25°C			±1	LSB
	V_F mode, T_J = −40°C to +125°C			±1.5	LSB
Input Voltage Range, GPIO2	External voltage mode	0		0. 5	V
SAFETY FEATURES					
Maximum Timeout For Flash			1600		ms
Timer Accuracy		−7.0		+7.0	%
DC Current Limit	DC current value setting = 0 (00 binary)	1.35	1.5	1.65	A
	DC current value setting = 1 (01 binary)	1.55	1.75	1.95	A
	DC current value setting = 2 (10 binary)	1.8	2.0	2.2	A
	DC current value setting = 3 (11 binary)	2.02	2.25	2.5	A
Low VBAT Mode Transition Voltage					
Error				3.2	%
Hysteresis			50		mV
Coil Peak Current Limit	Peak current value setting = 0 (00 binary)	1.55	1.75	1.95	A
	Peak current value setting = 1 (01 binary)	2.02	2.25	2.5	A
	Peak current value setting = 2 (10 binary)	2.47	2.75	3.0	A
	Peak current value setting = 3 (11 binary)	2.7	3.0	3.3	A
Overvoltage Detection Threshold		5.15	5.5	5.9	V
LED_OUT Short-Circuit Detection Comparator Reference Voltage			1.2	1.3	V
Thermal Shutdown Threshold					
T_J Rising			150		°C
T_J Falling			140		°C

[1] V_{IN} is the input voltage to the circuit.
[2] All limits at temperature extremes are guaranteed via correlation using standard statistical quality control (SQC).
[3] V_{SW} is the voltage on the SW switch pin.

RECOMMENDED SPECIFICATIONS: INPUT AND OUTPUT CAPACITANCE AND INDUCTANCE

Table 2.

Parameter	Symbol	Conditions	Min	Typ	Max	Unit
CAPACITANCE	C_{MIN}					
Input		T_A = −40°C to +125°C	4.0	10		µF
Output		T_A = −40°C to +125°C	3.0	10	20	µF
MINIMUM AND MAXIMUM INDUCTANCE	L	T_A = −40°C to +125°C	0.6	1.0	1.5	µH

I²C-COMPATIBLE INTERFACE TIMING SPECIFICATIONS

Table 3.

Parameter[1]	Min	Max	Unit	Description
f_{SCL}		400	kHz	SCL clock frequency
t_{HIGH}	0.6		µs	SCL high time
t_{LOW}	1.3		µs	SCL low time
$t_{SU, DAT}$	100		ns	Data setup time
$t_{HD, DAT}$	0	0.9	µs	Data hold time
$t_{SU, STA}$	0.6		µs	Setup time for repeated start
$t_{HD, STA}$	0.6		µs	Hold time for start/repeated start
t_{BUF}	1.3		µs	Bus free time between a stop and a start condition
$t_{SU, STO}$	0.6		µs	Setup time for stop condition
t_R	20 + 0.1 C_B[2]	300	ns	Rise time of SCL and SDA
t_F	20 + 0.1 C_B[2]	300	ns	Fall time of SCL and SDA
t_{SP}	0	50	ns	Pulse width of suppressed spike
C_B[2]		400	pF	Capacitive load for each bus line

[1] Guaranteed by design.
[2] C_B is the total capacitance of one bus line in picofarads.

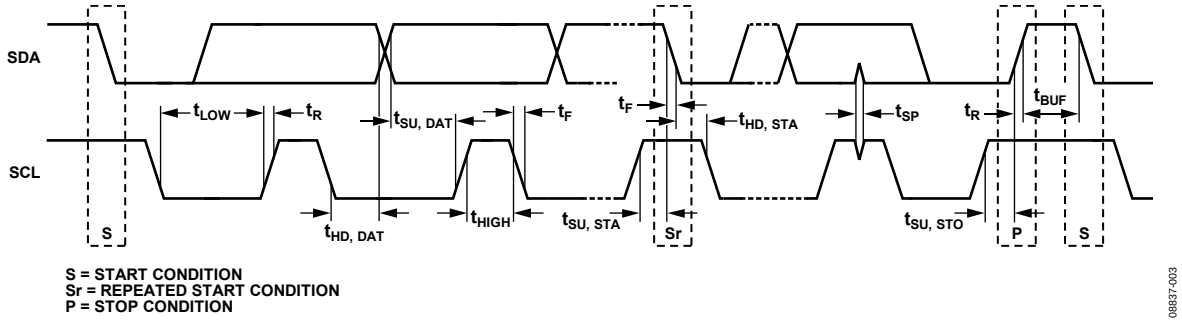

Figure 3. I²C-Compatible Interface Timing Diagram

ABSOLUTE MAXIMUM RATINGS

Table 4.

Parameter	Rating
VIN, SDA, SCL, EN, GPIO1, GPIO2, STROBE, LED_OUT, SW, VOUT to Power Ground	−0.3 V to +6 V
PGND to SGND	−0.3 V to +0.3 V
Ambient Temperature Range (T_A)	−40°C to +85°C
Junction Temperature Range (T_J)	−40°C to +125°C
Storage Temperature	JEDEC J-STD-020
ESD Human Body Model	±2000 V
ESD Charged Device Model	±500 V
ESD Machine Model	±150 V

Stresses above those listed under Absolute Maximum Ratings may cause permanent damage to the device. This is a stress rating only; functional operation of the device at these or any other conditions above those indicated in the operational section of this specification is not implied. Exposure to absolute maximum rating conditions for extended periods may affect device reliability.

THERMAL DATA

The ADP1650 may be damaged if the junction temperature limits are exceeded. Monitoring T_A does not guarantee that T_J is within the specified temperature limits. In applications with high power dissipation and poor thermal resistance, the maximum T_A may have to be derated. In applications with moderate power dissipation and low PCB thermal resistance, the maximum T_A can exceed the maximum limit as long as the T_J is within specification limits. T_J of the device is dependent on the T_A, the power dissipation (PD) of the device, and the junction-to-ambient thermal resistance (θ_{JA}) of the package. Maximum T_J is calculated from the T_A and PD using the following formula:

$$T_J = T_A + (PD \times \theta_{JA})$$

THERMAL RESISTANCE

θ_{JA} of the package is based on modeling and calculation using a 4-layer board. θ_{JA} is highly dependent on the application and board layout. In applications where high maximum power dissipation exists, attention to thermal board design is required. The value of θ_{JA} may vary, depending on PCB material, layout, and environmental conditions. The specified value of θ_{JA} is based on a 4-layer, 4 in × 3 in, 2 ½ oz copper board, per JEDEC standards. For more information, see the AN-617 Application Note, *MicroCSP™ Wafer Level Chip Scale Package.*

θ_{JA} is specified for a device mounted on a JEDEC 2S2P PCB.

Table 5. Thermal Resistance

Package Type	θ_{JA}	Unit
12-Ball WLCSP	75	°C/W
10-Lead LFCSP	42.5	°C/W

ESD CAUTION

ESD (electrostatic discharge) sensitive device. Charged devices and circuit boards can discharge without detection. Although this product features patented or proprietary protection circuitry, damage may occur on devices subjected to high energy ESD. Therefore, proper ESD precautions should be taken to avoid performance degradation or loss of functionality.

PIN CONFIGURATIONS AND FUNCTION DESCRIPTIONS

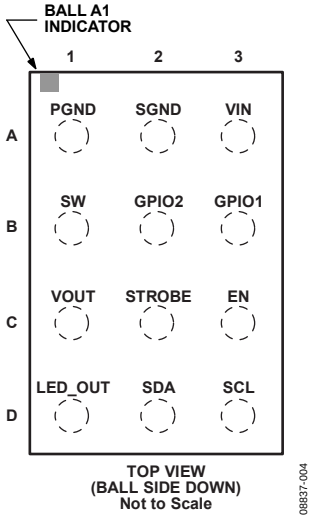

Figure 4. WLCSP Pin Configuration

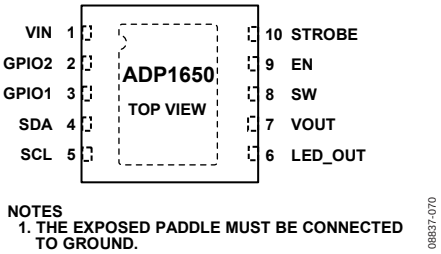

Figure 5. LFCSP Pin Configuration

Table 6. Pin Function Descriptions

Pin No.			
WLCSP	**LFCSP**	**Mnemonic**	**Description**
A1	N/A[1]	PGND	Power Ground.
A2	N/A[1]	SGND	Signal Ground.
A3	1	VIN	Input Voltage for the Device. Connect an input bypass capacitor close to this pin.
B1	8	SW	Boost Switch. Connect the power inductor between SW and the input capacitor.
B2	2	GPIO2	ILED/TX2/ADC. Mode is register selectable. Red indicator LED current source or TxMASK2 or ADC input. ILED Mode. Connect to red LED anode. Connect the LED cathode to power ground. TxMASK2 Mode. Reduces the current to the programmable TxMASK2 current. ADC Mode. This pin is used as the input pin for the ADC.
B3	3	GPIO1	Torch/TX1. Mode is register selectable. External torch mode or TxMASK1 input. Torch Mode. Enables the integrated circuit (IC) in direct torch mode. TxMASK1 Mode. Reduces the flash current to the programmable TxMASK1 current.
C1	7	VOUT	Boost Output. Connect an output bypass capacitor very close to this pin. This is the output for the 5 V external voltage mode.
C2	10	STROBE	Strobe Signal Input. This pin synchronizes the flash pulse to the image capture. In most cases, this signal comes directly from the image sensor.
C3	9	EN	Enable. Set EN low to bring the quiescent current (I_Q) to <1 µA. Registers are set to their defaults when EN is brought from low to high.
D1	6	LED_OUT	LED Current Source. Connect this pin to the anode of the flash LED.
D2	4	SDA	I^2C Data Signal in I^2C Mode.
D3	5	SCL	I^2C Clock Signal in I^2C Mode.
	0	EPAD	Exposed Pad. Connect the exposed pad to the ground plane for the LFCSP version.

[1] N/A means not applicable.

TYPICAL PERFORMANCE CHARACTERISTICS

I_L = inductor current, I_{LED} = LED current, LED_OUT = LED output, I_{BAT} = battery current.

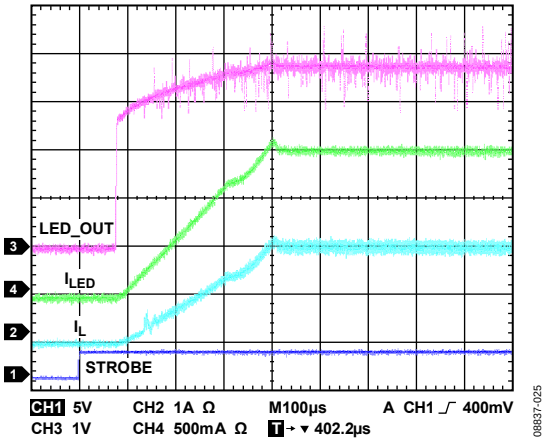

Figure 6. Startup Flash Mode, V_{IN} = 3.6 V, I_{LED} = 1500 mA

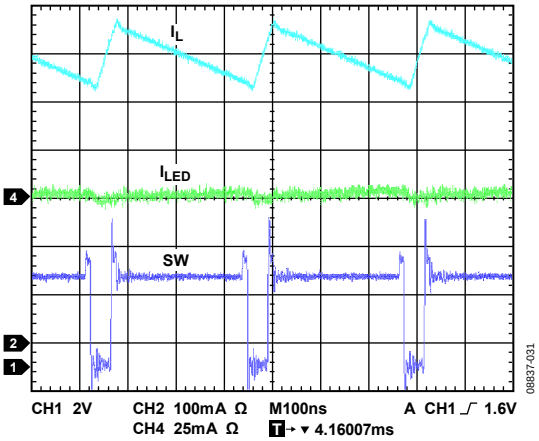

Figure 9. Switching Waveforms, Flash Mode, I_{LED} = 1500 mA

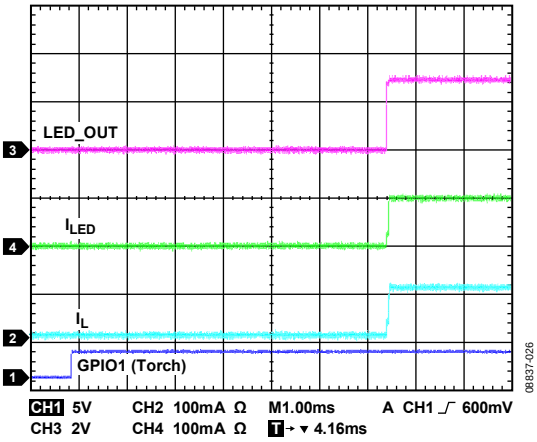

Figure 7. Startup Torch Mode, V_{IN} = 3.6 V, I_{LED} = 100 mA

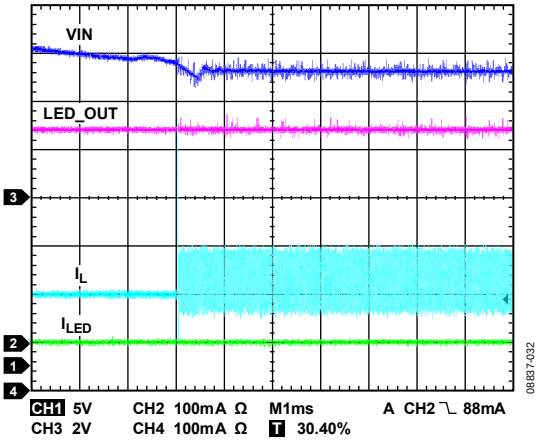

Figure 10. Pass-Through to Boost Mode Transition, I_{LED} = 100 mA

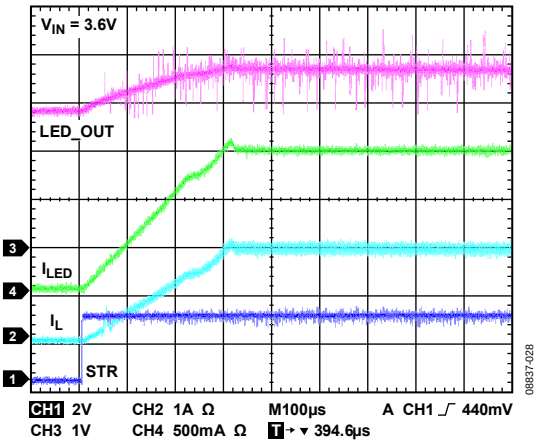

Figure 8. 100 mA Torch to 1500 mA Flash Transition

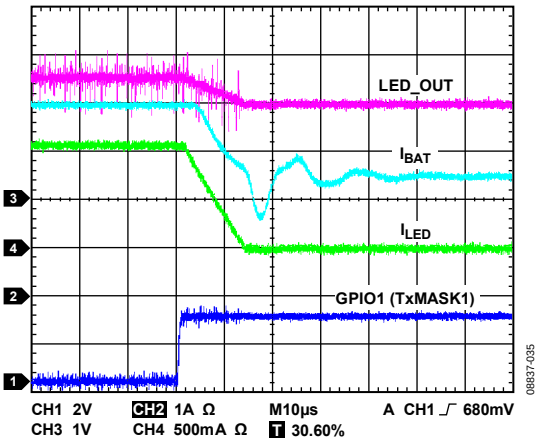

Figure 11. Entry into TxMASK1 Mode

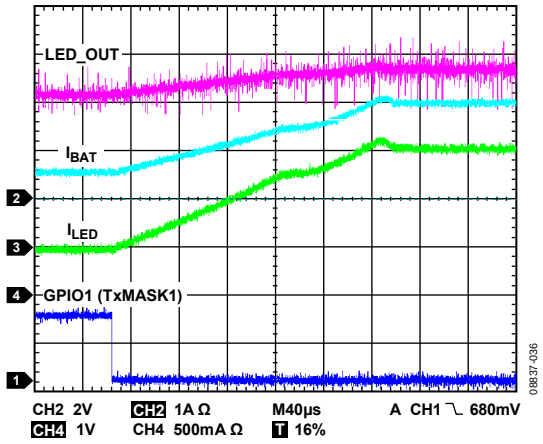

Figure 12. Exit from TxMASK1 Mode

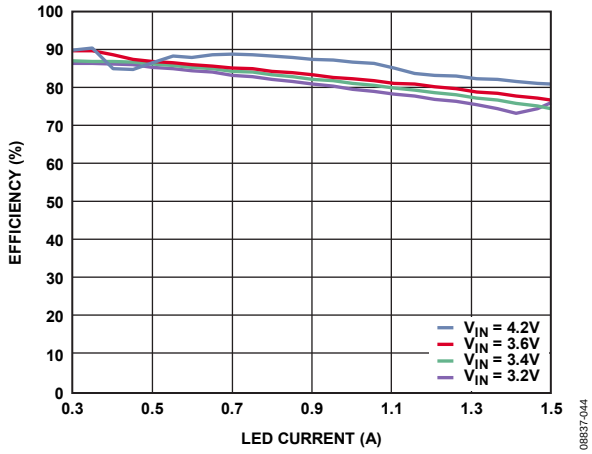

Figure 15. Flash Mode Efficiency vs. LED Current

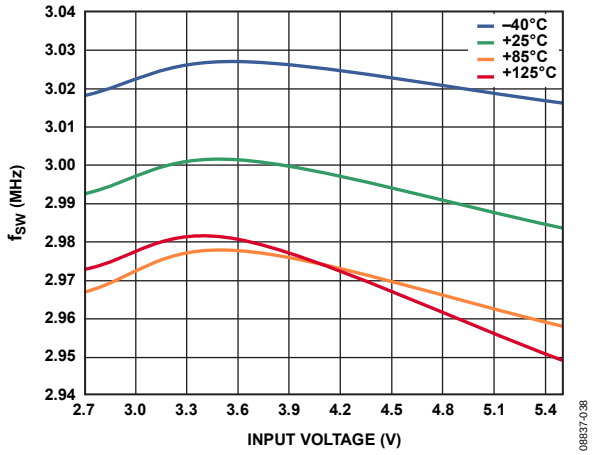

Figure 13. Switching Frequency vs. Supply Voltage (3 MHz Mode)

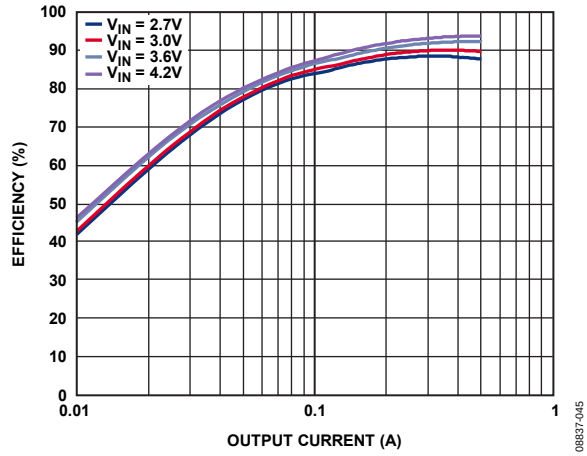

Figure 16. Voltage Regulation Mode Efficiency vs. Load Current

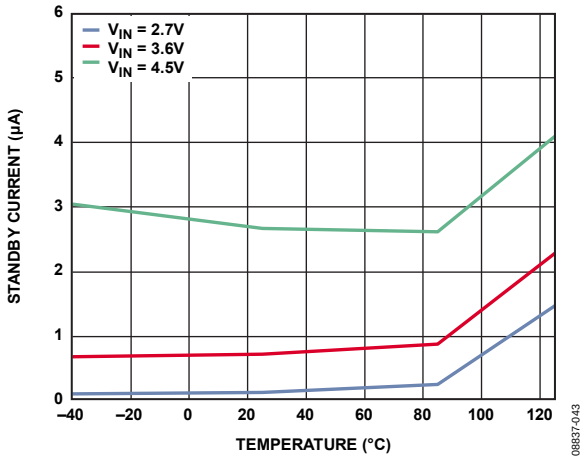

Figure 14. Standby Current vs. Temperature

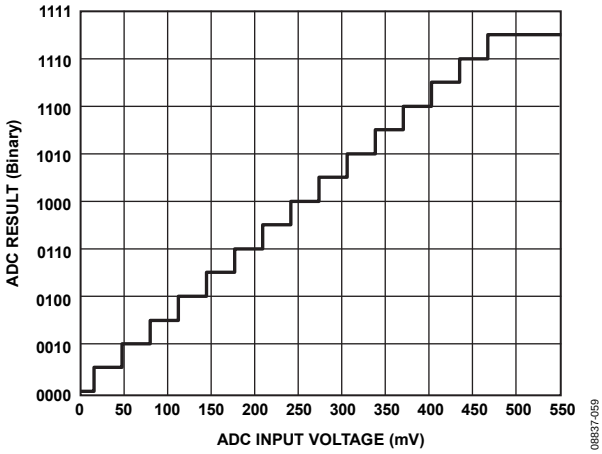

Figure 17. ADC External Voltage Mode Transfer Characteristic

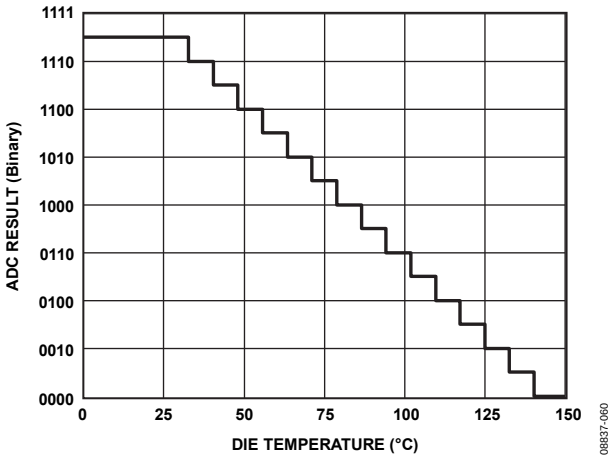

Figure 18. ADC Die Temperature Mode Transfer Characteristic

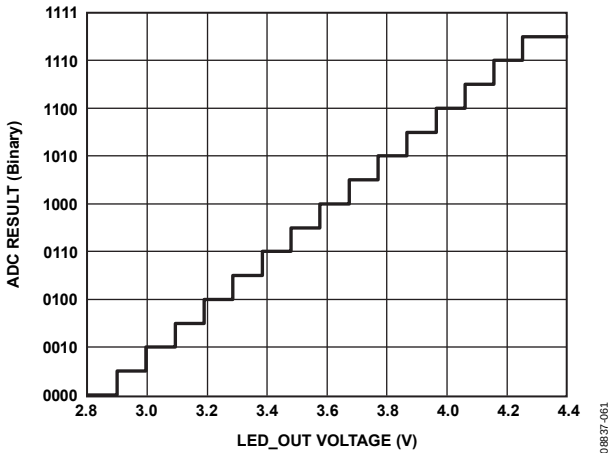

Figure 19. ADC LED V_F Mode Transfer Characteristic

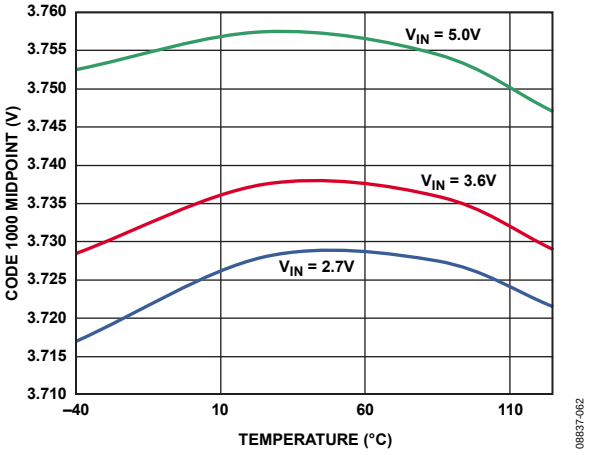

Figure 20. ADC LED V_F Mode, Code 1000, Midpoint vs. Temperature

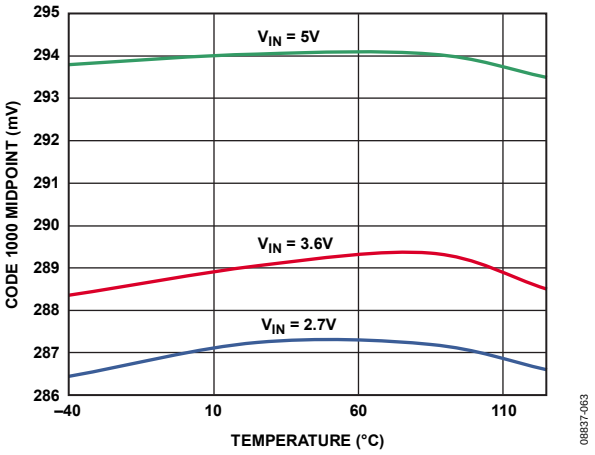

Figure 21. ADC External Voltage Mode, Code 1000, Midpoint vs. Temperature

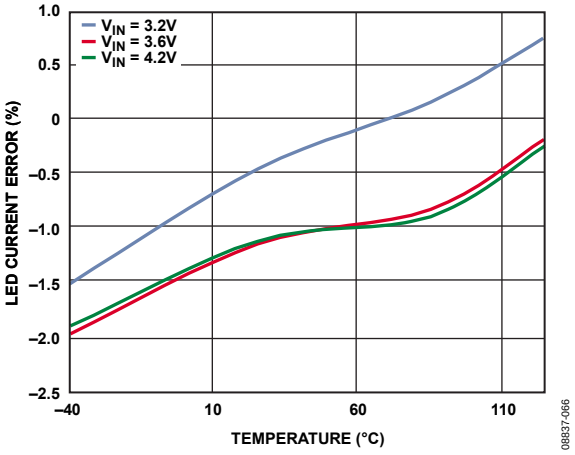

Figure 22. LED Current Accuracy vs. Temperature, I_{LED} = 1200 mA

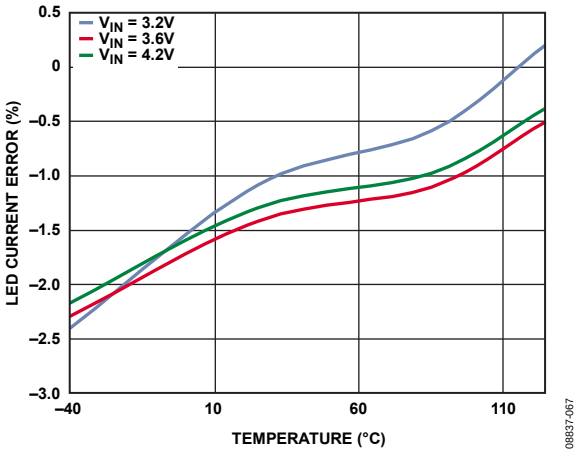

Figure 23. LED Current Accuracy vs. Temperature, I_{LED} = 800 mA

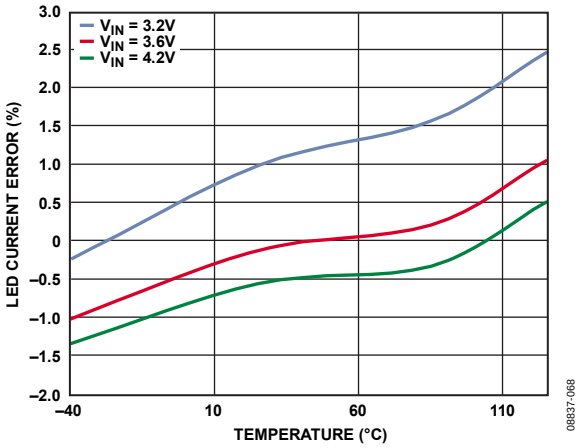

Figure 24. LED Current Error vs. Temperature, I_{LED} = 1500 mA

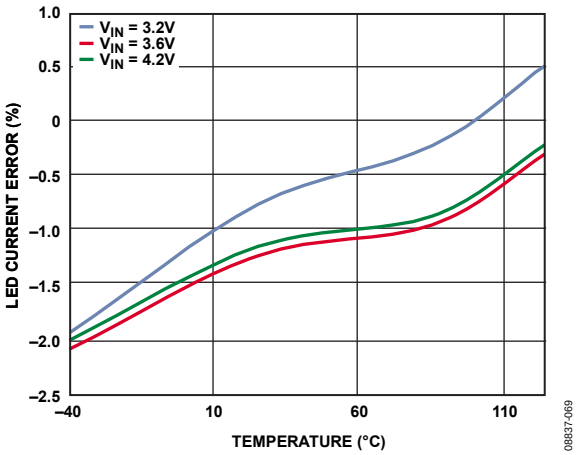

Figure 25. LED Current Error vs. Temperature, I_{LED} = 1000 mA

THEORY OF OPERATION

The ADP1650 is a high power, I²C programmable white LED driver ideal for driving white LEDs for use as a camera flash. The ADP1650 includes a boost converter and a current regulator suitable for powering one high power white LED.

WHITE LED DRIVER

The ADP1650 drives a synchronous 3 MHz boost converter as required to power the high power LED. If the sum of the LED forward voltage and current regulator voltage is higher than the battery voltage, the boost turns on. If the battery voltage is higher than the sum of the LED V_F and current regulator voltage, the boost is disabled and the part operates in pass-through mode. The ADP1650 uses an integrated PFET high-side current regulator for accurate brightness control.

MODES OF OPERATION

Once the enable pin is high, the device can be set into the four modes of operation using the LED_MOD bits in Register 0x04, via the I²C-compatible interface.

LED_MOD = [00] sets the device in standby mode, consuming 3 µA (typical).

LED_MOD = [01] sets the device in fixed VOUT = 5 V output mode.

LED_MOD = [10] sets the device in assist light mode with continuous LED current.

LED_MOD = [11] sets the device in flash mode with current up to 1.5 A available for up to 1.6 sec.

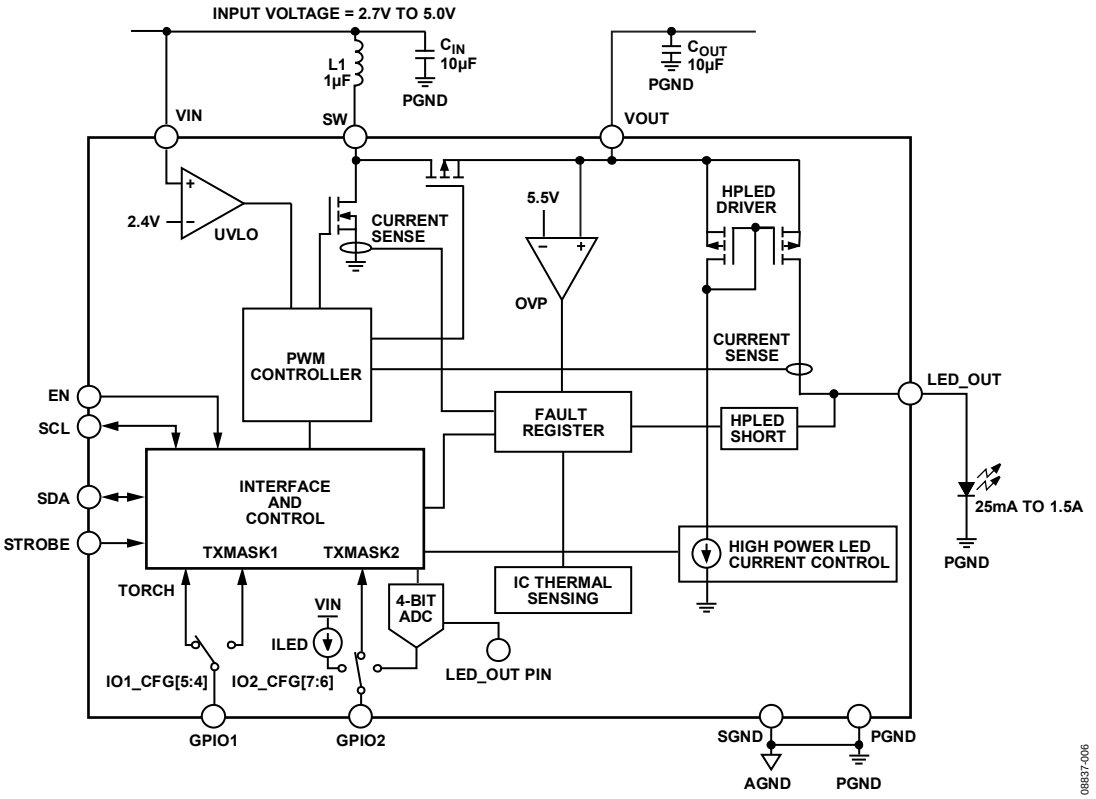

Figure 26. Detailed Block Diagram

ASSIST LIGHT

The assist light provides continuous current programmable from 25 mA to 200 mA. Set the assist light current using the I_TOR bits (in Register 0x03). To enable assist, set LED_MOD to assist light mode and set OUTPUT_EN = 1 (in Register 0x04). Disable assist light mode by setting LED_MOD to standby mode or setting OUTPUT_EN = 0.

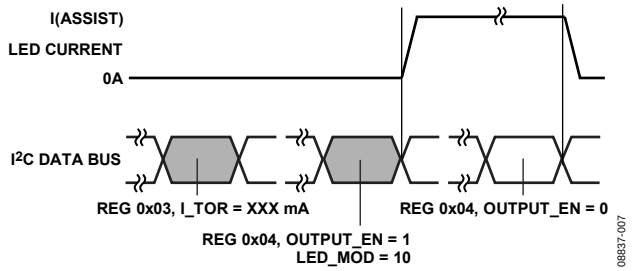

Figure 27. Enabling Assist Light Mode

FLASH MODE

Flash mode provides 300 mA to 1.5 A for a programmable time of up to 1.6 seconds. Set the flash current using the I_FL bits (in Register 0x03) and the maximum flash duration with the FL_TIM bits (in Register 0x02). To enable flash mode, set LED_MOD to flash mode and set OUTPUT_EN = 1. Enable flash without STROBE by setting STR_MODE (in Register 0x04) to 0 (software strobe). When STR_MODE is in hardware strobe mode, setting the STROBE pin high enables flash and synchronizes it to the image sensor. Hardware strobe mode has two modes for timeout: level sensitive and edge sensitive.

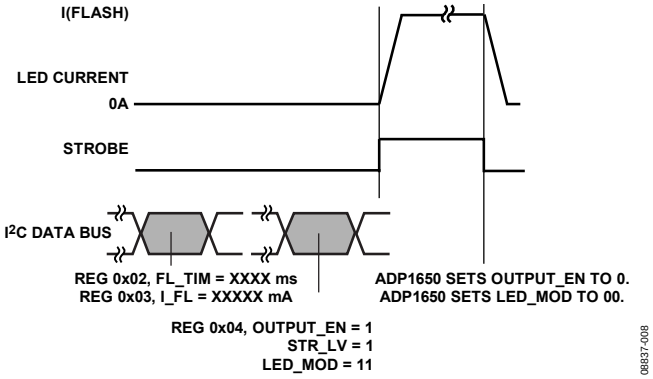

Figure 28. Flash Operation: Level-Sensitive Mode

In level-sensitive mode, the duration of STROBE high sets the duration of the flash up to the maximum time set by the FL_TIM timeout. If STROBE is kept high longer than the duration set by FL_TIM, a timeout fault disables the flash.

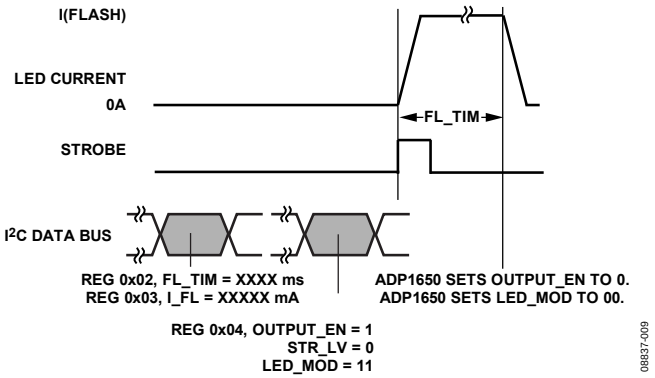

Figure 29. Flash Operation: Edge-Sensitive Mode

In edge-sensitive mode, a positive edge on the STROBE pin enables the flash, and the FL_TIM bits set the flash duration.

ASSIST-TO-FLASH OPERATION

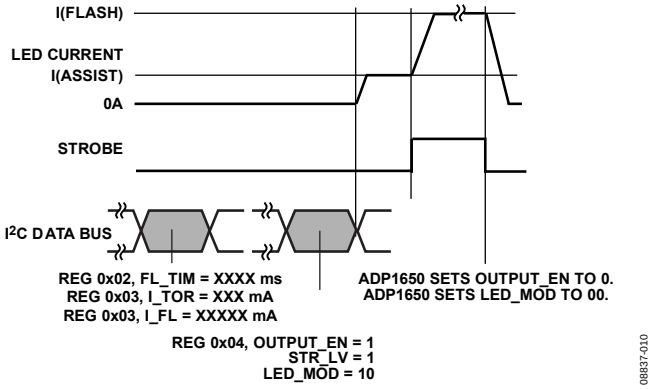

Figure 30. Enabling Assist to Flash (Level-Sensitive) Mode

The STR_POL bit in Register 0x07 changes the default enable of STROBE from low to high to high to low. Additional image sensor-specific assist/flash enable modes are included in the device, and information on these is available on request from the Analog Devices, Inc., sales team.

TORCH MODE

Set the assist/torch light current using the I_TOR bits. To enable torch mode using a logic signal, set LED_MOD to standby mode and OUTPUT_EN = 1, and then bring GPIO1 high. Disable external torch mode by setting GPIO1 low or programming OUTPUT_EN = 0. Bringing GPIO1 low during torch mode automatically sets OUTPUT_EN = 0. To enable torch mode again, program OUTPUT_EN = 1, and bring GPIO high again.

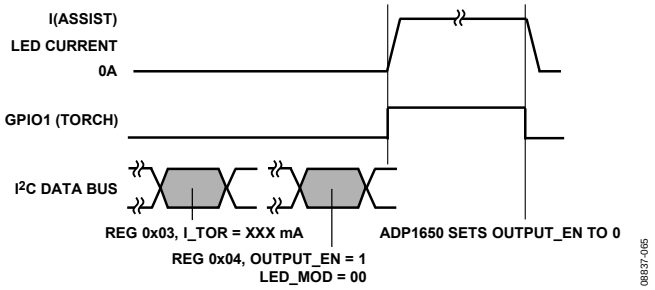

Figure 31. Enabling External Torch Mode Using GPIO1

TORCH-TO-FLASH MODE

The driver can move directly from external torch mode (using GPIO1) to flash mode by bringing STROBE high before GPIO1 = torch is brought low. Bringing torch low before STROBE goes high prevents the flash from firing when STROBE goes high.

The ADP1650 returns to standby mode after a successful flash and sets OUTPUT_EN = 0.

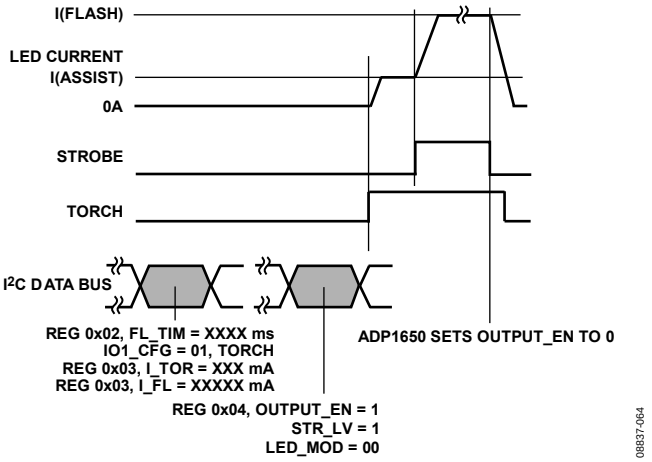

Figure 32. Enabling Flash Mode from External Torch Mode

TxMASK OPERATION

When the ADP1650 is in flash mode, the TxMASK1 and TxMASK2 functions reduce the battery load in response to the system enabling a power amplifier. The device remains in flash mode, but the LED driver output current reduces to the programmed TxMASK light level in less than 21 µs.

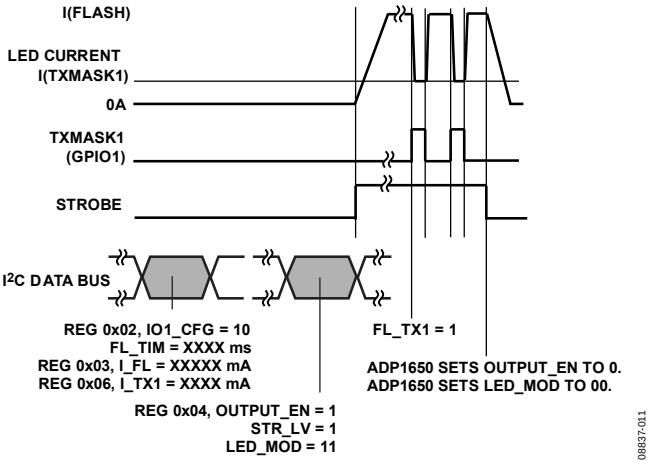

Figure 33. TxMASK1 Operation During Flash (Level-Sensitive) Mode

The device selects the TxMASK1 or TxMASK2 current level based on whether the TxMASK1 or TxMASK2 input is used. After a TxMASK1 or TxMASK2 occurs, a flag is set in the fault information register. When the TxMASK signal goes low again, the LED current goes back to the full flash level in a controlled manner to avoid overshoots on the battery current. If both TxMASK inputs are set high simultaneously, the TXMASK1 current level is used.

FREQUENCY FOLDBACK

Frequency foldback is an optional mode that optimizes efficiency by reducing the switching frequency to 1.5 MHz when VIN is slightly less than VOUT. Enable frequency foldback by setting FREQ_FB = 1 in Register 0x04.

INDICATOR LED DRIVER

The indicator LED driver on GPIO2 provides a programmable current source of between 2.75 mA and 11 mA for driving a red privacy LED. The current level is programmed by the I_ILED bits in Register 0x07. The circuit consists of a programmable current source and a monitoring circuit that uses comparators to determine whether the indicator LED is shorted or open. The threshold for detection of a short is 1.2 V (maximum) and an open circuit is 2.45 V (minimum). The indicator LED must not be used at the same time as a flash or assist/torch event.

LOW BATTERY LED CURRENT FOLDBACK

As the battery discharges, the lower battery voltage results in higher peak currents through the battery ESR, which may cause early shutdown of the phone. The ADP1650 features an optional low battery detection option, which reduces the flash current (to a programmable level) when the battery voltage falls below a programmable level.

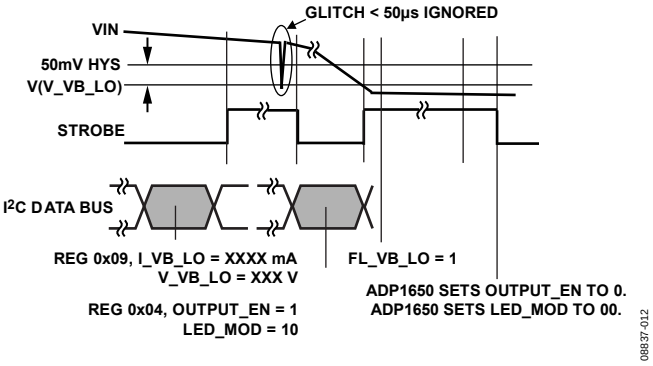

Figure 34. Register 0x09 Sets the Battery Voltage Threshold Level and the Reduced LED Current Level

Table 7. VDD Level at Which the VBAT Low Function Is Enabled

Bit Name	VDD Level
V_VB_LO	000 = disabled (default)
	001 = 3.3 V
	010 = 3.35 V
	011 = 3.4 V
	100 = 3.45 V
	101 = 3.5 V
	110 = 3.55 V
	111 = 3.6 V

Set V_VB_LO = 000 to disable the low battery current foldback.

PROGRAMMABLE BATTERY DC CURRENT LIMIT

The ADP1650 has four optional programmable input dc current limits that limit the maximum battery current that can be taken over all conditions. This allows higher LED currents to be used in a system with significant variation in LED forward voltage (V_F) and supply battery voltage without risk of the current allocated to the flash being exceeded.

Table 8. Input DC Current Limit Setting the LED Current

Bit Name	Current Limit
IL_DC	00 = 1.5 A 01 = 1.75 A 10 = 2.0 A (default) 11 = 2.25 A

During startup of the flash, if the battery current does not reach the dc current limit, the LED current is set to the current value of the I_FL bits. If the battery current does hit the programmed dc current limit on startup, the LED current does not increase further. The dc current limit flag is set in the fault information register. The I_FL bits in Register 0x03 are set to the actual LED current and are available for readback.

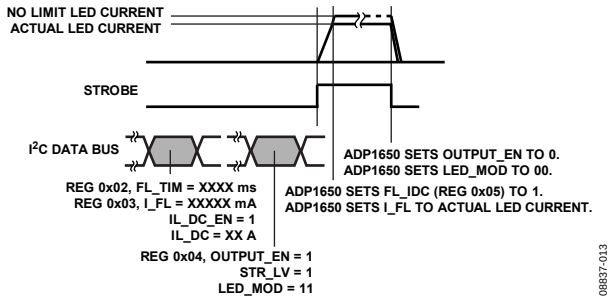

Figure 35. DC Current Limit Operation in a Low Battery, High LED V_F Case

The camera system shown in Figure 36 can adjust the image sensor settings based on the known reduced LED current for a low battery and a high V_F LED.

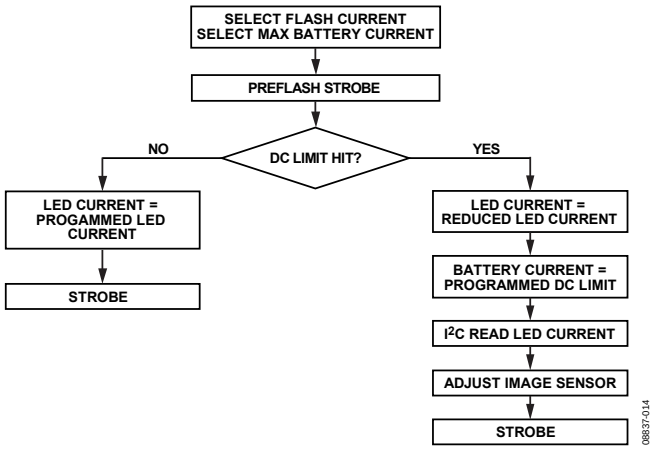

Figure 36. Use of the DC Current Limit in an Optimized Camera System

ANALOG-TO-DIGITAL CONVERTER OPERATION

The internal 4-bit analog-to-digital converter (ADC) is configurable to measure the LED V_F, integrated circuit (IC) die temperature, or an external voltage using the GPIO2 pin. Read the 4-bit resolution output code back from Register 0x08 using the I²C interface.

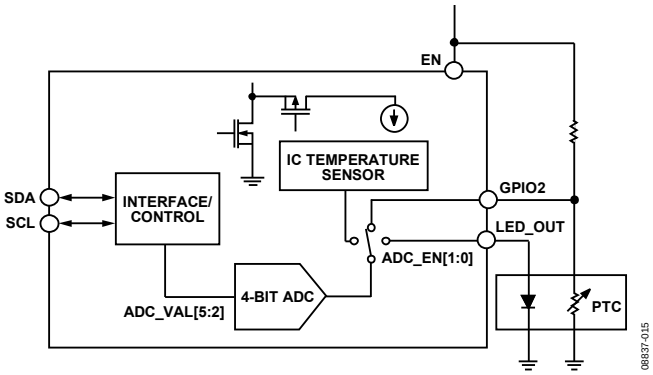

Figure 37. Available ADC Modes in the ADP1650

The ADC can perform the conversion either immediately on an I²C command, or it can delay the conversion until the next time the ADP1650 exits an active mode. Delayed conversion can be useful, for example, for measuring the IC temperature at the end of a timed flash period. To set up a delayed conversion, set ADC_EN to the required mode while OUTPUT_EN = 0. Then set the ADP1650 to the desired output mode (torch, flash assist light, or 5 V output) and set OUTPUT_EN = 1. The ADC conversion is performed when the ADP1650 exits the chosen mode.

To perform an immediate conversion, set ADC_EN to the required mode during ADP1650 operation (OUTPUT_EN = 1).

Note that an ADC conversion cannot be performed when the ADP1650 is idle. This is interpreted as an attempt to set up a delayed conversion.

LED V_F Mode

The ADC can measure the LED V_F in both flash and assist/torch modes. In torch mode, set ADC_EN = 01 to begin a conversion. The value can be read back from the ADC_VAL[5:2] bits 1 ms after the conversion has started. Assist/torch mode, rather than flash mode, is best in the handset production test to verify the LED V_F.

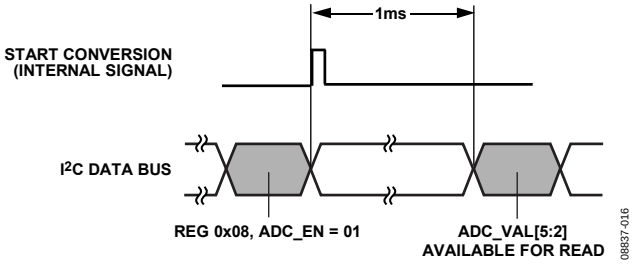

Figure 38. ADC Timing for All Modes Except V_F Measurement in Flash Mode

In flash mode, set ADC_EN = 01. The conversion happens just before the timeout occurs; therefore, the FL_TIM bits set when the ADC sample occurs. This allows the V_F to settle from the

initial peak as the junction temperature of the LED stabilizes. An LED temperature vs. flash time profile for the handset PCB design can be generated during the design phase by varying the FL_TIM bits from the lowest to the highest setting and collecting a V_F sample on each flash.

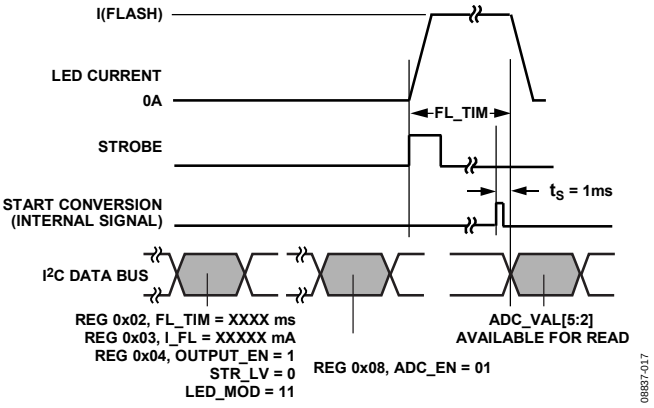

Figure 39. ADC Timing for V_F Measurement in Flash Mode

Die Temperature Mode

The ADC measures the IC die temperature and provides the result to the I²C interface. This is useful during the design phase of the flash system to optimize PCB layout for the best thermal design.

Write ADC_EN = 10 to begin a die temperature measurement. The value can be read back from the ADC_VAL[5:2] bits 1 ms after the conversion has started. The most stable and accurate value of die temperature is available at the end of the flash pulse.

External Voltage Mode

The ADC measures the voltage on the GPIO2 pin when the GPIO2 is configured as an ADC input by setting IO2_CFG = 11. One example is using an external temperature-dependent resistor to create a voltage based on the temperature of the flash LED. The EN line can be used for biasing to reduce leakage current when the flash is not being used.

5 V OUTPUT OPERATION

The ADP1650 can be used as a 5 V boost to supply up to 500 mA for an audio voltage rail or keypad LED driver voltage. To move into voltage regulation mode, the OUTPUT_EN bit must be set to 0. To enable the 5 V output, set LED_MOD[1:0] = 01, and set OUTPUT_EN = 1. The ADP1650 sets the VOUT pin to 5 V and disconnects VOUT from LED_OUT. The VOUT pin is connected to the SW node when the ADP1650 is not enabled. VOUT should not be connected directly to a positive external voltage source because this causes current to flow from VOUT to the battery.

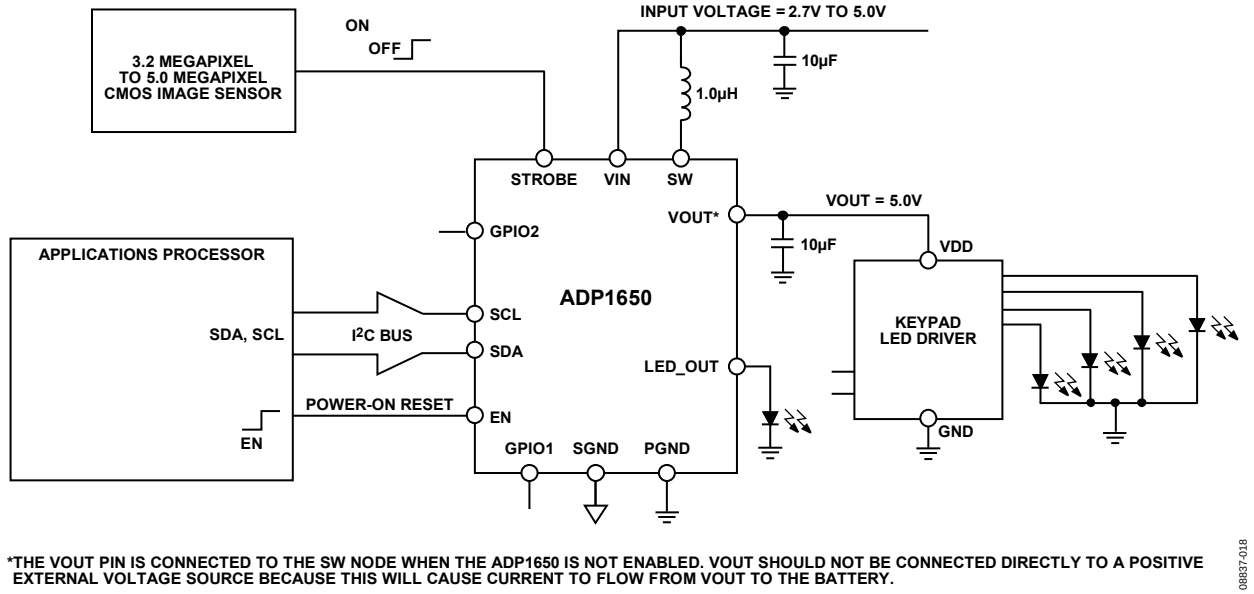

*THE VOUT PIN IS CONNECTED TO THE SW NODE WHEN THE ADP1650 IS NOT ENABLED. VOUT SHOULD NOT BE CONNECTED DIRECTLY TO A POSITIVE EXTERNAL VOLTAGE SOURCE BECAUSE THIS WILL CAUSE CURRENT TO FLOW FROM VOUT TO THE BATTERY.

Figure 40. ADP1650 Voltage Regulation Mode: LED Driver Application

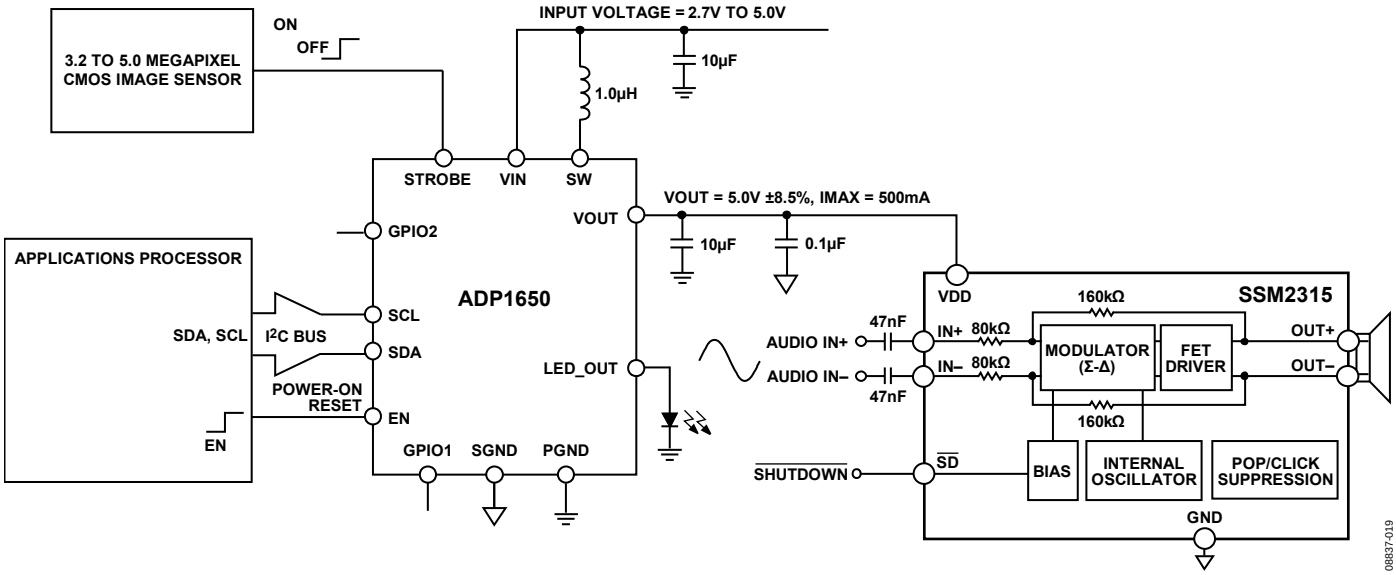

Figure 41. ADP1650 Voltage Regulation Mode: Class-D Audio Application

SAFETY FEATURES

For critical fault conditions, such as output overvoltage, flash timeout, LED output short circuit, and overtemperature conditions, the ADP1650 has built-in protection modes. If a critical fault occurs, OUTPUT_EN (Register 0x04) is set to 0, and the driver shuts down. The appropriate fault bit is set in the fault information register (Register 0x05). The processor can read the fault information register through the I^2C interface to determine the nature of the fault condition. When the fault register is read, the corresponding fault bit is cleared.

If a noncritical event such as an indicator LED open/short or a TxMASK1 or TxMASK2 event occurs, or the dc current limit or soft inductor current limit is hit, the LED driver continues operating. The corresponding information bits are set in the fault information register until the processor reads them.

SHORT-CIRCUIT FAULT

When the flash driver is disabled, the high-side current regulator disconnects the dc path between the battery and the LED, protecting the system from an LED short circuit. The LED_OUT pin features short-circuit protection that monitors the LED voltage when the LED driver is enabled. If the LED_OUT pin remains below the short-circuit detection threshold, a short circuit is detected. Bit 6 of the fault information register is set high. The ADP1650 remains disabled until the processor clears the fault register.

OVERVOLTAGE FAULT

The ADP1650 contains a comparator at the VOUT pin that monitors the voltage between VOUT and GND. If the voltage exceeds 5.5 V (typical), the ADP1650 shuts down. Bit 7 in the fault information register is read back as high. The ADP1650 is disabled until the fault is cleared, ensuring protection against an open circuit.

DYNAMIC OVERVOLTAGE MODE (DOVP)

Dynamic OVP mode is a programmable feature that limits the VOUT voltage exceeding the OVP level while maintaining as much current as possible through the LED. This mode prevents an overvoltage fault in the case of a much higher than expected LED forward voltage. If the LED forward voltage reduces due to the LED temperature rising, the ADP1650 moves out of DOVP mode and regulates the LED at the programmed current level. Set Bit 7 of Register 0x07 high to enable dynamic OVP mode.

TIMEOUT FAULT

When external strobe mode is enabled (Register 0x04, Bit 2), and strobe is set to level-sensitive mode (Register 0x04, Bit 5), if the strobe pin remains high for longer than the programmed timeout period, the timeout fault bit (Register 0x05, Bit 4) is read back as high. The ADP1650 remains disabled until the processor clears the fault register.

OVERTEMPERATURE FAULT

If the junction temperature of the ADP1650 rises above 150°C, a thermal protection circuit shuts down the device. Bit 5 of the fault information register is set high. The ADP1650 remains disabled until the processor clears the fault register.

INDICATOR LED FAULT

The GPIO2 pin features open- and short-circuit protection in the indicator LED mode. If a short or open circuit occurs, Bit 2 of the fault information register is set high. The indicator LED regulator ensures that no damage occurs to the IC during a fault.

CURRENT LIMIT

The internal switch limits battery current by ensuring that the peak inductor current does not exceed the programmed limit (current limit is set by Bit 6 and Bit 7 in Register 0x04). The default mode of the ADP1650 is soft current limit mode. If the peak inductor current hits the limit, Bit 1 of the fault information register is set, and the inductor and LED current cannot increase further. The ADP1650 continues to operate. If the ADP1650 has soft current limit disabled and the peak inductor current exceeds the limit, the part shuts down and Bit 1 of the fault information register is set high. In this case, ADP1650 remains disabled until the processor clears the fault register.

INPUT UNDERVOLTAGE

The ADP1650 includes a battery undervoltage lockout circuit. During 5 V or LED operation, if the battery voltage drops below the 2.4 V (typical) input UVLO threshold, the ADP1650 shuts down. A power-on reset circuit resets the registers to their default conditions when the voltage rises above the UVLO rising threshold.

SOFT START

The ADP1650 has a soft start mode that controls the rate of increase of battery current at startup by digitally controlling the output current ramp. The maximum soft start time is 0.6 ms.

RESET USING THE ENABLE (EN) PIN

A low-to-high transition on the EN pin resets all registers to their default values. Bringing EN low reduces the I_Q to 0.2 μA (typical).

CLEARING FAULTS

The information bits and faults in Register 0x05 clear automatically when the processor reads the fault register.

I²C INTERFACE

The ADP1650 includes an I²C-compatible serial interface for control of the LED current, as well as for readback of system status registers. The I²C chip address is 0x30 (0x60 in write mode and 0x61 in read mode). Additional I²C addresses are available on request.

Figure 42 illustrates the I²C write sequence to a single register. The subaddress content selects which of the nine ADP1650 registers is written to. The ADP1650 sends an acknowledgment to the master after the 8-bit data byte has been written. Figure 43 shows the I²C read sequence of a single register.

The register definitions are shown in the I²C Register Map section.

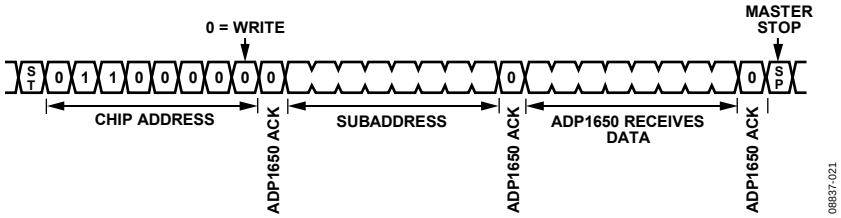

Figure 42. I²C Single Register Write Sequence

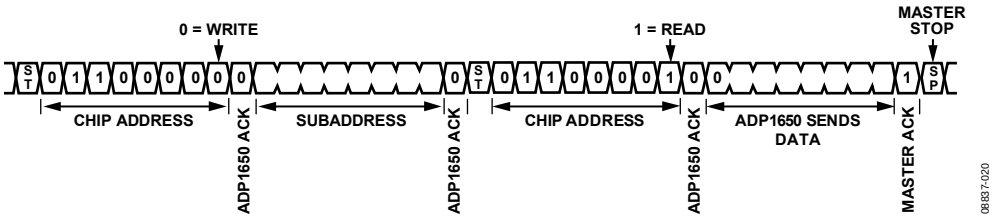

Figure 43. I²C Single Register Read Sequence

I²C REGISTER MAP

The lowest bit number (0) represents the least significant bit, and the highest bit number (7) represents the most significant bit.

Table 9. Design Information Register (Register 0x00)

Bit	R/W	Reset State
[7:0]	R	00100010

Table 10. VREF and Timer Register (Register 0x02)

Bit Name	Bit	R/W	Description
IO2_CFG	[7:6]	R/W	GPIO2 configuration 00 = high impedance (default) 01 = indicator LED 10 = TxMASK2 operation mode 11 = analog input (to ADC)
IO1_CFG	[5:4]	R/W	GPIO1 configuration 00 = high impedance (default) 01 = torch 10 = TxMASK1 operation mode 11 = reserved
FL_TIM	[3:0]	R/W	Flash timer value setting 0000 = 100 ms 0001 = 200 ms 0010 = 300 ms 0011 = 400 ms 0100 = 500 ms 0101 = 600 ms 0110 = 700 ms 0111 = 800 ms 1000 = 900 ms 1001 = 1000 ms 1010 = 1100 ms 1011 = 1200 ms 1100 = 1300 ms 1101 = 1400 ms 1110 = 1500 ms 1111 = 1600 ms (default)

Table 11. Current Set Register (Register 0x03)

Bit Name	Bit	R/W	Description
I_FL	[7:3]	R/W	Flash current value setting 00000 = 300 mA 00001 = 350 mA 00010 = 400 mA 00011 = 450 mA 00100 = 500 mA 00101 = 550 mA 00110 = 600 mA 00111 = 650 mA 01000 = 700 mA 01001 = 750 mA 01010 = 800 mA 01011 = 850 mA 01100 = 900 mA 01101 = 950 mA 01110 = 1000 mA (default) 01111 = 1050 mA 10000 = 1100 mA 10001 = 1150 mA 10010 = 1200 mA 10011 = 1250 mA 10100 = 1300 mA 10101 = 1350 mA 10110 = 1400 mA 10111 = 1450 mA 11000 = 1500 mA
I_TOR	[2:0]	R/W	Torch and assist light current value setting 000 = 25 mA 001 = 50 mA 010 = 75 mA 011 = 100 mA (default) 100 = 125 mA 101 = 150 mA 110 = 175 mA 111 = 200 mA

Table 12. Output Mode Register (Register 0x04)

Bit Name	Bit	R/W	Description
IL_PEAK	[7:6]	R/W	Inductor peak current limit setting 00 = 1.75 A 01 = 2.25 A 10 = 2.75 A (default) 11 = 3.0 A
STR_LV	5	R/W	0 = edge sensitive 1 = level sensitive (default)
FREQ_FB	4	R/W	0 = frequency foldback to 1.5 MHz not allowed (default) 1 = frequency foldback to 1.5 MHz allowed
OUTPUT_EN	3	R/W	0 = output off (default) 1 = output on
STR_MODE	2	R/W	0 = software strobe mode (software flash occurs when output is enabled in flash mode) 1 = hardware strobe mode (the STROBE pin must go high for flash) (default)
LED_MOD	[1:0]	R/W	Configures LED output mode 00 = standby mode (default) 01 = voltage output mode, VOUT = 5 V 10 = assist light mode 11 = flash mode

Table 13. Fault Information Register (Register 0x05)

Bit Name	Bit	R/W	Description
FL_OVP	7	R	0 = no fault (default) 1 = overvoltage fault
FL_SC	6	R	0 = no fault (default) 1 = short-circuit fault
FL_OT	5	R	0 = no fault (default) 1 = overtemperature fault
FL_TO	4	R	0 = no fault (default) 1 = timeout fault
FL_TX1	3	R	0 = no TxMASK1 operation mode during last flash (default) 1 = TxMASK1 operational mode occurred during last flash
FL_IO2	2	R	If GPIO2 is configured as TxMASK2 0 = no TxMASK2 operations mode during last flash (default) 1 = TxMASK2 operational mode occurred during last flash If GPIO2 is configured as ILED 0 = no fault (default) 1 = indicator LED fault
FL_IL	1	R	0 = no fault (default) 1 = inductor peak current limit fault
FL_IDC	0	R	0 = programmed dc current limit not hit (default) 1 = programmed dc current limit hit

Table 14. Input Control Register (Register 0x06)

Bit Name	Bit	R/W	Description
I_TX2	[7:4]	R/W	TxMASK2 operational mode foldback current 0000 = 100 mA 0001 = 150 mA 0010 = 200 mA 0011 = 250 mA 0100 = 300 mA 0101 = 350 mA 0110 = 400 mA (default) 0111 = 450 mA 1000 = 500 mA 1001 = 550 mA 1010 = 600 mA 1011 = 650 mA 1100 = 700 mA 1101 = 750 mA 1110 = 800 mA 1111 = 850 mA
I_TX1	[3:0]	R/W	TxMASK1 operational mode foldback current 0000 = 100 mA 0001 = 150 mA 0010 = 200 mA 0011 = 250 mA 0100 = 300 mA 0101 = 350 mA 0110 = 400 mA (default) 0111 = 450 mA 1000 = 500 mA 1001 = 550 mA 1010 = 600 mA 1011 = 650 mA 1100 = 700 mA 1101 = 750 mA 1110 = 800 mA 1111 = 850 mA

Table 15. Additional Mode Register, AD_MOD (Register 0x07)

Bit Name	Bit	R/W	Description
DYN_OVP	7	R/W	Dynamic OVP 0 = dynamic OVP off (default) 1 = dynamic OVP on
SW_LO	6	R/W	Force 1.5 MHz switching frequency 0 = disabled (default) 1 = enabled
STR_POL	5	R/W	Strobe polarity 0 = active low 1 = active high (default)
I_ILED	[4:3]	R/W	Indicator LED current 00 = 2.75 mA (default) 01 = 5.5 mA 10 = 8.25 mA 11 = 11 mA
IL_DC	[2:1]	R/W	Input dc current limit setting LED current 00 = 1.5 A 01 = 1.75 A 10 = 2.0 A (default) 11 = 2.25 A
IL_DC_EN	0	R/W	Input dc current limit 0 = disabled (default) 1 = enabled

Table 16. Additional Mode Register, ADC (Register 0x08)

Bit Name	Bit	R/W	Description
Reserved	7	R/W	Test mode 0 = disabled (default) 1 = enabled
FL_VB_LO	6	R	Programmed VBAT low threshold status; low battery mode must be enabled in Register 0x09 0 = VDD is greater than the VBAT low threshold (default) 1 = VDD is less than the VBAT low threshold
ADC_VAL	[5:2]	R/W	ADC readback value; four bits (see Figure 17, Figure 18, and Figure 19)
ADC_EN	[1:0]	R/W	ADC enable mode 00 = disabled (default) 01 = LED V_F measurement 10 = die temperature measurement 11 = external voltage mode

Table 17. Battery Low Mode Register (Register 0x09)

Bit Name	Bit	R/W	Description
CL_SOFT	7	R/W	Soft inductor peak current limit 0 = disabled (ADP1650 is disabled when the inductor peak current limit is hit) 1 = enabled (default)
I_VB_LO	[6:3]	R	Current setting for VBAT low mode 0000 = 300 mA 0001 = 350 mA 0010 = 400 mA 0011 = 450 mA 0100 = 500 mA 0101 = 550 mA 0110 = 600 mA 0111 = 650 mA 1000 = 700 mA 1001 = 750 mA 1010 = 800 mA (default) 1011 = 850 mA 1100 = 900 mA 1101 = 950 mA 1110 = 1000 mA 1111 = 1050 mA
V_VB_LO	[2:0]	R/W	VDD level where VBAT low function is enabled 000 = disabled (default) 001 = 3.3 V 010 = 3.35 V 011 = 3.4 V 100 = 3.45 V 101 = 3.5 V 110 = 3.55 V 111 = 3.6 V

APPLICATIONS INFORMATION

EXTERNAL COMPONENT SELECTION

Selecting the Inductor

The ADP1650 boost converter increases the battery voltage to allow driving of one LED, whose voltage drop is higher than the battery voltage plus the current source headroom voltage. This allows the converter to regulate the LED current over the entire battery voltage range and with a wide variation of LED forward voltage.

The inductor saturation current should be greater than the sum of the dc input current and half the inductor ripple current. A reduction in the effective inductance due to saturation increases the inductor current ripple. Table 18 provides a list of recommended inductors.

Selecting the Input Capacitor

The ADP1650 requires an input bypass capacitor to supply transient currents while maintaining constant input and output voltages. The input capacitor carries the input ripple current, allowing the input power source to supply only the dc current. Increased input capacitance reduces the amplitude of the switching frequency ripple on the battery. Due to the dc bias characteristics of ceramic capacitors, a 0603, 6.3 V, X5R/X7R, 10 µF ceramic capacitor is preferable.

Higher value input capacitors help to reduce the input voltage ripple and improve transient response.

To minimize supply noise, place the input capacitor as close to the VIN pin of the ADP1650 as possible. As with the output capacitor, a low ESR capacitor is required. Table 19 provides a list of suggested input capacitors.

Selecting the Output Capacitor

The output capacitor maintains the output voltage and supplies the LED current during the NFET power switch on period. It also stabilizes the loop. The recommended capacitor is a 10 µF, 6.3 V, X5R/X7R ceramic capacitor.

Note that dc bias characterization data is available from capacitor manufacturers and should be taken into account when selecting input and output capacitors. The 6.3 V capacitors are best for most designs. Table 20 provides a list of recommended output capacitors.

Higher output capacitor values reduce the output voltage ripple and improve load transient response. When choosing this value, it is also important to account for the loss of capacitance due to output voltage dc bias.

Ceramic capacitors have a variety of dielectrics, each with different behavior over temperature and applied voltage. Capacitors must have a dielectric that ensures the minimum capacitance over the necessary temperature range and dc bias conditions. X5R or X7R dielectrics with a voltage rating of 6.3 V or 10 V are recommended for best performance. Y5V and Z5U dielectrics are not recommended for use with any dc-to-dc converter because of their poor temperature and dc bias characteristics.

Table 18. Suggested Inductors

Vendor	Value (µH)	Part No.	DCR (mΩ)	ISAT (A)	Dimensions L × W × H (mm)
Toko	1.0	FDSD0312	41.5	4.5	3.0 × 3.0 × 1.2
Toko	1.0	DFE2520	50	3.4	2.5 × 2.0 × 1.2
Coilcraft	1.0	XFL3010	43	2.4	3.0 × 3.0 × 1.0
Murata	1.0	LQM32P_G0	60	3	3.2 × 2.5 × 1.0
FDK	1.0	MIPS3226D	40	3	2.5 × 2.0 × 1.2

Table 19. Suggested Input Capacitors

Vendor	Value	Part No.	Dimensions L × W × H (mm)
Murata	10 µF, 6.3 V	GRM188R60J106ME47	1.6 × 0.8 × 0.8
TDK	10 µF, 6.3 V	C1608JB0J106K	1.6 × 0.8 × 0.8
Taiyo Yuden	10 µF, 6.3 V	JMK107BJ106MA	1.6 × 0.8 × 0.8

Table 20. Suggested Output Capacitors

Vendor	Value	Part No.	Dimensions L × W × H (mm)
Murata	10 µF, 6.3 V	GRM188R60J106ME47	1.6 × 0.8 × 0.8
TDK	10 µF, 6.3 V	C1608JB0J106K	1.6 × 0.8 × 0.8
Taiyo Yuden	10 µF, 6.3 V	JMK107BJ106MA	1.6 × 0.8 × 0.8

The worst-case capacitance accounting for capacitor variation over temperature, component tolerance, and voltage is calculated using the following equation:

$$C_{EFF} = C_{OUT} \times (1 - TEMPCO) \times (1 - TOL)$$

where:
C_{EFF} is the effective capacitance at the operating voltage.
TEMPCO is the worst-case capacitor temperature coefficient.
TOL is the worst-case component tolerance.

In this example, the 10 µF X5R capacitor has the following characteristics:

TEMPCO from −40°C to +85°C is 15%.
TOL is 10%.
C_{OUT} at VOUT (MAX) = 5 V, is 3 µF, as shown in Figure 44.

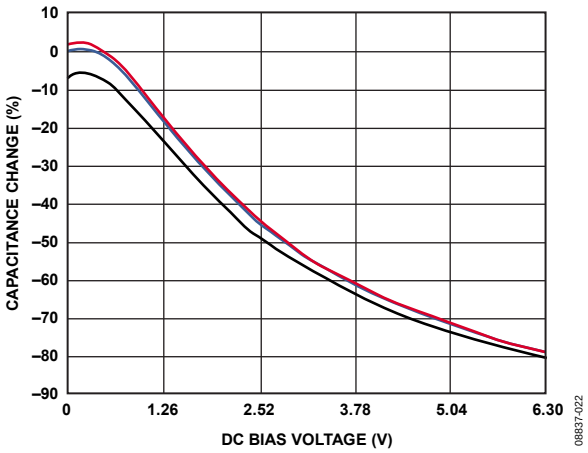

Figure 44. DC Bias Characteristic of a 3 × 6.3 V, 10 µF Ceramic Capacitor

Substituting these values in the equation yields

$$C_{EFF} = 3\ \mu F \times (1 - 0.15) \times (1 - 0.1) = 2.29\ \mu F$$

The effective capacitance needed for stability, which includes temperature and dc bias effects, is 3.0 µF.

PCB LAYOUT

Poor layout can affect performance, causing electromagnetic interference (EMI) and electromagnetic compatibility (EMC) problems, ground bounce, and power losses. Poor layout can also affect regulation and stability. Figure 45 shows optimized layouts implemented using the following guidelines:

- Place the inductor, input capacitor, and output capacitor close to the IC using short tracks. These components carry high switching frequencies and large currents.
- Route the trace from the inductor to the SW pin with as wide a trace as possible. The easiest path is through the center of the output capacitor.
- Route the LED_OUT path away from the inductor and SW node to minimize noise and magnetic interference.
- Maximize the size of ground metal on the component side to help with thermal dissipation.
- Use a ground plane with two to three vias connecting to the component side ground near the output capacitor to reduce noise interference on sensitive circuit nodes.
- With the LFCSP package, six to eight thermal vias connect the ground paddle to the main PCB ground plane.
- Analog Devices applications engineers can be contacted through the Analog Devices sales team to discuss different layouts based on system design constraints.

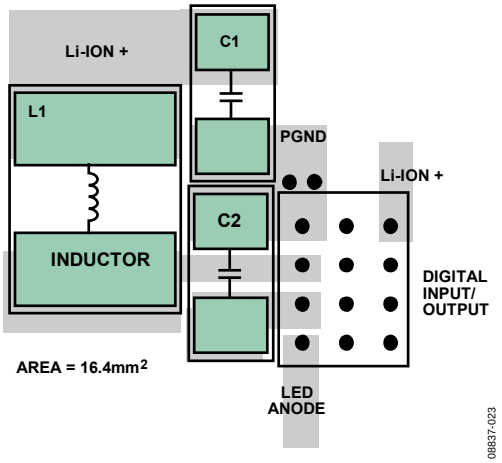

Figure 45. Layout of the ADP1650 Driving a High Power White LED (WLCSP)

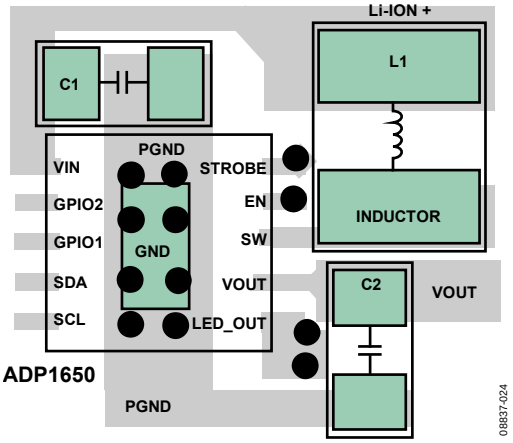

Figure 46. Example Layout of the ADP1650 Driving a High Power White LED (LFCSP)

OUTLINE DIMENSIONS

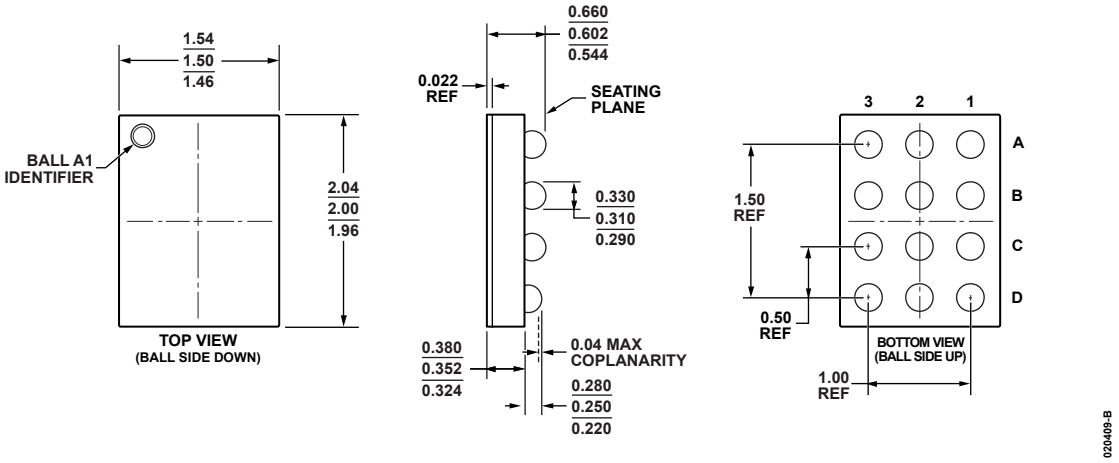

Figure 47. 12-Ball Wafer Level Chip Scale Package [WLCSP]
(CB-12-4)
Dimensions shown in millimeters

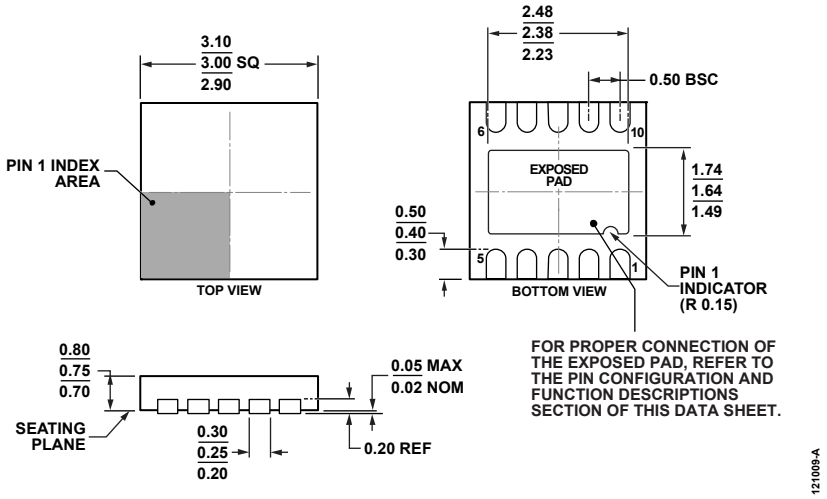

Figure 48. 10-Lead Lead Frame Chip Scale Package [LFCSP_WD]
3 mm × 3 mm Body, Very Very Thin, Dual Lead
(CP-10-9)
Dimensions shown in millimeters

ORDERING GUIDE

Model[1]	Temperature Range	Package Description	Package Option[2]	Branding
ADP1650ACBZ-R7	−40°C to +125°C	12-Ball Wafer Level Chip Scale Package [WLCSP]	CB-12-4	LE4
ADP1650ACPZ-R7	−40°C to +125°C	10-Lead Frame Chip Scale Package [LFCSP_WD]	CP-10-9	LGX
ADP1650CB-EVALZ		Evaluation Board WLCSP Package		
ADP1650CP-EVALZ		Evaluation Board LFCSP Package		

[1] Z = RoHS Compliant Part.
[2] This package option is halide free.

NOTES

NOTES

NOTES

©2010–2011 Analog Devices, Inc. All rights reserved. Trademarks and registered trademarks are the property of their respective owners.
D08837-0-4/11(C)

Компания «ЭлектроПласт» предлагает заключение долгосрочных отношений при поставках импортных электронных компонентов на взаимовыгодных условиях!

Наши преимущества:

- Оперативные поставки широкого спектра электронных компонентов отечественного и импортного производства напрямую от производителей и с крупнейших мировых складов;
- Поставка более 17-ти миллионов наименований электронных компонентов;
- Поставка сложных, дефицитных, либо снятых с производства позиций;
- Оперативные сроки поставки под заказ (от 5 рабочих дней);
- Экспресс доставка в любую точку России;
- Техническая поддержка проекта, помощь в подборе аналогов, поставка прототипов;
- Система менеджмента качества сертифицирована по Международному стандарту ISO 9001;
- Лицензия ФСБ на осуществление работ с использованием сведений, составляющих государственную тайну;
- Поставка специализированных компонентов (Xilinx, Altera, Analog Devices, Intersil, Interpoint, Microsemi, Aeroflex, Peregrine, Syfer, Eurofarad, Texas Instrument, Miteq, Cobham, E2V, MA-COM, Hittite, Mini-Circuits,General Dynamics и др.);

Помимо этого, одним из направлений компании «ЭлектроПласт» является направление «Источники питания». Мы предлагаем Вам помощь Конструкторского отдела:

- Подбор оптимального решения, техническое обоснование при выборе компонента;
- Подбор аналогов;
- Консультации по применению компонента;
- Поставка образцов и прототипов;
- Техническая поддержка проекта;
- Защита от снятия компонента с производства.

Как с нами связаться

Телефон: 8 (812) 309 58 32 (многоканальный)
Факс: 8 (812) 320-02-42
Электронная почта: org@eplast1.ru
Адрес: 198099, г. Санкт-Петербург, ул. Калинина, дом 2, корпус 4, литера А.