COOPER Bussmann

Surge Protection Made Simple™
Photovoltaic Applications
Modular DIN Rail SPD Solutions

Type 4 RoHS CE

Description

The Cooper Bussmann three-module photovoltaic Surge Protective Device (SPD) features *easy*ID™ visual indication and optional remote contact signaling (floating changeover contact) for use in PV systems.

These complete surge protective devices are suitable for all PV systems in accordance with UL 1449 3rd Edition, EN 50539-11 and IEC 60364-7-712. Includes a two year limited warranty.

These prewired solutions consist of a base and modules that feature a disconnection device in the event of an overload.

In case of insulation faults in the generator circuit, a reliable and tested fault-resistant Y circuit prevents damage to the surge protective devices.

The green and red visual indicator flags show the module protective status (green = good, red = replace). Apart from this visual indication, the remote signaling option features a three terminal floating changeover contact that can be used as a make or break contact depending on the particular monitoring system design employed.

2 YEAR WARRANTY

BSPP_____YPV(R)

***easy*ID™**
Visual Status Indication

Remote Signal Contact Available

Dimensions - mm

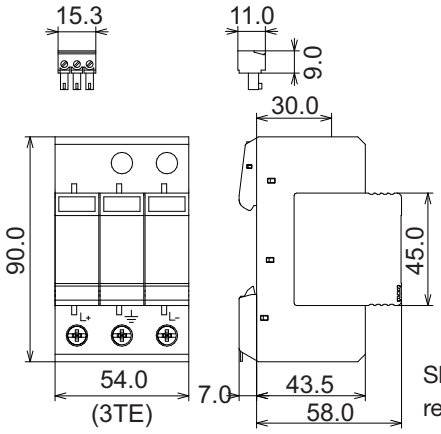

Shown with optional remote contact signaling

Module Circuit Diagrams

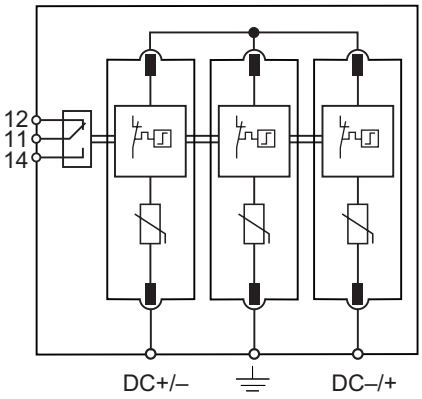

BSPP_____YPV*

Shown with optional remote contact signaling

* For remote signaling contact, add "R" suffix to the part number.
E.g., BSPP3600YPV***R***

Ordering Information			
Nominal PV System Voltage		600Vdc	1000Vdc
Catalog Numbers:	Without Remote Contact Signaling	BSPP3600YPV	BSPP31000YPV
(Base + Modules)	With Remote Contact Signaling	BSPP3600YPVR	BSPP31000YPVR
Replacement Modules:		BPP300SYPV	BPP500SYPV

Specifications			
Nominal PV System Voltage		600V	1000V
U_{CPV} per EN50539-11*		600Vdc	1000Vdc
System MOV MCOV		700Vdc	1170Vdc
Max System Discharge Current (8/20µs) [I_{max}]		40kA	40kA
Voltage Protection Level [U_P]		≤2.5kV	≤4.0kV
Voltage Protection Level at 5kA [U_P]		≤2.0kV	≤3.5kV
Short-Circuit Withstand Capability [I_{SCPV}]		125A	
Technology		Fault Resistant Y MOV Circuit	
Operating Temperature Range [T_U]		-40°C to +80°C	
Nominal Discharge Current (8/20µs) (DC+ → DC-) (DC+/DC- → PE) [I_n]		20kA	
Response Time [t_A]		≤25ns	
Operating State/Fault Indication		Green (good) / Red (replace)	
Conductor Ratings and Cross-Sectional Area:	Minimum	60/75°C 1.5mm² / 14AWG Solid/Flexible	
	Maximum	60/75°C 35mm² / 2AWG Stranded / 25mm² / 4AWG Flexible	
Mounting		35mm DIN-Rail per EN 60715	
Enclosure Material		UL 94V0 Thermoplastic	
Degree of Protection		IP20	
Capacity		3 Modules, DIN 43880	
Standards Information:	UL	UL 1449 3rd Edition (Type 2)	
	IEC	EN 50539-11, IEC 61643-11 Type 2, IEC 61643-1 Class II	
Product Warranty		Two Years*	

Remote Contact Signaling	
Remote Contact Signaling Type	Changeover Contact
AC Switching Capacity (Volts/Amps)	250V / 0.1A
DC Switching Capacity (Volts/Amps)	250V / 0.1A; 125V / 0.2A; 75V / 0.5A
Conductor Ratings and Cross-Sectional Area for Remote Contact Signal Terminals	60/75°C Max. 1.5mm² / 14AWG Solid/Flexible
Ordering Information	Order from Catalog Numbers Above

* Maximum continuous operating voltage for PV applications.

Typical Application Schematics

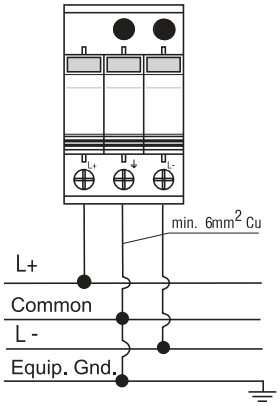

Application A
Two energized poles/modes
600 & 1000Vdc systems

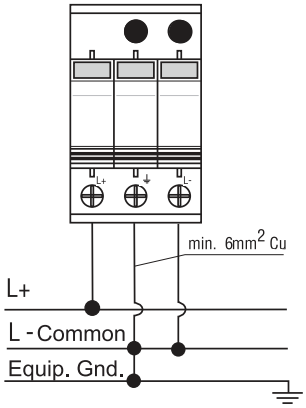

Application B
One energized pole/mode
600Vdc & 1000Vdc systems only

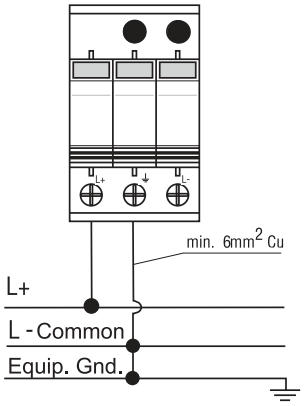

Application C
One energized pole/mode
600Vdc & 1000Vdc** systems

* See Cooper Bussmann SPD Limited Warranty Statement (3A1502) for details at www.cooperbussmann.com/surge.

** BSPP31000YPV(R) 1000Vdc one energized pole/mode requires the following:

1. Use a suitable electrical insulator to keep a 10mm min. safety distance from the PV-SPD and other grounded parts in the housing.
2. No metal covers are in the area of the module release buttons as shown.

The only controlled copy of this Data Sheet is the electronic read-only version located on the Bussmann Network Drive. All other copies of this document are by definition uncontrolled. This bulletin is intended to clearly present comprehensive product data and provide technical information that will help the end user with design applications. Bussmann reserves the right, without notice, to change design or construction of any products and to discontinue or limit distribution of any products. Bussmann also reserves the right to change or update, without notice, any technical information contained in this bulletin. Once a product has been selected, it should be tested by the user in all possible applications.

© 2013 Cooper Bussmann
www.cooperbussmann.com

COOPER Bussmann

Компания «ЭлектроПласт» предлагает заключение долгосрочных отношений при поставках импортных электронных компонентов на взаимовыгодных условиях!

Наши преимущества:

- Оперативные поставки широкого спектра электронных компонентов отечественного и импортного производства напрямую от производителей и с крупнейших мировых складов;
- Поставка более 17-ти миллионов наименований электронных компонентов;
- Поставка сложных, дефицитных, либо снятых с производства позиций;
- Оперативные сроки поставки под заказ (от 5 рабочих дней);
- Экспресс доставка в любую точку России;
- Техническая поддержка проекта, помощь в подборе аналогов, поставка прототипов;
- Система менеджмента качества сертифицирована по Международному стандарту ISO 9001;
- Лицензия ФСБ на осуществление работ с использованием сведений, составляющих государственную тайну;
- Поставка специализированных компонентов (Xilinx, Altera, Analog Devices, Intersil, Interpoint, Microsemi, Aeroflex, Peregrine, Syfer, Eurofarad, Texas Instrument, Miteq, Cobham, E2V, MA-COM, Hittite, Mini-Circuits,General Dynamics и др.);

Помимо этого, одним из направлений компании «ЭлектроПласт» является направление «Источники питания». Мы предлагаем Вам помощь Конструкторского отдела:

- Подбор оптимального решения, техническое обоснование при выборе компонента;
- Подбор аналогов;
- Консультации по применению компонента;
- Поставка образцов и прототипов;
- Техническая поддержка проекта;
- Защита от снятия компонента с производства.

Как с нами связаться

Телефон: 8 (812) 309 58 32 (многоканальный)
Факс: 8 (812) 320-02-42
Электронная почта: org@eplast1.ru
Адрес: 198099, г. Санкт-Петербург, ул. Калинина, дом 2, корпус 4, литера А.