THIS DRAWING IS UNPUBLISHED. RELEASED FOR PUBLICATION 20
© COPYRIGHT 20 BY - ALL RIGHTS RESERVED.

| LOC | DIST |
|---|---|
| GP | 00 |

REVISIONS

| P | LTR | DESCRIPTION | DATE | DWN | APVD |
|---|---|---|---|---|---|
| | A | RELEASED PER ECO-14-000529 | 14JAN2014 | JZ | SH |
| | A1 | REMOVE 'PRELIMINARY' MARK | 03SEP2018 | IT | SH |

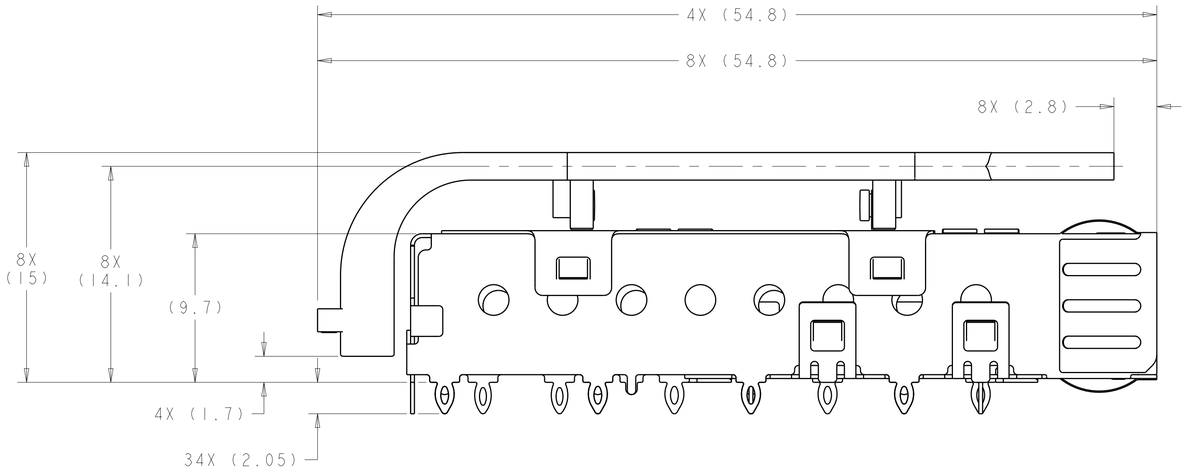


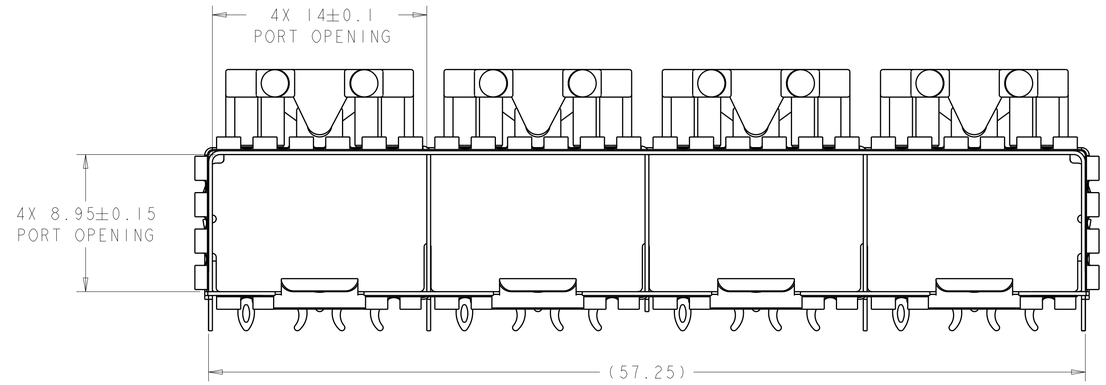


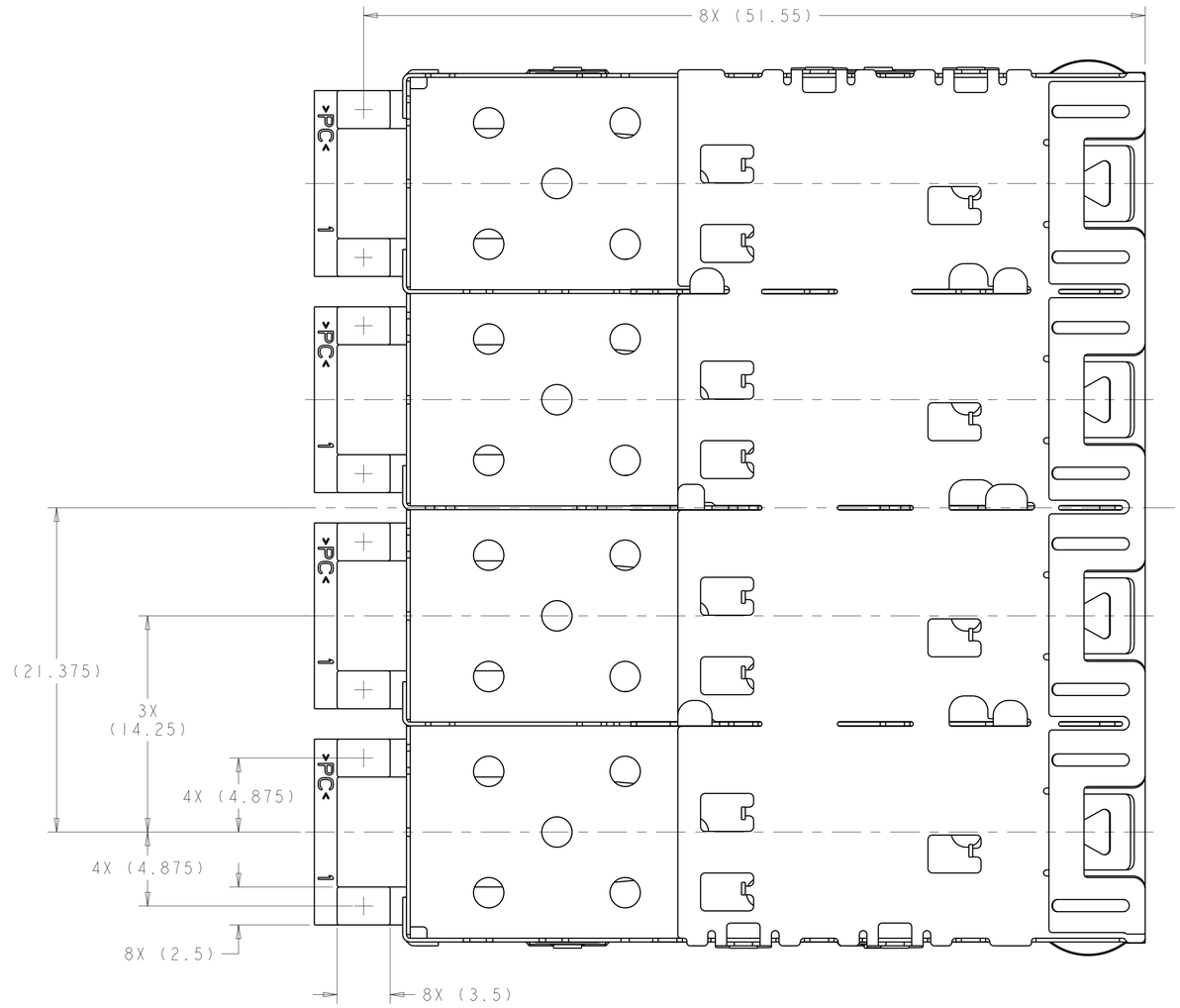


1. MATERIAL:
   CAGE ASSEMBLY: NICKEL SILVER ALLOY
   EMI SPRINGS: COPPER ALLOY
   LIGHT PIPE BRACKET: STAINLESS STEEL
   LIGHT PIPE: POLYCARBONATE, CLEAR
2. FINISH:
   SPRINGS: MINIMUM OF 0.8um TIN PLATE OVER A MINIMUM OF 0.8um NICKEL UNDERPLATE.
   NON-PLATED EDGES PERMISSIBLE.
3. PADS AND VIAS CHASSIS GROUND.
4. DATUM AND BASIC DIMENSION ESTABLISHED BY CUSTOMER.
5. MATES WITH SFP MSA COMPLIANT TRANSCEIVERS.
6. INTERPRETATION OF DATUM REFERENCE FRAME IN ACCORDANCE WITH SECT 4.4.1.1 OF ASME Y14.5M-1994.
7. REFFERENCE APPLICATION SPEC. 114-13120, HOLE A, FOR RECOMMENDED DRILL HOLE DIAMETER AND PLATING THICKNESS.
8. REFFERENCE APPLICATION SPEC. 114-13120, HOLE B, FOR RECOMMENDED DRILL HOLE DIAMETER AND PLATING THICKNESS.
9. HOLE PATTERN REPEATS FOR EACH PORT. SPACING BETWEEN PORTS IS 14.25mm.
10. MINIMUM PC BOARD THICKNESS:
    SINGLE SIDED = 1.5mm
    DOUBLE SIDED = 2.25mm
11. LIGHT PIPE ASSEMBLY SHIPPED UNASSEMBLED TO CAGE ASSEMBLY. CAGE ASSEMBLY TO BE PRESSED INTO THE PCB PRIOR TO ATTACHING THE LIGHT PIPE ASSEMBLY TO THE CAGE.
12. CERTAIN MATING TRANSCEIVERS MAY REQUIRE ADDITIONAL PCB THICKNESS THAT WOULD NEED TO BE DETERMINED BY THE CUSTOMER.

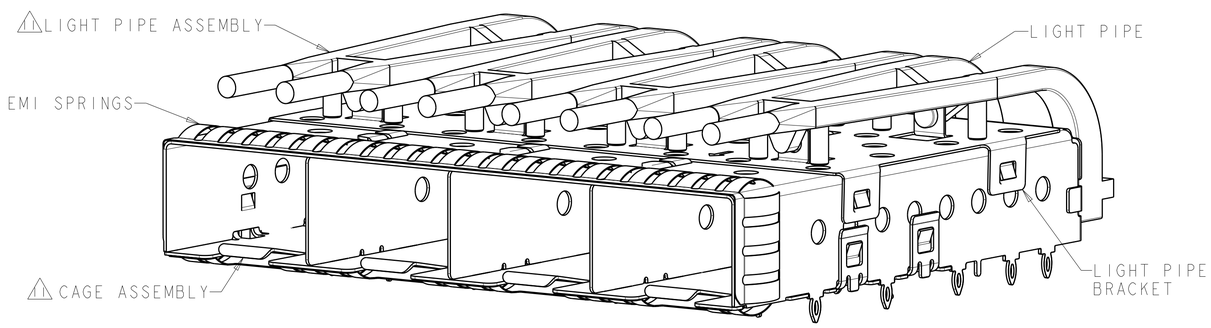


2110069-1
SCALE 4:1

2110069-1
PART NUMBER

THIS DRAWING IS A CONTROLLED DOCUMENT.

DIMENSIONS: mm

TOLERANCES UNLESS OTHERWISE SPECIFIED:
0 PLC ±0.1
1 PLC ±0.1
2 PLC ±0.1
3 PLC ±0.1
4 PLC ±0.1
ANGLES ±1°0'

MATERIAL 1
FINISH 2

| | | |
|---|---|---|
| DWN | Z.M.REAM | 16JAN2009 |
| CHK | M.R.SCHMITT | 16JAN2009 |
| APVD | R.H.WERTZ | 16JAN2009 |

PRODUCT SPEC 108-2364
APPLICATION SPEC 114-13120
WEIGHT -

TE Connectivity

NAME SFP+ 1X4 CAGE ASSEMBLY
PRESS-FIT, EXTERNAL EMI SPRINGS
W/ REDUCED LENGTH LIGHT PIPE

| SIZE | CAGE CODE | DRAWING NO | RESTRICTED TO |
|---|---|---|---|
| A1 | 00779 | C-2110069 | - |

CUSTOMER DRAWING | SCALE 5:1 | SHEET 1 OF 4 | REV A1

4805 (3/11)

THIS DRAWING IS UNPUBLISHED. RELEASED FOR PUBLICATION 20
© COPYRIGHT 20 BY - ALL RIGHTS RESERVED.

| LOC | DIST |
|---|---|
| GP | 00 |

REVISIONS

| P | LTR | DESCRIPTION | DATE | DWN | APVD |
|---|---|---|---|---|---|
| | - | SEE SHEET 1 | - | - | - |

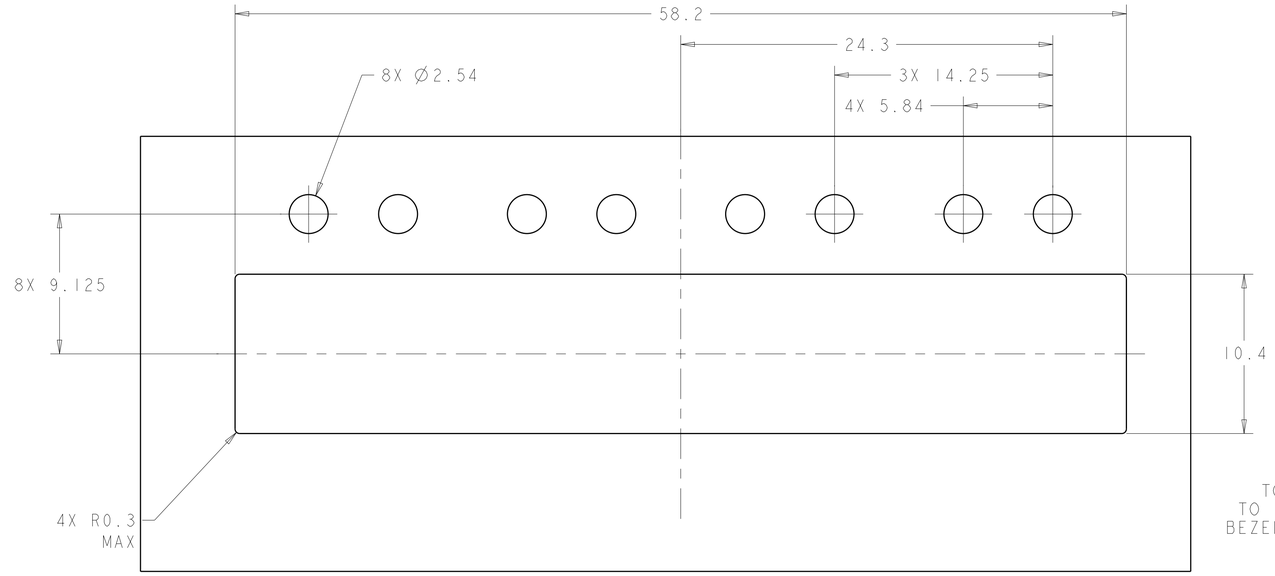


RECOMMENDED BEZEL CUT-OUT
SINGLE SIDED APPLICATIONS

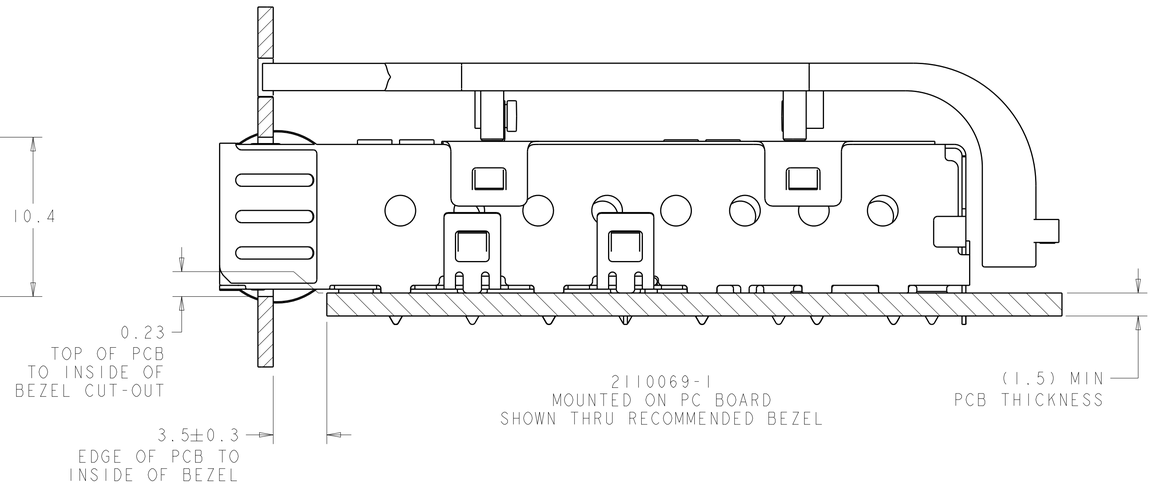


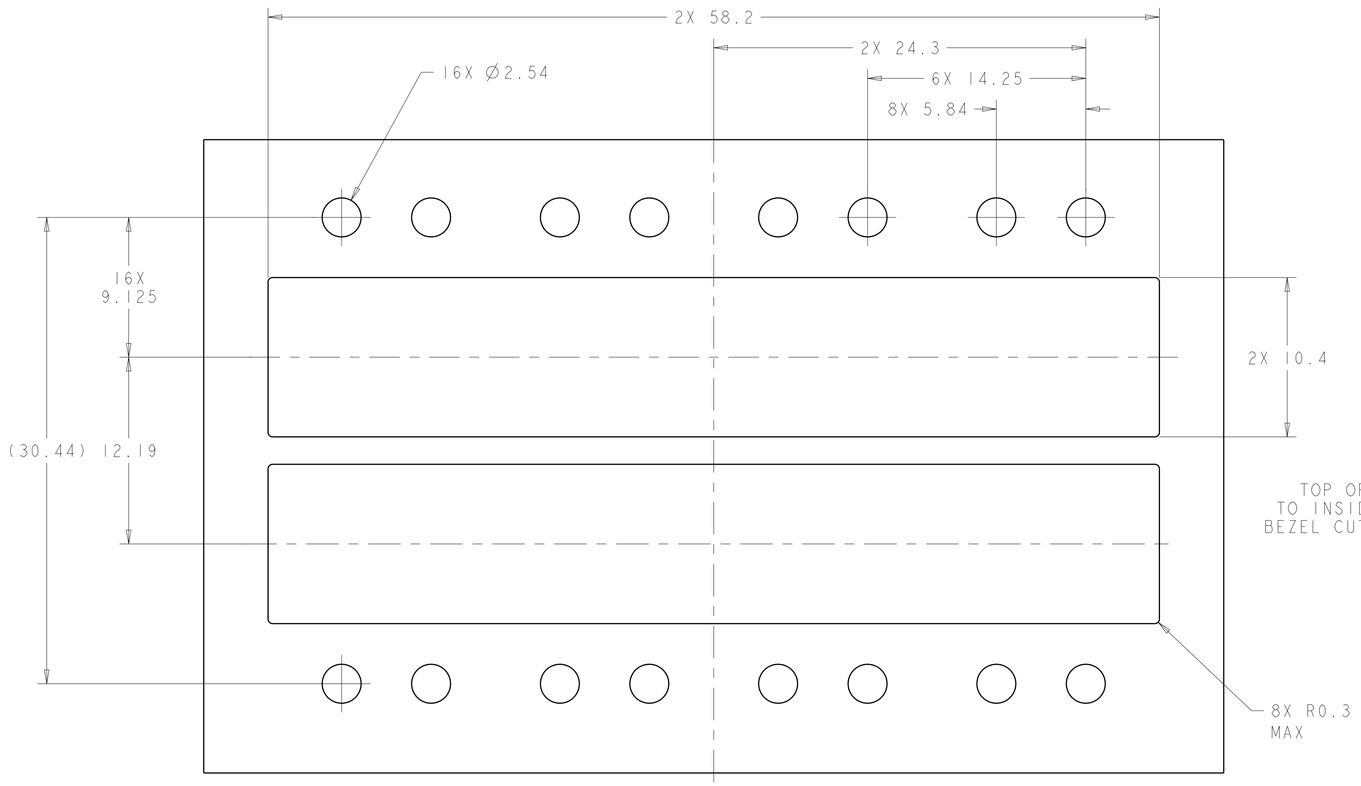


RECOMMENDED BEZEL CUT-OUT
BELLY TO BELLY APPLICATIONS

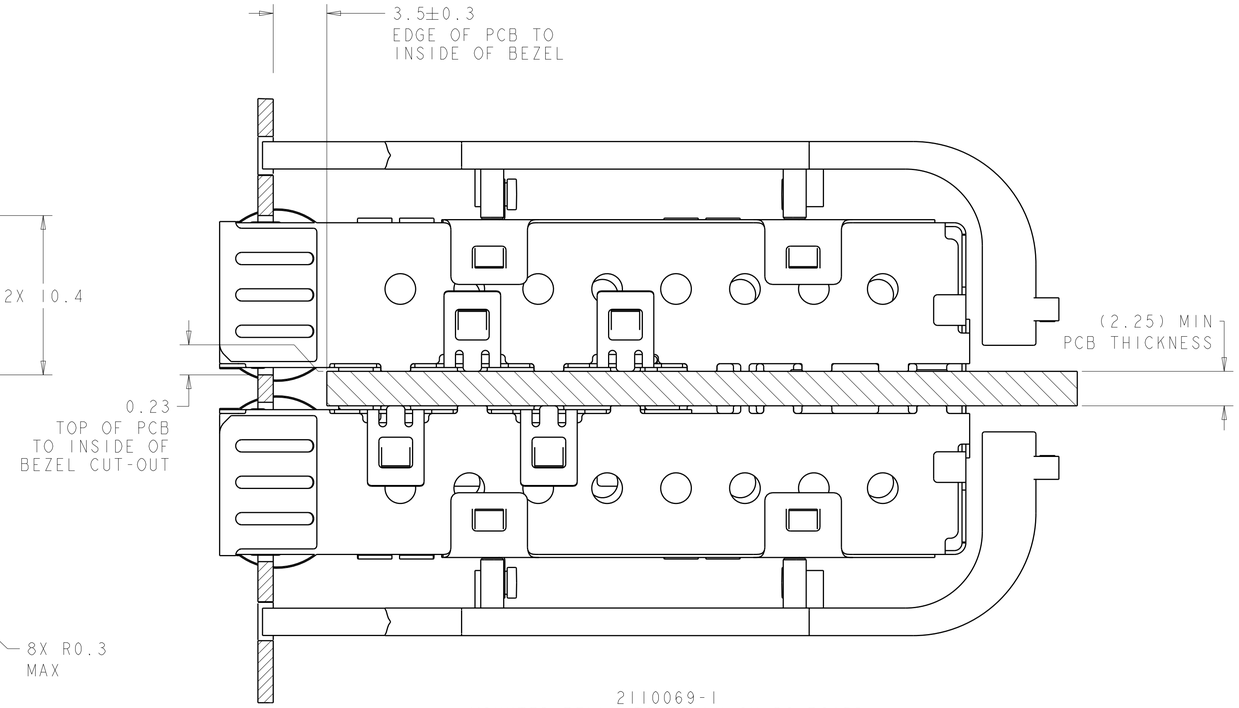


2110069-1
MOUNTED BELLY TO BELLY ON PC BOARD
SHOWN THRU RECOMMENDED BEZEL

THIS DRAWING IS A CONTROLLED DOCUMENT.

DIMENSIONS: mm

TOLERANCES UNLESS OTHERWISE SPECIFIED:
0 PLC ±0.1
1 PLC ±0.1
2 PLC ±0.1
3 PLC ±0.1
4 PLC ±0.1
ANGLES ±1°0'

MATERIAL - -
FINISH - -

| | | |
|---|---|---|
| DWN | Z.M.REAM | 16JAN2009 |
| CHK | M.R.SCHMITT | 16JAN2009 |
| APVD | R.H.WERTZ | 16JAN2009 |
| PRODUCT SPEC | 108-2364 | |
| APPLICATION SPEC | 114-13120 | |
| WEIGHT | - | |

TE Connectivity

NAME: SFP+ 1X4 CAGE ASSEMBLY
PRESS-FIT, EXTERNAL EMI SPRINGS
W/ REDUCED LENGTH LIGHT PIPE

| SIZE | CAGE CODE | DRAWING NO | RESTRICTED TO |
|---|---|---|---|
| A1 | 00779 | C-2110069 | - |

CUSTOMER DRAWING | SCALE 5:1 | SHEET 2 OF 4 | REV A1

4805 (3/11)

THIS DRAWING IS UNPUBLISHED. RELEASED FOR PUBLICATION 20
© COPYRIGHT 20 BY - ALL RIGHTS RESERVED.

| LOC | DIST |
|---|---|
| GP | 00 |

REVISIONS

| P | LTR | DESCRIPTION | DATE | DWN | APVD |
|---|---|---|---|---|---|
| | - | SEE SHEET 1 | - | - | - |

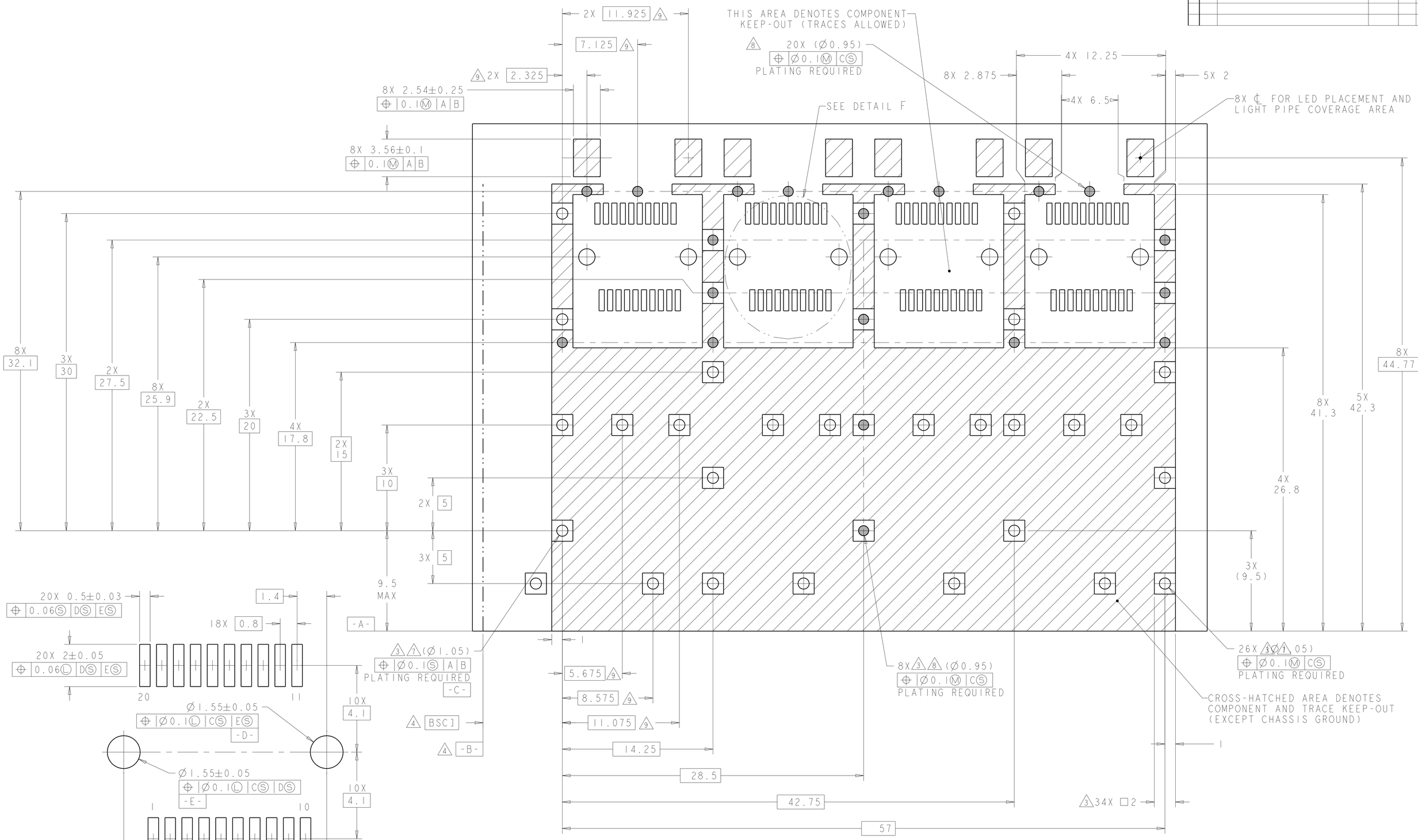


RECOMMENDED PCB CONFIGURATION
WITH KEEP-OUT AREAS
SINGLE SIDED APPLICATIONS 10
SCALE 6:1

DETAIL F
RECOMMENDED PT CONNECTOR LAYOUT
4X INDIVIDUALLY
SCALE 12:1

THIS DRAWING IS A CONTROLLED DOCUMENT.

DIMENSIONS: mm

TOLERANCES UNLESS OTHERWISE SPECIFIED:
0 PLC ±0.1
1 PLC ±0.1
2 PLC ±0.1
3 PLC ±0.1
4 PLC ±0.1
ANGLES ±1°0'

MATERIAL - -
FINISH - -

| | | |
|---|---|---|
| DWN | Z.M.REAM | 16JAN2009 |
| CHK | M.R.SCHMITT | 16JAN2009 |
| APVD | R.H.WERTZ | 16JAN2009 |

PRODUCT SPEC 108-2364
APPLICATION SPEC 114-13120
WEIGHT -

TE Connectivity

NAME SFP+ 1X4 CAGE ASSEMBLY PRESS-FIT, EXTERNAL EMI SPRINGS W/ REDUCED LENGTH LIGHT PIPE

| SIZE | CAGE CODE | DRAWING NO | RESTRICTED TO |
|---|---|---|---|
| A1 | 00779 | C-2110069 | - |

CUSTOMER DRAWING | SCALE 5:1 | SHEET 3 OF 4 | REV A1

4805 (3/11)

THIS DRAWING IS UNPUBLISHED. RELEASED FOR PUBLICATION 20
© COPYRIGHT 20 BY - ALL RIGHTS RESERVED.

| LOC | DIST |
|---|---|
| GP | 00 |

REVISIONS

| P | LTR | DESCRIPTION | DATE | DWN | APVD |
|---|---|---|---|---|---|
| | - | SEE SHEET 1 | - | - | - |

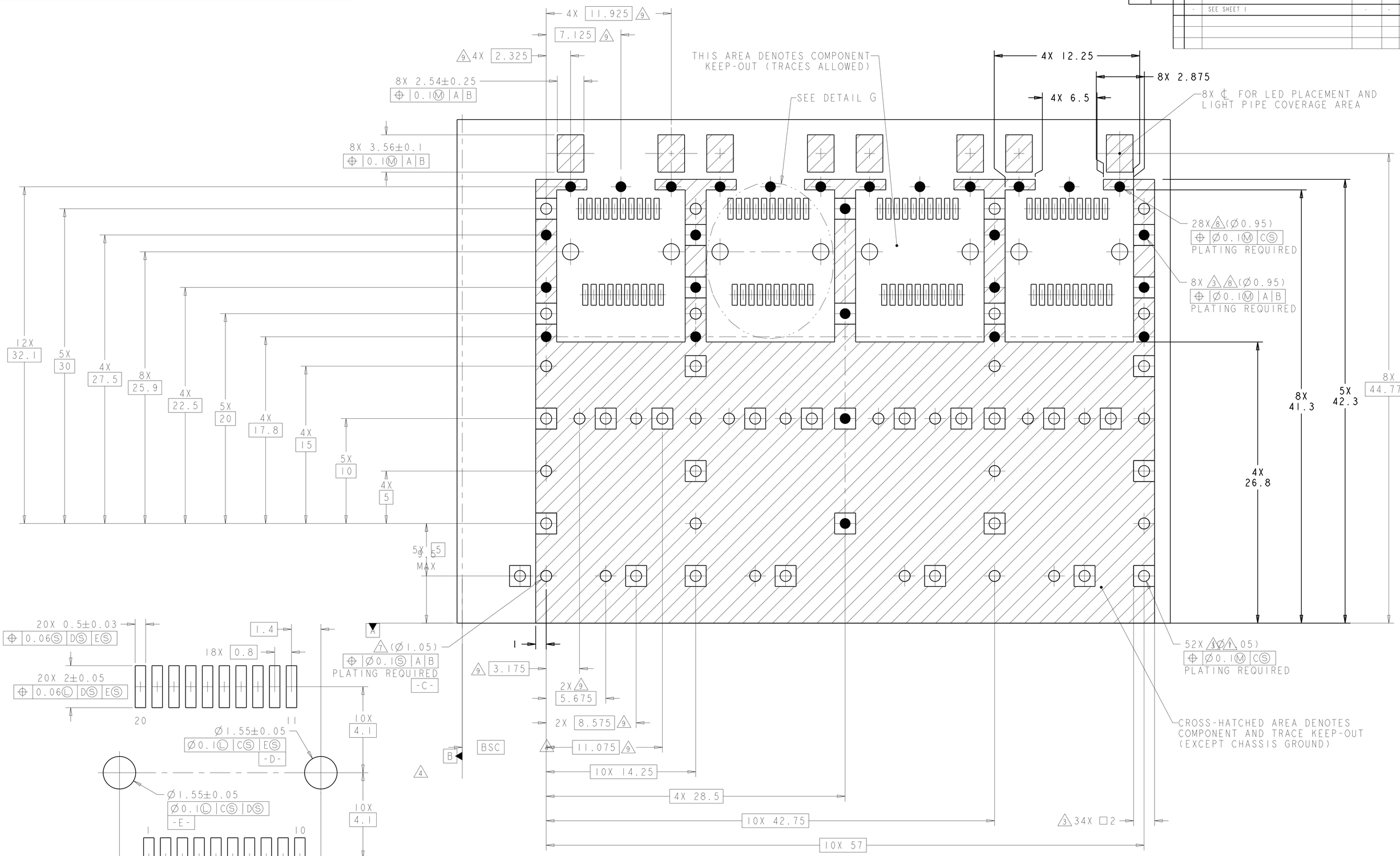


RECOMMENDED PCB CONFIGURATION
WITH KEEP-OUT AREAS
BELLY TO BELLY APPLICATIONS 10
SCALE 6:1

DETAIL G
RECOMMENDED PT CONNECTOR LAYOUT
8X INDIVIDUALLY
SCALE 12:1

THIS DRAWING IS A CONTROLLED DOCUMENT.

DIMENSIONS: mm

TOLERANCES UNLESS OTHERWISE SPECIFIED:
0 PLC ±0.1
1 PLC ±0.1
2 PLC ±0.1
3 PLC ±0.1
4 PLC ±0.1
ANGLES ±1°0'

MATERIAL - -
FINISH - -

| | | |
|---|---|---|
| DWN | Z.M.REAM | 16JAN2009 |
| CHK | M.R.SCHMITT | 16JAN2009 |
| APVD | R.H.WERTZ | 16JAN2009 |

PRODUCT SPEC 108-2364
APPLICATION SPEC 114-13120
WEIGHT -

TE Connectivity

NAME SFP+ 1X4 CAGE ASSEMBLY PRESS-FIT, EXTERNAL EMI SPRINGS W/ REDUCED LENGTH LIGHT PIPE

| SIZE | CAGE CODE | DRAWING NO | RESTRICTED TO |
|---|---|---|---|
| A1 | 00779 | C-2110069 | - |

CUSTOMER DRAWING

| SCALE | SHEET | OF | REV |
|---|---|---|---|
| 5:1 | 4 | 4 | A1 |

Компания «ЭлектроПласт» предлагает заключение долгосрочных отношений при поставках импортных электронных компонентов на взаимовыгодных условиях!

Наши преимущества:

- Оперативные поставки широкого спектра электронных компонентов отечественного и импортного производства напрямую от производителей и с крупнейших мировых складов;
- Поставка более 17-ти миллионов наименований электронных компонентов;
- Поставка сложных, дефицитных, либо снятых с производства позиций;
- Оперативные сроки поставки под заказ (от 5 рабочих дней);
- Экспресс доставка в любую точку России;
- Техническая поддержка проекта, помощь в подборе аналогов, поставка прототипов;
- Система менеджмента качества сертифицирована по Международному стандарту ISO 9001;
- Лицензия ФСБ на осуществление работ с использованием сведений, составляющих государственную тайну;
- Поставка специализированных компонентов (Xilinx, Altera, Analog Devices, Intersil, Interpoint, Microsemi, Aeroflex, Peregrine, Syfer, Eurofarad, Texas Instrument, Miteq, Cobham, E2V, MA-COM, Hittite, Mini-Circuits,General Dynamics и др.);

Помимо этого, одним из направлений компании «ЭлектроПласт» является направление «Источники питания». Мы предлагаем Вам помощь Конструкторского отдела:

- Подбор оптимального решения, техническое обоснование при выборе компонента;
- Подбор аналогов;
- Консультации по применению компонента;
- Поставка образцов и прототипов;
- Техническая поддержка проекта;
- Защита от снятия компонента с производства.

**Как с нами связаться**

**Телефон:** 8 (812) 309 58 32 (многоканальный)
**Факс:** 8 (812) 320-02-42
**Электронная почта:** org@eplast1.ru
**Адрес:** 198099, г. Санкт-Петербург, ул. Калинина, дом 2, корпус 4, литера А.