THIS DRAWING IS UNPUBLISHED. RELEASED FOR PUBLICATION 20
© COPYRIGHT 20 BY - ALL RIGHTS RESERVED.

REVISIONS

P	LTR	DESCRIPTION	DATE	DWN	APVD
	A	REVISED PER ECR-18-014960	21SEP2018	SS	JL
	A1	REVISED PER ECR-19-008871	13JUN2019	SR	DD
	A2	REVISED PER ECR-19-009651	12JUL2019	SR	DD

1. MATERIALS:
   HOUSING: PBT
   DIMMING CONTACTS (QTY. 4): COPPER ALLOY
   LINE VOLTAGE CONTACTS (QTY. 3): COPPER ALLOY
   GASKET: VINYL/NITRILE FOAM
   O-RING: SILICONE RUBBER
   MEMBRANE VENT: PTFE

2. FINISH:
   DIMMING CONTACTS: NICKEL UNDERPLATE ENTIRE CONTACT 0.127 µm MIN THICK. SELECTIVE GOLD PLATE CONTACT MATING AREA (MATING FACE SIDE ONLY) 0.76 µm MIN THICK. MATTE TIN PLATE TAB ON BOTH SIDES 0.30 µm MIN THICK.
   LINE VOLTAGE CONTACTS: MATTE TIN PLATE

3. MATING INTERFACE PER ANSI C136.41-2013.

4. ADHESIVE BACKED GASKET SUPPLIED BUT NOT INSTALLED.

5. ADDITIONAL COVERS AND SLEEVES OF VARIOUS HEIGHTS ARE AVAILABLE. CONTACT TE CONNECTIVITY FOR MORE OPTIONS.

7. THIS PRODUCT HAS NOT COMPLETED VALIDATION TESTING.

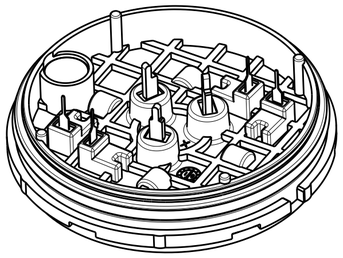

2336396-1 SHOWN

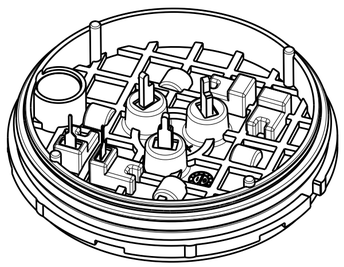

1-2336396-1 SHOWN

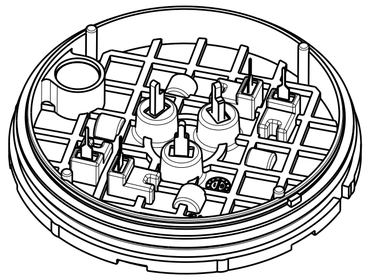

2336396-2 SHOWN

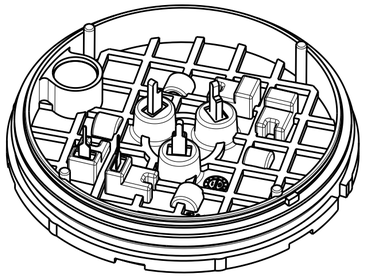

1-2336396-2 SHOWN

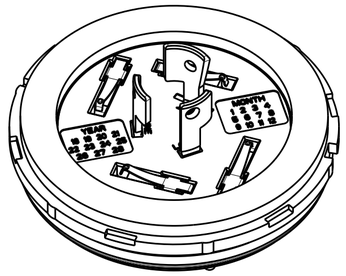

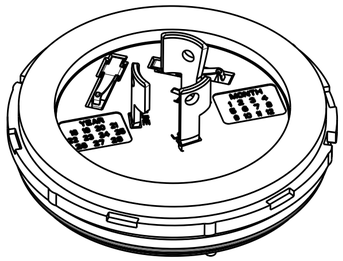

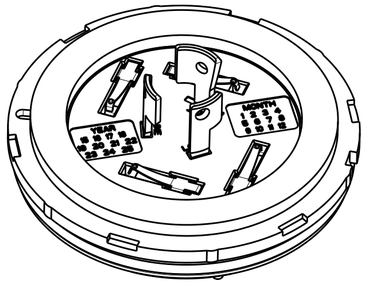

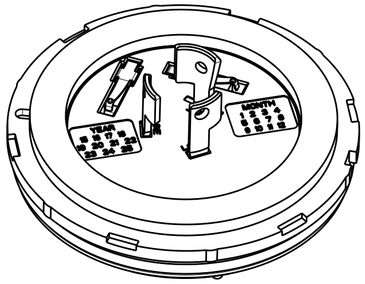

2213996-X	2306130-X	5	13.04	26.20	Ø82.24	Ø78.54	Ø69.80	Ø70.70	Ø72.25	Ø77.53	Ø77.74	Ø81.15	1-2336396-2
2213996-X	2306130-X	7	13.04	26.20	Ø82.24	Ø78.54	Ø69.80	Ø70.70	Ø72.25	Ø77.53	Ø77.74	Ø81.15	2336396-2
2213805-X	2213748-X	5	4.35	27.45	Ø77.00	Ø76.96	Ø64.50	Ø65.00	Ø66.75	Ø71.23	Ø72.00	Ø76.00	1-2336396-1
2213805-X	2213748-X	7	4.35	27.45	Ø77.00	Ø76.96	Ø64.50	Ø65.00	Ø66.75	Ø71.23	Ø72.00	Ø76.00	2336396-1
REPRESENTATIVE SLEEVE P/N 5	REPRESENTATIVE COVER P/N 5	CONTACT POSITIONS	DIM T	DIM S	DIM Y	DIM X	DIM P	DIM N	DIM M MAX WITH SLEEVE	DIM M MAX W/OUT SLEEVE	DIM F	DIM E	PART NO.

THIS DRAWING IS A CONTROLLED DOCUMENT.

DIMENSIONS: mm

TOLERANCES UNLESS OTHERWISE SPECIFIED:
0 PLC ±-
1 PLC ±0.2
2 PLC ±0.13
3 PLC ±-
4 PLC ±-
ANGLES ±3°

MATERIAL - 1
FINISH - 2

DWN J.SHAFFER 03MAY2018
CHK M.MOSTOLLER 03MAY2018
APVD -
PRODUCT SPEC 108-32125
APPLICATION SPEC 114-32159
WEIGHT -

TE Connectivity

NAME BASE ASSEMBLY, LIGHT CONTROLLER, SLEEVE COMPATIBLE

SIZE A2 | CAGE CODE - | DRAWING NO C-2336396 | RESTRICTED TO -

CUSTOMER DRAWING | SCALE 2:1 | SHEET 1 OF 5 | REV A2

THIS DRAWING IS UNPUBLISHED. RELEASED FOR PUBLICATION 20
© COPYRIGHT 20 BY - ALL RIGHTS RESERVED.

REVISIONS

P	LTR	DESCRIPTION	DATE	DWN	APVD
	-	SEE SHEET 1	-	-	-

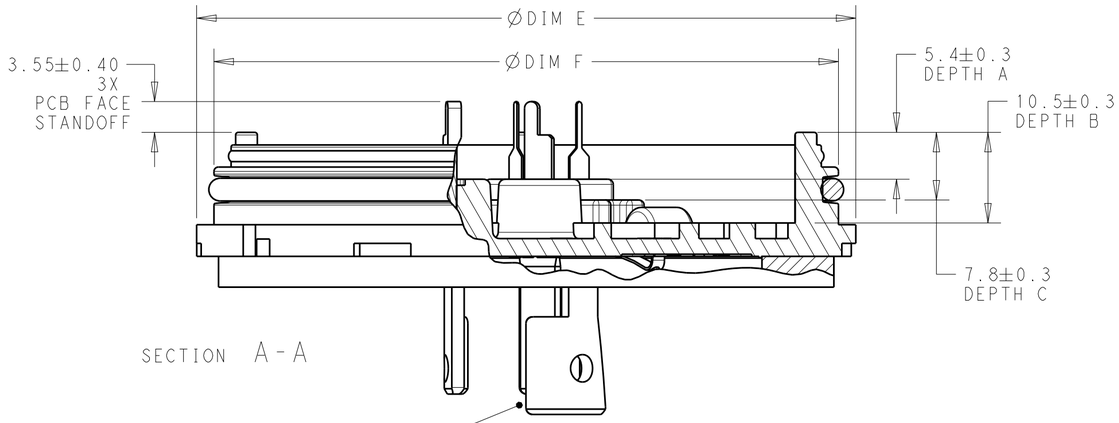

SECTION A-A

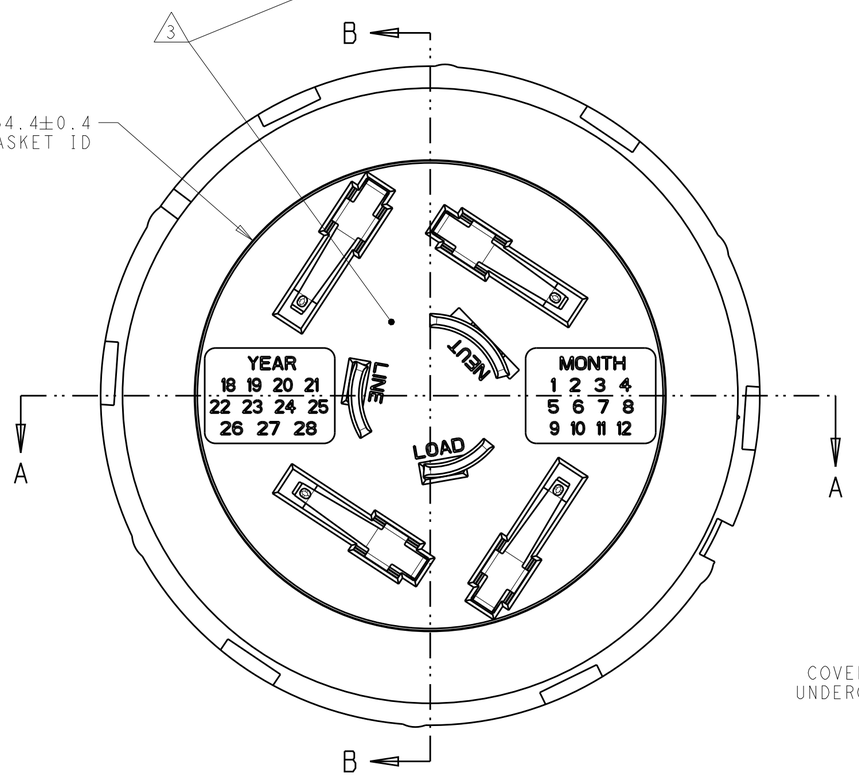

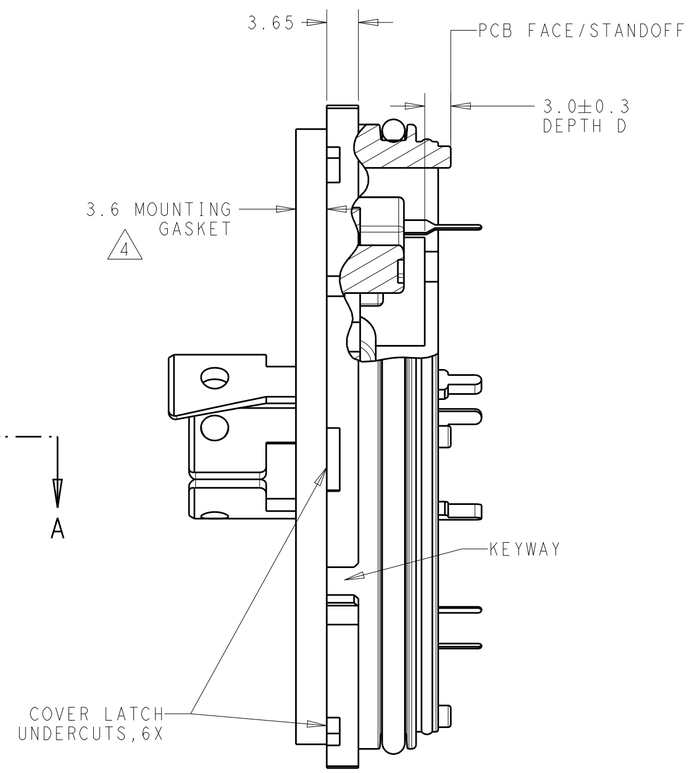

SECTION B-B

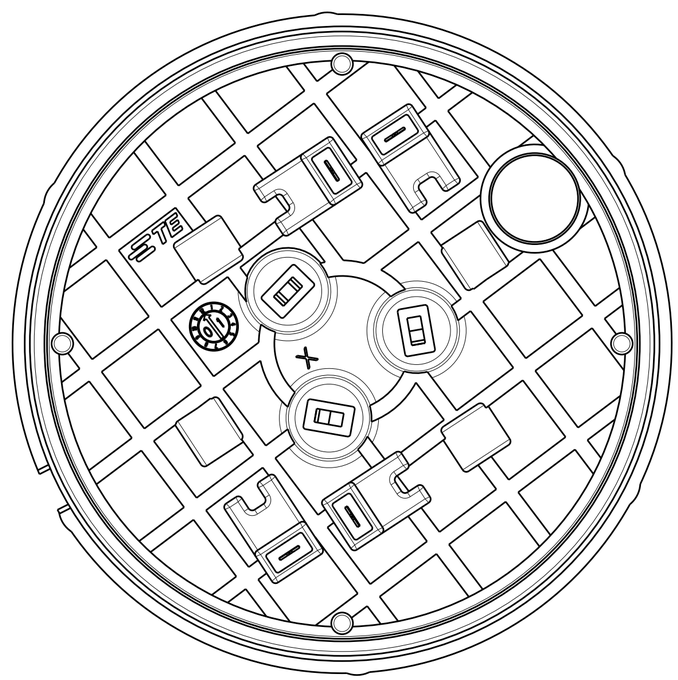

THIS DRAWING IS A CONTROLLED DOCUMENT.		DWN 03MAY2018 J.SHAFFER	TE Connectivity
DIMENSIONS: mm	TOLERANCES UNLESS OTHERWISE SPECIFIED: 0 PLC ±- 1 PLC ±0.2 2 PLC ±0.13 3 PLC ±- 4 PLC ±- ANGLES ±3°	CHK 03MAY2018 M.MOSTOLLER	NAME BASE ASSEMBLY, LIGHT CONTROLLER, SLEEVE COMPATIBLE
		APVD -	
		PRODUCT SPEC 108-32125	
		APPLICATION SPEC 114-32159	SIZE A2 / CAGE CODE - / DRAWING NO C-2336396 / RESTRICTED TO -
MATERIAL - -	FINISH - -	WEIGHT -	
		CUSTOMER DRAWING	SCALE 2:1 / SHEET 2 OF 5 / REV A2

1471-9 (3/13)

THIS DRAWING IS UNPUBLISHED. RELEASED FOR PUBLICATION 20
© COPYRIGHT 20 BY - ALL RIGHTS RESERVED.

REVISIONS

P	LTR	DESCRIPTION	DATE	DWN	APVD
	-	SEE SHEET 1	-	-	-

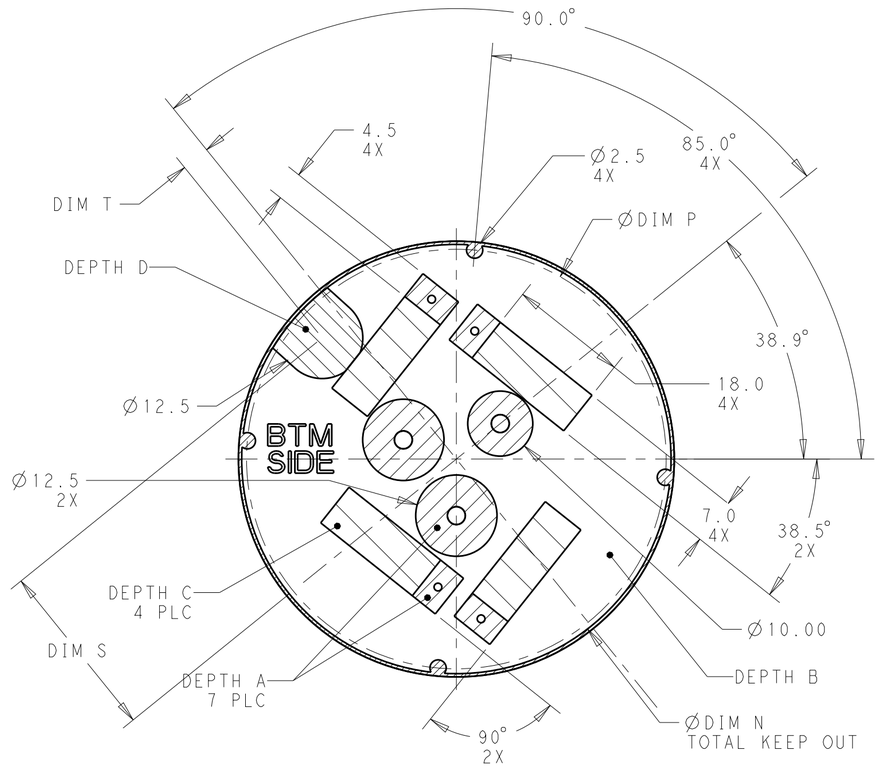

COMPONENT KEEP OUT AREAS
2336396-1 AND 2336396-2

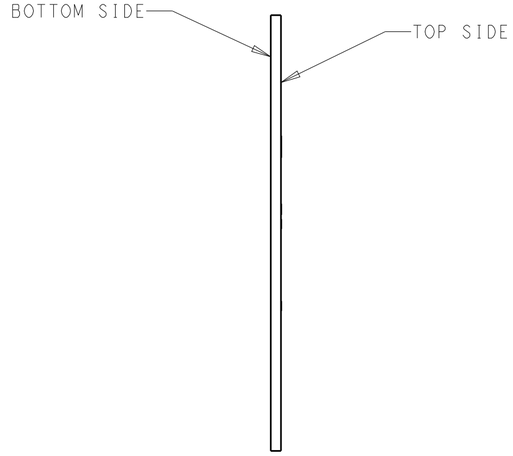

RECOMMENDED PCB
SCALE 3:2

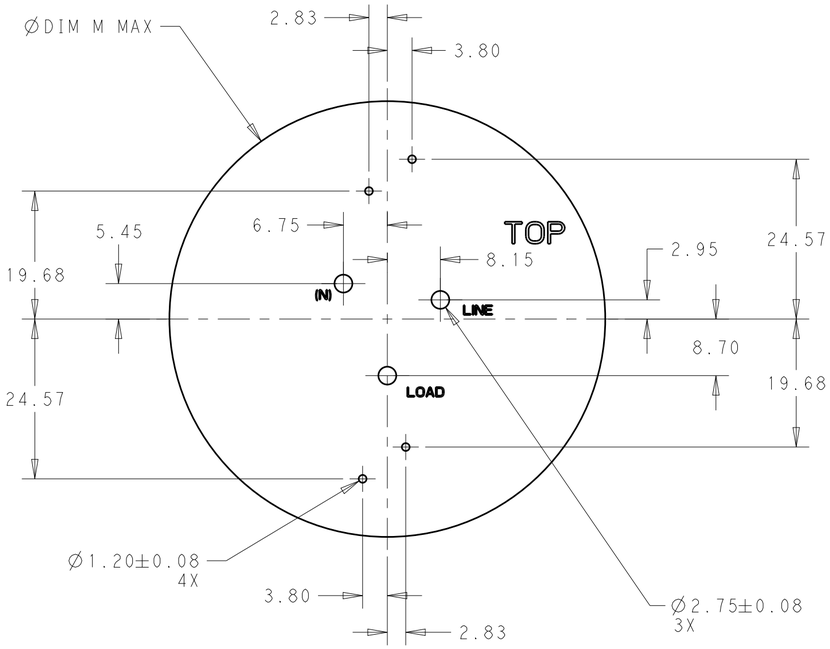

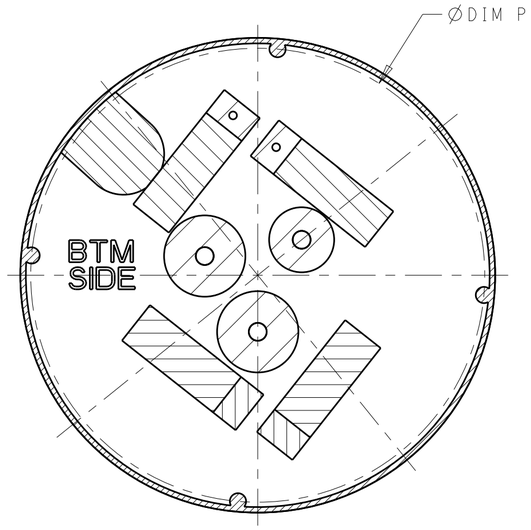

COMPONENT KEEP OUT AREAS
1-2336396-1 AND 1-2336396-2
SAME AS
2336396-1 AND 2336396-2
EXCEPT WHERE SHOWN

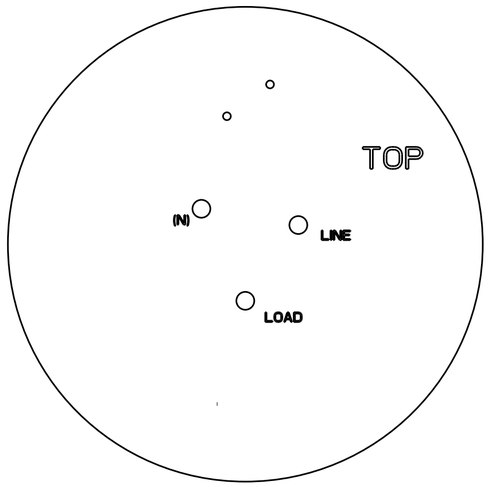

THIS DRAWING IS A CONTROLLED DOCUMENT.

DIMENSIONS: mm

TOLERANCES UNLESS OTHERWISE SPECIFIED:
0 PLC ±-
1 PLC ±0.2
2 PLC ±0.13
3 PLC ±-
4 PLC ±-
ANGLES ±3°

MATERIAL -
FINISH -

DWN J.SHAFFER 03MAY2018
CHK M.MOSTOLLER 03MAY2018
APVD -
PRODUCT SPEC 108-32125
APPLICATION SPEC 114-32159
WEIGHT -

TE Connectivity

NAME BASE ASSEMBLY, LIGHT CONTROLLER, SLEEVE COMPATIBLE

SIZE	CAGE CODE	DRAWING NO	RESTRICTED TO
A2	-	C-2336396	-

CUSTOMER DRAWING | SCALE 2:1 | SHEET 3 OF 5 | REV A2

1471-9 (3/13)

THIS DRAWING IS UNPUBLISHED. RELEASED FOR PUBLICATION 20
© COPYRIGHT 20 BY - ALL RIGHTS RESERVED.

REVISIONS

P	LTR	DESCRIPTION	DATE	DWN	APVD
	-	SEE SHEET 1	-	-	-

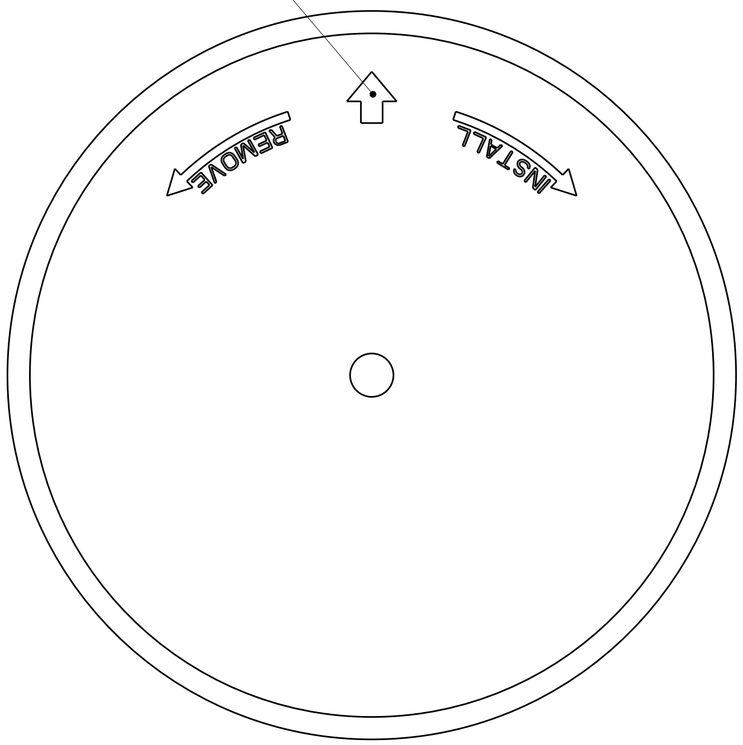

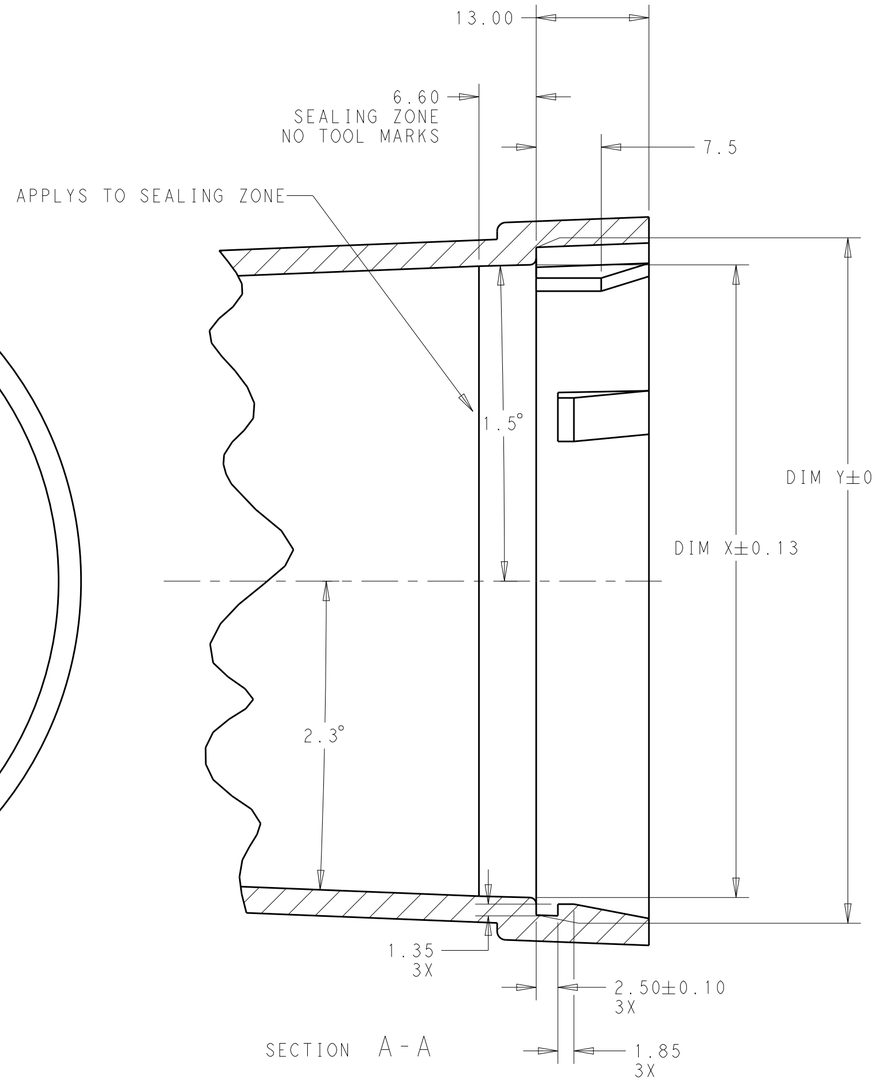

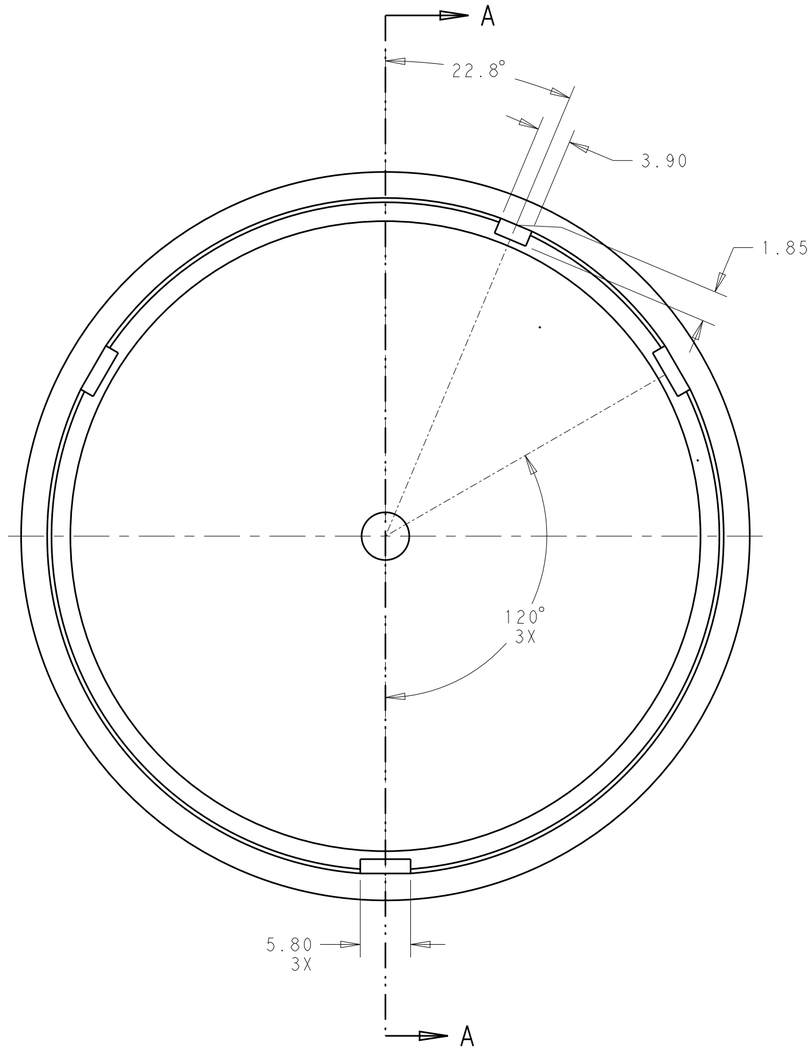

MATING COVER DIMENSIONS
FOR
76MM DIAMETER BASES
(2336396-1, 1-2336396-1)

THIS DRAWING IS A CONTROLLED DOCUMENT.

DIMENSIONS: mm

TOLERANCES UNLESS OTHERWISE SPECIFIED:
0 PLC ±-
1 PLC ±0.2
2 PLC ±0.13
3 PLC ±-
4 PLC ±-
ANGLES ±3°

MATERIAL -
FINISH -

DWN J.SHAFFER 03MAY2018
CHK M.MOSTOLLER 03MAY2018
APVD -
PRODUCT SPEC 108-32125
APPLICATION SPEC 114-32159
WEIGHT -

TE Connectivity

NAME BASE ASSEMBLY, LIGHT CONTROLLER, SLEEVE COMPATIBLE

SIZE	CAGE CODE	DRAWING NO	RESTRICTED TO
A2	-	C-2336396	-

CUSTOMER DRAWING | SCALE 2:1 | SHEET 4 OF 5 | REV A2

THIS DRAWING IS UNPUBLISHED. RELEASED FOR PUBLICATION 20
© COPYRIGHT 20 BY - ALL RIGHTS RESERVED.

REVISIONS

P	LTR	DESCRIPTION	DATE	DWN	APVD
	-	SEE SHEET 1	-	-	-

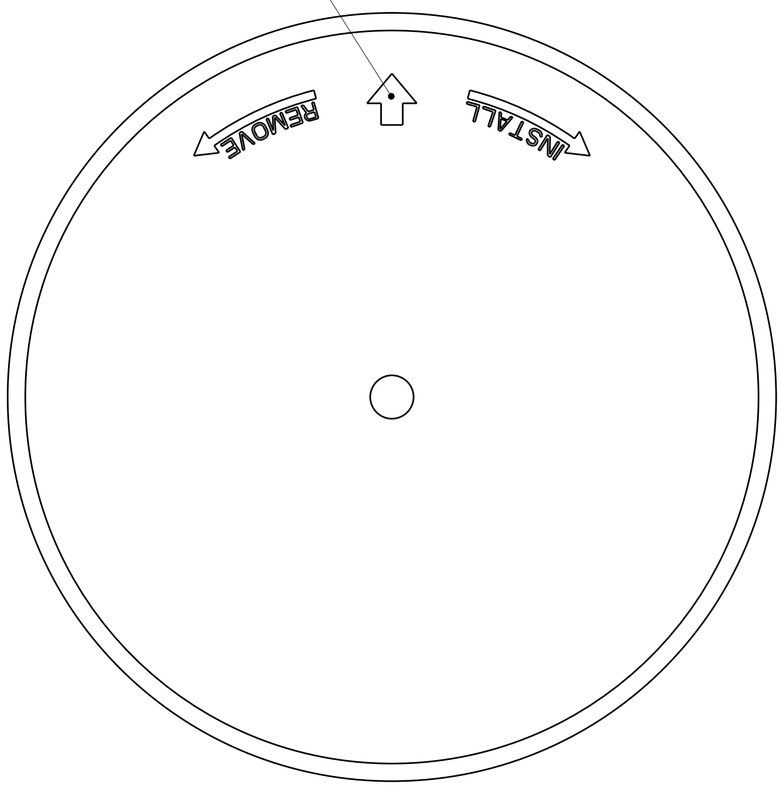

SCALE 2:1

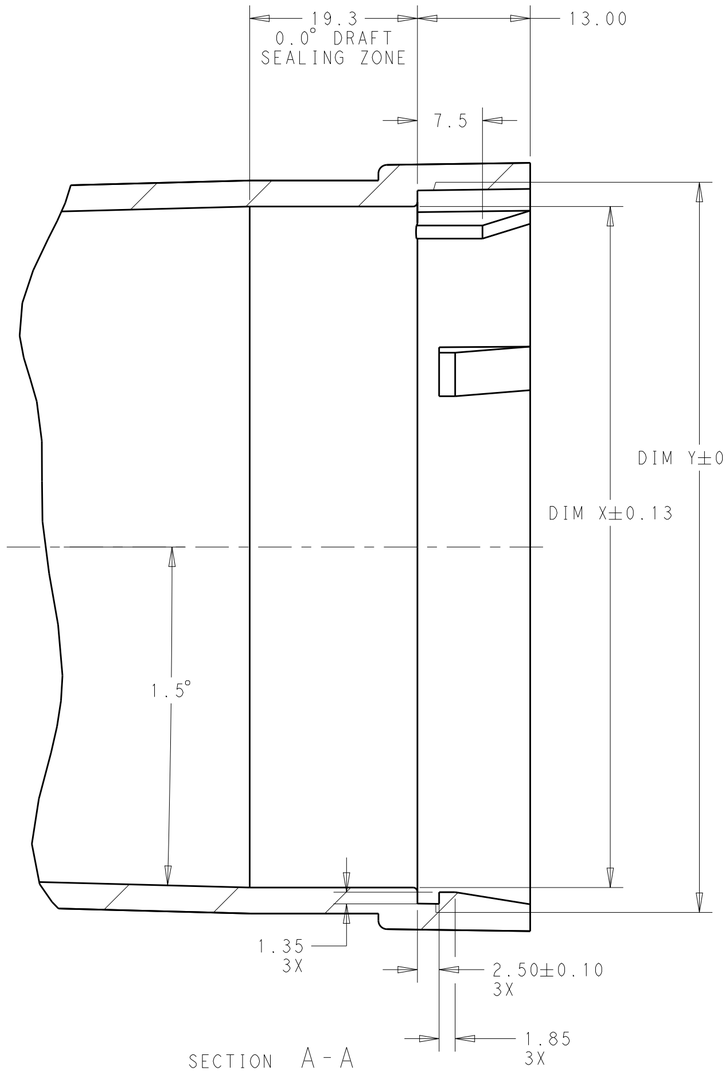

SECTION A-A

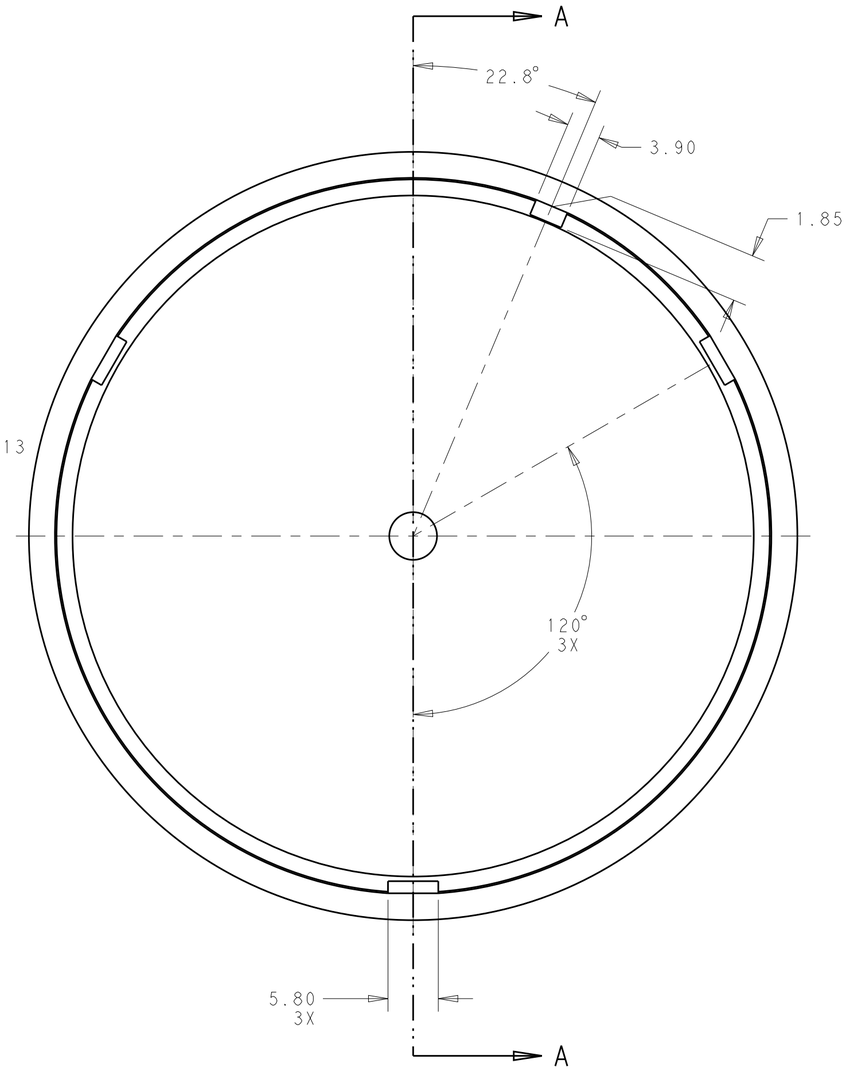

MATING COVER DIMENSIONS
FOR
81MM DIAMETER BASES

(2336396-2, 1-2336396-2)

THIS DRAWING IS A CONTROLLED DOCUMENT.

DIMENSIONS: mm

TOLERANCES UNLESS OTHERWISE SPECIFIED:

0 PLC	±-
1 PLC	±0.2
2 PLC	±0.13
3 PLC	±-
4 PLC	±-
ANGLES	±3°

MATERIAL - -

FINISH - -

DWN J.SHAFFER 03MAY2018
CHK M.MOSTOLLER 03MAY2018
APVD -
PRODUCT SPEC 108-32125
APPLICATION SPEC 114-32159
WEIGHT -

TE Connectivity

NAME BASE ASSEMBLY, LIGHT CONTROLLER, SLEEVE COMPATIBLE

SIZE	CAGE CODE	DRAWING NO	RESTRICTED TO
A2	-	C-2336396	-

CUSTOMER DRAWING | SCALE 2:1 | SHEET 5 OF 5 | REV A2

Компания «ЭлектроПласт» предлагает заключение долгосрочных отношений при поставках импортных электронных компонентов на взаимовыгодных условиях!

Наши преимущества:

- Оперативные поставки широкого спектра электронных компонентов отечественного и импортного производства напрямую от производителей и с крупнейших мировых складов;
- Поставка более 17-ти миллионов наименований электронных компонентов;
- Поставка сложных, дефицитных, либо снятых с производства позиций;
- Оперативные сроки поставки под заказ (от 5 рабочих дней);
- Экспресс доставка в любую точку России;
- Техническая поддержка проекта, помощь в подборе аналогов, поставка прототипов;
- Система менеджмента качества сертифицирована по Международному стандарту ISO 9001;
- Лицензия ФСБ на осуществление работ с использованием сведений, составляющих государственную тайну;
- Поставка специализированных компонентов (Xilinx, Altera, Analog Devices, Intersil, Interpoint, Microsemi, Aeroflex, Peregrine, Syfer, Eurofarad, Texas Instrument, Miteq, Cobham, E2V, MA-COM, Hittite, Mini-Circuits,General Dynamics и др.);

Помимо этого, одним из направлений компании «ЭлектроПласт» является направление «Источники питания». Мы предлагаем Вам помощь Конструкторского отдела:

- Подбор оптимального решения, техническое обоснование при выборе компонента;
- Подбор аналогов;
- Консультации по применению компонента;
- Поставка образцов и прототипов;
- Техническая поддержка проекта;
- Защита от снятия компонента с производства.

Как с нами связаться

Телефон: 8 (812) 309 58 32 (многоканальный)
Факс: 8 (812) 320-02-42
Электронная почта: org@eplast1.ru
Адрес: 198099, г. Санкт-Петербург, ул. Калинина, дом 2, корпус 4, литера А.