3. DC and Switching Characteristics for MAX V Devices

MV51003-1.2

This chapter covers the electrical and switching characteristics for MAX® V devices. Electrical characteristics include operating conditions and power consumptions. This chapter also describes the timing model and specifications.

You must consider the recommended DC and switching conditions described in this chapter to maintain the highest possible performance and reliability of the MAX V devices.

This chapter contains the following sections:

- "Operating Conditions" on page 3–1
- "Power Consumption" on page 3–10
- "Timing Model and Specifications" on page 3–10

Operating Conditions

Table 3–1 through Table 3–15 on page 3–9 list information about absolute maximum ratings, recommended operating conditions, DC electrical characteristics, and other specifications for MAX V devices.

Absolute Maximum Ratings

Table 3–1 lists the absolute maximum ratings for the MAX V device family.

Table 3–1. Absolute Maximum Ratings for MAX V Devices *(Note 1)*, *(2)*

Symbol	Parameter	Conditions	Minimum	Maximum	Unit
V_{CCINT}	Internal supply voltage	With respect to ground	–0.5	2.4	V
V_{CCIO}	I/O supply voltage	—	–0.5	4.6	V
V_I	DC input voltage	—	–0.5	4.6	V
I_{OUT}	DC output current, per pin	—	–25	25	mA
T_{STG}	Storage temperature	No bias	–65	150	°C
T_{AMB}	Ambient temperature	Under bias *(3)*	–65	135	°C
T_J	Junction temperature	TQFP and BGA packages under bias	—	135	°C

Notes to Table 3–1:

(1) For more information, refer to the *Operating Requirements for Altera Devices Data Sheet*.

(2) Conditions beyond those listed in Table 3–1 may cause permanent damage to a device. Additionally, device operation at the absolute maximum ratings for extended periods of time may have adverse affects on the device.

(3) For more information about "under bias" conditions, refer to Table 3–2.

© 2011 Altera Corporation. All rights reserved. ALTERA, ARRIA, CYCLONE, HARDCOPY, MAX, MEGACORE, NIOS, QUARTUS and STRATIX are Reg. U.S. Pat. & Tm. Off. and/or trademarks of Altera Corporation in the U.S. and other countries. All other trademarks and service marks are the property of their respective holders as described at www.altera.com/common/legal.html. Altera warrants performance of its semiconductor products to current specifications in accordance with Altera's standard warranty, but reserves the right to make changes to any products and services at any time without notice. Altera assumes no responsibility or liability arising out of the application or use of any information, product, or service described herein except as expressly agreed to in writing by Altera. Altera customers are advised to obtain the latest version of device specifications before relying on any published information and before placing orders for products or services.

Recommended Operating Conditions

Table 3–2 lists recommended operating conditions for the MAX V device family.

Table 3–2. Recommended Operating Conditions for MAX V Devices

Symbol	Parameter	Conditions	Minimum	Maximum	Unit
V_{CCINT} *(1)*	1.8-V supply voltage for internal logic and in-system programming (ISP)	MAX V devices	1.71	1.89	V
V_{CCIO} *(1)*	Supply voltage for I/O buffers, 3.3-V operation	—	3.00	3.60	V
	Supply voltage for I/O buffers, 2.5-V operation	—	2.375	2.625	V
	Supply voltage for I/O buffers, 1.8-V operation	—	1.71	1.89	V
	Supply voltage for I/O buffers, 1.5-V operation	—	1.425	1.575	V
	Supply voltage for I/O buffers, 1.2-V operation	—	1.14	1.26	V
V_I	Input voltage	*(2)*, *(3)*, *(4)*	–0.5	4.0	V
V_O	Output voltage	—	0	V_{CCIO}	V
T_J	Operating junction temperature	Commercial range	0	85	°C
		Industrial range	–40	100	°C
		Extended range *(5)*	–40	125	°C

Notes to Table 3–2:

(1) MAX V device ISP and/or user flash memory (UFM) programming using JTAG or logic array is not guaranteed outside the recommended operating conditions (for example, if brown-out occurs in the system during a potential write/program sequence to the UFM, Altera recommends that you read back the UFM contents and verify it against the intended write data).

(2) The minimum DC input is –0.5 V. During transitions, the inputs may undershoot to –2.0 V for input currents less than 100 mA and periods shorter than 20 ns.

(3) During transitions, the inputs may overshoot to the voltages shown below based on the input duty cycle. The DC case is equivalent to 100% duty cycle. For more information about 5.0-V tolerance, refer to the *Using MAX V Devices in Multi-Voltage Systems* chapter.

V_{IN}	Max. Duty Cycle
4.0 V	100% (DC)
4.1 V	90%
4.2 V	50%
4.3 V	30%
4.4 V	17%
4.5 V	10%

(4) All pins, including the clock, I/O, and JTAG pins, may be driven before V_{CCINT} and V_{CCIO} are powered.

(5) For the extended temperature range of 100 to 125°C, MAX V UFM programming (erase/write) is only supported using the JTAG interface. UFM programming using the logic array interface is not guaranteed in this range.

Programming/Erasure Specifications

Table 3–3 lists the programming/erasure specifications for the MAX V device family.

Table 3–3. Programming/Erasure Specifications for MAX V Devices

Parameter	Block	Minimum	Typical	Maximum	Unit
Erase and reprogram cycles	UFM	—	—	1000 *(1)*	Cycles
	Configuration flash memory (CFM)	—	—	100	Cycles

Note to Table 3–3:

(1) This value applies to the commercial grade devices. For the industrial grade devices, the value is 100 cycles.

DC Electrical Characteristics

Table 3–4 lists DC electrical characteristics for the MAX V device family.

Table 3–4. DC Electrical Characteristics for MAX V Devices *(Note 1)* (Part 1 of 2)

Symbol	Parameter	Conditions	Minimum	Typical	Maximum	Unit
I_I	Input pin leakage current	$V_I = V_{CCIO}$ max to 0 V *(2)*	–10	—	10	µA
I_{OZ}	Tri-stated I/O pin leakage current	$V_O = V_{CCIO}$ max to 0 V *(2)*	–10	—	10	µA
$I_{CCSTANDBY}$	V_{CCINT} supply current (standby) *(3)*	5M40Z, 5M80Z, 5M160Z, and 5M240Z (Commercial grade) *(4)*, *(5)*	—	25	90	µA
		5M240Z (Commercial grade) *(6)*	—	27	96	µA
		5M40Z, 5M80Z, 5M160Z, and 5M240Z (Industrial grade) *(5)*, *(7)*	—	25	139	µA
		5M240Z (Industrial grade) *(6)*	—	27	152	µA
		5M570Z (Commercial grade) *(4)*	—	27	96	µA
		5M570Z (Industrial grade) *(7)*	—	27	152	µA
		5M1270Z and 5M2210Z	—	2	—	mA
$V_{SCHMITT}$ *(8)*	Hysteresis for Schmitt trigger input *(9)*	V_{CCIO} = 3.3 V	—	400	—	mV
		V_{CCIO} = 2.5 V	—	190	—	mV
$I_{CCPOWERUP}$	V_{CCINT} supply current during power-up *(10)*	MAX V devices	—	—	40	mA
R_{PULLUP}	Value of I/O pin pull-up resistor during user mode and ISP	V_{CCIO} = 3.3 V *(11)*	5	—	25	kΩ
		V_{CCIO} = 2.5 V *(11)*	10	—	40	kΩ
		V_{CCIO} = 1.8 V *(11)*	25	—	60	kΩ
		V_{CCIO} = 1.5 V *(11)*	45	—	95	kΩ
		V_{CCIO} = 1.2 V *(11)*	80	—	130	kΩ

Table 3–4. DC Electrical Characteristics for MAX V Devices *(Note 1)* (Part 2 of 2)

Symbol	Parameter	Conditions	Minimum	Typical	Maximum	Unit
I_{PULLUP}	I/O pin pull-up resistor current when I/O is unprogrammed	—	—	—	300	µA
C_{IO}	Input capacitance for user I/O pin	—	—	—	8	pF
C_{GCLK}	Input capacitance for dual-purpose GCLK/user I/O pin	—	—	—	8	pF

Notes to Table 3–4:

(1) Typical values are for T_A = 25°C, V_{CCINT} = 1.8 V and V_{CCIO} = 1.2, 1.5, 1.8, 2.5, or 3.3 V.

(2) This value is specified for normal device operation. The value may vary during power-up. This applies to all V_{CCIO} settings (3.3, 2.5, 1.8, 1.5, and 1.2 V).

(3) V_I = ground, no load, and no toggling inputs.

(4) Commercial temperature ranges from 0°C to 85°C with the maximum current at 85°C.

(5) Not applicable to the T144 package of the 5M240Z device.

(6) Only applicable to the T144 package of the 5M240Z device.

(7) Industrial temperature ranges from –40°C to 100°C with the maximum current at 100°C.

(8) This value applies to commercial and industrial range devices. For extended temperature range devices, the $V_{SCHMITT}$ typical value is 300 mV for V_{CCIO} = 3.3 V and 120 mV for V_{CCIO} = 2.5 V.

(9) The `TCK` input is susceptible to high pulse glitches when the input signal fall time is greater than 200 ns for all I/O standards.

(10) This is a peak current value with a maximum duration of t_{CONFIG} time.

(11) Pin pull-up resistance values will lower if an external source drives the pin higher than V_{CCIO}.

Output Drive Characteristics

Figure 3–1 shows the typical drive strength characteristics of MAX V devices.

Figure 3–1. Output Drive Characteristics of MAX V Devices ***(Note 1)***

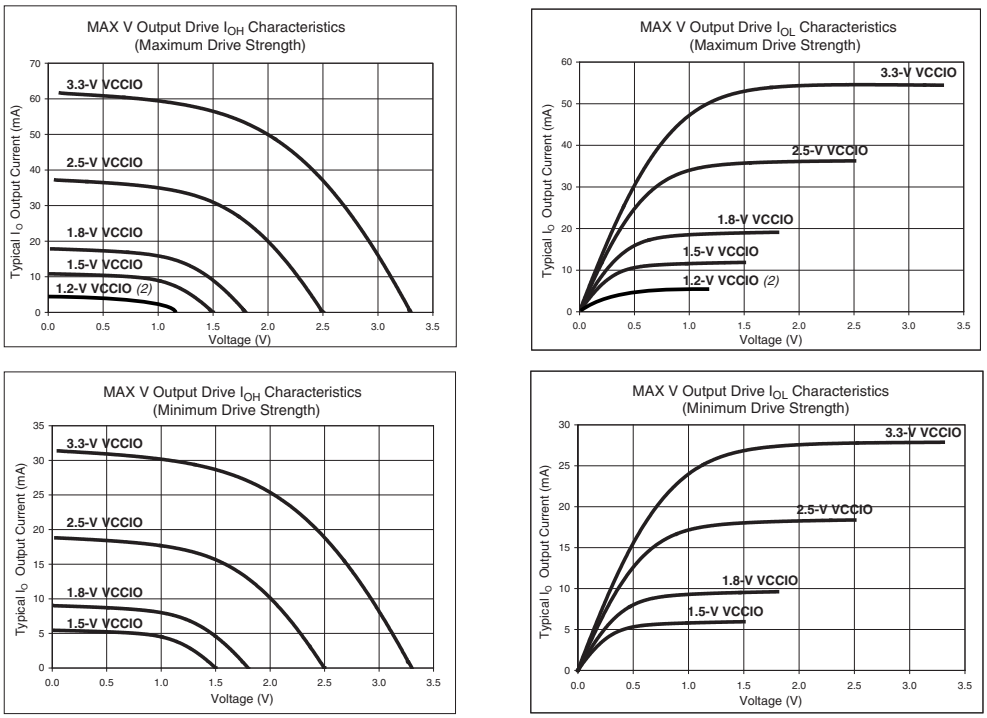

Notes to Figure 3–1:

(1) The DC output current per pin is subject to the absolute maximum rating of Table 3–1 on page 3–1.

(2) 1.2-V V_{CCIO} is only applicable to the maximum drive strength.

I/O Standard Specifications

Table 3–5 through Table 3–13 on page 3–8 list the I/O standard specifications for the MAX V device family.

Table 3–5. 3.3-V LVTTL Specifications for MAX V Devices

Symbol	Parameter	Conditions	Minimum	Maximum	Unit
V_{CCIO}	I/O supply voltage	—	3.0	3.6	V
V_{IH}	High-level input voltage	—	1.7	4.0	V
V_{IL}	Low-level input voltage	—	–0.5	0.8	V
V_{OH}	High-level output voltage	IOH = –4 mA *(1)*	2.4	—	V
V_{OL}	Low-level output voltage	IOL = 4 mA *(1)*	—	0.45	V

Note to Table 3–5:

(1) This specification is supported across all the programmable drive strength settings available for this I/O standard, as shown in the *MAX V Device Architecture* chapter.

Table 3–6. 3.3-V LVCMOS Specifications for MAX V Devices

Symbol	Parameter	Conditions	Minimum	Maximum	Unit
V_{CCIO}	I/O supply voltage	—	3.0	3.6	V
V_{IH}	High-level input voltage	—	1.7	4.0	V
V_{IL}	Low-level input voltage	—	–0.5	0.8	V
V_{OH}	High-level output voltage	V_{CCIO} = 3.0, IOH = –0.1 mA *(1)*	V_{CCIO} – 0.2	—	V
V_{OL}	Low-level output voltage	V_{CCIO} = 3.0, IOL = 0.1 mA *(1)*	—	0.2	V

Note to Table 3–6:

(1) This specification is supported across all the programmable drive strength settings available for this I/O standard, as shown in the *MAX V Device Architecture* chapter.

Table 3–7. 2.5-V I/O Specifications for MAX V Devices

Symbol	Parameter	Conditions	Minimum	Maximum	Unit
V_{CCIO}	I/O supply voltage	—	2.375	2.625	V
V_{IH}	High-level input voltage	—	1.7	4.0	V
V_{IL}	Low-level input voltage	—	–0.5	0.7	V
V_{OH}	High-level output voltage	IOH = –0.1 mA *(1)*	2.1	—	V
		IOH = –1 mA *(1)*	2.0	—	V
		IOH = –2 mA *(1)*	1.7	—	V
V_{OL}	Low-level output voltage	IOL = 0.1 mA *(1)*	—	0.2	V
		IOL = 1 mA *(1)*	—	0.4	V
		IOL = 2 mA *(1)*	—	0.7	V

Note to Table 3–7:

(1) This specification is supported across all the programmable drive strength settings available for this I/O standard, as shown in the *MAX V Device Architecture* chapter.

Table 3–8. 1.8-V I/O Specifications for MAX V Devices

Symbol	Parameter	Conditions	Minimum	Maximum	Unit
V_{CCIO}	I/O supply voltage	—	1.71	1.89	V
V_{IH}	High-level input voltage	—	0.65 × V_{CCIO}	2.25 *(2)*	V
V_{IL}	Low-level input voltage	—	–0.3	0.35 × V_{CCIO}	V
V_{OH}	High-level output voltage	IOH = –2 mA *(1)*	V_{CCIO} – 0.45	—	V
V_{OL}	Low-level output voltage	IOL = 2 mA *(1)*	—	0.45	V

Notes to Table 3–8:

(1) This specification is supported across all the programmable drive strength settings available for this I/O standard, as shown in the *MAX V Device Architecture* chapter.

(2) This maximum V_{IH} reflects the JEDEC specification. The MAX V input buffer can tolerate a V_{IH} maximum of 4.0, as specified by the V_I parameter in Table 3–2 on page 3–2.

Table 3–9. 1.5-V I/O Specifications for MAX V Devices

Symbol	Parameter	Conditions	Minimum	Maximum	Unit
V_{CCIO}	I/O supply voltage	—	1.425	1.575	V
V_{IH}	High-level input voltage	—	0.65 × V_{CCIO}	V_{CCIO} + 0.3 *(2)*	V
V_{IL}	Low-level input voltage	—	–0.3	0.35 × V_{CCIO}	V
V_{OH}	High-level output voltage	IOH = –2 mA *(1)*	0.75 × V_{CCIO}	—	V
V_{OL}	Low-level output voltage	IOL = 2 mA *(1)*	—	0.25 × V_{CCIO}	V

Notes to Table 3–9:

(1) This specification is supported across all the programmable drive strength settings available for this I/O standard, as shown in the *MAX V Device Architecture* chapter.

(2) This maximum V_{IH} reflects the JEDEC specification. The MAX V input buffer can tolerate a V_{IH} maximum of 4.0, as specified by the V_I parameter in Table 3–2 on page 3–2.

Table 3–10. 1.2-V I/O Specifications for MAX V Devices

Symbol	Parameter	Conditions	Minimum	Maximum	Unit
V_{CCIO}	I/O supply voltage	—	1.14	1.26	V
V_{IH}	High-level input voltage	—	0.8 × V_{CCIO}	V_{CCIO} + 0.3	V
V_{IL}	Low-level input voltage	—	–0.3	0.25 × V_{CCIO}	V
V_{OH}	High-level output voltage	IOH = –2 mA *(1)*	0.75 × V_{CCIO}	—	V
V_{OL}	Low-level output voltage	IOL = 2 mA *(1)*	—	0.25 × V_{CCIO}	V

Note to Table 3–10:

(1) This specification is supported across all the programmable drive strength settings available for this I/O standard, as shown in the *MAX V Device Architecture* chapter.

Table 3–11. 3.3-V PCI Specifications for MAX V Devices *(Note 1)*

Symbol	Parameter	Conditions	Minimum	Typical	Maximum	Unit
V_{CCIO}	I/O supply voltage	—	3.0	3.3	3.6	V
V_{IH}	High-level input voltage	—	0.5 × V_{CCIO}	—	V_{CCIO} + 0.5	V
V_{IL}	Low-level input voltage	—	–0.5	—	0.3 × V_{CCIO}	V
V_{OH}	High-level output voltage	IOH = –500 µA	0.9 × V_{CCIO}	—	—	V
V_{OL}	Low-level output voltage	IOL = 1.5 mA	—	—	0.1 × V_{CCIO}	V

Note to Table 3–11:

(1) 3.3-V PCI I/O standard is only supported in Bank 3 of the 5M1270Z and 5M2210Z devices.

Table 3–12. LVDS Specifications for MAX V Devices *(Note 1)*

Symbol	Parameter	Conditions	Minimum	Typical	Maximum	Unit
V_{CCIO}	I/O supply voltage	—	2.375	2.5	2.625	V
V_{OD}	Differential output voltage swing	—	247	—	600	mV
V_{OS}	Output offset voltage	—	1.125	1.25	1.375	V

Note to Table 3–12:

(1) Supports emulated LVDS output using a three-resistor network (LVDS_E_3R).

Table 3–13. RSDS Specifications for MAX V Devices *(Note 1)*

Symbol	Parameter	Conditions	Minimum	Typical	Maximum	Unit
V_{CCIO}	I/O supply voltage	—	2.375	2.5	2.625	V
V_{OD}	Differential output voltage swing	—	247	—	600	mV
V_{OS}	Output offset voltage	—	1.125	1.25	1.375	V

Note to Table 3–13:

(1) Supports emulated RSDS output using a three-resistor network (RSDS_E_3R).

Bus Hold Specifications

Table 3–14 lists the bus hold specifications for the MAX V device family.

Table 3–14. Bus Hold Specifications for MAX V Devices

Parameter	Conditions	V_{CCIO} Level										Unit
		1.2 V		1.5 V		1.8 V		2.5 V		3.3 V		
		Min	Max	Min	Max	Min	Max	Min	Max	Min	Max	
Low sustaining current	$V_{IN} > V_{IL}$ (maximum)	10	—	20	—	30	—	50	—	70	—	µA
High sustaining current	$V_{IN} < V_{IH}$ (minimum)	–10	—	–20	—	–30	—	–50	—	–70	—	µA
Low overdrive current	$0 V < V_{IN} < V_{CCIO}$	—	130	—	160	—	200	—	300	—	500	µA
High overdrive current	$0 V < V_{IN} < V_{CCIO}$	—	–130	—	–160	—	–200	—	–300	—	–500	µA

Power-Up Timing

Table 3–15 lists the power-up timing characteristics for the MAX V device family.

Table 3–15. Power-Up Timing for MAX V Devices

Symbol	Parameter	Device	Temperature Range	Min	Typ	Max	Unit
t_{CONFIG}	The amount of time from when minimum V_{CCINT} is reached until the device enters user mode *(1)*	5M40Z	Commercial and industrial	—	—	200	µs
			Extended	—	—	300	µs
		5M80Z	Commercial and industrial	—	—	200	µs
			Extended	—	—	300	µs
		5M160Z	Commercial and industrial	—	—	200	µs
			Extended	—	—	300	µs
		5M240Z *(2)*	Commercial and industrial	—	—	200	µs
			Extended	—	—	300	µs
		5M240Z *(3)*	Commercial and industrial	—	—	300	µs
			Extended	—	—	400	µs
		5M570Z	Commercial and industrial	—	—	300	µs
			Extended	—	—	400	µs
		5M1270Z *(4)*	Commercial and industrial	—	—	300	µs
			Extended	—	—	400	µs
		5M1270Z *(5)*	Commercial and industrial	—	—	450	µs
			Extended	—	—	500	µs
		5M2210Z	Commercial and industrial	—	—	450	µs
			Extended	—	—	500	µs

Notes to Table 3–15:

(1) For more information about power-on reset (POR) trigger voltage, refer to the *Hot Socketing and Power-On Reset in MAX V Devices* chapter.
(2) Not applicable to the T144 package of the 5M240Z device.
(3) Only applicable to the T144 package of the 5M240Z device.
(4) Not applicable to the F324 package of the 5M1270Z device.
(5) Only applicable to the F324 package of the 5M1270Z device.

Power Consumption

You can use the Altera® PowerPlay Early Power Estimator and PowerPlay Power Analyzer to estimate the device power.

For more information about these power analysis tools, refer to the *PowerPlay Early Power Estimator for Altera CPLDs User Guide* and the *PowerPlay Power Analysis* chapter in volume 3 of the *Quartus II Handbook.*

Timing Model and Specifications

MAX V devices timing can be analyzed with the Altera Quartus® II software, a variety of industry-standard EDA simulators and timing analyzers, or with the timing model shown in Figure 3–2.

MAX V devices have predictable internal delays that allow you to determine the worst-case timing of any design. The software provides timing simulation, point-to-point delay prediction, and detailed timing analysis for device-wide performance evaluation.

Figure 3–2. Timing Model for MAX V Devices

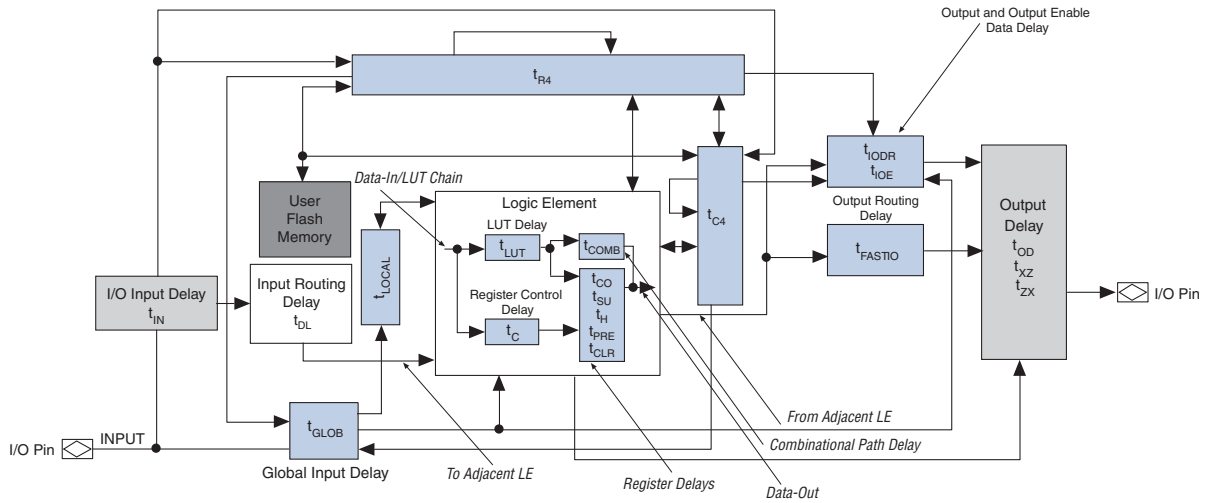

You can derive the timing characteristics of any signal path from the timing model and parameters of a particular device. You can calculate external timing parameters, which represent pin-to-pin timing delays, as the sum of the internal parameters.

For more information, refer to *AN629: Understanding Timing in Altera CPLDs*.

Preliminary and Final Timing

This section describes the performance, internal, external, and UFM timing specifications. All specifications are representative of the worst-case supply voltage and junction temperature conditions.

Timing models can have either preliminary or final status. The Quartus II software issues an informational message during the design compilation if the timing models are preliminary. Table 3–16 lists the status of the MAX V device timing models.

Preliminary status means the timing model is subject to change. Initially, timing numbers are created using simulation results, process data, and other known parameters. These tests are used to make the preliminary numbers as close to the actual timing parameters as possible.

Final timing numbers are based on actual device operation and testing. These numbers reflect the actual performance of the device under the worst-case voltage and junction temperature conditions.

Table 3–16. Timing Model Status for MAX V Devices

Device	Final
5M40Z	✓
5M80Z	✓
5M160Z	✓
5M240Z	✓
5M570Z	✓
5M1270Z	✓
5M2210Z	✓

Performance

Table 3–17 lists the MAX V device performance for some common designs. All performance values were obtained with the Quartus II software compilation of megafunctions.

Table 3–17. Device Performance for MAX V Devices (Part 1 of 2)

Resource Used	Design Size and Function	Resources Used			Performance				Unit
					5M40Z/ 5M80Z/ 5M160Z/ 5M240Z/ 5M570Z		5M1270Z/ 5M2210Z		
		Mode	LEs	UFM Blocks	C4	C5, I5	C4	C5, I5	
LE	16-bit counter *(1)*	—	16	0	184.1	118.3	247.5	201.1	MHz
	64-bit counter *(1)*	—	64	0	83.2	80.5	154.8	125.8	MHz
	16-to-1 multiplexer	—	11	0	17.4	20.4	8.0	9.3	ns
	32-to-1 multiplexer	—	24	0	12.5	25.3	9.0	11.4	ns
	16-bit XOR function	—	5	0	9.0	16.1	6.6	8.2	ns
	16-bit decoder with single address line	—	5	0	9.2	16.1	6.6	8.2	ns

Table 3–17. Device Performance for MAX V Devices (Part 2 of 2)

Resource Used	Design Size and Function	Resources Used			Performance				Unit
					5M40Z/ 5M80Z/ 5M160Z/ 5M240Z/ 5M570Z		5M1270Z/ 5M2210Z		
		Mode	LEs	UFM Blocks	C4	C5, I5	C4	C5, I5	
UFM	512 × 16	None	3	1	10.0	10.0	10.0	10.0	MHz
	512 × 16	SPI *(2)*	37	1	9.7	9.7	8.0	8.0	MHz
	512 × 8	Parallel *(3)*	73	1	*(4)*	*(4)*	*(4)*	*(4)*	MHz
	512 × 16	I^2C *(3)*	142	1	100 *(5)*	100 *(5)*	100 *(5)*	100 *(5)*	kHz

Notes to Table 3–17:

(1) This design is a binary loadable up counter.

(2) This design is configured for read-only operation in Extended mode. Read and write ability increases the number of logic elements (LEs) used.

(3) This design is configured for read-only operation. Read and write ability increases the number of LEs used.

(4) This design is asynchronous.

(5) The I^2C megafunction is verified in hardware up to 100-kHz serial clock line rate.

Internal Timing Parameters

Internal timing parameters are specified on a speed grade basis independent of device density. Table 3–18 through Table 3–25 on page 3–19 list the MAX V device internal timing microparameters for LEs, input/output elements (IOEs), UFM blocks, and MultiTrack interconnects.

For more information about each internal timing microparameters symbol, refer to *AN629: Understanding Timing in Altera CPLDs*.

Table 3–18. LE Internal Timing Microparameters for MAX V Devices (Part 1 of 2)

Symbol	Parameter	5M40Z/ 5M80Z/ 5M160Z/ 5M240Z/ 5M570Z				5M1270Z/ 5M2210Z				Unit
		C4		C5, I5		C4		C5, I5		
		Min	Max	Min	Max	Min	Max	Min	Max	
t_{LUT}	LE combinational look-up table (LUT) delay	—	1,215	—	2,247	—	742	—	914	ps
t_{COMB}	Combinational path delay	—	243	—	309	—	192	—	236	ps
t_{CLR}	LE register clear delay	401	—	545	—	309	—	381	—	ps
t_{PRE}	LE register preset delay	401	—	545	—	309	—	381	—	ps
t_{SU}	LE register setup time before clock	260	—	321	—	271	—	333	—	ps
t_H	LE register hold time after clock	0	—	0	—	0	—	0	—	ps
t_{CO}	LE register clock-to-output delay	—	380	—	494	—	305	—	376	ps

Table 3–18. LE Internal Timing Microparameters for MAX V Devices (Part 2 of 2)

Symbol	Parameter	5M40Z/ 5M80Z/ 5M160Z/ 5M240Z/ 5M570Z				5M1270Z/ 5M2210Z				Unit
		C4		C5, I5		C4		C5, I5		
		Min	Max	Min	Max	Min	Max	Min	Max	
t_{CLKHL}	Minimum clock high or low time	253	—	339	—	216	—	266	—	ps
t_C	Register control delay	—	1,356	—	1,741	—	1,114	—	1,372	ps

Table 3–19. IOE Internal Timing Microparameters for MAX V Devices

Symbol	Parameter	5M40Z/ 5M80Z/ 5M160Z/ 5M240Z/ 5M570Z				5M1270Z/ 5M2210Z				Unit
		C4		C5, I5		C4		C5, I5		
		Min	Max	Min	Max	Min	Max	Min	Max	
t_{FASTIO}	Data output delay from adjacent LE to I/O block	—	170	—	428	—	207	—	254	ps
t_{IN}	I/O input pad and buffer delay	—	907	—	986	—	920	—	1,132	ps
t_{GLOB} *(1)*	I/O input pad and buffer delay used as global signal pin	—	2,261	—	3,322	—	1,974	—	2,430	ps
t_{IOE}	Internally generated output enable delay	—	530	—	1,410	—	374	—	460	ps
t_{DL}	Input routing delay	—	318	—	509	—	291	—	358	ps
t_{OD} *(2)*	Output delay buffer and pad delay	—	1,319	—	1,543	—	1,383	—	1,702	ps
t_{XZ} *(3)*	Output buffer disable delay	—	1,045	—	1,276	—	982	—	1,209	ps
t_{ZX} *(4)*	Output buffer enable delay	—	1,160	—	1,353	—	1,303	—	1,604	ps

Notes to Table 3–19:

(1) Delay numbers for t_{GLOB} differ for each device density and speed grade. The delay numbers for t_{GLOB}, shown in Table 3–19, are based on a 5M240Z device target.

(2) For more information about delay adders associated with different I/O standards, drive strengths, and slew rates, refer to Table 3–34 on page 3–24 and Table 3–35 on page 3–25.

(3) For more information about t_{XZ} delay adders associated with different I/O standards, drive strengths, and slew rates, refer to Table 3–22 on page 3–15 and Table 3–23 on page 3–15.

(4) For more information about t_{ZX} delay adders associated with different I/O standards, drive strengths, and slew rates, refer to Table 3–20 on page 3–14 and Table 3–21 on page 3–14.

Table 3–20 through Table 3–23 list the adder delays for t_{ZX} and t_{XZ} microparameters when using an I/O standard other than 3.3-V LVTTL with 16 mA drive strength.

Table 3–20. t_{ZX} IOE Microparameter Adders for Fast Slew Rate for MAX V Devices

Standard		5M40Z/ 5M80Z/ 5M160Z/ 5M240Z/ 5M570Z				5M1270Z/ 5M2210Z				Unit
		C4		C5, I5		C4		C5, I5		
		Min	Max	Min	Max	Min	Max	Min	Max	
3.3-V LVTTL	16 mA	—	0	—	0	—	0	—	0	ps
	8 mA	—	72	—	74	—	101	—	125	ps
3.3-V LVCMOS	8 mA	—	0	—	0	—	0	—	0	ps
	4 mA	—	72	—	74	—	101	—	125	ps
2.5-V LVTTL / LVCMOS	14 mA	—	126	—	127	—	155	—	191	ps
	7 mA	—	196	—	197	—	545	—	671	ps
1.8-V LVTTL / LVCMOS	6 mA	—	608	—	610	—	721	—	888	ps
	3 mA	—	681	—	685	—	2012	—	2477	ps
1.5-V LVCMOS	4 mA	—	1162	—	1157	—	1590	—	1957	ps
	2 mA	—	1245	—	1244	—	3269	—	4024	ps
1.2-V LVCMOS	3 mA	—	1889	—	1856	—	2860	—	3520	ps
3.3-V PCI	20 mA	—	72	—	74	—	–18	—	–22	ps
LVDS	—	—	126	—	127	—	155	—	191	ps
RSDS	—	—	126	—	127	—	155	—	191	ps

Table 3–21. t_{ZX} IOE Microparameter Adders for Slow Slew Rate for MAX V Devices

Standard		5M40Z/ 5M80Z/ 5M160Z/ 5M240Z/ 5M570Z				5M1270Z/ 5M2210Z				Unit
		C4		C5, I5		C4		C5, I5		
		Min	Max	Min	Max	Min	Max	Min	Max	
3.3-V LVTTL	16 mA	—	5,951	—	6,063	—	6,012	—	5,743	ps
	8 mA	—	6,534	—	6,662	—	8,785	—	8,516	ps
3.3-V LVCMOS	8 mA	—	5,951	—	6,063	—	6,012	—	5,743	ps
	4 mA	—	6,534	—	6,662	—	8,785	—	8,516	ps
2.5-V LVTTL / LVCMOS	14 mA	—	9,110	—	9,237	—	10,072	—	9,803	ps
	7 mA	—	9,830	—	9,977	—	12,945	—	12,676	ps
1.8-V LVTTL / LVCMOS	6 mA	—	21,800	—	21,787	—	21,185	—	20,916	ps
	3 mA	—	23,020	—	23,037	—	24,597	—	24,328	ps
1.5-V LVCMOS	4 mA	—	39,120	—	39,067	—	34,517	—	34,248	ps
	2 mA	—	40,670	—	40,617	—	39,717	—	39,448	ps
1.2-V LVCMOS	3 mA	—	69,505	—	70,461	—	55,800	—	55,531	ps
3.3-V PCI	20 mA	—	6,534	—	6,662	—	35	—	44	ps

Table 3–22. t_{XZ} IOE Microparameter Adders for Fast Slew Rate for MAX V Devices

Standard		5M40Z/ 5M80Z/ 5M160Z/ 5M240Z/ 5M570Z				5M1270Z/ 5M2210Z				Unit
		C4		C5, I5		C4		C5, I5		
		Min	Max	Min	Max	Min	Max	Min	Max	
3.3-V LVTTL	16 mA	—	0	—	0	—	0	—	0	ps
	8 mA	—	–69	—	–69	—	–74	—	–91	ps
3.3-V LVCMOS	8 mA	—	0	—	0	—	0	—	0	ps
	4 mA	—	–69	—	–69	—	–74	—	–91	ps
2.5-V LVTTL / LVCMOS	14 mA	—	–7	—	–10	—	–46	—	–56	ps
	7 mA	—	–66	—	–69	—	–82	—	–101	ps
1.8-V LVTTL / LVCMOS	6 mA	—	45	—	37	—	–7	—	–8	ps
	3 mA	—	34	—	25	—	119	—	147	ps
1.5-V LVCMOS	4 mA	—	166	—	155	—	339	—	418	ps
	2 mA	—	190	—	179	—	464	—	571	ps
1.2-V LVCMOS	3 mA	—	300	—	283	—	817	—	1,006	ps
3.3-V PCI	20 mA	—	–69	—	–69	—	80	—	99	ps
LVDS	—	—	–7	—	–10	—	–46	—	–56	ps
RSDS	—	—	–7	—	–10	—	–46	—	–56	ps

Table 3–23. t_{XZ} IOE Microparameter Adders for Slow Slew Rate for MAX V Devices

Standard		5M40Z/ 5M80Z/ 5M160Z/ 5M240Z/ 5M570Z				5M1270Z/ 5M2210Z				Unit
		C4		C5, I5		C4		C5, I5		
		Min	Max	Min	Max	Min	Max	Min	Max	
3.3-V LVTTL	16 mA	—	171	—	174	—	73	—	–132	ps
	8 mA	—	112	—	116	—	758	—	553	ps
3.3-V LVCMOS	8 mA	—	171	—	174	—	73	—	–132	ps
	4 mA	—	112	—	116	—	758	—	553	ps
2.5-V LVTTL / LVCMOS	14 mA	—	213	—	213	—	32	—	–173	ps
	7 mA	—	166	—	166	—	714	—	509	ps
1.8-V LVTTL / LVCMOS	6 mA	—	441	—	438	—	96	—	–109	ps
	3 mA	—	496	—	494	—	963	—	758	ps
1.5-V LVCMOS	4 mA	—	765	—	755	—	238	—	33	ps
	2 mA	—	903	—	897	—	1,319	—	1,114	ps
1.2-V LVCMOS	3 mA	—	1,159	—	1,130	—	400	—	195	ps
3.3-V PCI	20 mA	—	112	—	116	—	303	—	373	ps

The default slew rate setting for MAX V devices in the Quartus II design software is "fast".

Table 3–24. UFM Block Internal Timing Microparameters for MAX V Devices (Part 1 of 2)

Symbol	Parameter	5M40Z/ 5M80Z/ 5M160Z/ 5M240Z/ 5M570Z				5M1270Z/ 5M2210Z				Unit
		C4		C5, I5		C4		C5, I5		
		Min	Max	Min	Max	Min	Max	Min	Max	
t_{ACLK}	Address register clock period	100	—	100	—	100	—	100	—	ns
t_{ASU}	Address register shift signal setup to address register clock	20	—	20	—	20	—	20	—	ns
t_{AH}	Address register shift signal hold to address register clock	20	—	20	—	20	—	20	—	ns
t_{ADS}	Address register data in setup to address register clock	20	—	20	—	20	—	20	—	ns
t_{ADH}	Address register data in hold from address register clock	20	—	20	—	20	—	20	—	ns
t_{DCLK}	Data register clock period	100	—	100	—	100	—	100	—	ns
t_{DSS}	Data register shift signal setup to data register clock	60	—	60	—	60	—	60	—	ns
t_{DSH}	Data register shift signal hold from data register clock	20	—	20	—	20	—	20	—	ns
t_{DDS}	Data register data in setup to data register clock	20	—	20	—	20	—	20	—	ns
t_{DDH}	Data register data in hold from data register clock	20	—	20	—	20	—	20	—	ns
t_{DP}	Program signal to data clock hold time	0	—	0	—	0	—	0	—	ns
t_{PB}	Maximum delay between program rising edge to UFM `busy` signal rising edge	—	960	—	960	—	960	—	960	ns
t_{BP}	Minimum delay allowed from UFM `busy` signal going low to program signal going low	20	—	20	—	20	—	20	—	ns
t_{PPMX}	Maximum length of `busy` pulse during a program	—	100	—	100	—	100	—	100	µs

Table 3–24. UFM Block Internal Timing Microparameters for MAX V Devices (Part 2 of 2)

Symbol	Parameter	5M40Z/ 5M80Z/ 5M160Z/ 5M240Z/ 5M570Z				5M1270Z/ 5M2210Z				Unit
		C4		C5, I5		C4		C5, I5		
		Min	Max	Min	Max	Min	Max	Min	Max	
t_{AE}	Minimum `erase` signal to address clock hold time	0	—	0	—	0	—	0	—	ns
t_{EB}	Maximum delay between the `erase` rising edge to the UFM `busy` signal rising edge	—	960	—	960	—	960	—	960	ns
t_{BE}	Minimum delay allowed from the UFM `busy` signal going low to `erase` signal going low	20	—	20	—	20	—	20	—	ns
t_{EPMX}	Maximum length of `busy` pulse during an erase	—	500	—	500	—	500	—	500	ms
t_{DCO}	Delay from data register clock to data register output	—	5	—	5	—	5	—	5	ns
t_{OE}	Delay from `OSC_ENA` signal reaching UFM to rising clock of `OSC` leaving the UFM	180	—	180	—	180	—	180	—	ns
t_{RA}	Maximum read access time	—	65	—	65	—	65	—	65	ns
t_{OSCS}	Maximum delay between the `OSC_ENA` rising edge to the `erase/program` signal rising edge	250	—	250	—	250	—	250	—	ns
t_{OSCH}	Minimum delay allowed from the `erase/program` signal going low to `OSC_ENA` signal going low	250	—	250	—	250	—	250	—	ns

Figure 3–3 through Figure 3–5 show the read, program, and erase waveforms for UFM block timing parameters listed in Table 3–24.

Figure 3–3. UFM Read Waveform

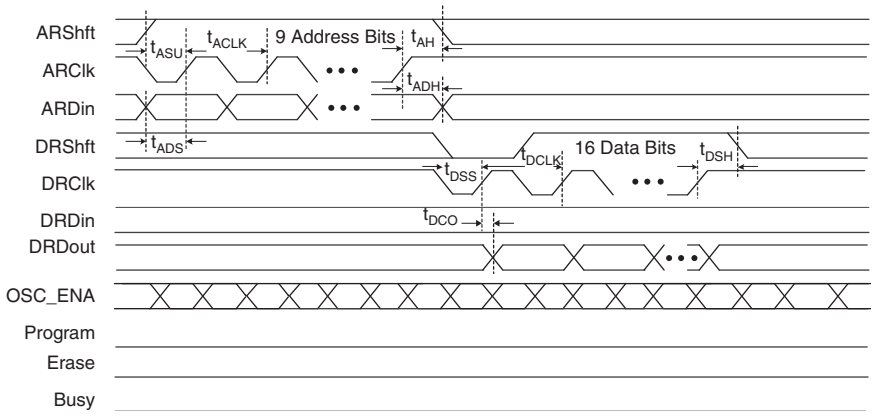

Figure 3–4. UFM Program Waveform

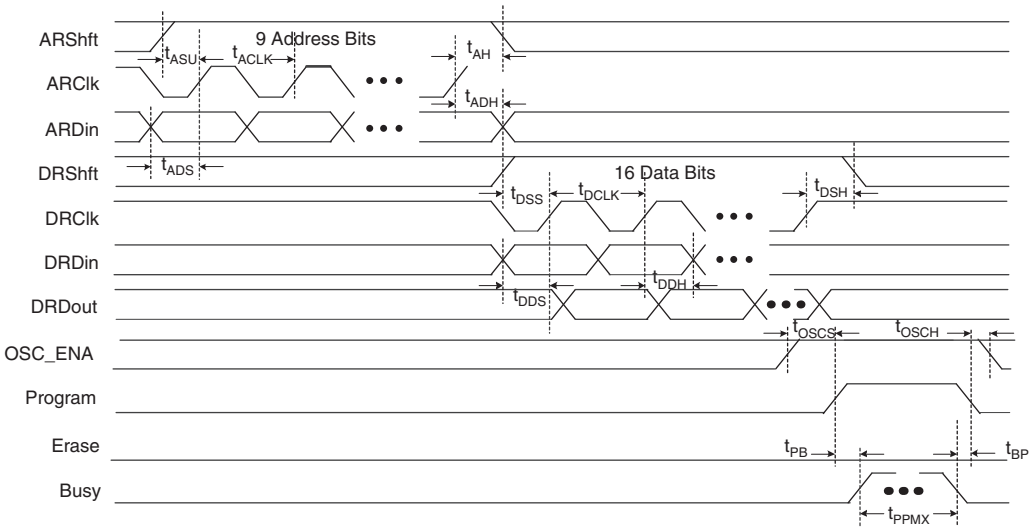

Figure 3–5. UFM Erase Waveform

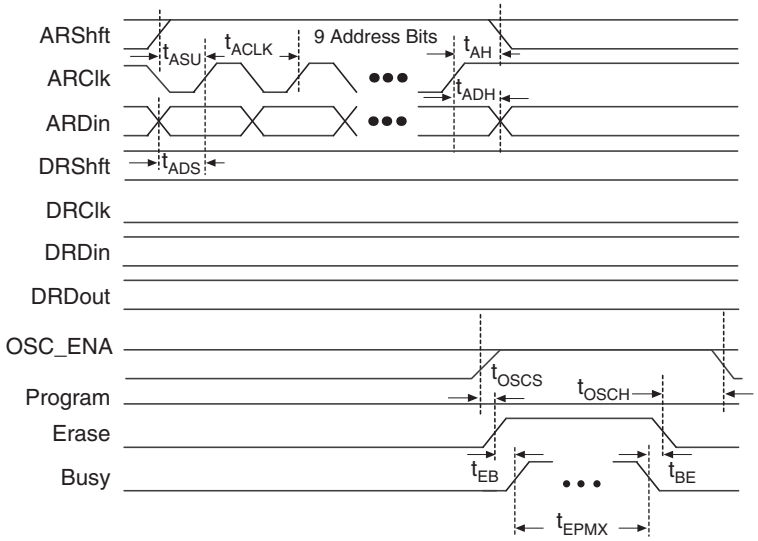

Table 3–25. Routing Delay Internal Timing Microparameters for MAX V Devices

Routing	5M40Z/ 5M80Z/ 5M160Z/ 5M240Z/ 5M570Z				5M1270Z/ 5M2210Z				Unit
	C4		C5, I5		C4		C5, I5		
	Min	Max	Min	Max	Min	Max	Min	Max	
t_{C4}	—	860	—	1,973	—	561	—	690	ps
t_{R4}	—	655	—	1,479	—	445	—	548	ps
t_{LOCAL}	—	1,143	—	2,947	—	731	—	899	ps

External Timing Parameters

External timing parameters are specified by device density and speed grade. All external I/O timing parameters shown are for the 3.3-V LVTTL I/O standard with the maximum drive strength and fast slew rate. For external I/O timing using standards other than LVTTL or for different drive strengths, use the I/O standard input and output delay adders in Table 3–32 on page 3–23 through Table 3–36 on page 3–25.

For more information about each external timing parameters symbol, refer to *AN629: Understanding Timing in Altera CPLDs*.

Table 3–26 lists the external I/O timing parameters for the 5M40Z, 5M80Z, 5M160Z, and 5M240Z devices.

Table 3–26. Global Clock External I/O Timing Parameters for the 5M40Z, 5M80Z, 5M160Z, and 5M240Z Devices *(Note 1)*, *(2)*

Symbol	Parameter	Condition	C4		C5, I5		Unit
			Min	Max	Min	Max	
t_{PD1}	Worst case pin-to-pin delay through one LUT	10 pF	—	7.9	—	14.0	ns
t_{PD2}	Best case pin-to-pin delay through one LUT	10 pF	—	5.8	—	8.5	ns
t_{SU}	Global clock setup time	—	2.4	—	4.6	—	ns
t_H	Global clock hold time	—	0	—	0	—	ns
t_{CO}	Global clock to output delay	10 pF	2.0	6.6	2.0	8.6	ns
t_{CH}	Global clock high time	—	253	—	339	—	ps
t_{CL}	Global clock low time	—	253	—	339	—	ps
t_{CNT}	Minimum global clock period for 16-bit counter	—	5.4	—	8.4	—	ns
f_{CNT}	Maximum global clock frequency for 16-bit counter	—	—	184.1	—	118.3	MHz

Notes to Table 3–26:

(1) The maximum frequency is limited by the I/O standard on the clock input pin. The 16-bit counter critical delay performs faster than this global clock input pin maximum frequency.

(2) Not applicable to the T144 package of the 5M240Z device.

Table 3–27 lists the external I/O timing parameters for the T144 package of the 5M240Z device.

Table 3–27. Global Clock External I/O Timing Parameters for the 5M240Z Device *(Note 1)*, *(2)*

Symbol	Parameter	Condition	C4		C5, I5		Unit
			Min	Max	Min	Max	
t_{PD1}	Worst case pin-to-pin delay through one LUT	10 pF	—	9.5	—	17.7	ns
t_{PD2}	Best case pin-to-pin delay through one LUT	10 pF	—	5.7	—	8.5	ns
t_{SU}	Global clock setup time	—	2.2	—	4.4	—	ns
t_H	Global clock hold time	—	0	—	0	—	ns
t_{CO}	Global clock to output delay	10 pF	2.0	6.7	2.0	8.7	ns
t_{CH}	Global clock high time	—	253	—	339	—	ps
t_{CL}	Global clock low time	—	253	—	339	—	ps
t_{CNT}	Minimum global clock period for 16-bit counter	—	5.4	—	8.4	—	ns
f_{CNT}	Maximum global clock frequency for 16-bit counter	—	—	184.1	—	118.3	MHz

Notes to Table 3–27:

(1) The maximum frequency is limited by the I/O standard on the clock input pin. The 16-bit counter critical delay performs faster than this global clock input pin maximum frequency.

(2) Only applicable to the T144 package of the 5M240Z device.

Table 3–28 lists the external I/O timing parameters for the 5M570Z device.

Table 3–28. Global Clock External I/O Timing Parameters for the 5M570Z Device *(Note 1)*

Symbol	Parameter	Condition	C4		C5, I5		Unit
			Min	Max	Min	Max	
t_{PD1}	Worst case pin-to-pin delay through one LUT	10 pF	—	9.5	—	17.7	ns
t_{PD2}	Best case pin-to-pin delay through one LUT	10 pF	—	5.7	—	8.5	ns
t_{SU}	Global clock setup time	—	2.2	—	4.4	—	ns
t_H	Global clock hold time	—	0	—	0	—	ns
t_{CO}	Global clock to output delay	10 pF	2.0	6.7	2.0	8.7	ns
t_{CH}	Global clock high time	—	253	—	339	—	ps
t_{CL}	Global clock low time	—	253	—	339	—	ps
t_{CNT}	Minimum global clock period for 16-bit counter	—	5.4	—	8.4	—	ns
f_{CNT}	Maximum global clock frequency for 16-bit counter	—	—	184.1	—	118.3	MHz

Note to Table 3–28:

(1) The maximum frequency is limited by the I/O standard on the clock input pin. The 16-bit counter critical delay performs faster than this global clock input pin maximum frequency.

Table 3–29 lists the external I/O timing parameters for the 5M1270Z device.

Table 3–29. Global Clock External I/O Timing Parameters for the 5M1270Z Device *(Note 1)*, *(2)*

Symbol	Parameter	Condition	C4		C5, I5		Unit
			Min	Max	Min	Max	
t_{PD1}	Worst case pin-to-pin delay through one LUT	10 pF	—	8.1	—	10.0	ns
t_{PD2}	Best case pin-to-pin delay through one LUT	10 pF	—	4.8	—	5.9	ns
t_{SU}	Global clock setup time	—	1.5	—	1.9	—	ns
t_H	Global clock hold time	—	0	—	0	—	ns
t_{CO}	Global clock to output delay	10 pF	2.0	5.9	2.0	7.3	ns
t_{CH}	Global clock high time	—	216	—	266	—	ps
t_{CL}	Global clock low time	—	216	—	266	—	ps
t_{CNT}	Minimum global clock period for 16-bit counter	—	4.0	—	5.0	—	ns
f_{CNT}	Maximum global clock frequency for 16-bit counter	—	—	247.5	—	201.1	MHz

Notes to Table 3–29:

(1) The maximum frequency is limited by the I/O standard on the clock input pin. The 16-bit counter critical delay performs faster than this global clock input pin maximum frequency.

(2) Not applicable to the F324 package of the 5M1270Z device.

Table 3–30 lists the external I/O timing parameters for the F324 package of the 5M1270Z device.

Table 3–30. Global Clock External I/O Timing Parameters for the 5M1270Z Device *(Note 1)*, *(2)*

Symbol	Parameter	Condition	C4		C5, I5		Unit
			Min	Max	Min	Max	
t_{PD1}	Worst case pin-to-pin delay through one LUT	10 pF	—	9.1	—	11.2	ns
t_{PD2}	Best case pin-to-pin delay through one LUT	10 pF	—	4.8	—	5.9	ns
t_{SU}	Global clock setup time	—	1.5	—	1.9	—	ns
t_{H}	Global clock hold time	—	0	—	0	—	ns
t_{CO}	Global clock to output delay	10 pF	2.0	6.0	2.0	7.4	ns
t_{CH}	Global clock high time	—	216	—	266	—	ps
t_{CL}	Global clock low time	—	216	—	266	—	ps
t_{CNT}	Minimum global clock period for 16-bit counter	—	4.0	—	5.0	—	ns
f_{CNT}	Maximum global clock frequency for 16-bit counter	—	—	247.5	—	201.1	MHz

Notes to Table 3–30:

(1) The maximum frequency is limited by the I/O standard on the clock input pin. The 16-bit counter critical delay performs faster than this global clock input pin maximum frequency.

(2) Only applicable to the F324 package of the 5M1270Z device.

Table 3–31 lists the external I/O timing parameters for the 5M2210Z device.

Table 3–31. Global Clock External I/O Timing Parameters for the 5M2210Z Device *(Note 1)*

Symbol	Parameter	Condition	C4		C5, I5		Unit
			Min	Max	Min	Max	
t_{PD1}	Worst case pin-to-pin delay through one LUT	10 pF	—	9.1	—	11.2	ns
t_{PD2}	Best case pin-to-pin delay through one LUT	10 pF	—	4.8	—	5.9	ns
t_{SU}	Global clock setup time	—	1.5	—	1.9	—	ns
t_{H}	Global clock hold time	—	0	—	0	—	ns
t_{CO}	Global clock to output delay	10 pF	2.0	6.0	2.0	7.4	ns
t_{CH}	Global clock high time	—	216	—	266	—	ps
t_{CL}	Global clock low time	—	216	—	266	—	ps
t_{CNT}	Minimum global clock period for 16-bit counter	—	4.0	—	5.0	—	ns
f_{CNT}	Maximum global clock frequency for 16-bit counter	—	—	247.5	—	201.1	MHz

Note to Table 3–31:

(1) The maximum frequency is limited by the I/O standard on the clock input pin. The 16-bit counter critical delay performs faster than this global clock input pin maximum frequency.

External Timing I/O Delay Adders

The I/O delay timing parameters for the I/O standard input and output adders and the input delays are specified by speed grade, independent of device density.

Table 3–32 through Table 3–36 on page 3–25 list the adder delays associated with I/O pins for all packages. If you select an I/O standard other than 3.3-V LVTTL, add the input delay adder to the external t_{SU} timing parameters listed in Table 3–26 on page 3–20 through Table 3–31. If you select an I/O standard other than 3.3-V LVTTL with 16 mA drive strength and fast slew rate, add the output delay adder to the external t_{CO} and t_{PD} listed in Table 3–26 on page 3–20 through Table 3–31.

Table 3–32. External Timing Input Delay Adders for MAX V Devices

I/O Standard		5M40Z/ 5M80Z/ 5M160Z/ 5M240Z/ 5M570Z				5M1270Z/ 5M2210Z				Unit
		C4		C5, I5		C4		C5, I5		
		Min	Max	Min	Max	Min	Max	Min	Max	
3.3-V LVTTL	Without Schmitt Trigger	—	0	—	0	—	0	—	0	ps
	With Schmitt Trigger	—	387	—	442	—	480	—	591	ps
3.3-V LVCMOS	Without Schmitt Trigger	—	0	—	0	—	0	—	0	ps
	With Schmitt Trigger	—	387	—	442	—	480	—	591	ps
2.5-V LVTTL / LVCMOS	Without Schmitt Trigger	—	42	—	42	—	246	—	303	ps
	With Schmitt Trigger	—	429	—	483	—	787	—	968	ps
1.8-V LVTTL / LVCMOS	Without Schmitt Trigger	—	378	—	368	—	695	—	855	ps
1.5-V LVCMOS	Without Schmitt Trigger	—	681	—	658	—	1,334	—	1,642	ps
1.2-V LVCMOS	Without Schmitt Trigger	—	1,055	—	1,010	—	2,324	—	2,860	ps
3.3-V PCI	Without Schmitt Trigger	—	0	—	0	—	0	—	0	ps

Table 3–33. External Timing Input Delay t_{GLOB} Adders for GCLK Pins for MAX V Devices (Part 1 of 2)

I/O Standard		5M40Z/ 5M80Z/ 5M160Z/ 5M240Z/ 5M570Z				5M1270Z/ 5M2210Z				Unit
		C4		C5, I5		C4		C5, I5		
		Min	Max	Min	Max	Min	Max	Min	Max	
3.3-V LVTTL	Without Schmitt Trigger	—	0	—	0	—	0	—	0	ps
	With Schmitt Trigger	—	387	—	442	—	400	—	493	ps

Table 3–33. External Timing Input Delay t_{GLOB} Adders for GCLK Pins for MAX V Devices (Part 2 of 2)

I/O Standard		5M40Z/ 5M80Z/ 5M160Z/ 5M240Z/ 5M570Z				5M1270Z/ 5M2210Z				Unit
		C4		C5, I5		C4		C5, I5		
		Min	Max	Min	Max	Min	Max	Min	Max	
3.3-V LVCMOS	Without Schmitt Trigger	—	0	—	0	—	0	—	0	ps
	With Schmitt Trigger	—	387	—	442	—	400	—	493	ps
2.5-V LVTTL / LVCMOS	Without Schmitt Trigger	—	242	—	242	—	287	—	353	ps
	With Schmitt Trigger	—	429	—	483	—	550	—	677	ps
1.8-V LVTTL / LVCMOS	Without Schmitt Trigger	—	378	—	368	—	459	—	565	ps
1.5-V LVCMOS	Without Schmitt Trigger	—	681	—	658	—	1,111	—	1,368	ps
1.2-V LVCMOS	Without Schmitt Trigger	—	1,055	—	1,010	—	2,067	—	2,544	ps
3.3-V PCI	Without Schmitt Trigger	—	0	—	0	—	7	—	9	ps

Table 3–34. External Timing Output Delay and t_{OD} Adders for Fast Slew Rate for MAX V Devices

I/O Standard		5M40Z/ 5M80Z/ 5M160Z/ 5M240Z/ 5M570Z				5M1270Z/ 5M2210Z				Unit
		C4		C5, I5		C4		C5, I5		
		Min	Max	Min	Max	Min	Max	Min	Max	
3.3-V LVTTL	16 mA	—	0	—	0	—	0	—	0	ps
	8 mA	—	39	—	58	—	84	—	104	ps
3.3-V LVCMOS	8 mA	—	0	—	0	—	0	—	0	ps
	4 mA	—	39	—	58	—	84	—	104	ps
2.5-V LVTTL / LVCMOS	14 mA	—	122	—	129	—	158	—	195	ps
	7 mA	—	196	—	188	—	251	—	309	ps
1.8-V LVTTL / LVCMOS	6 mA	—	624	—	624	—	738	—	909	ps
	3 mA	—	686	—	694	—	850	—	1,046	ps
1.5-V LVCMOS	4 mA	—	1,188	—	1,184	—	1,376	—	1,694	ps
	2 mA	—	1,279	—	1,280	—	1,517	—	1,867	ps
1.2-V LVCMOS	3 mA	—	1,911	—	1,883	—	2,206	—	2,715	ps
3.3-V PCI	20 mA	—	39	—	58	—	4	—	5	ps
LVDS	—	—	122	—	129	—	158	—	195	ps
RSDS	—	—	122	—	129	—	158	—	195	ps

Table 3–35. External Timing Output Delay and t_{OD} Adders for Slow Slew Rate for MAX V Devices

I/O Standard		5M40Z/ 5M80Z/ 5M160Z/ 5M240Z/ 5M570Z				5M1270Z/ 5M2210Z				Unit
		C4		C5, I5		C4		C5, I5		
		Min	Max	Min	Max	Min	Max	Min	Max	
3.3-V LVTTL	16 mA	—	5,913	—	6,043	—	6,612	—	6,293	ps
	8 mA	—	6,488	—	6,645	—	7,313	—	6,994	ps
3.3-V LVCMOS	8 mA	—	5,913	—	6,043	—	6,612	—	6,293	ps
	4 mA	—	6,488	—	6,645	—	7,313	—	6,994	ps
2.5-V LVTTL / LVCMOS	14 mA	—	9,088	—	9,222	—	10,021	—	9,702	ps
	7 mA	—	9,808	—	9,962	—	10,881	—	10,562	ps
1.8-V LVTTL / LVCMOS	6 mA	—	21,758	—	21,782	—	21,134	—	20,815	ps
	3 mA	—	23,028	—	23,032	—	22,399	—	22,080	ps
1.5-V LVCMOS	4 mA	—	39,068	—	39,032	—	34,499	—	34,180	ps
	2 mA	—	40,578	—	40,542	—	36,281	—	35,962	ps
1.2-V LVCMOS	3 mA	—	69,332	—	70,257	—	55,796	—	55,477	ps
3.3-V PCI	20 mA	—	6,488	—	6,645	—	339	—	418	ps

Table 3–36. IOE Programmable Delays for MAX V Devices

Parameter	5M40Z/ 5M80Z/ 5M160Z/ 5M240Z/ 5M570Z				5M1270Z/ 5M2210Z				Unit
	C4		C5, I5		C4		C5, I5		
	Min	Max	Min	Max	Min	Max	Min	Max	
Input Delay from Pin to Internal Cells = 1	—	1,858	—	2,214	—	1,592	—	1,960	ps
Input Delay from Pin to Internal Cells = 0	—	569	—	616	—	115	—	142	ps

Maximum Input and Output Clock Rates

Table 3–37 and Table 3–38 list the maximum input and output clock rates for standard I/O pins in MAX V devices.

Table 3–37. Maximum Input Clock Rate for I/Os for MAX V Devices

I/O Standard		5M40Z/ 5M80Z/ 5M160Z/ 5M240Z/ 5M570Z/5M1270Z/ 5M2210Z	Unit
		C4, C5, I5	
3.3-V LVTTL	Without Schmitt Trigger	304	MHz
	With Schmitt Trigger	304	MHz
3.3-V LVCMOS	Without Schmitt Trigger	304	MHz
	With Schmitt Trigger	304	MHz
2.5-V LVTTL	Without Schmitt Trigger	304	MHz
	With Schmitt Trigger	304	MHz
2.5-V LVCMOS	Without Schmitt Trigger	304	MHz
	With Schmitt Trigger	304	MHz
1.8-V LVTTL	Without Schmitt Trigger	200	MHz
1.8-V LVCMOS	Without Schmitt Trigger	200	MHz
1.5-V LVCMOS	Without Schmitt Trigger	150	MHz
1.2-V LVCMOS	Without Schmitt Trigger	120	MHz
3.3-V PCI	Without Schmitt Trigger	304	MHz

Table 3–38. Maximum Output Clock Rate for I/Os for MAX V Devices

I/O Standard	5M40Z/ 5M80Z/ 5M160Z/ 5M240Z/ 5M570Z/5M1270Z/ 5M2210Z	Unit
	C4, C5, I5	
3.3-V LVTTL	304	MHz
3.3-V LVCMOS	304	MHz
2.5-V LVTTL	304	MHz
2.5-V LVCMOS	304	MHz
1.8-V LVTTL	200	MHz
1.8-V LVCMOS	200	MHz
1.5-V LVCMOS	150	MHz
1.2-V LVCMOS	120	MHz
3.3-V PCI	304	MHz
LVDS	304	MHz
RSDS	200	MHz

LVDS and RSDS Output Timing Specifications

Table 3–39 lists the emulated LVDS output timing specifications for MAX V devices.

Table 3–39. Emulated LVDS Output Timing Specifications for MAX V Devices

Parameter	Mode	5M40Z/ 5M80Z/ 5M160Z/ 5M240Z/ 5M570Z/5M1270Z/ 5M2210Z		Unit
		C4, C5, I5		
		Min	Max	
Data rate *(1)*, *(2)*	×10	—	304	Mbps
	×9	—	304	Mbps
	×8	—	304	Mbps
	×7	—	304	Mbps
	×6	—	304	Mbps
	×5	—	304	Mbps
	×4	—	304	Mbps
	×3	—	304	Mbps
	×2	—	304	Mbps
	×1	—	304	Mbps
t_{DUTY}	—	45	55	%
Total jitter *(3)*	—	—	0.2	UI
t_{RISE}	—	—	450	ps
t_{FALL}	—	—	450	ps

Notes to Table 3–39:

(1) The performance of the LVDS_E_3R transmitter system is limited by the lower of the two—the maximum data rate supported by LVDS_E_3R I/O buffer or 2x (F_{MAX} of the ALTLVDS_TX instance). The actual performance of your LVDS_E_3R transmitter system must be attained through the Quartus II timing analysis of the complete design.

(2) For the input clock pin to achieve 304 Mbps, use I/O standard with V_{CCIO} of 2.5 V and above.

(3) This specification is based on external clean clock source.

Table 3–40 lists the emulated RSDS output timing specifications for MAX V devices.

Table 3–40. Emulated RSDS Output Timing Specifications for MAX V Devices

Parameter	Mode	5M40Z/ 5M80Z/ 5M160Z/ 5M240Z/ 5M570Z/5M1270Z/ 5M2210Z		Unit
		C4, C5, I5		
		Min	Max	
Data rate *(1)*	×10	—	200	Mbps
	×9	—	200	Mbps
	×8	—	200	Mbps
	×7	—	200	Mbps
	×6	—	200	Mbps
	×5	—	200	Mbps
	×4	—	200	Mbps
	×3	—	200	Mbps
	×2	—	200	Mbps
	×1	—	200	Mbps
t_{DUTY}	—	45	55	%
Total jitter *(2)*	—	—	0.2	UI
t_{RISE}	—	—	450	ps
t_{FALL}	—	—	450	ps

Notes to Table 3–40:

(1) For the input clock pin to achieve 200 Mbps, use I/O standard with V_{CCIO} of 1.8 V and above.

(2) This specification is based on external clean clock source.

JTAG Timing Specifications

Figure 3–6 shows the timing waveform for the JTAG signals for the MAX V device family.

Figure 3–6. JTAG Timing Waveform for MAX V Devices

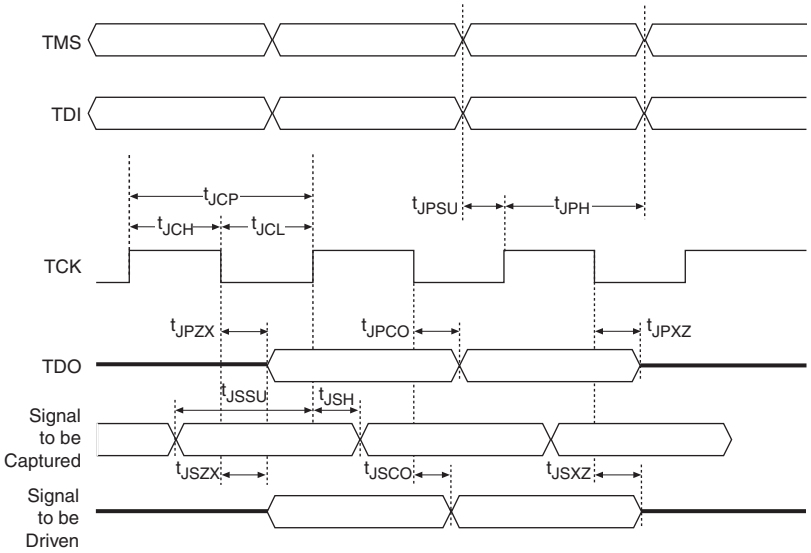

Table 3–41 lists the JTAG timing parameters and values for the MAX V device family.

Table 3–41. JTAG Timing Parameters for MAX V Devices (Part 1 of 2)

Symbol	Parameter	Min	Max	Unit
t_{JCP} *(1)*	TCK clock period for V_{CCIO1} = 3.3 V	55.5	—	ns
	TCK clock period for V_{CCIO1} = 2.5 V	62.5	—	ns
	TCK clock period for V_{CCIO1} = 1.8 V	100	—	ns
	TCK clock period for V_{CCIO1} = 1.5 V	143	—	ns
t_{JCH}	TCK clock high time	20	—	ns
t_{JCL}	TCK clock low time	20	—	ns
t_{JPSU}	JTAG port setup time *(2)*	8	—	ns
t_{JPH}	JTAG port hold time	10	—	ns
t_{JPCO}	JTAG port clock to output *(2)*	—	15	ns
t_{JPZX}	JTAG port high impedance to valid output *(2)*	—	15	ns
t_{JPXZ}	JTAG port valid output to high impedance *(2)*	—	15	ns
t_{JSSU}	Capture register setup time	8	—	ns
t_{JSH}	Capture register hold time	10	—	ns
t_{JSCO}	Update register clock to output	—	25	ns
t_{JSZX}	Update register high impedance to valid output	—	25	ns

Table 3–41. JTAG Timing Parameters for MAX V Devices (Part 2 of 2)

Symbol	Parameter	Min	Max	Unit
t_{JSXZ}	Update register valid output to high impedance	—	25	ns

Notes to Table 3–41:

(1) Minimum clock period specified for 10 pF load on the TDO pin. Larger loads on TDO degrades the maximum TCK frequency.

(2) This specification is shown for 3.3-V LVTTL/LVCMOS and 2.5-V LVTTL/LVCMOS operation of the JTAG pins. For 1.8-V LVTTL/LVCMOS and 1.5-V LVCMOS operation, the t_{JPSU} minimum is 6 ns and t_{JPCO}, t_{JPZX}, and t_{JPXZ} are maximum values at 35 ns.

Document Revision History

Table 3–42 lists the revision history for this chapter.

Table 3–42. Document Revision History

Date	Version	Changes
May 2011	1.2	Updated Table 3–2, Table 3–15, Table 3–16, and Table 3–33.
January 2011	1.1	Updated Table 3–37, Table 3–38, Table 3–39, and Table 3–40.
December 2010	1.0	Initial release.

Компания «ЭлектроПласт» предлагает заключение долгосрочных отношений при поставках импортных электронных компонентов на взаимовыгодных условиях!

Наши преимущества:

- Оперативные поставки широкого спектра электронных компонентов отечественного и импортного производства напрямую от производителей и с крупнейших мировых складов;
- Поставка более 17-ти миллионов наименований электронных компонентов;
- Поставка сложных, дефицитных, либо снятых с производства позиций;
- Оперативные сроки поставки под заказ (от 5 рабочих дней);
- Экспресс доставка в любую точку России;
- Техническая поддержка проекта, помощь в подборе аналогов, поставка прототипов;
- Система менеджмента качества сертифицирована по Международному стандарту ISO 9001;
- Лицензия ФСБ на осуществление работ с использованием сведений, составляющих государственную тайну;
- Поставка специализированных компонентов (Xilinx, Altera, Analog Devices, Intersil, Interpoint, Microsemi, Aeroflex, Peregrine, Syfer, Eurofarad, Texas Instrument, Miteq, Cobham, E2V, MA-COM, Hittite, Mini-Circuits,General Dynamics и др.);

Помимо этого, одним из направлений компании «ЭлектроПласт» является направление «Источники питания». Мы предлагаем Вам помощь Конструкторского отдела:

- Подбор оптимального решения, техническое обоснование при выборе компонента;
- Подбор аналогов;
- Консультации по применению компонента;
- Поставка образцов и прототипов;
- Техническая поддержка проекта;
- Защита от снятия компонента с производства.

Как с нами связаться

Телефон: 8 (812) 309 58 32 (многоканальный)
Факс: 8 (812) 320-02-42
Электронная почта: org@eplast1.ru
Адрес: 198099, г. Санкт-Петербург, ул. Калинина, дом 2, корпус 4, литера А.