Low Cost, Miniature Isolation Amplifiers

AD202/AD204

FEATURES
Small Size: 4 Channels/Inch
Low Power: 35 mW (AD204)
High Accuracy: ±0.025% Max Nonlinearity (K Grade)
High CMR: 130 dB (Gain = 100 V/V)
Wide Bandwidth: 5 kHz Full-Power (AD204)
High CMV Isolation: ±2000 V pk Continuous (K Grade) (Signal and Power)
Isolated Power Outputs
Uncommitted Input Amplifier

APPLICATIONS
Multichannel Data Acquisition
Current Shunt Measurements
Motor Controls
Process Signal Isolation
High Voltage Instrumentation Amplifier

GENERAL DESCRIPTION

The AD202 and AD204 are general purpose, two-port, transformer-coupled isolation amplifiers that may be used in a broad range of applications where input signals must be measured, processed, and/or transmitted without a galvanic connection. These industry standard isolation amplifiers offer a complete isolation function, with both signal and power isolation provided for in a single compact plastic SIP or DIP style package. The primary distinction between the AD202 and the AD204 is that the AD202 is powered directly from a 15 V dc supply while the AD204 is powered by an externally supplied clock, such as the recommended AD246 Clock Driver.

The AD202 and AD204 provide total galvanic isolation between the input and output stages of the isolation amplifier through the use of internal transformer-coupling. The functionally complete AD202 and AD204 eliminate the need for an external, user-supplied dc-to-dc converter. This permits the designer to minimize the necessary circuit overhead and consequently reduce the overall design and component costs.

The design of the AD202 and AD204 emphasizes maximum flexibility and ease of use, including the availability of an uncommitted op amp on the input stage. They feature a bipolar ±5 V output range, an adjustable gain range of from 1V/V to 100 V/V, ±0.025% max nonlinearity (K grade), 130 dB of CMR, and the AD204 consumes a low 35 mW of power.

The functional block diagrams can be seen in Figures 1a and 1b.

PRODUCT HIGHLIGHTS

The AD202 and AD204 are full-featured isolators offering numerous benefits to the user:

Small Size: The AD202 and AD204 are available in SIP and DIP form packages. The SIP package is just 0.25" wide, giving the user a channel density of four channels per inch. The isolation barrier is positioned to maximize input to output spacing. For applications requiring a low profile, the DIP package provides a height of just 0.350".

High Accuracy: With a maximum nonlinearity of ±0.025% for the AD202K/AD204K (±0.05% for the AD202J/AD204J) and low drift over temperature, the AD202 and AD204 provide high isolation without loss of signal integrity.

Low Power: Power consumption of 35 mW (AD204) and 75 mW (AD202) over the full signal range makes these isolators ideal for use in applications with large channel counts or tight power budgets.

Wide Bandwidth: The AD204's full-power bandwidth of 5 kHz makes it useful for wideband signals. It is also effective in applications like control loops, where limited bandwidth could result in instability.

Excellent Common-Mode Performance: The AD202K/AD204K provide ±2000 V pk continuous common-mode isolation, while the AD202J/AD204J provide ±1000 V pk continuous common-mode isolation. All models have a total common-mode input capacitance of less than 5 pF inclusive of power isolation. This results in CMR ranging from 130 dB at a gain of 100 dB to 104 dB (minimum at unity gain) and very low leakage current (2 μA maximum).

Flexible Input: An uncommitted op amp is provided at the input of all models. This provides buffering and gain as required, and facilitates many alternative input functions including filtering, summing, high voltage ranges, and current (transimpedance) input.

Isolated Power: The AD204 can supply isolated power of ±7.5 V at 2 mA. This is sufficient to operate a low-drift input preamp, provide excitation to a semiconductor strain gage, or power any of a wide range of user-supplied ancillary circuits. The AD202 can supply ±7.5 V at 0.4 mA, which is sufficient to operate adjustment networks or low power references and op amps, or to provide an open-input alarm.

REV. D

Information furnished by Analog Devices is believed to be accurate and reliable. However, no responsibility is assumed by Analog Devices for its use, nor for any infringements of patents or other rights of third parties that may result from its use. No license is granted by implication or otherwise under any patent or patent rights of Analog Devices.

One Technology Way, P.O. Box 9106, Norwood, MA 02062-9106, U.S.A.
Tel: 781/329-4700 **www.analog.com**
Fax: 781/326-8703
© Analog Devices, Inc., 2002

AD202/AD204–SPECIFICATIONS (Typical @ 25°C and V_S = 15 V unless otherwise noted.)

Model	AD204J	AD204K	AD202J	AD202K
GAIN				
Range	1 V/V–100 V/V	*	*	*
Error	±0.5% typ (±4% max)	*	*	*
vs. Temperature	±20 ppm/°C typ (±45 ppm/°C max)	*	*	*
vs. Time	±50 ppm/1000 Hours	*	*	*
vs. Supply Voltage	±0.01%/V	±0.01%/V	±0.01%/V	±0.01%/V
Nonlinearity (G = 1 V/V)[1]	±0.05% max	±0.025% max	±0.05% max	±0.025% max
Nonlinearity vs. Isolated Supply Load	±0.0015%/mA	*	*	*
INPUT VOLTAGE RATINGS				
Input Voltage Range	±5 V	*	*	*
Max lsolation Voltage (Input to Output)				
AC, 60 Hz, Continuous	750 V rms	1500 V rms	750 V rms	1500 V rms
Continuous (AC and DC)	±1000 V Peak	±2000 V Peak	±1000 V Peak	±2000 V Peak
Isolation-Mode Rejection Ratio (IMRR) @ 60 Hz				
$R_S \leq 100\ \Omega$ (HI and LO Inputs) G = 1 V/V	110 dB	110 dB	105 dB	105 dB
G = 100 V/V	130 dB	*	*	*
$R_S \leq 1\ k\Omega$ (Input HI, LO, or Both) G = 1 V/V	104 dB min	104 dB min	100 dB min	100 dB min
G = 100 V/V	110 dB min	*	*	*
Leakage Current Input to Output @ 240 V rms, 60 Hz	2 µA rms max	*	*	*
INPUT IMPEDANCE				
Differential (G = 1 V/V)	$10^{12}\ \Omega$	*	*	*
Common-Mode	2 GΩ‖4.5 pF	*	*	*
INPUT BIAS CURRENT				
Initial, @ 25°C	±30 pA	*	*	*
vs. Temperature (0°C to 70°C)	±10 nA	*	*	*
INPUT DIFFERENCE CURRENT				
Initial, @ 25°C	±5 pA	*	*	*
vs. Temperature (0°C to 70°C)	±2 nA	*	*	*
INPUT NOISE				
Voltage, 0.1 Hz to 100 Hz	4 µV p-p	*	*	*
f > 200 Hz	50 nV/√Hz	*	*	*
FREQUENCY RESPONSE				
Bandwidth ($V_O \leq 10$ V p-p, G = 1 V–50 V/V)	5 kHz	5 kHz	2 kHz	2 kHz
Settling Time, to ±10 mV (10 V Step)	1 ms	*	*	*
OFFSET VOLTAGE (RTI)				
Initial, @ 25°C Adjustable to Zero	(±15 ±15/G)mV max	(±5 ± 5/G) mV max	(±15 ±15/G) mV max	(±5 ±5/G) mV max
vs. Temperature (0°C to 70°C)	$\left(\pm 10 \pm \frac{10}{G}\right)$ µV/°C	*	*	*
RATED OUTPUT				
Voltage (Out HI to Out LO)	±5 V	*	*	*
Voltage at Out HI or Out LO (Ref. Pin 32)	±6.5 V	*	*	*
Output Resistance	3 kΩ	3 kΩ	7 kΩ	7 kΩ
Output Ripple, 100 kHz Bandwidth	10 mV p-p	*	*	*
5 kHz Bandwidth	0.5 mV rms	*	*	*
ISOLATED POWER OUTPUT[2]				
Voltage, No Load	±7.5 V	*	*	*
Accuracy	±10%	*	*	*
Current	2 mA (Either Output)[3]	2 mA (Either Output)[3]	400 µA Total	400 µA Total
Regulation, No Load to Full Load	5%	*	*	*
Ripple	100 mV p-p	*	*	*
OSCILLATOR DRIVE INPUT				
Input Voltage	15 V p-p Nominal	15 V p-p Nominal	N/A	N/A
Input Frequency	25 kHz Nominal	25 kHz Nominal	N/A	N/A
POWER SUPPLY (AD202 Only)				
Voltage, Rated Performance	N/A	N/A	15 V ± 5%	15 V ± 5%
Voltage, Operating	N/A	N/A	15 V ± 10%	15 V ± 10%
Current, No Load (V_S = 15 V)	N/A	N/A	5 mA	5 mA
TEMPERATURE RANGE				
Rated Performance	0°C to 70°C	*	*	*
Operating	–40°C to +85°C	*	*	*
Storage	–40°C to +85°C	*	*	*
PACKAGE DIMENSIONS[4]				
SIP Package (Y)	2.08" × 0.250" × 0.625"	*	*	*
DIP Package (N)	2.10" × 0.700" × 0.350"	*	*	*

NOTES
*Specifications same as AD204J.
[1]Nonlinearity is specified as a % deviation from a best straight line.
[2]1.0 µF min decoupling required (see text).
[3]3 mA with one supply loaded.
[4]Width is 0.25" typ, 0.26" max.

Specifications subject to change without notice.

AD246–SPECIFICATIONS
(Typical @ 25°C and V_S = 15 V unless otherwise noted.)

Model	AD246JY	AD246JN
OUTPUT[1]		
Frequency	25 kHz Nominal	*
Voltage	15 V p-p Nominal	*
Fan-Out	32 Max	*
POWER SUPPLY REQUIREMENTS		
Input Voltage	15 V ± 5%	*
Supply Current		
Unloaded	35 mA	*
Each AD204 Adds	2.2 mA	*
Each 1 mA Load on AD204 $+V_{ISO}$ or $-V_{ISO}$ Adds	0.7 mA	*

NOTES
*Specifications the same as the AD246JY.
[1]The high current drive output will not support a short to ground.
Specifications subject to change without notice.

AD246 Pin Designations

Pin (Y)	Pin (N)	Function
1	12	15 V POWER IN
2	1	CLOCK OUTPUT
12	14	COMMON
13	24	COMMON

PIN DESIGNATIONS

AD202/AD204 SIP Package

Pin	Function
1	+INPUT
2	INPUT/V_{ISO} COMMON
3	–INPUT
4	INPUT FEEDBACK
5	$-V_{ISO}$ OUTPUT
6	$+V_{ISO}$ OUTPUT
31	15 V POWER IN (AD202 ONLY)
32	CLOCK/POWER COMMON
33	CLOCK INPUT (AD204 ONLY)
37	OUTPUT LO
38	OUTPUT HI

AD202/AD204 DIP Package

Pin	Function
1	+INPUT
2	INPUT/V_{ISO} COMMON
3	–INPUT
18	OUTPUT LO
19	OUTPUT HI
20	15 V POWER IN (AD202 ONLY)
21	CLOCK INPUT (AD204 ONLY)
22	CLOCK/POWER COMMON
36	$+V_{ISO}$ OUTPUT
37	$-V_{ISO}$ OUTPUT
38	INPUT FEEDBACK

ORDERING GUIDE

Model	Package Option	Max Common-Mode Voltage (Peak)	Max Linearity
AD202JY	SIP	1000 V	±0.05%
AD202KY	SIP	2000 V	±0.025%
AD202JN	DIP	1000 V	±0.05%
AD202KN	DIP	2000 V	±0.025%
AD204JY	SIP	1000 V	±0.05%
AD204KY	SIP	2000 V	±0.025%
AD204JN	DIP	1000 V	±0.05%
AD204KN	DIP	2000 V	±0.025%

CAUTION

ESD (electrostatic discharge) sensitive device. Electrostatic charges as high as 4000 V readily accumulate on the human body and test equipment and can discharge without detection. Although the AD202/AD204 features proprietary ESD protection circuitry, permanent damage may occur on devices subjected to high energy electrostatic discharges. Therefore, proper ESD precautions are recommended to avoid performance degradation or loss of functionality.

DIFFERENCES BETWEEN THE AD202 AND AD204

The primary distinction between the AD202 and AD204 is in the method by which they are powered: the AD202 operates directly from 15 V dc while the AD204 is powered by a non-isolated externally-supplied clock (AD246) that can drive up to 32 AD204s. The main advantages of using the externally-clocked AD204 over the AD202 are reduced cost in multichannel applications, lower power consumption, and higher bandwidth. In addition, the AD204 can supply substantially more isolated power than the AD202.

Of course, in a great many situations, especially where only one or a few isolators are used, the convenience of standalone operation provided by the AD202 will be more significant than any of the AD204's advantages. There may also be cases where it is desirable to accommodate either device interchangeably, so the pinouts of the two products have been designed to make that easy to do.

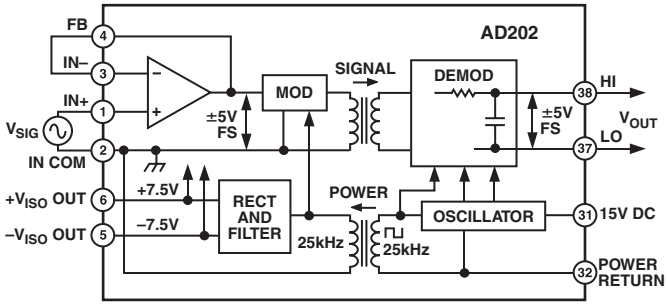

Figure 1a. AD202 Functional Block Diagram

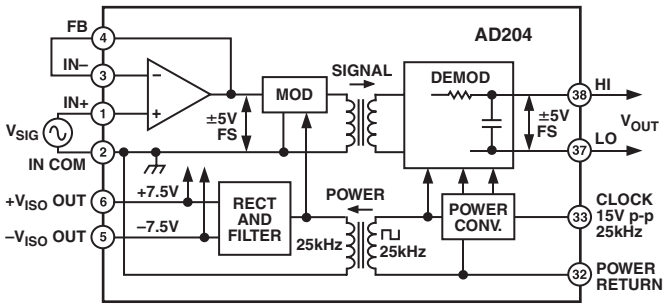

Figure 1b. AD204 Functional Block Diagram (Pin Designations Apply to the DIP-Style Package)

INSIDE THE AD202 AND AD204

The AD202 and AD204 use an amplitude modulation technique to permit transformer coupling of signals down to dc (Figure 1a and 1b). Both models also contain an uncommitted input op amp and a power transformer that provides isolated power to the op amp, the modulator, and any external load. The power transformer primary is driven by a 25 kHz, 15 V p-p square wave generated internally in the case of the AD202, or supplied externally for the AD204.

Within the signal swing limits of approximately ±5 V, the output voltage of the isolator is equal to the output voltage of the op amp; that is, the isolation barrier has unity gain. The output signal is not internally buffered, so the user is free to interchange the output leads to get signal inversion. Additionally, in multichannel applications, the unbuffered outputs can be multiplexed with one buffer following the mux. This technique minimizes offset errors while reducing power consumption and cost. The output resistance of the isolator is typically 3 kΩ for the AD204 (7 kΩ for AD202) and varies with signal level and temperature, so it should not be loaded (see Figure 2 for the effects of load upon nonlinearity and gain drift). In many cases, a high impedance load will be present or a following circuit such as an output filter can serve as a buffer so that a separate buffer function will not often be needed.

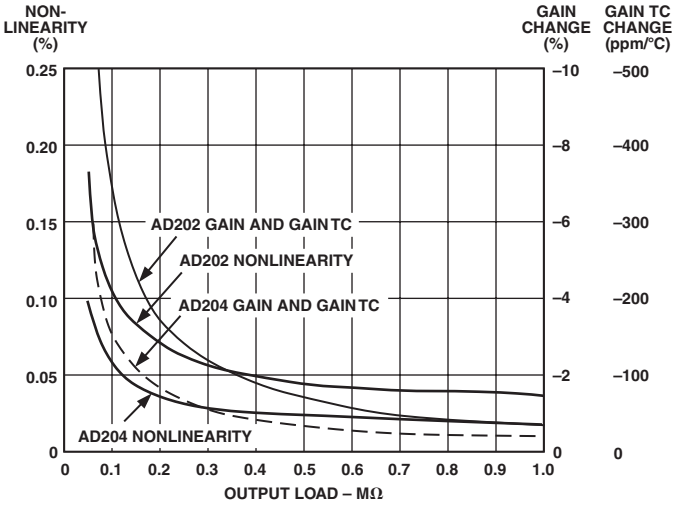

Figure 2. Effects of Output Loading

USING THE AD202 AND AD204

Powering the AD202. The AD202 requires only a single 15 V power supply connected as shown in Figure 3a. A bypass capacitor is provided in the module.

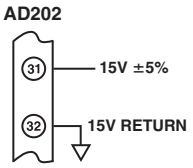

Figure 3a.

Powering the AD204. The AD204 gets its power from an externally supplied clock signal (a 15 V p-p square wave with a nominal frequency of 25 kHz) as shown in Figure 3b.

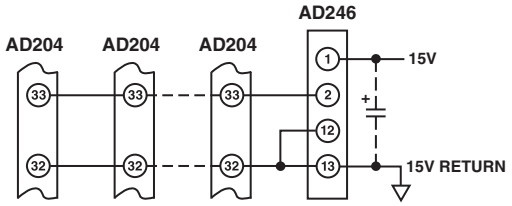

Figure 3b.

(NOTE: Circuit figures shown on this page are for SIP-style packages. Refer to Page 3 for proper DIP package pinout.)

AD246 Clock Driver. The AD246 is a compact, inexpensive clock driver that can be used to obtain the required clock from a single 15 V supply. Alternatively, the circuit shown in Figure 4 (essentially an AD246) can be used. In either case, one clock circuit can operate at least 32 AD204s at the rated minimum supply voltage of 14.25 V and one additional isolator can be operated for each 40 mV increase in supply voltage up to 15 V.

A supply bypass capacitor is included in the AD246, but if many AD204s are operated from a single AD246, an external bypass capacitor should be used with a value of at least 1 µF for every five isolators used. Place the capacitor as close as possible to the clock driver.

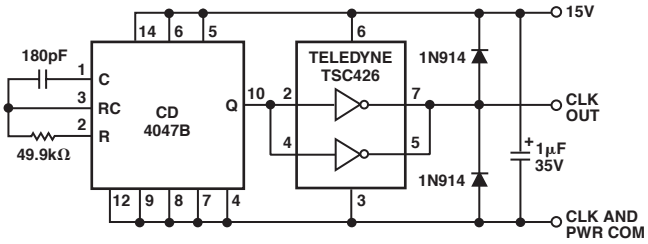

Figure 4. Clock Driver

Input Configurations. The AD202 and AD204 have been designed to be very easy to use in a wide range of applications. The basic connection for standard unity gain applications, useful for signals up to ±5 V, is shown in Figure 5; some of the possible variations are described below. When smaller signals must be handled, Figure 6 shows how to achieve gain while preserving a very high input resistance. The value of feedback resistor R_F should be kept above 20 kΩ for best results. Whenever a gain of more than five is taken, a 100 pF capacitor from FB to IN COM is required. At lower gains this capacitor is unnecessary, but it will not adversely affect performance if used.

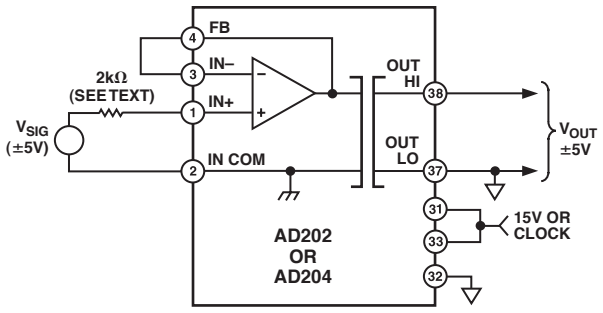

Figure 5. Basic Unity-Gain Application

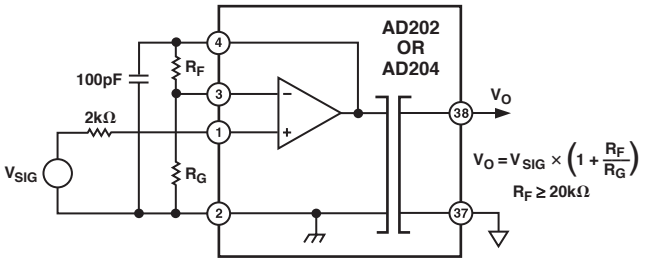

Figure 6. Input Connections for Gain > 1

The noninverting circuit of Figures 5 and 6 can also be used to your advantage when a signal inversion is needed: just interchange either the input leads or the output leads to get inversion. This approach retains the high input resistance of the noninverting circuit, and at unity gain no gain-setting resistors are needed.

When the isolator is not powered, a negative input voltage of more than about 2 V will cause an input current to flow. If the signal source can supply more than a few mA under such conditions, the 2 kΩ resistor shown in series with IN+ should be used to limit current to a safe value. This is particularly important with the AD202, which may not start if a large input current is present.

Figure 7 shows how to accommodate current inputs or sum currents or voltages. This circuit can also be used when the input signal is larger than the ±5 V input range of the isolator; for example, a ±50 V input span can be accommodated with R_F = 20 kΩ and R_S = 200 kΩ. Once again, a capacitor from FB to IN COM is required for gains above five.

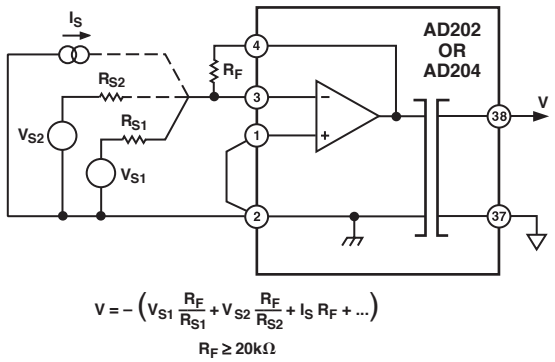

Figure 7. Connections for Summing or Current Inputs

(NOTE: Circuit figures shown on this page are for SIP-style packages. Refer to Page 3 for proper DIP package pinout.)

Adjustments. When gain and zero adjustments are needed, the circuit details will depend on whether adjustments are to be made at the isolator input or output, and (for input adjustments) on the input circuit used. Adjustments are usually best done on the input side, because it is better to null the zero ahead of the gain, and because gain adjustment is most easily done as part of the gain-setting network. Input adjustments are also to be preferred when the pots will be near the input end of the isolator (to minimize common-mode strays). Adjustments on the output side might be used if pots on the input side would represent a hazard due to the presence of large common-mode voltages during adjustment.

Figure 8a shows the input-side adjustment connections for use with the noninverting connection of the input amplifier. The zero adjustment circuit injects a small adjustment voltage in series with the low side of the signal source. (This will not work if the source has another current path to input common or if current flows in the signal source LO lead). Since the adjustment voltage is injected ahead of the gain, the values shown will work for any gain. Keep the resistance in series with input LO below a few hundred ohms to avoid CMR degradation.

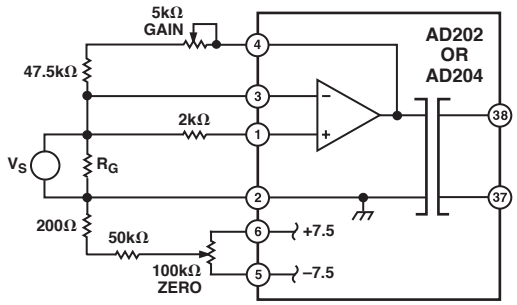

Figure 8a. Adjustments for Noninverting Connection of Op Amp

Also shown in Figure 8a is the preferred means of adjusting the gain-setting network. The circuit shown gives a nominal R_F of 50 kΩ, and will work properly for gains of ten or greater. The adjustment becomes less effective at lower gains (its effect is halved at G = 2) so that the pot will have to be a larger fraction of the total R_F at low gain. At G = 1 (follower) the gain cannot be adjusted downward without compromising input resistance; it is better to adjust gain at the signal source or after the output.

Figure 8b shows adjustments for use with inverting input circuits. The zero adjustment nulls the voltage at the summing node. This method is preferable to current injection because it is less affected by subsequent gain adjustment. Gain adjustment is again done in the feedback; but in this case it will work all the way down to unity gain (and below) without alteration.

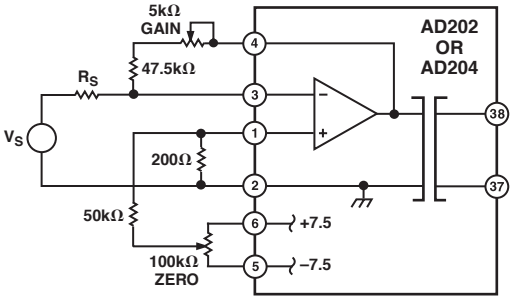

Figure 8b. Adjustments for Summing or Current Input

Figure 9 shows how zero adjustment is done at the output by taking advantage of the semi-floating output port. The range of this adjustment will have to be increased at higher gains; if that is done, be sure to use a suitably stable supply voltage for the pot circuit.

There is no easy way to adjust gain at the output side of the isolator itself. If gain adjustment must be done on the output side, it will have to be in a following circuit such as an output buffer or filter.

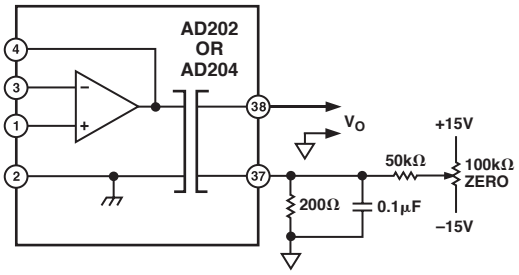

Figure 9. Output-Side Zero Adjustment

Common-Mode Performance. Figures 10a and 10b show how the common-mode rejection of the AD202 and AD204 varies with frequency, gain, and source resistance. For these isolators, the significant resistance will normally be that in the path from the source of the common-mode signal to IN COM. The AD202 and AD204 also perform well in applications requiring rejection of fast common-mode steps, as described in the Applications section.

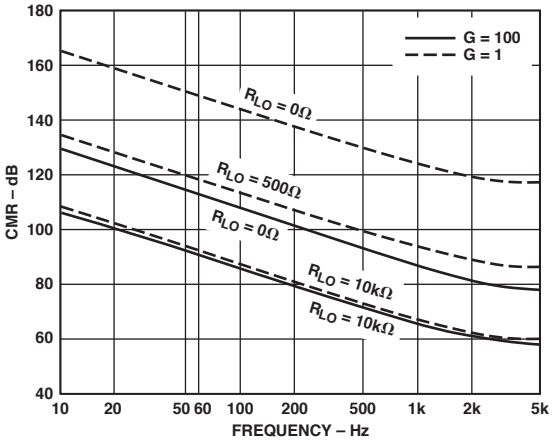

Figure 10a. AD204

(NOTE: Circuit figures shown on this page are for SIP-style packages. Refer to Page 3 for proper DIP package pinout.)

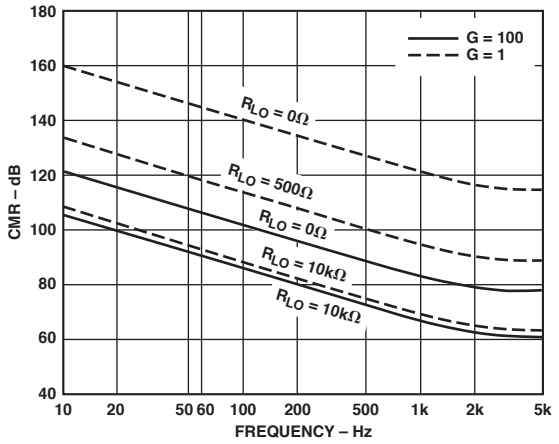

Figure 10b. AD202

Dynamics and Noise. Frequency response plots for the AD202 and AD204 are given in Figure 11. Since neither isolator is slew-rate limited, the plots apply for both large and small signals. Capacitive loads of up to 470 pF will not materially affect frequency response. When large signals beyond a few hundred Hz will be present, it is advisable to bypass $-V_{ISO}$ and $+V_{ISO}$ to IN COM with 1 µF tantalum capacitors even if the isolated supplies are not loaded.

At 50 Hz/60 Hz, phase shift through the AD202/AD204 is typically 0.8° (lagging). Typical unit to unit variation is ±0.2° (lagging).

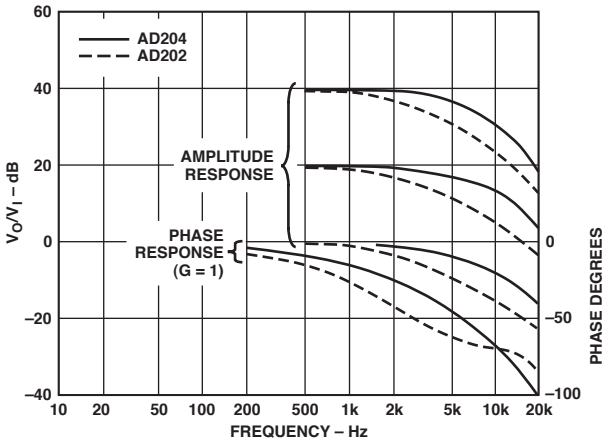

Figure 11. Frequency Response at Several Gains

The step response of the AD204 for very fast input signals can be improved by the use of an input filter, as shown in Figure 12. The filter limits the bandwidth of the input (to about 5.3 kHz) so that the isolator does not see fast, out-of-band input terms that can cause small amounts (±0.3%) of internal ringing. The AD204 will then settle to ±0.1% in about 300 µs for a 10 V step.

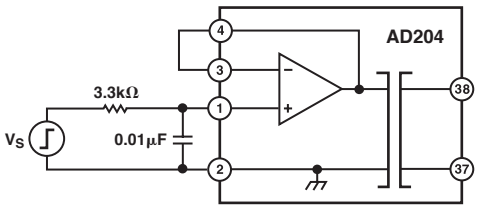

Figure 12. Input Filter for Improved Step Response

Except at the highest useful gains, the noise seen at the output of the AD202 and AD204 will be almost entirely comprised of carrier ripple at multiples of 25 kHz. The ripple is typically 2 mV p-p near zero output and increases to about 7 mV p-p for outputs of ±5 V (1 MHz measurement bandwidth). Adding a capacitor across the output will reduce ripple at the expense of bandwidth: for example, 0.05 µF at the output of the AD204 will result in 1.5 mV ripple at ±5 V, but signal bandwidth will be down to 1 kHz.

When the full isolator bandwidth is needed, the simple two-pole active filter shown in Figure 13 can be used. It will reduce ripple to 0.1 mV p-p with no loss of signal bandwidth, and also serves as an output buffer.

An output buffer or filter may sometimes show output spikes that do not appear at its input. This is usually due to clock noise appearing at the op amp's supply pins (since most op amps have little or no supply rejection at high frequencies). Another common source of carrier-related noise is the sharing of a ground track by both the output circuit and the power input. Figure 13 shows how to avoid these problems: the clock/supply port of the isolator does not share ground or 15 V tracks with any signal circuits, and the op amp's supply pins are bypassed to signal common (note that the grounded filter capacitor goes here as well). Ideally, the output signal LO lead and the supply common meet where the isolator output is actually measured, e.g., at an A/D converter input. If that point is more than a few feet from the isolator, it may be useful to bypass output LO to supply common at the isolator with a 0.1 µF capacitor.

In applications where more than a few AD204s are driven by a single clock driver, substantial current spikes will flow in the power return line and in whichever signal out lead returns to a low impedance point (usually output LO). Both of these tracks should be made large to minimize inductance and resistance; ideally, output LO should be directly connected to a ground plane which serves as measurement common.

Current spikes can be greatly reduced by connecting a small inductance (68 µH–100 µH) in series with the clock pin of each AD204. Molded chokes such as the Dale IM-2 series, with dc resistance of about 5 Ω, are suitable.

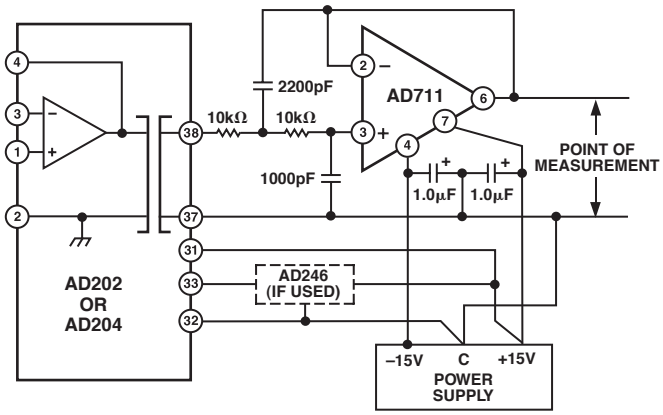

Figure 13. Output Filter Circuit Showing Proper Grounding

(NOTE: Circuit figures shown on this page are for SIP-style packages. Refer to Page 3 for proper DIP package pinout.)

Using Isolated Power. Both the AD202 and the AD204 provide ±7.5 V power outputs referenced to input common. These may be used to power various accessory circuits that must operate at the input common-mode level; the input zero adjustment pots described above are an example, and several other possible uses are shown in the section titled Application Examples.

The isolated power output of the AD202 (400 µA total from either or both outputs) is much more limited in current capacity than that of the AD204, but it is sufficient for operating micropower op amps, low power references (such as the AD589), adjustment circuits, and the like.

The AD204 gets its power from an external clock driver, and can handle loads on its isolated supply outputs of 2 mA for each supply terminal (+7.5 V and –7.5 V) or 3 mA for a single loaded output. Whenever the external load on either supply is more than about 200 µA, a 1 µF tantalum capacitor should be used to bypass each loaded supply pin to input common.

Up to 32 AD204s can be driven from a single AD246 (or equivalent) clock driver when the isolated power outputs of the AD204s are loaded with less than 200 µA each, at a worst-case supply voltage of 14.25 V at the clock driver. The number of AD204s that can be driven by one clock driver is reduced by one AD204 per 3.5 mA of isolated power load current at 7.5 V, distributed in any way over the AD204s being supplied by that clock driver. Thus a load of 1.75 mA from $+V_{ISO}$ to $-V_{ISO}$ would also count as one isolator because it spans 15 V.

It is possible to increase clock fanout by increasing supply voltage above the 14.25 V minimum required for 32 loads. One additional isolator (or 3.5 mA unit load) can be driven for each 40 mV of increase in supply voltage up to 15 V. Therefore if the minimum supply voltage can be held to 15 V – 1%, it is possible to operate 32 AD204s and 52 mA of 7.5 V loads. Figure 14 shows the allowable combinations of load current and channel count for various supply voltages.

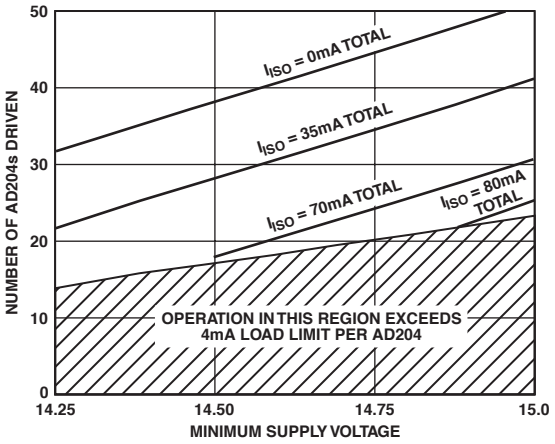

Figure 14. AD246 Fanout Rules

Operation at Reduced Signal Swing. Although the nominal output signal swing for the AD202 and AD204 is ±5 V, there may be cases where a smaller signal range is desirable. When that is done, the fixed errors (principally offset terms and output noise) become a larger fraction of the signal, but nonlinearity is reduced. This is shown in Figure 15.

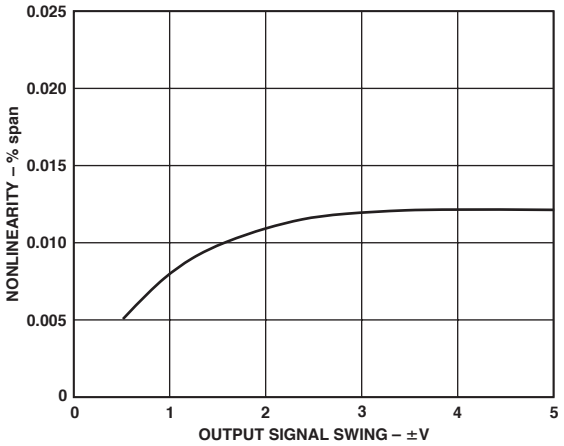

Figure 15. Nonlinearity vs. Signal Swing

PCB Layout for Multichannel Applications. The pinout of the AD204Y has been designed to make very dense packing possible in multichannel applications. Figure 16a shows the recommended printed circuit board (PCB) layout for the simple voltage-follower connection. When gain-setting resistors are present, 0.25" channel centers can still be achieved, as shown in Figure 16b.

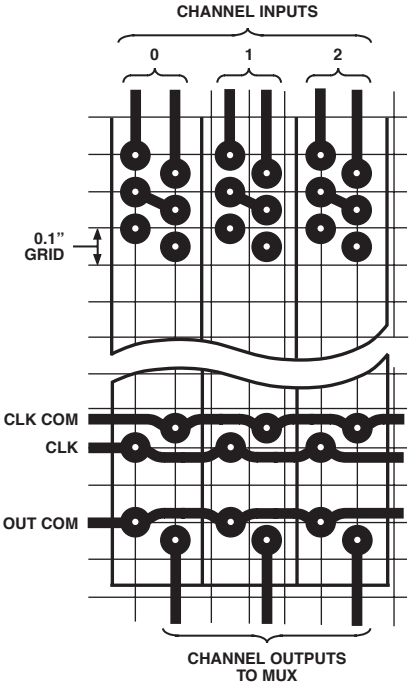

Figure 16a.

(NOTE: Circuit figures shown on this page are for SIP-style packages. Refer to Page 3 for proper DIP package pinout.)

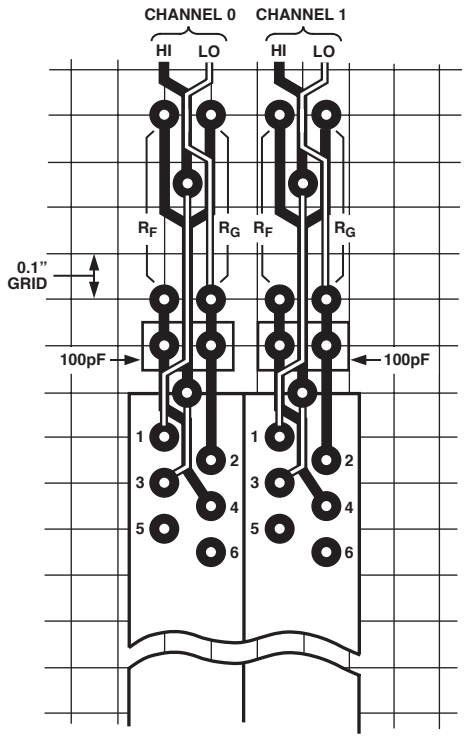

Figure 16b.

Synchronization. Since AD204s operate from a common clock, synchronization is inherent. AD202s will normally not interact to produce beat frequencies even when mounted on 0.25-inch centers. Interaction may occur in rare situations where a large number of long, unshielded input cables are bundled together and channel gains are high. In such cases, shielded cable may be required or AD204s can be used.

APPLICATIONS EXAMPLES

Low Level Sensor Inputs. In applications where the output of low level sensors such as thermocouples must be isolated, a low drift input amplifier can be used with an AD204, as shown in Figure 17. A three-pole active filter is included in the design to get normal-mode rejection of frequencies above a few Hz and to provide enhanced common-mode rejection at 60 Hz. If offset adjustment is needed, it is best done at the trim pins of the OP07 itself; gain adjustment can be done at the feedback resistor.

Note that the isolated supply current is large enough to mandate the use of 1 µF supply bypass capacitors. This circuit can be used with an AD202 if a low power op amp is used instead of the OP07.

Process Current Input with Offset. Figure 18 shows an isolator receiver that translates a 4-20 mA process current signal into a 0 V to 10 V output. A 1 V to 5 V signal appears at the isolator's output, and a –1 V reference applied to output LO provides the necessary level shift (in multichannel applications, the reference can be shared by all channels). This technique is often useful for getting offset with a follower-type output buffer.

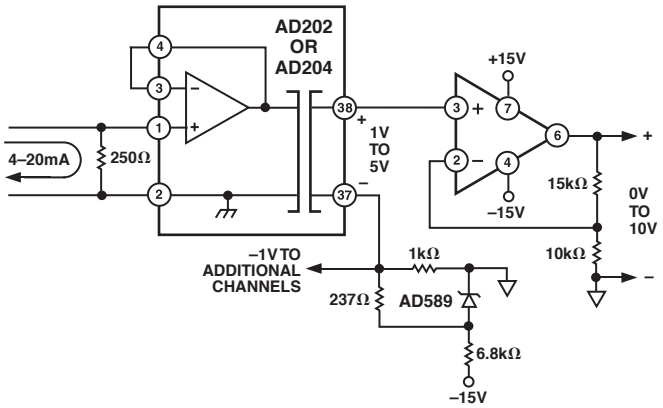

Figure 18. Process Current Input Isolator with Offset

The circuit as shown requires a source compliance of at least 5 V, but if necessary that can be reduced by using a lower value of current-sampling resistor and configuring the input amplifier for a small gain.

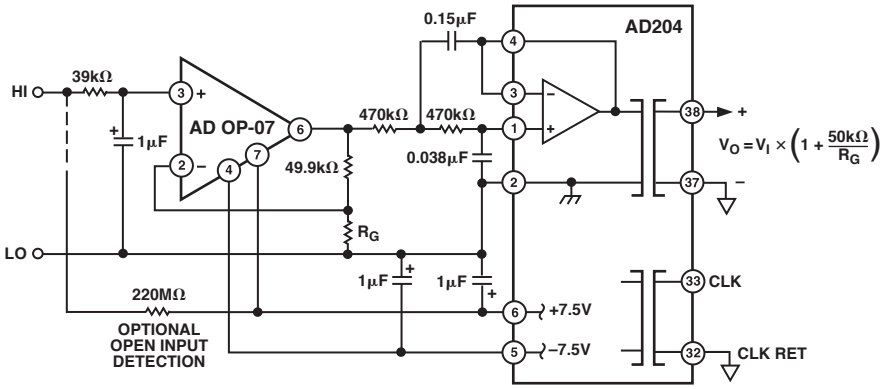

Figure 17. Input Amplifier and Filter for Sensor Signals

(NOTE: Circuit figures shown on this page are for SIP-style packages. Refer to Page 3 for proper DIP package pinout.)

High Compliance Current Source. In Figure 19, an isolator is used to sense the voltage across current-sensing resistor R_S to allow direct feedback control of a high voltage transistor or FET used as a high compliance current source. Since the isolator has virtually no response to dc common-mode voltage, the closed-loop current source has a static output resistance greater than 10^{14} Ω even for output currents of several mA. The output current capability of the circuit is limited only by power dissipation in the source transistor.

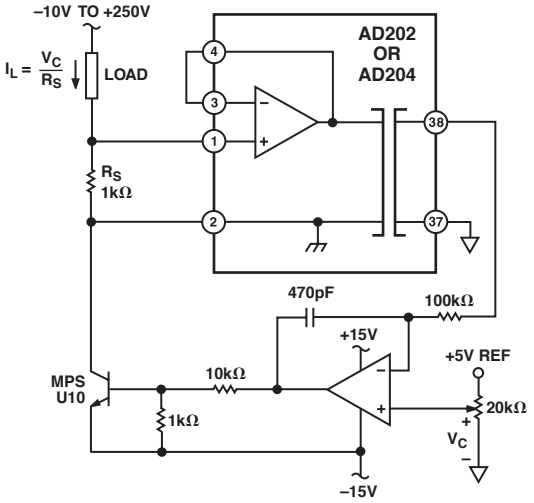

Figure 19. High Compliance Current Source

Motor Control Isolator. The AD202 and AD204 perform very well in applications where rejection of fast common-mode steps is important but bandwidth must not be compromised. Current sensing in a fill-wave bridge motor driver (Figure 20) is one example of this class of application. For 200 V common-mode steps (1 µs rise time) and a gain of 50 as shown, the typical response at the isolator output will be spikes of ±5 mV amplitude, decaying to zero in less than 100 µs. Spike height can be reduced by a factor of four with output filtering just beyond the isolator's bandwidth.

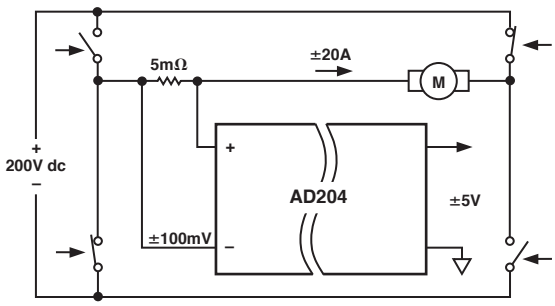

Figure 20. Motor Control Current Sensing

Floating Current Source/Ohmmeter. When a small floating current is needed with a compliance range of up to ±1000 V dc, the AD204 can be used to both create and regulate the current. This can save considerable power, since the controlled current does not have to return to ground. In Figure 21, an AD589 reference is used to force a small fixed voltage across R. That sets the current that the input op amp will have to return through the load to zero its input. Note that the isolator's output isn't needed at all in this application; the whole job is done by the input section. However, the signal at the output could be useful as it's the voltage across the load, referenced to ground. Since the load current is known, the output voltage is proportional to load resistance.

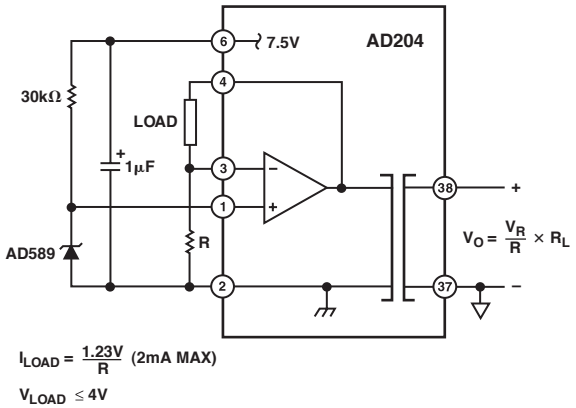

Figure 21. Floating Current Source

Photodiode Amplifier. Figure 22 shows a transresistance connection used to isolate and amplify the output of a photodiode. The photodiode operates at zero bias, and its output current is scaled by R_F to give a 5 V full-scale output.

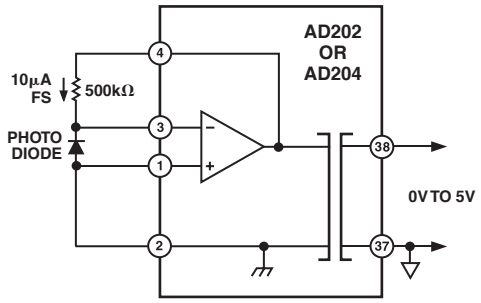

Figure 22. Photodiode Amplifier

(NOTE: Circuit figures shown on this page are for SIP-style packages. Refer to Page 3 for proper DIP package pinout.)

OUTLINE DIMENSIONS

Dimensions shown in inches and (millimeters)

AD202/AD204 SIP Package

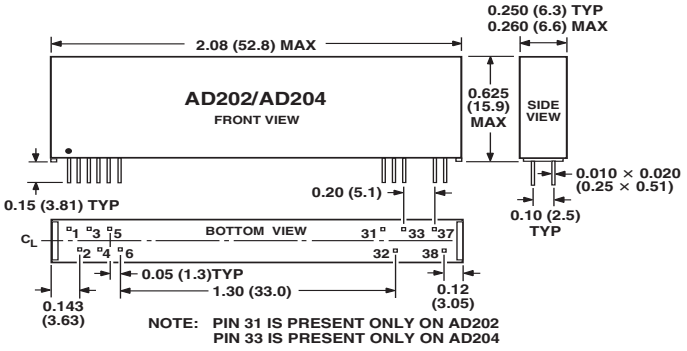

CONTROLLING DIMENSIONS ARE IN INCHES; MILLIMETER DIMENSIONS (IN PARENTHESES) ARE ROUNDED-OFF MILLIMETER EQUIVALENTS FOR REFERENCE ONLY AND ARE NOT APPROPRIATE FOR USE IN DESIGN

AD202/AD204 DIP Package

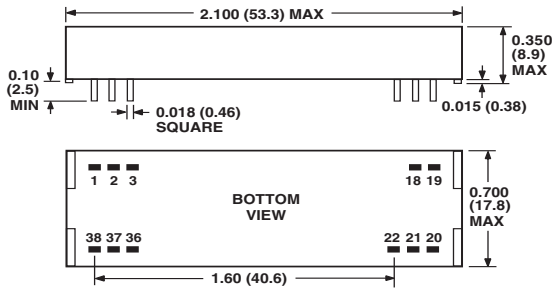

CONTROLLING DIMENSIONS ARE IN INCHES; MILLIMETER DIMENSIONS (IN PARENTHESES) ARE ROUNDED-OFF MILLIMETER EQUIVALENTS FOR REFERENCE ONLY AND ARE NOT APPROPRIATE FOR USE IN DESIGN

AC1058 Mating Socket

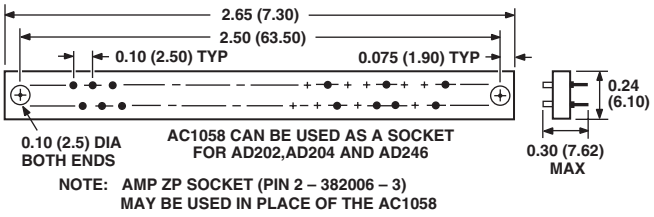

CONTROLLING DIMENSIONS ARE IN INCHES; MILLIMETER DIMENSIONS (IN PARENTHESES) ARE ROUNDED-OFF MILLIMETER EQUIVALENTS FOR REFERENCE ONLY AND ARE NOT APPROPRIATE FOR USE IN DESIGN

AC1060 Mating Socket

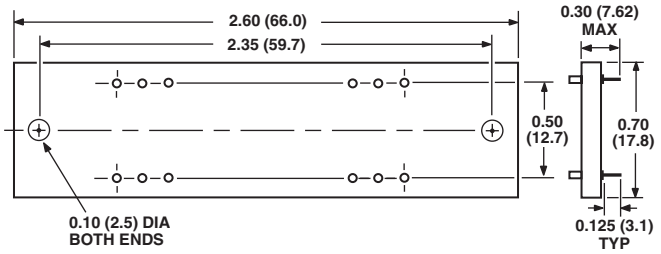

CONTROLLING DIMENSIONS ARE IN INCHES; MILLIMETER DIMENSIONS (IN PARENTHESES) ARE ROUNDED-OFF MILLIMETER EQUIVALENTS FOR REFERENCE ONLY AND ARE NOT APPROPRIATE FOR USE IN DESIGN

AD246JY Package

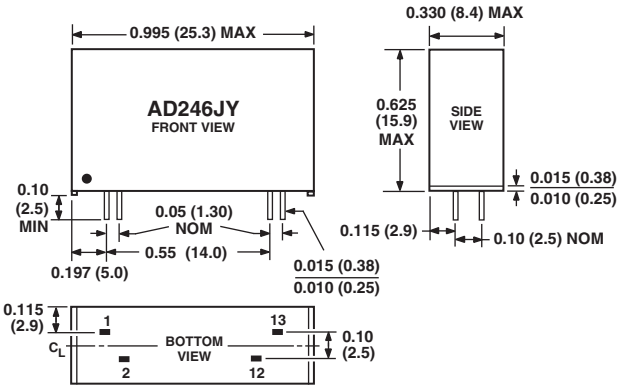

CONTROLLING DIMENSIONS ARE IN INCHES; MILLIMETER DIMENSIONS (IN PARENTHESES) ARE ROUNDED-OFF MILLIMETER EQUIVALENTS FOR REFERENCE ONLY AND ARE NOT APPROPRIATE FOR USE IN DESIGN

AD246JN Package

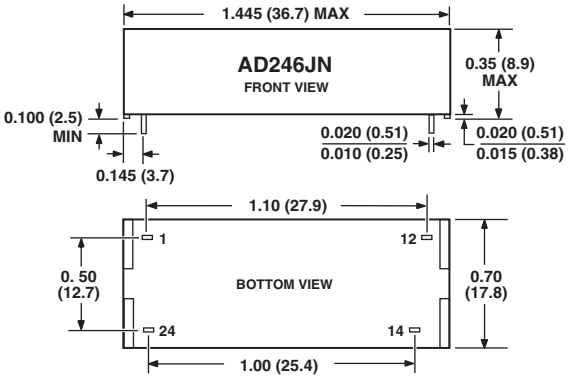

CONTROLLING DIMENSIONS ARE IN INCHES; MILLIMETER DIMENSIONS (IN PARENTHESES) ARE ROUNDED-OFF MILLIMETER EQUIVALENTS FOR REFERENCE ONLY AND ARE NOT APPROPRIATE FOR USE IN DESIGN

Revision History

Location	Page
10/02—Data Sheet changed from REV. C to REV. D.	
Deleted FUNCTIONAL BLOCK DIAGRAM	1
Text added to GENERAL DESCRIPTION	1
Edits to SPECIFICATIONS TABLE	2
Edits to Figure 4	5
Edits to Input Configurations section	5
Edit to High Compliance Current Source section	10
Updated OUTLINE DIMENSIONS	11
4/01—Data Sheet changed from REV. B to REV. C.	
Change to SIP Package	11

C00483–0–10/02(D)

PRINTED IN U.S.A.

Компания «ЭлектроПласт» предлагает заключение долгосрочных отношений при поставках импортных электронных компонентов на взаимовыгодных условиях!

Наши преимущества:

- Оперативные поставки широкого спектра электронных компонентов отечественного и импортного производства напрямую от производителей и с крупнейших мировых складов;
- Поставка более 17-ти миллионов наименований электронных компонентов;
- Поставка сложных, дефицитных, либо снятых с производства позиций;
- Оперативные сроки поставки под заказ (от 5 рабочих дней);
- Экспресс доставка в любую точку России;
- Техническая поддержка проекта, помощь в подборе аналогов, поставка прототипов;
- Система менеджмента качества сертифицирована по Международному стандарту ISO 9001;
- Лицензия ФСБ на осуществление работ с использованием сведений, составляющих государственную тайну;
- Поставка специализированных компонентов (Xilinx, Altera, Analog Devices, Intersil, Interpoint, Microsemi, Aeroflex, Peregrine, Syfer, Eurofarad, Texas Instrument, Miteq, Cobham, E2V, MA-COM, Hittite, Mini-Circuits,General Dynamics и др.);

Помимо этого, одним из направлений компании «ЭлектроПласт» является направление «Источники питания». Мы предлагаем Вам помощь Конструкторского отдела:

- Подбор оптимального решения, техническое обоснование при выборе компонента;
- Подбор аналогов;
- Консультации по применению компонента;
- Поставка образцов и прототипов;
- Техническая поддержка проекта;
- Защита от снятия компонента с производства.

Как с нами связаться

Телефон: 8 (812) 309 58 32 (многоканальный)
Факс: 8 (812) 320-02-42
Электронная почта: org@eplast1.ru
Адрес: 198099, г. Санкт-Петербург, ул. Калинина, дом 2, корпус 4, литера А.