Features

- High Performance, Low Power 32-bit Atmel® AVR® Microcontroller
  - Compact Single-Cycle RISC Instruction Set Including DSP Instruction Set
  - Read-Modify-Write Instructions and Atomic Bit Manipulation
  - Performing up to 1.51 DMIPS/MHz
    - Up to 126 DMIPS Running at 84 MHz from Flash (1 Wait-State)
    - Up to 63 DMIPS Running at 42 MHz from Flash (0 Wait-State)
  - Memory Protection Unit
- Multi-Layer Bus System
  - High-Performance Data Transfers on Separate Buses for Increased Performance
  - 8 Peripheral DMA Channels (PDCA) Improves Speed for Peripheral Communication
  - 4 generic DMA Channels for High Bandwidth Data Paths
- Internal High-Speed Flash
  - 256 KBytes, 128 KBytes, 64 KBytes versions
  - Single-Cycle Flash Access up to 36 MHz
  - Prefetch Buffer Optimizing Instruction Execution at Maximum Speed
  - 4 ms Page Programming Time and 8 ms Full-Chip Erase Time
  - 100,000 Write Cycles, 15-year Data Retention Capability
  - Flash Security Locks and User Defined Configuration Area
- Internal High-Speed SRAM
  - 64 KBytes Single-Cycle Access at Full Speed, Connected to CPU Local Bus
  - 64 KBytes (2x32KBytes with independent access) on the Multi-Layer Bus System
- Interrupt Controller
  - Autovectored Low Latency Interrupt Service with Programmable Priority
- System Functions
  - Power and Clock Manager Including Internal RC Clock and One 32 KHz Oscillator
  - Two Multipurpose Oscillators and Two Phase-Lock-Loop (PLL),
  - Watchdog Timer, Real-Time Clock Timer
- External Memories
  - Support SDRAM, SRAM, NandFlash (1-bit and 4-bit ECC), Compact Flash
  - Up to 66 MHz
- External Storage device support
  - MultiMediaCard (MMC V4.3), Secure-Digital (SD V2.0), SDIO V1.1
  - CE-ATA V1.1, FastSD, SmartMedia, Compact Flash
  - Memory Stick: Standard Format V1.40, PRO Format V1.00, Micro
  - IDE Interface
- One Advanced Encryption System (AES) for AT32UC3A3256S, AT32UC3A3128S, AT32UC3A364S, AT32UC3A4256S, AT32UC3A4128S and AT32UC3A364S
  - 256-, 192-, 128-bit Key Algorithm, Compliant with FIPS PUB 197 Specifications
  - Buffer Encryption/Decryption Capabilities
- Universal Serial Bus (USB)
  - High-Speed USB 2.0 (480 Mbit/s) Device and Embedded Host
  - Flexible End-Point Configuration and Management with Dedicated DMA Channels
  - On-Chip Transceivers Including Pull-Ups
- One 8-channel 10-bit Analog-To-Digital Converter, multiplexed with Digital IOs.
- Two Three-Channel 16-bit Timer/Counter (TC)
- Four Universal Synchronous/Asynchronous Receiver/Transmitters (USART)
  - Fractionnal Baudrate Generator

32-bit AVR Microcontroller

AT32UC3A3256S
AT32UC3A3256
AT32UC3A3128S
AT32UC3A3128
AT32UC3A364S
AT32UC3A364
AT32UC3A4256S
AT32UC3A4256
AT32UC3A4128S
AT32UC3A4128
AT32UC3A464S
AT32UC3A464

Summary

32072SH-AVR32–10/2012

  - Support for SPI and LIN
  - Optionnal support for IrDA, ISO7816, Hardware Handshaking, RS485 interfaces and Modem Line
- Two Master/Slave Serial Peripheral Interfaces (SPI) with Chip Select Signals
- One Synchronous Serial Protocol Controller
  - Supports I2S and Generic Frame-Based Protocols
- Two Master/Slave Two-Wire Interface (TWI), 400 kbit/s I2C-compatible
- 16-bit Stereo Audio Bitstream
  - Sample Rate Up to 50 KHz
- QTouch® Library Support
  - Capacitive Touch Buttons, Sliders, and Wheels
  - QTouch and QMatrix Acquisition
- On-Chip Debug System (JTAG interface)
  - Nexus Class 2+, Runtime Control, Non-Intrusive Data and Program Trace
- 110 General Purpose Input/Output (GPIOs)
  - Standard or High Speed mode
  - Toggle capability: up to 84 MHz
- Packages
  - 144-ball TFBGA, 11x11 mm, pitch 0.8 mm
  - 144-pin LQFP, 22x22 mm, pitch 0.5 mm
  - 100-ball VFBGA, 7x7 mm, pitch 0.65 mm
- Single 3.3 V Power Supply

1. Description

The AT32UC3A3/A4 is a complete System-On-Chip microcontroller based on the AVR32 UC RISC processor running at frequencies up to 84MHz. AVR32 UC is a high-performance 32-bit RISC microprocessor core, designed for cost-sensitive embedded applications, with particular emphasis on low power consumption, high code density and high performance.

The processor implements a Memory Protection Unit (MPU) and a fast and flexible interrupt controller for supporting modern operating systems and real-time operating systems. Higher computation capabilities are achievable using a rich set of DSP instructions.

The AT32UC3A3/A4 incorporates on-chip Flash and SRAM memories for secure and fast access. 64 KBytes of SRAM are directly coupled to the AVR32 UC for performances optimization. Two blocks of 32 Kbytes SRAM are independently attached to the High Speed Bus Matrix, allowing real ping-pong management.

The Peripheral Direct Memory Access Controller (PDCA) enables data transfers between peripherals and memories without processor involvement. The PDCA drastically reduces processing overhead when transferring continuous and large data streams.

The Power Manager improves design flexibility and security: the on-chip Brown-Out Detector monitors the power supply, the CPU runs from the on-chip RC oscillator or from one of external oscillator sources, a Real-Time Clock and its associated timer keeps track of the time.

The device includes two sets of three identical 16-bit Timer/Counter (TC) channels. Each channel can be independently programmed to perform frequency measurement, event counting, interval measurement, pulse generation, delay timing and pulse width modulation. 16-bit channels are combined to operate as 32-bit channels.

The AT32UC3A3/A4 also features many communication interfaces for communication intensive applications like UART, SPI or TWI. The USART supports different communication modes, like SPI Mode and LIN Mode. Additionally, a flexible Synchronous Serial Controller (SSC) is available. The SSC provides easy access to serial communication protocols and audio standards like I2S.

The AT32UC3A3/A4 includes a powerfull External Bus Interface to interface all standard memory device like SRAM, SDRAM, NAND Flash or parallel interfaces like LCD Module.

The peripheral set includes a High Speed MCI for SDIO/SD/MMC and a hardware encryption module based on AES algorithm.

The device embeds a 10-bit ADC and a Digital Audio bistream DAC.

The Direct Memory Access controller (DMACA) allows high bandwidth data flows between high speed peripherals (USB, External Memories, MMC, SDIO, ...) and through high speed internal features (AES, internal memories).

The High-Speed (480MBit/s) USB 2.0 Device and Host interface supports several USB Classes at the same time thanks to the rich Endpoint configuration. The Embedded Host interface allows device like a USB Flash disk or a USB printer to be directly connected to the processor. This periphal has its own dedicated DMA and is perfect for Mass Storage application.

AT32UC3A3/A4 integrates a class 2+ Nexus 2.0 On-Chip Debug (OCD) System, with non-intrusive real-time trace, full-speed read/write memory access in addition to basic runtime control.

2. Overview

2.1 Block Diagram

Figure 2-1. Block Diagram

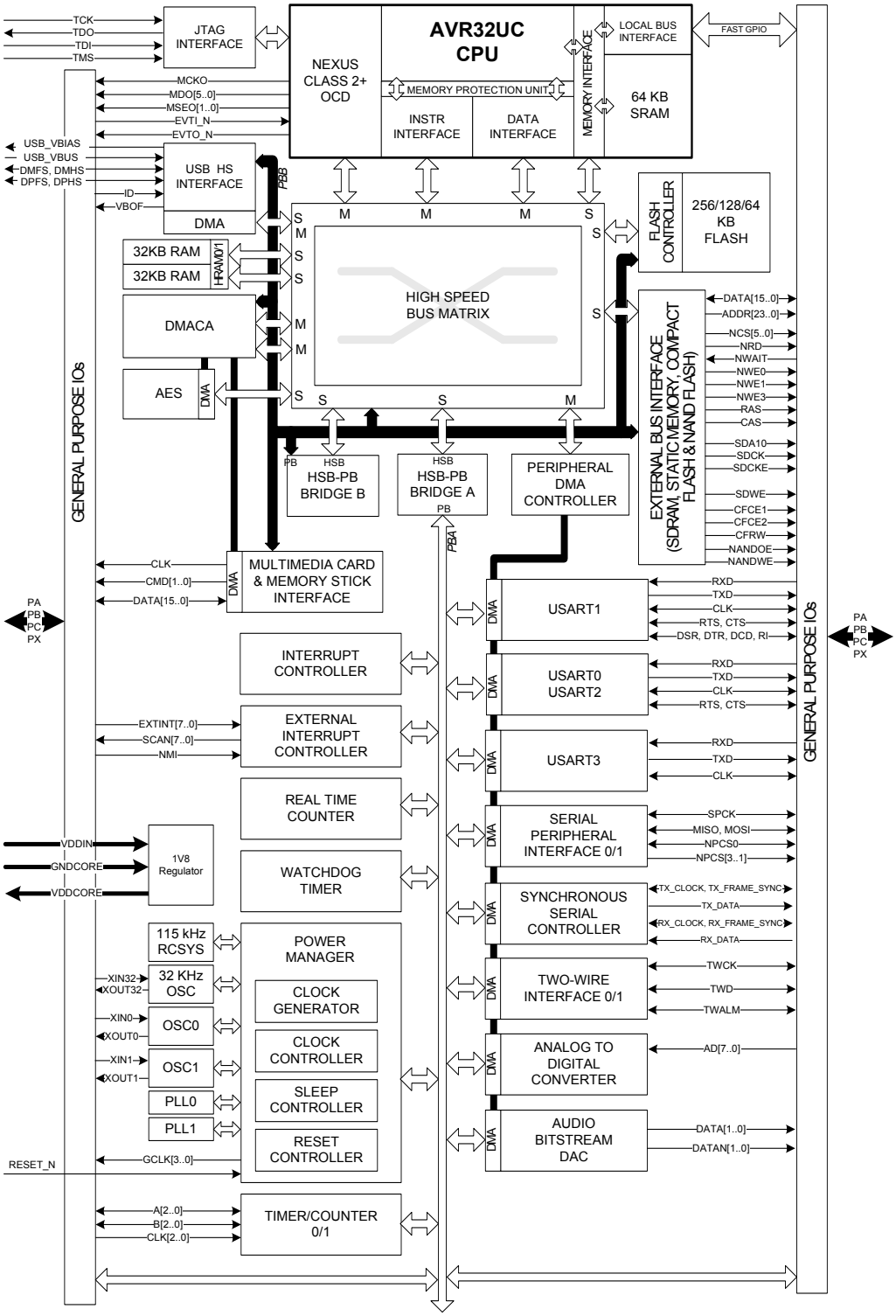

2.2 Configuration Summary

The table below lists all AT32UC3A3/A4 memory and package configurations:

Table 2-1. Configuration Summary

Feature	AT32UC3A3256/128/64	AT32UC3A4256/128/64
Flash	256/128/64 KB	
SRAM	64 KB	
HSB RAM	64 KB	
EBI	Full	Nand flash only
GPIO	110	70
External Interrupts	8	
TWI	2	
USART	4	
Peripheral DMA Channels	8	
Generic DMA Channels	4	
SPI	2	
MCI slots	2 MMC/SD slots	1 MMC/SD slot + 1 SD slot
High Speed USB	1	
AES (S option)	1	
SSC	1	
Audio Bitstream DAC	1	
Timer/Counter Channels	6	
Watchdog Timer	1	
Real-Time Clock Timer	1	
Power Manager	1	
Oscillators	PLL 80-240 MHz (PLL0/PLL1) Crystal Oscillators 0.4-20 MHz (OSC0/OSC1) Crystal Oscillator 32 KHz (OSC32K) RC Oscillator 115 kHz (RCSYS)	
10-bit ADC number of channels	1 8	
JTAG	1	
Max Frequency	84 MHz	
Package	LQFP144, TFBGA144	VFBGA100

3. Package and Pinout

3.1 Package

The device pins are multiplexed with peripheral functions as described in the Peripheral Multiplexing on I/O Line section.

Figure 3-1. TFBGA144 Pinout (top view)

	1	2	3	4	5	6	7	8	9	10	11	12
A	PX40	PB00	PA28	PA27	PB03	PA29	PC02	PC04	PC05	DPHS	DMHS	USB_VBUS
B	PX10	PB11	PA31	PB02	VDDIO	PB04	PC03	VDDIO	USB_VBIAS	DMFS	GNDPLL	PA09
C	PX09	PX35	GNDIO	PB01	PX16	PX13	PA30	PB08	DPFS	GNDCORE	PA08	PA10
D	PX08	PX37	PX36	PX47	PX19	PX12	PB10	PA02	PA26	PA11	PB07	PB06
E	PX38	VDDIO	PX54	PX53	VDDIO	PX15	PB09	VDDIN	PA25	PA07	VDDCORE	PA12
F	PX39	PX07	PX06	PX49	PX48	GNDIO	GNDIO	PA06	PA04	PA05	PA13	PA16
G	PX00	PX05	PX59	PX50	PX51	GNDIO	GNDIO	PA23	PA24	PA03	PA00	PA01
H	PX01	VDDIO	PX58	PX57	VDDIO	PC01	PA17	VDDIO	PA21	PA22	VDDANA	PB05
J	PX04	PX02	PX34	PX56	PX55	PA14	PA15	PA19	PA20	TMS	TDO	RESET_N
K	PX03	PX44	GNDIO	PX46	PC00	PX17	PX52	PA18	PX27	GNDIO	PX29	TCK
L	PX11	GNDIO	PX45	PX20	VDDIO	PX18	PX43	VDDIN	PX26	PX28	GNDANA	TDI
M	PX22	PX41	PX42	PX14	PX21	PX23	PX24	PX25	PX32	PX31	PX30	PX33

Figure 3-2. LQFP144 Pinout

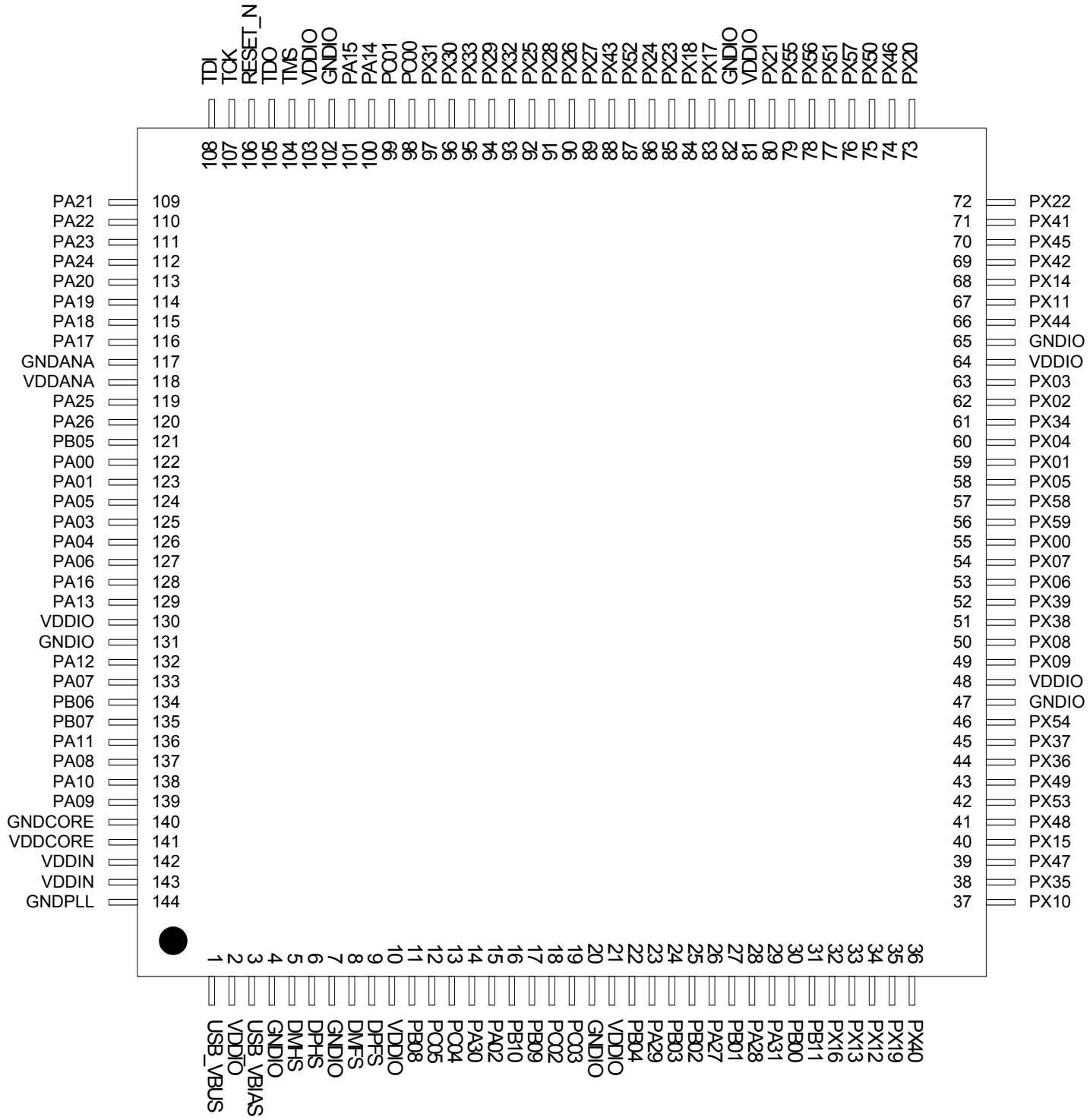

Figure 3-3. VFBGA100 Pinout (top view)

	1	2	3	4	5	6	7	8	9	10
A	PA28	PA27	PB04	PA30	PC02	PC03	PC05	DPHS	DMHS	USB_VBUS
B	PB00	PB01	PB02	PA29	VDDIO	VDDIO	PC04	DPFS	DMFS	GNDPLL
C	PB11	PA31	GNDIO	PB03	PB09	PB08	USB_VBIAS	GNDIO	PA11	PA10
D	PX12	PX10	PX13	PX16/ PX53[1]	PB10	PB07	PB06	PA09	VDDIN	VDDIN
E	PA02/ PX47[1]	GNDIO	PX08	PX09	VDDIO	GNDIO	PA16	PA06/ PA13[1]	PA04	VDDCORE
F	PX19/ PX59[1]	VDDIO	PX06	PX07	GNDIO	VDDIO	PA26/ PB05[1]	PA08	PA03	GNDCORE
G	PX05	PX01	PX02	PX00	PX30	PA23/ PX46[1]	PA12/ PA25[1]	PA00/ PA18[1]	PA05	PA01/ PA17[1]
H	PX04	PX21	GNDIO	PX25	PX31	PA22/ PX20[1]	TMS	GNDANA	PA20/ PX18[1]	PA07/ PA19[1]
J	PX03	PX24	PX26	PX29	VDDIO	VDDANA	PA15/ PX45[1]	TDO	RESET_N	PA24/ PX17[1]
K	PX23	PX27	PX28	PX15/ PX32[1]	PC00/ PX14[1]	PC01	PA14/ PX11[1]	TDI	TCK	PA21/ PX22[1]

Note: 1. Those balls are physically connected to 2 GPIOs. Software must managed carrefully the GPIO configuration to avoid electrical conflict

3.2 Peripheral Multiplexing on I/O lines

3.2.1 Multiplexed Signals

Each GPIO line can be assigned to one of the peripheral functions. The following table describes the peripheral signals multiplexed to the GPIO lines.

Note that GPIO 44 is physically implemented in silicon but it must be kept unused and configured in input mode.

Table 3-1. GPIO Controller Function Multiplexing

BGA 144	QFP 144	BGA 100	PIN	GPIO	Supply	PIN Type (2)	GPIO function			
							A	B	C	D
G11	122	G8(1)	PA00	0	VDDIO	x3	USART0 - RTS	TC0 - CLK1	SPI1 - NPCS[3]	
G12	123	G10(1)	PA01	1	VDDIO	x1	USART0 - CTS	TC0 - A1	USART2 - RTS	
D8	15	E1(1)	PA02	2	VDDIO	x1	USART0 - CLK	TC0 - B1	SPI0 - NPCS[0]	
G10	125	F9	PA03	3	VDDIO	x1	USART0 - RXD	EIC - EXTINT[4]	ABDAC - DATA[0]	
F9	126	E9	PA04	4	VDDIO	x1	USART0 - TXD	EIC - EXTINT[5]	ABDAC - DATAN[0]	
F10	124	G9	PA05	5	VDDIO	x1	USART1 - RXD	TC1 - CLK0	USB - ID	
F8	127	E8(1)	PA06	6	VDDIO	x1	USART1 - TXD	TC1 - CLK1	USB - VBOF	
E10	133	H10(1)	PA07	7	VDDIO	x1	SPI0 - NPCS[3]	ABDAC - DATAN[0]	USART1 - CLK	
C11	137	F8	PA08	8	VDDIO	x3	SPI0 - SPCK	ABDAC - DATA[0]	TC1 - B1	
B12	139	D8	PA09	9	VDDIO	x2	SPI0 - NPCS[0]	EIC - EXTINT[6]	TC1 - A1	
C12	138	C10	PA10	10	VDDIO	x2	SPI0 - MOSI	USB - VBOF	TC1 - B0	
D10	136	C9	PA11	11	VDDIO	x2	SPI0 - MISO	USB - ID	TC1 - A2	
E12	132	G7(1)	PA12	12	VDDIO	x1	USART1 - CTS	SPI0 - NPCS[2]	TC1 - A0	
F11	129	E8(1)	PA13	13	VDDIO	x1	USART1 - RTS	SPI0 - NPCS[1]	EIC - EXTINT[7]	
J6	100	K7(1)	PA14	14	VDDIO	x1	SPI0 - NPCS[1]	TWIMS0 - TWALM	TWIMS1 - TWCK	
J7	101	J7(1)	PA15	15	VDDIO	x1	MCI - CMD[1]	SPI1 - SPCK	TWIMS1 - TWD	
F12	128	E7	PA16	16	VDDIO	x1	MCI - DATA[11]	SPI1 - MOSI	TC1 - CLK2	
H7	116	G10(1)	PA17	17	VDDANA	x1	MCI - DATA[10]	SPI1 - NPCS[1]	ADC - AD[7]	
K8	115	G8(1)	PA18	18	VDDANA	x1	MCI - DATA[9]	SPI1 - NPCS[2]	ADC - AD[6]	
J8	114	H10(1)	PA19	19	VDDANA	x1	MCI - DATA[8]	SPI1 - MISO	ADC - AD[5]	
J9	113	H9(1)	PA20	20	VDDANA	x1	EIC - NMI	SSC - RX_FRAME_SYNC	ADC - AD[4]	
H9	109	K10(1)	PA21	21	VDDANA	x1	ADC - AD[0]	EIC - EXTINT[0]	USB - ID	
H10	110	H6(1)	PA22	22	VDDANA	x1	ADC - AD[1]	EIC - EXTINT[1]	USB - VBOF	
G8	111	G6(1)	PA23	23	VDDANA	x1	ADC - AD[2]	EIC - EXTINT[2]	ABDAC - DATA[1]	
G9	112	J10(1)	PA24	24	VDDANA	x1	ADC - AD[3]	EIC - EXTINT[3]	ABDAC - DATAN[1]	
E9	119	G7(1)	PA25	25	VDDIO	x1	TWIMS0 - TWD	TWIMS1 - TWALM	USART1 - DCD	
D9	120	F7(1))	PA26	26	VDDIO	x1	TWIMS0 - TWCK	USART2 - CTS	USART1 - DSR	
A4	26	A2	PA27	27	VDDIO	x2	MCI - CLK	SSC - RX_DATA	USART3 - RTS	MSI - SCLK
A3	28	A1	PA28	28	VDDIO	x1	MCI - CMD[0]	SSC - RX_CLOCK	USART3 - CTS	MSI - BS
A6	23	B4	PA29	29	VDDIO	x1	MCI - DATA[0]	USART3 - TXD	TC0 - CLK0	MSI - DATA[0]

Table 3-1. GPIO Controller Function Multiplexing

BGA 144	QFP 144	BGA 100	PIN	GPIO	Supply	PIN Type (2)	GPIO function			
							A	B	C	D
C7	14	A4	PA30	30	VDDIO	x1	MCI - DATA[1]	USART3 - CLK	DMACA - DMAACK[0]	MSI - DATA[1]
B3	29	C2	PA31	31	VDDIO	x1	MCI - DATA[2]	USART2 - RXD	DMACA - DMARQ[0]	MSI - DATA[2]
A2	30	B1	PB00	32	VDDIO	x1	MCI - DATA[3]	USART2 - TXD	ADC - TRIGGER	MSI - DATA[3]
C4	27	B2	PB01	33	VDDIO	x1	MCI - DATA[4]	ABDAC - DATA[1]	EIC - SCAN[0]	MSI - INS
B4	25	B3	PB02	34	VDDIO	x1	MCI - DATA[5]	ABDAC - DATAN[1]	EIC - SCAN[1]	
A5	24	C4	PB03	35	VDDIO	x1	MCI - DATA[6]	USART2 - CLK	EIC - SCAN[2]	
B6	22	A3	PB04	36	VDDIO	x1	MCI - DATA[7]	USART3 - RXD	EIC - SCAN[3]	
H12	121	F7(1)	PB05	37	VDDIO	x3	USB - ID	TC0 - A0	EIC - SCAN[4]	
D12	134	D7	PB06	38	VDDIO	x1	USB - VBOF	TC0 - B0	EIC - SCAN[5]	
D11	135	D6	PB07	39	VDDIO	x3	SPI1 - SPCK	SSC - TX_CLOCK	EIC - SCAN[6]	
C8	11	C6	PB08	40	VDDIO	x2	SPI1 - MISO	SSC - TX_DATA	EIC - SCAN[7]	
E7	17	C5	PB09	41	VDDIO	x2	SPI1 - NPCS[0]	SSC - RX_DATA	EBI - NCS[4]	
D7	16	D5	PB10	42	VDDIO	x2	SPI1 - MOSI	SSC - RX_FRAME_SYNC	EBI - NCS[5]	
B2	31	C1	PB11	43	VDDIO	x1	USART1 - RXD	SSC - TX_FRAME_SYNC	PM - GCLK[1]	
K5	98	K5(1)	PC00	45	VDDIO	x1				
H6	99	K6	PC01	46	VDDIO	x1				
A7	18	A5	PC02	47	VDDIO	x1				
B7	19	A6	PC03	48	VDDIO	x1				
A8	13	B7	PC04	49	VDDIO	x1				
A9	12	A7	PC05	50	VDDIO	x1				
G1	55	G4	PX00	51	VDDIO	x2	EBI - DATA[10]	USART0 - RXD	USART1 - RI	
H1	59	G2	PX01	52	VDDIO	x2	EBI - DATA[9]	USART0 - TXD	USART1 - DTR	
J2	62	G3	PX02	53	VDDIO	x2	EBI - DATA[8]	USART0 - CTS	PM - GCLK[0]	
K1	63	J1	PX03	54	VDDIO	x2	EBI - DATA[7]	USART0 - RTS		
J1	60	H1	PX04	55	VDDIO	x2	EBI - DATA[6]	USART1 - RXD		
G2	58	G1	PX05	56	VDDIO	x2	EBI - DATA[5]	USART1 - TXD		
F3	53	F3	PX06	57	VDDIO	x2	EBI - DATA[4]	USART1 - CTS		
F2	54	F4	PX07	58	VDDIO	x2	EBI - DATA[3]	USART1 - RTS		
D1	50	E3	PX08	59	VDDIO	x2	EBI - DATA[2]	USART3 - RXD		
C1	49	E4	PX09	60	VDDIO	x2	EBI - DATA[1]	USART3 - TXD		
B1	37	D2	PX10	61	VDDIO	x2	EBI - DATA[0]	USART2 - RXD		
L1	67	K7(1)	PX11	62	VDDIO	x2	EBI - NWE1	USART2 - TXD		
D6	34	D1	PX12	63	VDDIO	x2	EBI - NWE0	USART2 - CTS	MCI - CLK	
C6	33	D3	PX13	64	VDDIO	x2	EBI - NRD	USART2 - RTS	MCI - CLK	
M4	68	K5(1)	PX14	65	VDDIO	x2	EBI - NCS[1]		TC0 - A0	
E6	40	K4(1)	PX15	66	VDDIO	x2	EBI - ADDR[19]	USART3 - RTS	TC0 - B0	
C5	32	D4(1)	PX16	67	VDDIO	x2	EBI - ADDR[18]	USART3 - CTS	TC0 - A1	
K6	83	J10(1)	PX17	68	VDDIO	x2	EBI - ADDR[17]	DMACA - DMARQ[1]	TC0 - B1	

Table 3-1. GPIO Controller Function Multiplexing

BGA 144	QFP 144	BGA 100	PIN	GPIO	Supply	PIN Type (2)	GPIO function			
							A	B	C	D
L6	84	H9(1)	PX18	69	VDDIO	x2	EBI - ADDR[16]	DMACA - DMAACK[1]	TC0 - A2	
D5	35	F1(1)	PX19	70	VDDIO	x2	EBI - ADDR[15]	EIC - SCAN[0]	TC0 - B2	
L4	73	H6(1)	PX20	71	VDDIO	x2	EBI - ADDR[14]	EIC - SCAN[1]	TC0 - CLK0	
M5	80	H2	PX21	72	VDDIO	x2	EBI - ADDR[13]	EIC - SCAN[2]	TC0 - CLK1	
M1	72	K10(1)	PX22	73	VDDIO	x2	EBI - ADDR[12]	EIC - SCAN[3]	TC0 - CLK2	
M6	85	K1	PX23	74	VDDIO	x2	EBI - ADDR[11]	EIC - SCAN[4]	SSC - TX_CLOCK	
M7	86	J2	PX24	75	VDDIO	x2	EBI - ADDR[10]	EIC - SCAN[5]	SSC - TX_DATA	
M8	92	H4	PX25	76	VDDIO	x2	EBI - ADDR[9]	EIC - SCAN[6]	SSC - RX_DATA	
L9	90	J3	PX26	77	VDDIO	x2	EBI - ADDR[8]	EIC - SCAN[7]	SSC - RX_FRAME_SYNC	
K9	89	K2	PX27	78	VDDIO	x2	EBI - ADDR[7]	SPI0 - MISO	SSC - TX_FRAME_SYNC	
L10	91	K3	PX28	79	VDDIO	x2	EBI - ADDR[6]	SPI0 - MOSI	SSC - RX_CLOCK	
K11	94	J4	PX29	80	VDDIO	x2	EBI - ADDR[5]	SPI0 - SPCK		
M11	96	G5	PX30	81	VDDIO	x2	EBI - ADDR[4]	SPI0 - NPCS[0]		
M10	97	H5	PX31	82	VDDIO	x2	EBI - ADDR[3]	SPI0 - NPCS[1]		
M9	93	K4(1)	PX32	83	VDDIO	x2	EBI - ADDR[2]	SPI0 - NPCS[2]		
M12	95		PX33	84	VDDIO	x2	EBI - ADDR[1]	SPI0 - NPCS[3]		
J3	61		PX34	85	VDDIO	x2	EBI - ADDR[0]	SPI1 - MISO	PM - GCLK[0]	
C2	38		PX35	86	VDDIO	x2	EBI - DATA[15]	SPI1 - MOSI	PM - GCLK[1]	
D3	44		PX36	87	VDDIO	x2	EBI - DATA[14]	SPI1 - SPCK	PM - GCLK[2]	
D2	45		PX37	88	VDDIO	x2	EBI - DATA[13]	SPI1 - NPCS[0]	PM - GCLK[3]	
E1	51		PX38	89	VDDIO	x2	EBI - DATA[12]	SPI1 - NPCS[1]	USART1 - DCD	
F1	52		PX39	90	VDDIO	x2	EBI - DATA[11]	SPI1 - NPCS[2]	USART1 - DSR	
A1	36		PX40	91	VDDIO	x2		MCI - CLK		
M2	71		PX41	92	VDDIO	x2	EBI - CAS			
M3	69		PX42	93	VDDIO	x2	EBI - RAS			
L7	88		PX43	94	VDDIO	x2	EBI - SDA10	USART1 - RI		
K2	66		PX44	95	VDDIO	x2	EBI - SDWE	USART1 - DTR		
L3	70	J7(1)	PX45	96	VDDIO	x3	EBI - SDCK			
K4	74	G6(1)	PX46	97	VDDIO	x2	EBI - SDCKE			
D4	39	E1(1)	PX47	98	VDDIO	x2	EBI - NANDOE	ADC - TRIGGER	MCI - DATA[11]	
F5	41		PX48	99	VDDIO	x2	EBI - ADDR[23]	USB - VBOF	MCI - DATA[10]	
F4	43		PX49	100	VDDIO	x2	EBI - CFRNW	USB - ID	MCI - DATA[9]	
G4	75		PX50	101	VDDIO	x2	EBI - CFCE2	TC1 - B2	MCI - DATA[8]	
G5	77		PX51	102	VDDIO	x2	EBI - CFCE1	DMACA - DMAACK[0]	MCI - DATA[15]	
K7	87		PX52	103	VDDIO	x2	EBI - NCS[3]	DMACA - DMARQ[0]	MCI - DATA[14]	
E4	42	D4(1)	PX53	104	VDDIO	x2	EBI - NCS[2]		MCI - DATA[13]	
E3	46		PX54	105	VDDIO	x2	EBI - NWAIT	USART3 - TXD	MCI - DATA[12]	
J5	79		PX55	106	VDDIO	x2	EBI - ADDR[22]	EIC - SCAN[3]	USART2 - RXD	

Table 3-1. GPIO Controller Function Multiplexing

BGA 144	QFP 144	BGA 100	PIN	GPIO	Supply	PIN Type (2)	GPIO function			
							A	B	C	D
J4	78		PX56	107	VDDIO	x2	EBI - ADDR[21]	EIC - SCAN[2]	USART2 - TXD	
H4	76		PX57	108	VDDIO	x2	EBI - ADDR[20]	EIC - SCAN[1]	USART3 - RXD	
H3	57		PX58	109	VDDIO	x2	EBI - NCS[0]	EIC - SCAN[0]	USART3 - TXD	
G3	56	F1(1)	PX59	110	VDDIO	x2	EBI - NANDWE		MCI - CMD[1]	

Note: 1. Those balls are physically connected to 2 GPIOs. Software must managed carrefully the GPIO configuration to avoid electrical conflict.

2. Refer to "Electrical Characteristics" on page 40 for a description of the electrical properties of the pad types used..

3.2.2 Peripheral Functions

Each GPIO line can be assigned to one of several peripheral functions. The following table describes how the various peripheral functions are selected. The last listed function has priority in case multiple functions are enabled on the same pin.

Table 3-2. Peripheral Functions

Function	Description
GPIO Controller Function multiplexing	GPIO and GPIO peripheral selection A to D
Nexus OCD AUX port connections	OCD trace system
JTAG port connections	JTAG debug port
Oscillators	OSC0, OSC1, OSC32

3.2.3 Oscillator Pinout

The oscillators are not mapped to the normal GPIO functions and their muxings are controlled by registers in the Power Mananger (PM). Please refer to the PM chapter for more information about this.

Table 3-3. Oscillator Pinout

TFBGA144	QFP144	VFBGA100	Pin name	Oscillator pin
A7	18	A5	PC02	XIN0
B7	19	A6	PC03	XOUT0
A8	13	B7	PC04	XIN1
A9	12	A7	PC05	XOUT1
K5	98	K5(1)	PC00	XIN32
H6	99	K6	PC01	XOUT32

Note: 1. This ball is physically connected to 2 GPIOs. Software must managed carrefully the GPIO configuration to avoid electrical conflict

3.2.4 JTAG port connections

Table 3-4. JTAG Pinout

TFBGA144	QFP144	VFBGA100	Pin name	JTAG pin
K12	107	K9	TCK	TCK
L12	108	K8	TDI	TDI
J11	105	J8	TDO	TDO
J10	104	H7	TMS	TMS

3.2.5 Nexus OCD AUX port connections

If the OCD trace system is enabled, the trace system will take control over a number of pins, irrespective of the GPIO configuration. Three differents OCD trace pin mappings are possible, depending on the configuration of the OCD AXS register. For details, see the AVR32 UC Technical Reference Manual.

Table 3-5. Nexus OCD AUX port connections

Pin	AXS=0	AXS=1	AXS=2
EVTI_N	PB05	PA08	PX00
MDO[5]	PA00	PX56	PX06
MDO[4]	PA01	PX57	PX05
MDO[3]	PA03	PX58	PX04
MDO[2]	PA16	PA24	PX03
MDO[1]	PA13	PA23	PX02
MDO[0]	PA12	PA22	PX01
MSEO[1]	PA10	PA07	PX08
MSEO[0]	PA11	PX55	PX07
MCKO	PB07	PX00	PB09
EVTO_N	PB06	PB06	PB06

3.3 Signal Descriptions

The following table gives details on signal name classified by peripheral.

Table 3-6. Signal Description List

Signal Name	Function	Type	Active Level	Comments
Power				
VDDIO	I/O Power Supply	Power		3.0 to 3.6V
VDDANA	Analog Power Supply	Power		3.0 to 3.6V
VDDIN	Voltage Regulator Input Supply	Power		3.0 to 3.6V
VDDCORE	Voltage Regulator Output for Digital Supply	Power Output		1.65 to 1.95 V
GNDANA	Analog Ground	Ground		
GNDIO	I/O Ground	Ground		
GNDCORE	Digital Ground	Ground		
GNDPLL	PLL Ground	Ground		
Clocks, Oscillators, and PLL's				
XIN0, XIN1, XIN32	Crystal 0, 1, 32 Input	Analog		
XOUT0, XOUT1, XOUT32	Crystal 0, 1, 32 Output	Analog		
JTAG				
TCK	Test Clock	Input		
TDI	Test Data In	Input		
TDO	Test Data Out	Output		
TMS	Test Mode Select	Input		
Auxiliary Port - AUX				
MCKO	Trace Data Output Clock	Output		
MDO[5:0]	Trace Data Output	Output		
MSEO[1:0]	Trace Frame Control	Output		
EVTI_N	Event In	Input	Low	
EVTO_N	Event Out	Output	Low	
Power Manager - PM				
GCLK[3:0]	Generic Clock Pins	Output		

Table 3-6. Signal Description List

Signal Name	Function	Type	Active Level	Comments
RESET_N	Reset Pin	Input	Low	
DMA Controller - DMACA (optional)				
DMAACK[1:0]	DMA Acknowledge	Output		
DMARQ[1:0]	DMA Requests	Input		
External Interrupt Controller - EIC				
EXTINT[7:0]	External Interrupt Pins	Input		
SCAN[7:0]	Keypad Scan Pins	Output		
NMI	Non-Maskable Interrupt Pin	Input	Low	
General Purpose Input/Output pin - GPIOA, GPIOB, GPIOC, GPIOX				
PA[31:0]	Parallel I/O Controller GPIO port A	I/O		
PB[11:0]	Parallel I/O Controller GPIO port B	I/O		
PC[5:0]	Parallel I/O Controller GPIO port C	I/O		
PX[59:0]	Parallel I/O Controller GPIO port X	I/O		
External Bus Interface - EBI				
ADDR[23:0]	Address Bus	Output		
CAS	Column Signal	Output	Low	
CFCE1	Compact Flash 1 Chip Enable	Output	Low	
CFCE2	Compact Flash 2 Chip Enable	Output	Low	
CFRNW	Compact Flash Read Not Write	Output		
DATA[15:0]	Data Bus	I/O		
NANDOE	NAND Flash Output Enable	Output	Low	
NANDWE	NAND Flash Write Enable	Output	Low	
NCS[5:0]	Chip Select	Output	Low	
NRD	Read Signal	Output	Low	
NWAIT	External Wait Signal	Input	Low	
NWE0	Write Enable 0	Output	Low	
NWE1	Write Enable 1	Output	Low	
RAS	Row Signal	Output	Low	

Table 3-6. Signal Description List

Signal Name	Function	Type	Active Level	Comments
SDA10	SDRAM Address 10 Line	Output		
SDCK	SDRAM Clock	Output		
SDCKE	SDRAM Clock Enable	Output		
SDWE	SDRAM Write Enable	Output	Low	
MultiMedia Card Interface - MCI				
CLK	Multimedia Card Clock	Output		
CMD[1:0]	Multimedia Card Command	I/O		
DATA[15:0]	Multimedia Card Data	I/O		
Memory Stick Interface - MSI				
SCLK	Memory Stick Clock	Output		
BS	Memory Stick Command	I/O		
DATA[3:0]	Multimedia Card Data	I/O		
Serial Peripheral Interface - SPI0, SPI1				
MISO	Master In Slave Out	I/O		
MOSI	Master Out Slave In	I/O		
NPCS[3:0]	SPI Peripheral Chip Select	I/O	Low	
SPCK	Clock	Output		
Synchronous Serial Controller - SSC				
RX_CLOCK	SSC Receive Clock	I/O		
RX_DATA	SSC Receive Data	Input		
RX_FRAME_SYNC	SSC Receive Frame Sync	I/O		
TX_CLOCK	SSC Transmit Clock	I/O		
TX_DATA	SSC Transmit Data	Output		
TX_FRAME_SYNC	SSC Transmit Frame Sync	I/O		
Timer/Counter - TC0, TC1				
A0	Channel 0 Line A	I/O		
A1	Channel 1 Line A	I/O		
A2	Channel 2 Line A	I/O		

Table 3-6. Signal Description List

Signal Name	Function	Type	Active Level	Comments
B0	Channel 0 Line B	I/O		
B1	Channel 1 Line B	I/O		
B2	Channel 2 Line B	I/O		
CLK0	Channel 0 External Clock Input	Input		
CLK1	Channel 1 External Clock Input	Input		
CLK2	Channel 2 External Clock Input	Input		
Two-wire Interface - TWI0, TWI1				
TWCK	Serial Clock	I/O		
TWD	Serial Data	I/O		
TWALM	SMBALERT signal	I/O		
Universal Synchronous Asynchronous Receiver Transmitter - USART0, USART1, USART2, USART3				
CLK	Clock	I/O		
CTS	Clear To Send	Input		
DCD	Data Carrier Detect			Only USART1
DSR	Data Set Ready			Only USART1
DTR	Data Terminal Ready			Only USART1
RI	Ring Indicator			Only USART1
RTS	Request To Send	Output		
RXD	Receive Data	Input		
TXD	Transmit Data	Output		
Analog to Digital Converter - ADC				
AD0 - AD7	Analog input pins	Analog input		
Audio Bitstream DAC (ABDAC)				
DATA0-DATA1	D/A Data out	Output		
DATAN0-DATAN1	D/A Data inverted out	Output		
Universal Serial Bus Device - USB				
DMFS	USB Full Speed Data -	Analog		
DPFS	USB Full Speed Data +	Analog		

Table 3-6. Signal Description List

Signal Name	Function	Type	Active Level	Comments
DMHS	USB High Speed Data -	Analog		
DPHS	USB High Speed Data +	Analog		
USB_VBIAS	USB VBIAS reference	Analog		Connect to the ground through a 6810 ohms (+/- 1%) resistor in parallel with a 10pf capacitor. If USB hi-speed feature is not required, leave this pin unconnected to save power
USB_VBUS	USB VBUS signal	Output		
VBOF	USB VBUS on/off bus power control port	Output		
ID	ID Pin fo the USB bus	Input		

3.4 I/O Line Considerations

3.4.1 JTAG Pins

TMS and TDI pins have pull-up resistors. TDO pin is an output, driven at up to VDDIO, and has no pull-up resistor.

3.4.2 RESET_N Pin

The RESET_N pin is a schmitt input and integrates a permanent pull-up resistor to VDDIO. As the product integrates a power-on reset cell, the RESET_N pin can be left unconnected in case no reset from the system needs to be applied to the product.

3.4.3 TWI Pins

When these pins are used for TWI, the pins are open-drain outputs with slew-rate limitation and inputs with inputs with spike filtering. When used as GPIO pins or used for other peripherals, the pins have the same characteristics as other GPIO pins.

3.4.4 GPIO Pins

All the I/O lines integrate a programmable pull-up resistor. Programming of this pull-up resistor is performed independently for each I/O line through the I/O Controller. After reset, I/O lines default as inputs with pull-up resistors disabled, except when indicated otherwise in the column “Reset State” of the I/O Controller multiplexing tables.

3.5 Power Considerations

3.5.1 Power Supplies

The AT32UC3A3 has several types of power supply pins:

- **VDDIO: Powers I/O lines. Voltage is 3.3V nominal**
- **VDDANA: Powers the ADC. Voltage is 3.3V nominal**
- **VDDIN: Input voltage for the voltage regulator. Voltage is 3.3V nominal**
- **VDDCORE: Output voltage from regulator for filtering purpose and provides the supply to the core, memories, and peripherals. Voltage is 1.8V nominal**

The ground pin GNDCORE is common to VDDCORE and VDDIN. The ground pin for VDDANA is GNDANA. The ground pins for VDDIO are GNDIO.

Refer to Electrical Characteristics chapter for power consumption on the various supply pins.

3.5.2 Voltage Regulator

The AT32UC3A3 embeds a voltage regulator that converts from 3.3V to 1.8V with a load of up to 100 mA. The regulator takes its input voltage from VDDIN, and supplies the output voltage on VDDCORE and powers the core, memories and peripherals.

Adequate output supply decoupling is mandatory for VDDCORE to reduce ripple and avoid oscillations.

The best way to achieve this is to use two capacitors in parallel between VDDCORE and GNDCORE:

- One external 470 pF (or 1 nF) NPO capacitor (C_{OUT1}) should be connected as close to the chip as possible.
- One external 2.2 µF (or 3.3 µF) X7R capacitor (C_{OUT2}).

Adequate input supply decoupling is mandatory for VDDIN in order to improve startup stability and reduce source voltage drop.

The input decoupling capacitor should be placed close to the chip, e.g., two capacitors can be used in parallel (1 nF NPO and 4.7 µF X7R).

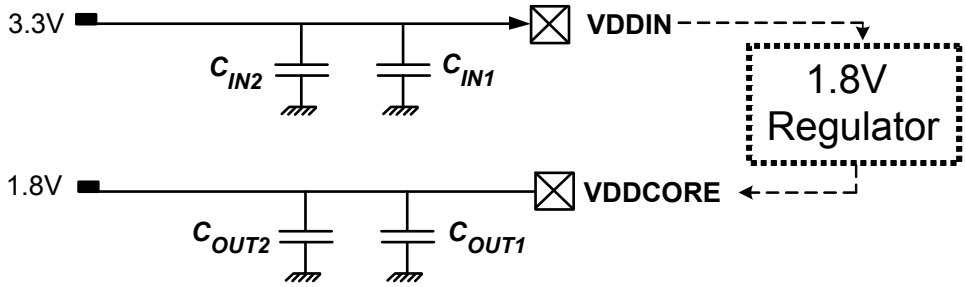

For decoupling recommendations for VDDIO and VDDANA please refer to the Schematic checklist.

4. Processor and Architecture

Rev: 1.4.2.0

This chapter gives an overview of the AVR32UC CPU. AVR32UC is an implementation of the AVR32 architecture. A summary of the programming model, instruction set, and MPU is presented. For further details, see the *AVR32 Architecture Manual* and the *AVR32UC Technical Reference Manual*.

4.1 Features

- **32-bit load/store AVR32A RISC architecture**
  - **15 general-purpose 32-bit registers**
  - **32-bit Stack Pointer, Program Counter and Link Register reside in register file**
  - **Fully orthogonal instruction set**
  - **Privileged and unprivileged modes enabling efficient and secure Operating Systems**
  - **Innovative instruction set together with variable instruction length ensuring industry leading code density**
  - **DSP extention with saturating arithmetic, and a wide variety of multiply instructions**
- **3-stage pipeline allows one instruction per clock cycle for most instructions**
  - **Byte, halfword, word and double word memory access**
  - **Multiple interrupt priority levels**
- **MPU allows for operating systems with memory protection**

4.2 AVR32 Architecture

AVR32 is a high-performance 32-bit RISC microprocessor architecture, designed for cost-sensitive embedded applications, with particular emphasis on low power consumption and high code density. In addition, the instruction set architecture has been tuned to allow a variety of micro-architectures, enabling the AVR32 to be implemented as low-, mid-, or high-performance processors. AVR32 extends the AVR family into the world of 32- and 64-bit applications.

Through a quantitative approach, a large set of industry recognized benchmarks has been compiled and analyzed to achieve the best code density in its class. In addition to lowering the memory requirements, a compact code size also contributes to the core's low power characteristics. The processor supports byte and halfword data types without penalty in code size and performance.

Memory load and store operations are provided for byte, halfword, word, and double word data with automatic sign- or zero extension of halfword and byte data. The C-compiler is closely linked to the architecture and is able to exploit code optimization features, both for size and speed.

In order to reduce code size to a minimum, some instructions have multiple addressing modes. As an example, instructions with immediates often have a compact format with a smaller immediate, and an extended format with a larger immediate. In this way, the compiler is able to use the format giving the smallest code size.

Another feature of the instruction set is that frequently used instructions, like add, have a compact format with two operands as well as an extended format with three operands. The larger format increases performance, allowing an addition and a data move in the same instruction in a single cycle. Load and store instructions have several different formats in order to reduce code size and speed up execution.

The register file is organized as sixteen 32-bit registers and includes the Program Counter, the Link Register, and the Stack Pointer. In addition, register R12 is designed to hold return values from function calls and is used implicitly by some instructions.

4.3 The AVR32UC CPU

The AVR32UC CPU targets low- and medium-performance applications, and provides an advanced OCD system, no caches, and a Memory Protection Unit (MPU). Java acceleration hardware is not implemented.

AVR32UC provides three memory interfaces, one High Speed Bus master for instruction fetch, one High Speed Bus master for data access, and one High Speed Bus slave interface allowing other bus masters to access data RAMs internal to the CPU. Keeping data RAMs internal to the CPU allows fast access to the RAMs, reduces latency, and guarantees deterministic timing. Also, power consumption is reduced by not needing a full High Speed Bus access for memory accesses. A dedicated data RAM interface is provided for communicating with the internal data RAMs.

A local bus interface is provided for connecting the CPU to device-specific high-speed systems, such as floating-point units and fast GPIO ports. This local bus has to be enabled by writing the LOCEN bit in the CPUCR system register. The local bus is able to transfer data between the CPU and the local bus slave in a single clock cycle. The local bus has a dedicated memory range allocated to it, and data transfers are performed using regular load and store instructions. Details on which devices that are mapped into the local bus space is given in the Memories chapter of this data sheet.

Figure 4-1 on page 23 displays the contents of AVR32UC.

Figure 4-1. Overview of the AVR32UC CPU

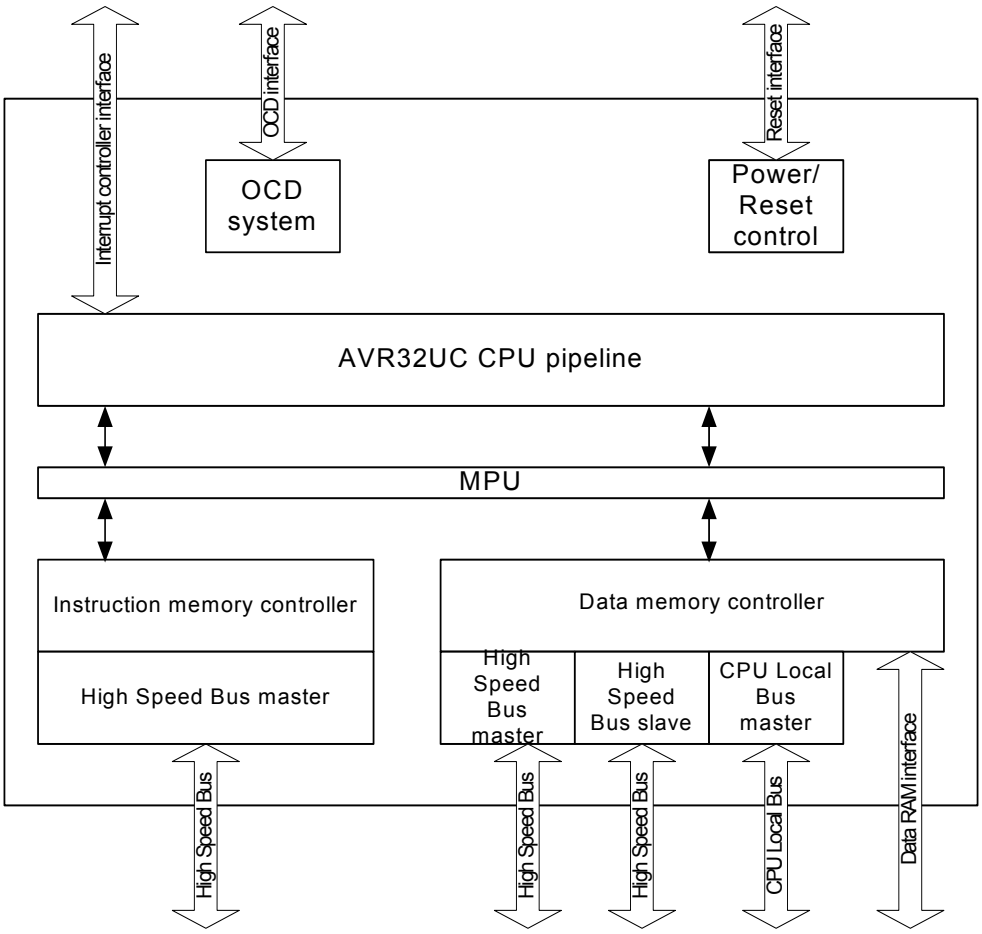

4.3.1 Pipeline Overview

AVR32UC has three pipeline stages, Instruction Fetch (IF), Instruction Decode (ID), and Instruction Execute (EX). The EX stage is split into three parallel subsections, one arithmetic/logic (ALU) section, one multiply (MUL) section, and one load/store (LS) section.

Instructions are issued and complete in order. Certain operations require several clock cycles to complete, and in this case, the instruction resides in the ID and EX stages for the required number of clock cycles. Since there is only three pipeline stages, no internal data forwarding is required, and no data dependencies can arise in the pipeline.

Figure 4-2 on page 24 shows an overview of the AVR32UC pipeline stages.

Figure 4-2. The AVR32UC Pipeline

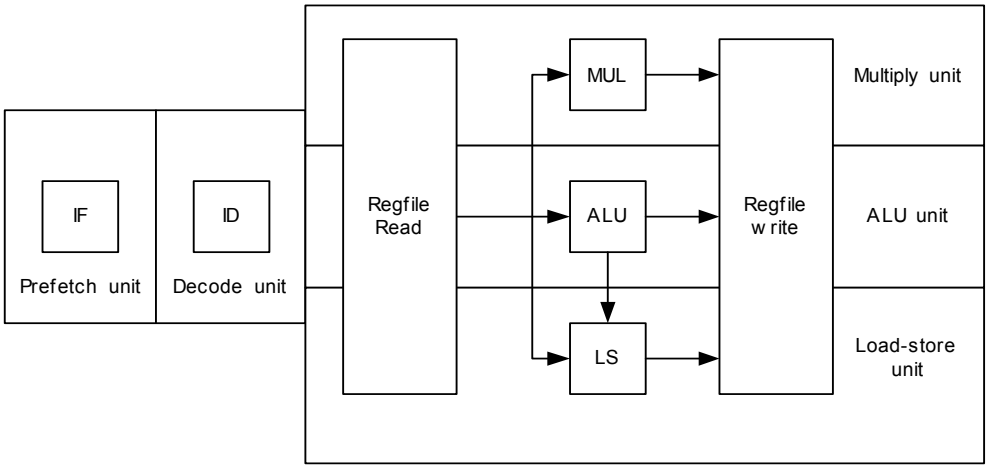

4.3.2 AVR32A Microarchitecture Compliance

AVR32UC implements an AVR32A microarchitecture. The AVR32A microarchitecture is targeted at cost-sensitive, lower-end applications like smaller microcontrollers. This microarchitecture does not provide dedicated hardware registers for shadowing of register file registers in interrupt contexts. Additionally, it does not provide hardware registers for the return address registers and return status registers. Instead, all this information is stored on the system stack. This saves chip area at the expense of slower interrupt handling.

Upon interrupt initiation, registers R8-R12 are automatically pushed to the system stack. These registers are pushed regardless of the priority level of the pending interrupt. The return address and status register are also automatically pushed to stack. The interrupt handler can therefore use R8-R12 freely. Upon interrupt completion, the old R8-R12 registers and status register are restored, and execution continues at the return address stored popped from stack.

The stack is also used to store the status register and return address for exceptions and *scall*. Executing the *rete* or *rets* instruction at the completion of an exception or system call will pop this status register and continue execution at the popped return address.

4.3.3 Java Support

AVR32UC does not provide Java hardware acceleration.

4.3.4 Memory Protection

The MPU allows the user to check all memory accesses for privilege violations. If an access is attempted to an illegal memory address, the access is aborted and an exception is taken. The MPU in AVR32UC is specified in the AVR32UC Technical Reference manual.

4.3.5 Unaligned Reference Handling

AVR32UC does not support unaligned accesses, except for doubleword accesses. AVR32UC is able to perform word-aligned *st.d* and *ld.d*. Any other unaligned memory access will cause an address exception. Doubleword-sized accesses with word-aligned pointers will automatically be performed as two word-sized accesses.

The following table shows the instructions with support for unaligned addresses. All other instructions require aligned addresses.

Table 4-1. Instructions with Unaligned Reference Support

Instruction	Supported alignment
ld.d	Word
st.d	Word

4.3.6 Unimplemented Instructions

The following instructions are unimplemented in AVR32UC, and will cause an Unimplemented Instruction Exception if executed:

- All SIMD instructions
- All coprocessor instructions if no coprocessors are present
- retj, incjosp, popjc, pushjc
- tlbr, tlbs, tlbw
- cache

4.3.7 CPU and Architecture Revision

Three major revisions of the AVR32UC CPU currently exist.

The Architecture Revision field in the CONFIG0 system register identifies which architecture revision is implemented in a specific device.

AVR32UC CPU revision 3 is fully backward-compatible with revisions 1 and 2, ie. code compiled for revision 1 or 2 is binary-compatible with revision 3 CPUs.

4.4 Programming Model

4.4.1 Register File Configuration

The AVR32UC register file is shown below.

Figure 4-3. The AVR32UC Register File

Application	Supervisor	INT0	INT1	INT2	INT3	Exception	NMI	Secure
Bit 31 Bit 0	Bit 31 Bit 0	Bit 31 Bit 0	Bit 31 Bit 0	Bit 31 Bit 0	Bit 31 Bit 0	Bit 31 Bit 0	Bit 31 Bit 0	Bit 31 Bit 0
PC	PC	PC	PC	PC	PC	PC	PC	PC
LR	LR	LR	LR	LR	LR	LR	LR	LR
SP_APP	SP_SYS	SP_SYS	SP_SYS	SP_SYS	SP_SYS	SP_SYS	SP_SYS	SP_SEC
R12	R12	R12	R12	R12	R12	R12	R12	R12
R11	R11	R11	R11	R11	R11	R11	R11	R11
R10	R10	R10	R10	R10	R10	R10	R10	R10
R9	R9	R9	R9	R9	R9	R9	R9	R9
R8	R8	R8	R8	R8	R8	R8	R8	R8
R7	R7	R7	R7	R7	R7	R7	R7	R7
R6	R6	R6	R6	R6	R6	R6	R6	R6
R5	R5	R5	R5	R5	R5	R5	R5	R5
R4	R4	R4	R4	R4	R4	R4	R4	R4
R3	R3	R3	R3	R3	R3	R3	R3	R3
R2	R2	R2	R2	R2	R2	R2	R2	R2
R1	R1	R1	R1	R1	R1	R1	R1	R1
R0	R0	R0	R0	R0	R0	R0	R0	R0
SR	SR	SR	SR	SR	SR	SR	SR	SR

SS_STATUS
SS_ADRF
SS_ADRR
SS_ADR0
SS_ADR1
SS_SP_SYS
SS_SP_APP
SS_RAR
SS_RSR

4.4.2 Status Register Configuration

The Status Register (SR) is split into two halfwords, one upper and one lower, see Figure 4-4 on page 26 and Figure 4-5 on page 27. The lower word contains the C, Z, N, V, and Q condition code flags and the R, T, and L bits, while the upper halfword contains information about the mode and state the processor executes in. Refer to the *AVR32 Architecture Manual* for details.

Figure 4-4. The Status Register High Halfword

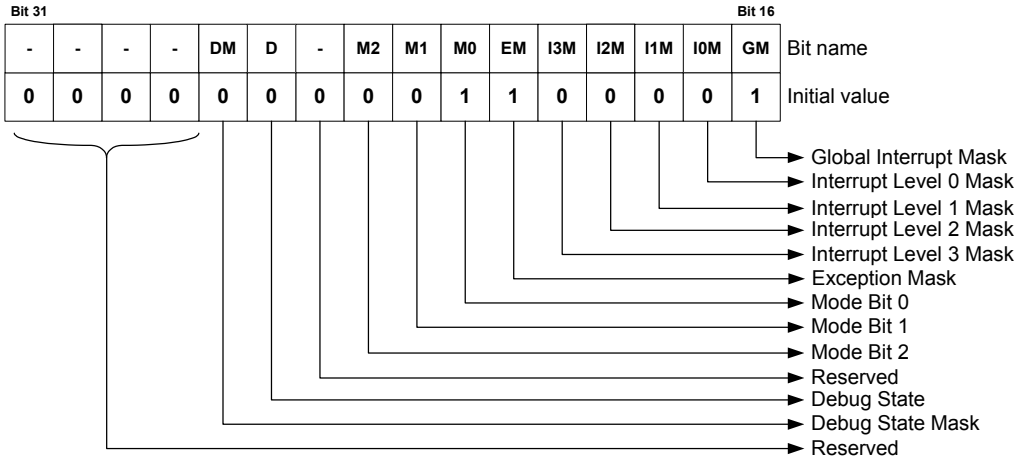

Figure 4-5. The Status Register Low Halfword

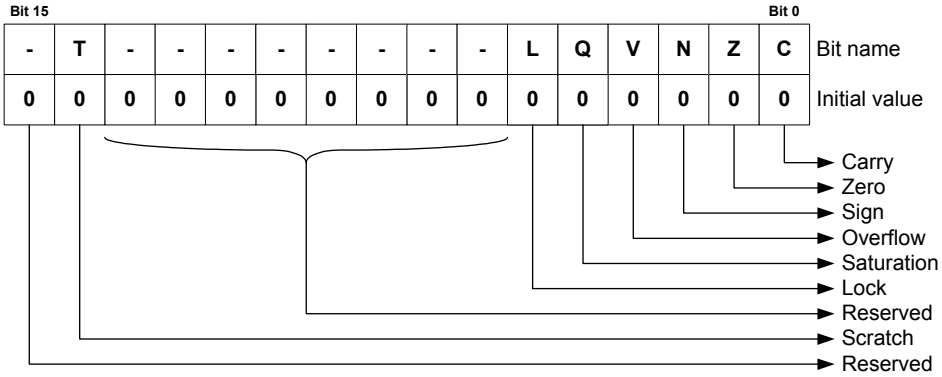

4.4.3 Processor States

4.4.3.1 Normal RISC State

The AVR32 processor supports several different execution contexts as shown in Table 4-2 on page 27.

Table 4-2. Overview of Execution Modes, their Priorities and Privilege Levels.

Priority	Mode	Security	Description
1	Non Maskable Interrupt	Privileged	Non Maskable high priority interrupt mode
2	Exception	Privileged	Execute exceptions
3	Interrupt 3	Privileged	General purpose interrupt mode
4	Interrupt 2	Privileged	General purpose interrupt mode
5	Interrupt 1	Privileged	General purpose interrupt mode
6	Interrupt 0	Privileged	General purpose interrupt mode
N/A	Supervisor	Privileged	Runs supervisor calls
N/A	Application	Unprivileged	Normal program execution mode

Mode changes can be made under software control, or can be caused by external interrupts or exception processing. A mode can be interrupted by a higher priority mode, but never by one with lower priority. Nested exceptions can be supported with a minimal software overhead.

When running an operating system on the AVR32, user processes will typically execute in the application mode. The programs executed in this mode are restricted from executing certain instructions. Furthermore, most system registers together with the upper halfword of the status register cannot be accessed. Protected memory areas are also not available. All other operating modes are privileged and are collectively called System Modes. They have full access to all privileged and unprivileged resources. After a reset, the processor will be in supervisor mode.

4.4.3.2 Debug State

The AVR32 can be set in a debug state, which allows implementation of software monitor routines that can read out and alter system information for use during application development. This implies that all system and application registers, including the status registers and program counters, are accessible in debug state. The privileged instructions are also available.

All interrupt levels are by default disabled when debug state is entered, but they can individually be switched on by the monitor routine by clearing the respective mask bit in the status register.

Debug state can be entered as described in the *AVR32UC Technical Reference Manual*.

Debug state is exited by the *retd* instruction.

4.4.4 System Registers

The system registers are placed outside of the virtual memory space, and are only accessible using the privileged *mfsr* and *mtsr* instructions. The table below lists the system registers specified in the AVR32 architecture, some of which are unused in AVR32UC. The programmer is responsible for maintaining correct sequencing of any instructions following a *mtsr* instruction. For detail on the system registers, refer to the *AVR32UC Technical Reference Manual*.

Table 4-3. System Registers

Reg #	Address	Name	Function
0	0	SR	Status Register
1	4	EVBA	Exception Vector Base Address
2	8	ACBA	Application Call Base Address
3	12	CPUCR	CPU Control Register
4	16	ECR	Exception Cause Register
5	20	RSR_SUP	Unused in AVR32UC
6	24	RSR_INT0	Unused in AVR32UC
7	28	RSR_INT1	Unused in AVR32UC
8	32	RSR_INT2	Unused in AVR32UC
9	36	RSR_INT3	Unused in AVR32UC
10	40	RSR_EX	Unused in AVR32UC
11	44	RSR_NMI	Unused in AVR32UC
12	48	RSR_DBG	Return Status Register for Debug mode
13	52	RAR_SUP	Unused in AVR32UC
14	56	RAR_INT0	Unused in AVR32UC
15	60	RAR_INT1	Unused in AVR32UC
16	64	RAR_INT2	Unused in AVR32UC
17	68	RAR_INT3	Unused in AVR32UC
18	72	RAR_EX	Unused in AVR32UC
19	76	RAR_NMI	Unused in AVR32UC
20	80	RAR_DBG	Return Address Register for Debug mode
21	84	JECR	Unused in AVR32UC
22	88	JOSP	Unused in AVR32UC
23	92	JAVA_LV0	Unused in AVR32UC
24	96	JAVA_LV1	Unused in AVR32UC
25	100	JAVA_LV2	Unused in AVR32UC

Table 4-3. System Registers (Continued)

Reg #	Address	Name	Function
26	104	JAVA_LV3	Unused in AVR32UC
27	108	JAVA_LV4	Unused in AVR32UC
28	112	JAVA_LV5	Unused in AVR32UC
29	116	JAVA_LV6	Unused in AVR32UC
30	120	JAVA_LV7	Unused in AVR32UC
31	124	JTBA	Unused in AVR32UC
32	128	JBCR	Unused in AVR32UC
33-63	132-252	Reserved	Reserved for future use
64	256	CONFIG0	Configuration register 0
65	260	CONFIG1	Configuration register 1
66	264	COUNT	Cycle Counter register
67	268	COMPARE	Compare register
68	272	TLBEHI	Unused in AVR32UC
69	276	TLBELO	Unused in AVR32UC
70	280	PTBR	Unused in AVR32UC
71	284	TLBEAR	Unused in AVR32UC
72	288	MMUCR	Unused in AVR32UC
73	292	TLBARLO	Unused in AVR32UC
74	296	TLBARHI	Unused in AVR32UC
75	300	PCCNT	Unused in AVR32UC
76	304	PCNT0	Unused in AVR32UC
77	308	PCNT1	Unused in AVR32UC
78	312	PCCR	Unused in AVR32UC
79	316	BEAR	Bus Error Address Register
80	320	MPUAR0	MPU Address Register region 0
81	324	MPUAR1	MPU Address Register region 1
82	328	MPUAR2	MPU Address Register region 2
83	332	MPUAR3	MPU Address Register region 3
84	336	MPUAR4	MPU Address Register region 4
85	340	MPUAR5	MPU Address Register region 5
86	344	MPUAR6	MPU Address Register region 6
87	348	MPUAR7	MPU Address Register region 7
88	352	MPUPSR0	MPU Privilege Select Register region 0
89	356	MPUPSR1	MPU Privilege Select Register region 1
90	360	MPUPSR2	MPU Privilege Select Register region 2
91	364	MPUPSR3	MPU Privilege Select Register region 3

Table 4-3. System Registers (Continued)

Reg #	Address	Name	Function
92	368	MPUPSR4	MPU Privilege Select Register region 4
93	372	MPUPSR5	MPU Privilege Select Register region 5
94	376	MPUPSR6	MPU Privilege Select Register region 6
95	380	MPUPSR7	MPU Privilege Select Register region 7
96	384	MPUCRA	Unused in this version of AVR32UC
97	388	MPUCRB	Unused in this version of AVR32UC
98	392	MPUBRA	Unused in this version of AVR32UC
99	396	MPUBRB	Unused in this version of AVR32UC
100	400	MPUAPRA	MPU Access Permission Register A
101	404	MPUAPRB	MPU Access Permission Register B
102	408	MPUCR	MPU Control Register
103-191	448-764	Reserved	Reserved for future use
192-255	768-1020	IMPL	IMPLEMENTATION DEFINED

4.5 Exceptions and Interrupts

AVR32UC incorporates a powerful exception handling scheme. The different exception sources, like Illegal Op-code and external interrupt requests, have different priority levels, ensuring a well-defined behavior when multiple exceptions are received simultaneously. Additionally, pending exceptions of a higher priority class may preempt handling of ongoing exceptions of a lower priority class.

When an event occurs, the execution of the instruction stream is halted, and execution control is passed to an event handler at an address specified in Table 4-4 on page 33. Most of the handlers are placed sequentially in the code space starting at the address specified by EVBA, with four bytes between each handler. This gives ample space for a jump instruction to be placed there, jumping to the event routine itself. A few critical handlers have larger spacing between them, allowing the entire event routine to be placed directly at the address specified by the EVBA-relative offset generated by hardware. All external interrupt sources have autovectored interrupt service routine (ISR) addresses. This allows the interrupt controller to directly specify the ISR address as an address relative to EVBA. The autovector offset has 14 address bits, giving an offset of maximum 16384 bytes. The target address of the event handler is calculated as (EVBA | event_handler_offset), not (EVBA + event_handler_offset), so EVBA and exception code segments must be set up appropriately. The same mechanisms are used to service all different types of events, including external interrupt requests, yielding a uniform event handling scheme.

An interrupt controller does the priority handling of the external interrupts and provides the autovector offset to the CPU.

4.5.1 System Stack Issues

Event handling in AVR32UC uses the system stack pointed to by the system stack pointer, SP_SYS, for pushing and popping R8-R12, LR, status register, and return address. Since event code may be timing-critical, SP_SYS should point to memory addresses in the IRAM section, since the timing of accesses to this memory section is both fast and deterministic.

The user must also make sure that the system stack is large enough so that any event is able to push the required registers to stack. If the system stack is full, and an event occurs, the system will enter an UNDEFINED state.

4.5.2 Exceptions and Interrupt Requests

When an event other than *scall* or debug request is received by the core, the following actions are performed atomically:

1. The pending event will not be accepted if it is masked. The I3M, I2M, I1M, I0M, EM, and GM bits in the Status Register are used to mask different events. Not all events can be masked. A few critical events (NMI, Unrecoverable Exception, TLB Multiple Hit, and Bus Error) can not be masked. When an event is accepted, hardware automatically sets the mask bits corresponding to all sources with equal or lower priority. This inhibits acceptance of other events of the same or lower priority, except for the critical events listed above. Software may choose to clear some or all of these bits after saving the necessary state if other priority schemes are desired. It is the event source's responsability to ensure that their events are left pending until accepted by the CPU.
2. When a request is accepted, the Status Register and Program Counter of the current context is stored to the system stack. If the event is an INT0, INT1, INT2, or INT3, registers R8-R12 and LR are also automatically stored to stack. Storing the Status Register ensures that the core is returned to the previous execution mode when the current event handling is completed. When exceptions occur, both the EM and GM bits are set, and the application may manually enable nested exceptions if desired by clearing the appropriate bit. Each exception handler has a dedicated handler address, and this address uniquely identifies the exception source.
3. The Mode bits are set to reflect the priority of the accepted event, and the correct register file bank is selected. The address of the event handler, as shown in Table 4-4, is loaded into the Program Counter.

The execution of the event handler routine then continues from the effective address calculated.

The *rete* instruction signals the end of the event. When encountered, the Return Status Register and Return Address Register are popped from the system stack and restored to the Status Register and Program Counter. If the *rete* instruction returns from INT0, INT1, INT2, or INT3, registers R8-R12 and LR are also popped from the system stack. The restored Status Register contains information allowing the core to resume operation in the previous execution mode. This concludes the event handling.

4.5.3 Supervisor Calls

The AVR32 instruction set provides a supervisor mode call instruction. The *scall* instruction is designed so that privileged routines can be called from any context. This facilitates sharing of code between different execution modes. The *scall* mechanism is designed so that a minimal execution cycle overhead is experienced when performing supervisor routine calls from time-critical event handlers.

The *scall* instruction behaves differently depending on which mode it is called from. The behaviour is detailed in the instruction set reference. In order to allow the *scall* routine to return to the correct context, a return from supervisor call instruction, *rets*, is implemented. In the AVR32UC CPU, *scall* and *rets* uses the system stack to store the return address and the status register.

4.5.4 Debug Requests

The AVR32 architecture defines a dedicated Debug mode. When a debug request is received by the core, Debug mode is entered. Entry into Debug mode can be masked by the DM bit in the

status register. Upon entry into Debug mode, hardware sets the SR[D] bit and jumps to the Debug Exception handler. By default, Debug mode executes in the exception context, but with dedicated Return Address Register and Return Status Register. These dedicated registers remove the need for storing this data to the system stack, thereby improving debuggability. The mode bits in the status register can freely be manipulated in Debug mode, to observe registers in all contexts, while retaining full privileges.

Debug mode is exited by executing the *retd* instruction. This returns to the previous context.

4.5.5 Entry Points for Events

Several different event handler entry points exists. In AVR32UC, the reset address is 0x8000_0000. This places the reset address in the boot flash memory area.

TLB miss exceptions and *scall* have a dedicated space relative to EVBA where their event handler can be placed. This speeds up execution by removing the need for a jump instruction placed at the program address jumped to by the event hardware. All other exceptions have a dedicated event routine entry point located relative to EVBA. The handler routine address identifies the exception source directly.

AVR32UC uses the ITLB and DTLB protection exceptions to signal a MPU protection violation. ITLB and DTLB miss exceptions are used to signal that an access address did not map to any of the entries in the MPU. TLB multiple hit exception indicates that an access address did map to multiple TLB entries, signalling an error.

All external interrupt requests have entry points located at an offset relative to EVBA. This autovector offset is specified by an external Interrupt Controller. The programmer must make sure that none of the autovector offsets interfere with the placement of other code. The autovector offset has 14 address bits, giving an offset of maximum 16384 bytes.

Special considerations should be made when loading EVBA with a pointer. Due to security considerations, the event handlers should be located in non-writeable flash memory, or optionally in a privileged memory protection region if an MPU is present.

If several events occur on the same instruction, they are handled in a prioritized way. The priority ordering is presented in Table 4-4. If events occur on several instructions at different locations in the pipeline, the events on the oldest instruction are always handled before any events on any younger instruction, even if the younger instruction has events of higher priority than the oldest instruction. An instruction B is younger than an instruction A if it was sent down the pipeline later than A.

The addresses and priority of simultaneous events are shown in Table 4-4. Some of the exceptions are unused in AVR32UC since it has no MMU, coprocessor interface, or floating-point unit.

Table 4-4. Priority and Handler Addresses for Events

Priority	Handler Address	Name	Event source	Stored Return Address
1	0x8000_0000	Reset	External input	Undefined
2	Provided by OCD system	OCD Stop CPU	OCD system	First non-completed instruction
3	EVBA+0x00	Unrecoverable exception	Internal	PC of offending instruction
4	EVBA+0x04	TLB multiple hit	MPU	
5	EVBA+0x08	Bus error data fetch	Data bus	First non-completed instruction
6	EVBA+0x0C	Bus error instruction fetch	Data bus	First non-completed instruction
7	EVBA+0x10	NMI	External input	First non-completed instruction
8	Autovectored	Interrupt 3 request	External input	First non-completed instruction
9	Autovectored	Interrupt 2 request	External input	First non-completed instruction
10	Autovectored	Interrupt 1 request	External input	First non-completed instruction
11	Autovectored	Interrupt 0 request	External input	First non-completed instruction
12	EVBA+0x14	Instruction Address	CPU	PC of offending instruction
13	EVBA+0x50	ITLB Miss	MPU	
14	EVBA+0x18	ITLB Protection	MPU	PC of offending instruction
15	EVBA+0x1C	Breakpoint	OCD system	First non-completed instruction
16	EVBA+0x20	Illegal Opcode	Instruction	PC of offending instruction
17	EVBA+0x24	Unimplemented instruction	Instruction	PC of offending instruction
18	EVBA+0x28	Privilege violation	Instruction	PC of offending instruction
19	EVBA+0x2C	Floating-point	UNUSED	
20	EVBA+0x30	Coprocessor absent	Instruction	PC of offending instruction
21	EVBA+0x100	Supervisor call	Instruction	PC(Supervisor Call) +2
22	EVBA+0x34	Data Address (Read)	CPU	PC of offending instruction
23	EVBA+0x38	Data Address (Write)	CPU	PC of offending instruction
24	EVBA+0x60	DTLB Miss (Read)	MPU	
25	EVBA+0x70	DTLB Miss (Write)	MPU	
26	EVBA+0x3C	DTLB Protection (Read)	MPU	PC of offending instruction
27	EVBA+0x40	DTLB Protection (Write)	MPU	PC of offending instruction
28	EVBA+0x44	DTLB Modified	UNUSED	

5. Memories

5.1 Embedded Memories

- **Internal High-Speed Flash**
  - **256KBytes (AT32UC3A3256/S)**
  - **128Kbytes (AT32UC3A3128/S)**
  - **64Kbytes (AT32UC3A364/S)**
    - **0 wait state access at up to 42MHz in worst case conditions**
    - **1 wait state access at up to 84MHz in worst case conditions**
    - **Pipelined Flash architecture, allowing burst reads from sequential Flash locations, hiding penalty of 1 wait state access**
    - **Pipelined Flash architecture typically reduces the cycle penalty of 1 wait state operation to only 15% compared to 0 wait state operation**
    - **100 000 write cycles, 15-year data retention capability**
    - **Sector lock capabilities, Bootloader protection, Security Bit**
    - **32 Fuses, Erased During Chip Erase**
    - **User page for data to be preserved during Chip Erase**
- **Internal High-Speed SRAM**
  - **64KBytes, Single-cycle access at full speed on CPU Local Bus and accessible through the High Speed Bud (HSB) matrix**
  - **2x32KBytes, accessible independently through the High Speed Bud (HSB) matrix**

5.2 Physical Memory Map

The System Bus is implemented as a bus matrix. All system bus addresses are fixed, and they are never remapped in any way, not even in boot.

Note that AVR32 UC CPU uses unsegmented translation, as described in the AVR32UC Technical Architecture Manual.

The 32-bit physical address space is mapped as follows:

Table 5-1. AT32UC3A3A4 Physical Memory Map

Device	Start Address	Size	Size	Size
		AT32UC3A3256S AT32UC3A3256 AT32UC3A4256S AT32UC3A4256	AT32UC3A3128S AT32UC3A3128 AT32UC3A4128S AT32UC3A4128	AT32UC3A364S AT32UC3A364 AT32UC3A464S AT32UC3A464
Embedded CPU SRAM	0x00000000	64KByte	64KByte	64KByte
Embedded Flash	0x80000000	256KByte	128KByte	64KByte
EBI SRAM CS0	0xC0000000	16MByte	16MByte	16MByte
EBI SRAM CS2	0xC8000000	16MByte	16MByte	16MByte
EBI SRAM CS3	0xCC000000	16MByte	16MByte	16MByte
EBI SRAM CS4	0xD8000000	16MByte	16MByte	16MByte
EBI SRAM CS5	0xDC000000	16MByte	16MByte	16MByte
EBI SRAM CS1 /SDRAM CS0	0xD0000000	128MByte	128MByte	128MByte
USB Data	0xE0000000	64KByte	64KByte	64KByte

Table 5-1. AT32UC3A3A4 Physical Memory Map

Device	Start Address	Size AT32UC3A3256S AT32UC3A3256 AT32UC3A4256S AT32UC3A4256	Size AT32UC3A3128S AT32UC3A3128 AT32UC3A4128S AT32UC3A4128	Size AT32UC3A364S AT32UC3A364 AT32UC3A464S AT32UC3A464
HRAMC0	0xFF000000	32KByte	32KByte	32KByte
HRAMC1	0xFF008000	32KByte	32KByte	32KByte
HSB-PB Bridge A	0xFFFF0000	64KByte	64KByte	64KByte
HSB-PB Bridge B	0xFFFE0000	64KByte	64KByte	64KByte

5.3 Peripheral Address Map

Table 5-2. Peripheral Address Mapping

Address		Peripheral Name
0xFF100000	DMACA	DMA Controller - DMACA
0xFFFD0000	AES	Advanced Encryption Standard - AES
0xFFFE0000	USB	USB 2.0 Device and Host Interface - USB
0xFFFE1000	HMATRIX	HSB Matrix - HMATRIX
0xFFFE1400	FLASHC	Flash Controller - FLASHC
0xFFFE1C00	SMC	Static Memory Controller - SMC
0xFFFE2000	SDRAMC	SDRAM Controller - SDRAMC
0xFFFE2400	ECCHRS	Error code corrector Hamming and Reed Solomon - ECCHRS
0xFFFE2800	BUSMON	Bus Monitor module - BUSMON
0xFFFE4000	MCI	Mulitmedia Card Interface - MCI
0xFFFE8000	MSI	Memory Stick Interface - MSI
0xFFFF0000	PDCA	Peripheral DMA Controller - PDCA
0xFFFF0800	INTC	Interrupt controller - INTC

Table 5-2. Peripheral Address Mapping

0xFFFF0C00	PM	Power Manager - PM
0xFFFF0D00	RTC	Real Time Counter - RTC
0xFFFF0D30	WDT	Watchdog Timer - WDT
0xFFFF0D80	EIC	External Interrupt Controller - EIC
0xFFFF1000	GPIO	General Purpose Input/Output Controller - GPIO
0xFFFF1400	USART0	Universal Synchronous/Asynchronous Receiver/Transmitter - USART0
0xFFFF1800	USART1	Universal Synchronous/Asynchronous Receiver/Transmitter - USART1
0xFFFF1C00	USART2	Universal Synchronous/Asynchronous Receiver/Transmitter - USART2
0xFFFF2000	USART3	Universal Synchronous/Asynchronous Receiver/Transmitter - USART3
0xFFFF2400	SPI0	Serial Peripheral Interface - SPI0
0xFFFF2800	SPI1	Serial Peripheral Interface - SPI1
0xFFFF2C00	TWIM0	Two-wire Master Interface - TWIM0
0xFFFF3000	TWIM1	Two-wire Master Interface - TWIM1
0xFFFF3400	SSC	Synchronous Serial Controller - SSC
0xFFFF3800	TC0	Timer/Counter - TC0
0xFFFF3C00	ADC	Analog to Digital Converter - ADC
0xFFFF4000	ABDAC	Audio Bitstream DAC - ABDAC
0xFFFF4400	TC1	Timer/Counter - TC1

Table 5-2. Peripheral Address Mapping

0xFFFF5000	TWIS0	Two-wire Slave Interface - TWIS0
0xFFFF5400	TWIS1	Two-wire Slave Interface - TWIS1

5.4 CPU Local Bus Mapping

Some of the registers in the GPIO module are mapped onto the CPU local bus, in addition to being mapped on the Peripheral Bus. These registers can therefore be reached both by accesses on the Peripheral Bus, and by accesses on the local bus.

Mapping these registers on the local bus allows cycle-deterministic toggling of GPIO pins since the CPU and GPIO are the only modules connected to this bus. Also, since the local bus runs at CPU speed, one write or read operation can be performed per clock cycle to the local bus-mapped GPIO registers.

The following GPIO registers are mapped on the local bus:

Table 5-3. Local Bus Mapped GPIO Registers

Port	Register	Mode	Local Bus Address	Access
0	Output Driver Enable Register (ODER)	WRITE	0x40000040	Write-only
		SET	0x40000044	Write-only
		CLEAR	0x40000048	Write-only
		TOGGLE	0x4000004C	Write-only
	Output Value Register (OVR)	WRITE	0x40000050	Write-only
		SET	0x40000054	Write-only
		CLEAR	0x40000058	Write-only
		TOGGLE	0x4000005C	Write-only
	Pin Value Register (PVR)	-	0x40000060	Read-only
1	Output Driver Enable Register (ODER)	WRITE	0x40000140	Write-only
		SET	0x40000144	Write-only
		CLEAR	0x40000148	Write-only
		TOGGLE	0x4000014C	Write-only
	Output Value Register (OVR)	WRITE	0x40000150	Write-only
		SET	0x40000154	Write-only
		CLEAR	0x40000158	Write-only
		TOGGLE	0x4000015C	Write-only
	Pin Value Register (PVR)	-	0x40000160	Read-only

Table 5-3. Local Bus Mapped GPIO Registers

Port	Register	Mode	Local Bus Address	Access
2	Output Driver Enable Register (ODER)	WRITE	0x40000240	Write-only
		SET	0x40000244	Write-only
		CLEAR	0x40000248	Write-only
		TOGGLE	0x4000024C	Write-only
	Output Value Register (OVR)	WRITE	0x40000250	Write-only
		SET	0x40000254	Write-only
		CLEAR	0x40000258	Write-only
		TOGGLE	0x4000025C	Write-only
	Pin Value Register (PVR)	-	0x40000260	Read-only
3	Output Driver Enable Register (ODER)	WRITE	0x40000340	Write-only
		SET	0x40000344	Write-only
		CLEAR	0x40000348	Write-only
		TOGGLE	0x4000034C	Write-only
	Output Value Register (OVR)	WRITE	0x40000350	Write-only
		SET	0x40000354	Write-only
		CLEAR	0x40000358	Write-only
		TOGGLE	0x4000035C	Write-only
	Pin Value Register (PVR)	-	0x40000360	Read-only

6. Boot Sequence

This chapter summarizes the boot sequence of the AT32UC3A3/A4. The behavior after power-up is controlled by the Power Manager. For specific details, refer to Section 7. ”Power Manager (PM)” on page 86.

6.1 Starting of Clocks

After power-up, the device will be held in a reset state by the Power-On Reset circuitry, until the power has stabilized throughout the device. Once the power has stabilized, the device will use the internal RC Oscillator as clock source.

On system start-up, the PLLs are disabled. All clocks to all modules are running. No clocks have a divided frequency, all parts of the system receives a clock with the same frequency as the internal RC Oscillator.

6.2 Fetching of Initial Instructions

After reset has been released, the AVR32 UC CPU starts fetching instructions from the reset address, which is 0x8000_0000. This address points to the first address in the internal Flash.

The internal Flash uses VDDIO voltage during read and write operations. BOD33 monitors this voltage and maintains the device under reset until VDDIO reaches the minimum voltage, preventing any spurious execution from flash.

The code read from the internal Flash is free to configure the system to use for example the PLLs, to divide the frequency of the clock routed to some of the peripherals, and to gate the clocks to unused peripherals.

When powering up the device, there may be a delay before the voltage has stabilized, depending on the rise time of the supply used. The CPU can start executing code as soon as the supply is above the POR threshold, and before the supply is stable. Before switching to a high-speed clock source, the user should use the BOD to make sure the VDDCORE is above the minimum-level (1.62V).

7. Electrical Characteristics

7.1 Absolute Maximum Ratings*

Operating Temperature ..... -40°C to +85°C

Storage Temperature ..... -60°C to +150°C

Voltage on Input Pin
with respect to Ground .....-0.3V to 3.6V

Maximum Operating Voltage (VDDCORE) 1.95V

Maximum Operating Voltage (VDDIO)..... 3.6V

Total DC Output Current on all I/O Pin
for TQFP144 package ..... 370 mA
for TFBGA144 package ..... 370 mA

*NOTICE: Stresses beyond those listed under “Absolute Maximum Ratings” may cause permanent damage to the device. This is a stress rating only and functional operation of the device at these or other conditions beyond those indicated in the operational sections of this specification is not implied. Exposure to absolute maximum rating conditions for extended periods may affect device reliability.

7.2 DC Characteristics

The following characteristics are applicable to the operating temperature range: T_A = -40°C to 85°C, unless otherwise specified and are certified for a junction temperature up toT_J = 100°C.

Table 7-1. DC Characteristics

Symbol	Parameter	Conditions		Min.	Typ.	Max.	Unit
V_{VDDIO}	DC Supply Peripheral I/Os			3.0		3.6	V
V_{VDDANA}	DC Analog Supply			3.0		3.6	V
V_{IL}	Input Low-level Voltage	All I/O pins except TWCK, TWD, RESET_N, TCK, TDI		-0.3		+0.8	V
		TWCK, TWD		V_{VDDIO} x0.7		V_{VDDIO} +0.5	V
		RESET_N, TCK, TDI		+0.8V			V
V_{IH}	Input High-level Voltage	All I/O pins except TWCK, TWD		2.0		3.6	V
		TWCK, TWD					V
V_{OL}	Output Low-level Voltage	I_{OL} = -2mA for Pin drive x1 I_{OL} = -4mA for Pin drive x2 I_{OL} = -8mA for Pin drive x3				0.4	V
V_{OH}	Output High-level Voltage	I_{OH} = 2mA for Pin drive x1 I_{OH} = 4mA for Pin drive x2 I_{OH} = 8mA for Pin drive x3		V_{VDDIO} -0.4			V
I_{LEAK}	Input Leakage Current	Pullup resistors disabled			0.05	1	µA
C_{IN}	Input Capacitance				7		pF
R_{PULLUP}	Pull-up Resistance	All I/O pins except RESET_N, TCK, TDI, TMS		9	15	25	KΩ
		RESET_N, TCK, TDI, TMS		5		25	KΩ
I_O	Output Current Pin drive 1x Pin drive 2x Pin drive 3x					2.0 4.0 8.0	mA
I_{SC}	Static Current	On V_{VDDIN} = 3.3V, CPU in static mode	T_A = 25°C		30		µA
			T_A = 85°C		175		µA

7.2.1 I/O Pin Output Level Typical Characteristics

Figure 7-1. I/O Pin drive x2 Output Low Level Voltage (VOL) vs. Source Current

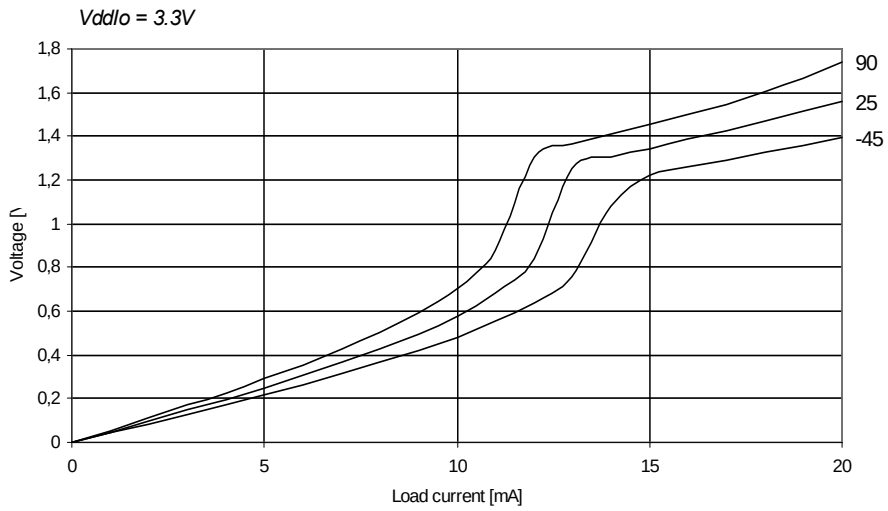

Figure 7-2. I/O Pin drive x2 Output High Level Voltage (VOH) vs. Source Current

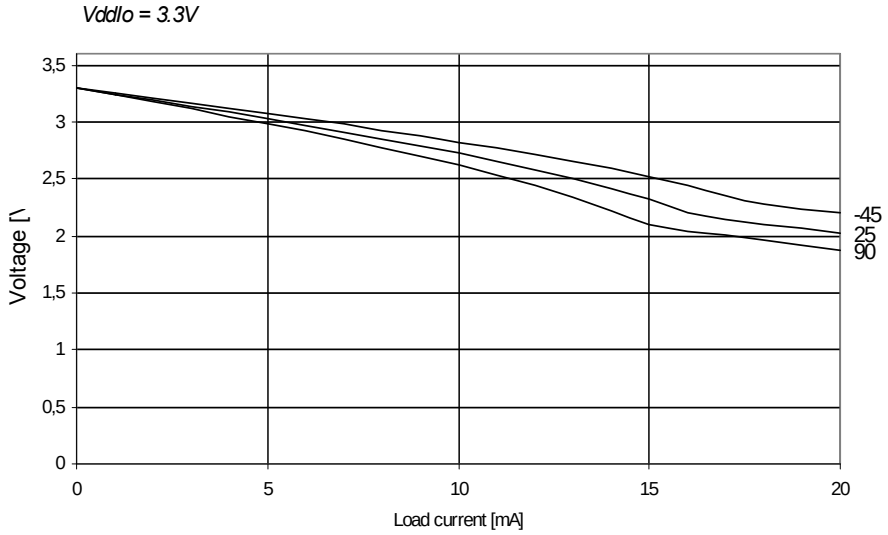

7.3 I/O pin Characteristics

These parameters are given in the following conditions:

- V_{DDCORE} = 1.8V
- V_{DDIO} = 3.3V
- Ambient Temperature = 25°C

Table 7-2. Normal I/O Pin Characteristics

Symbol	Parameter	Conditions	drive x2	drive x2	drive x3	Unit
f_{MAX}	Output frequency	10pf	40	66	100	MHz
		30pf	18.2	35.7	61.6	MHz
		60pf	7.5	18.5	36.3	MHz
t_{RISE}	Rise time	10pf	2.7	1.4	0.9	ns
		30pf	6.9	3.5	1.9	ns
		60pf	13.4	6.7	3.5	ns
t_{FALL}	Fall time	10pf	3.2	1.7	0.9	ns
		30pf	8.6	4.3	2.26	ns
		60pf	16.5	8.3	4.3	ns

7.4 Regulator characteristics

Table 7-3. Electrical Characteristics

Symbol	Parameter	Conditions	Min.	Typ.	Max.	Unit
V_{VDDIN}	Supply voltage (input)		3.0	3.3	3.6	V
$V_{VDDCORE}$	Supply voltage (output)		1.75	1.85	1.95	V
I_{OUT}	Maximum DC output current	V_{VDDIN} = 3.3V			100	mA

Table 7-4. Decoupling Requirements

Symbol	Parameter	Conditions	Typ.	Technology	Unit
C_{IN1}	Input Regulator Capacitor 1		1	NPO	nF
C_{IN2}	Input Regulator Capacitor 2		4.7	X7R	µF
C_{OUT1}	Output Regulator Capacitor 1		470	NPO	pF
C_{OUT2}	Output Regulator Capacitor 2		2.2	X7R	µF

7.5 Analog characteristics

7.5.1 ADC

Table 7-5. Electrical Characteristics

Symbol	Parameter	Conditions	Min.	Typ.	Max.	Unit
V_{VDDANA}	Analog Power Supply		3.0		3.6	V

Table 7-6. Decoupling Requirements

Symbol	Parameter	Conditions	Typ.	Technology	Unit
C_{VDDANA}	Power Supply Capacitor		100	NPO	nF

7.5.2 BOD

Table 7-7. 1.8V BOD Level Values

Symbol	Parameter Value	Conditions	Min.	Typ.	Max.	Unit
BODLEVEL	00 1111b			1.79		V
	01 0111b			1.70		V
	01 1111b			1.61		V
	10 0111b			1.52		V

Table 7-7 describes the values of the BODLEVEL field in the flash FGPFR register.

Table 7-8. 3.3V BOD Level Values

Symbol	Parameter Value	Conditions	Min.	Typ.	Max.	Unit
BOD33LEVEL	Reset value			2.71		V
	1011			2.27		V
	1010			2.37		V
	1001			2.46		V
	1000			2.56		V
	0111			2.66		V
	0110			2.76		V
	0101			2.86		V
	0100			2.96		V
	0011			3.06		V
	0010			3.15		V
	0001			3.25		V
	0000			3.35		V

Table 7-8 describes the values of the BOD33.LEVEL field in the PM module

Table 7-9. BOD Timing

Symbol	Parameter	Conditions	Min.	Typ.	Max.	Unit
T_{BOD}	Minimum time with VDDCORE < VBOD to detect power failure	Falling VDDCORE from 1.8V to 1.1V		300	800	ns

7.5.3 Reset Sequence

Table 7-10. Electrical Characteristics

Symbol	Parameter	Conditions	Min.	Typ.	Max.	Unit
V_{DDRR}	VDDIN/VDDIO rise rate to ensure power-on-reset		0.8			V/ms
V_{POR+}	Rising threshold voltage: voltage up to which device is kept under reset by POR on rising VDDIN	Rising VDDIN: $V_{RESTART}$ -> V_{POR+}		2.7		V
V_{POR-}	Falling threshold voltage: voltage when POR resets device on falling VDDIN	Falling VDDIN: 3.3V -> V_{POR-}		2.7		V
$V_{RESTART}$	On falling VDDIN, voltage must go down to this value before supply can rise again to ensure reset signal is released at V_{POR+}	Falling VDDIN: 3.3V -> $V_{RESTART}$			0.2	V
T_{SSU1}	Time for Cold System Startup: Time for CPU to fetch its first instruction (RCosc not calibrated)		480		960	µs
T_{SSU2}	Time for Hot System Startup: Time for CPU to fetch its first instruction (RCosc calibrated)			420		µs

Figure 7-3. MCU Cold Start-Up

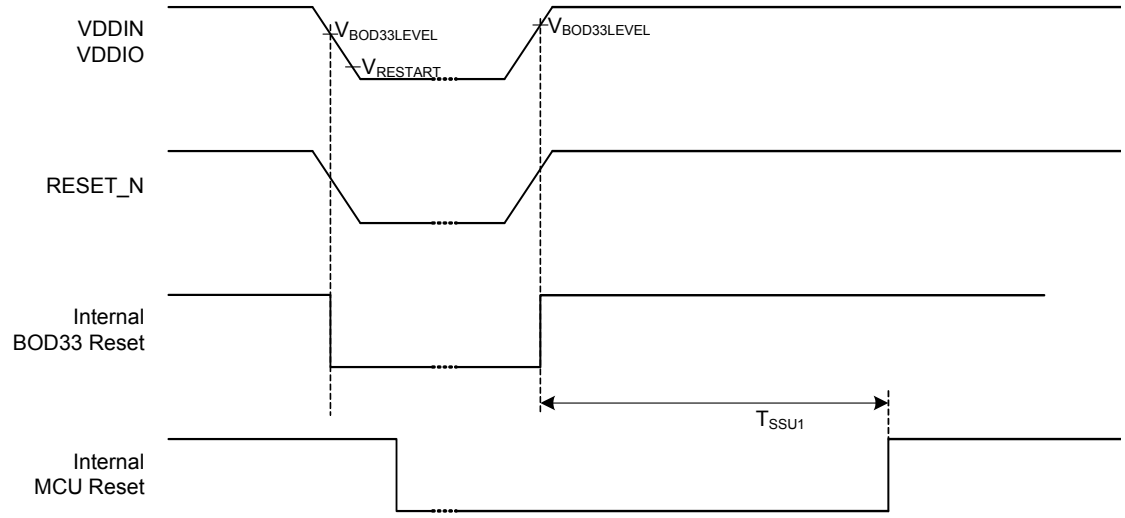

Figure 7-4. MCU Cold Start-Up RESET_N Externally Driven

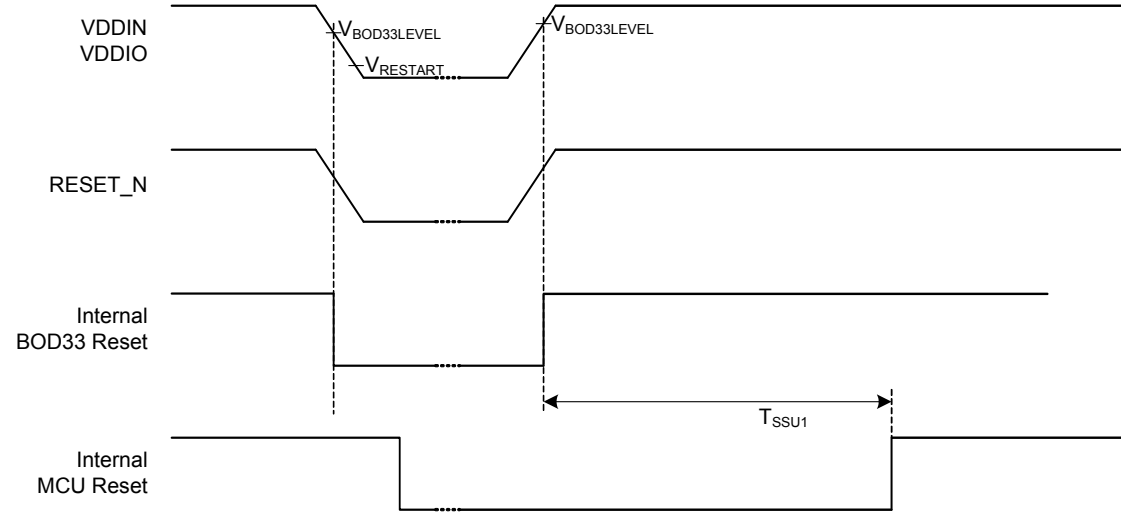

Figure 7-5. MCU Hot Start-Up

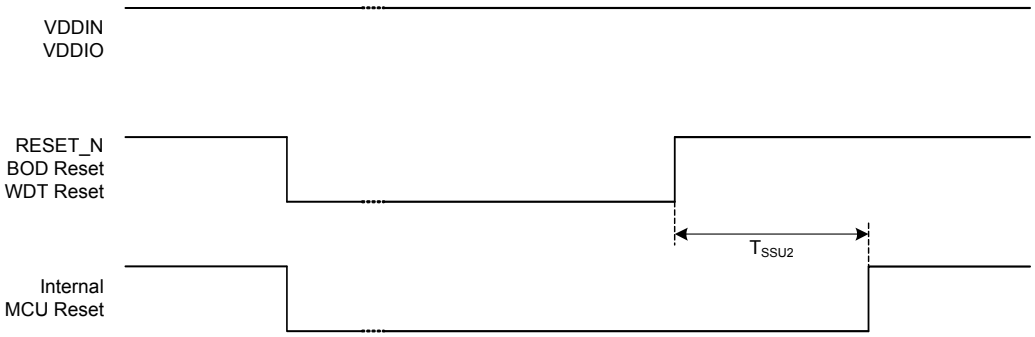

7.5.4 RESET_N Characteristics

Table 7-11. RESET_N Waveform Parameters

Symbol	Parameter	Conditions	Min.	Typ.	Max.	Unit
t_{RESET}	RESET_N minimum pulse width		10			ns

7.6 Power Consumption

The values in Table 7-12 and Table 7-13 on page 50 are measured values of power consumption with operating conditions as follows:

- V_{DDIO} = 3.3V
- T_A = 25°C
- I/Os are configured in input, pull-up enabled.

Figure 7-6. Measurement Setup

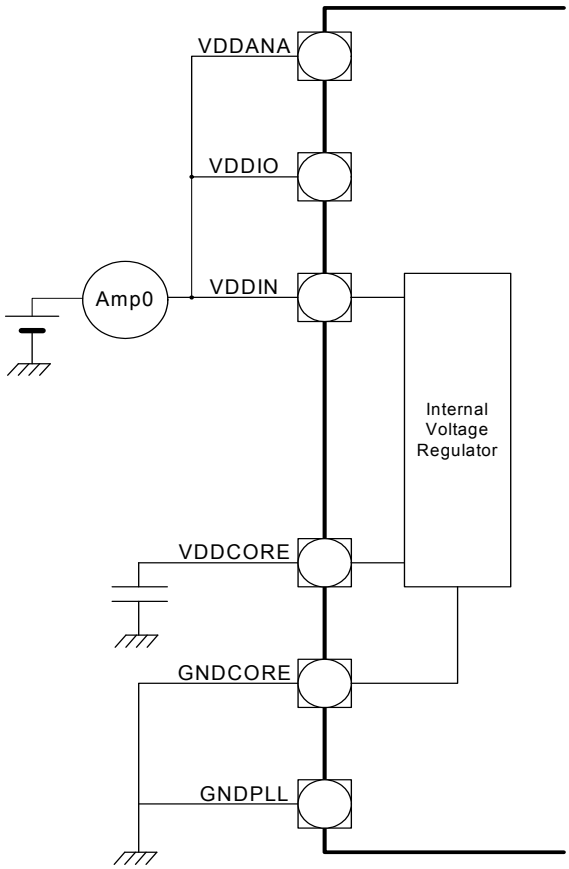

These figures represent the power consumption measured on the power supplies

7.6.1 Power Consumtion for Different Sleep Modes

Table 7-12. Power Consumption for Different Sleep Modes

Mode	Conditions[1]		Typ.	Unit
Active	- CPU running a recursive Fibonacci Algorithm from flash and clocked from PLL0 at f MHz. - Flash High Speed mode disable (f < 66 MHz) - Voltage regulator is on. - XIN0: external clock. Xin1 Stopped. XIN32 stopped. - All peripheral clocks activated with a division by 8. - GPIOs are inactive with internal pull-up, JTAG unconnected with external pullup and Input pins are connected to GND		0.626xf(MHz)+2.257	mA/MHz
	Same conditions with Flash High Speed mode enable (66< f < 84 MHz)		0.670xf(MHz)+2.257	mA/MHz
	Same conditions with Flash High Speed mode disable at 60 MHz		40	mA
Idle	See Active mode conditions		0.349xf(MHz)+0.968	mA/MHz
	Same conditions at 60 MHz		21.8	mA
Frozen	See Active mode conditions		0.098xf(MHz)+1.012	mA/MHz
	Same conditions at 60 MHz		6.6	mA
Standby	See Active mode conditions		0.066xf(MHz)+1.010	mA/MHz
	Same conditions at 60 MHz		4.6	mA
Stop	- CPU running in sleep mode - XIN0, Xin1 and XIN32 are stopped. - All peripheral clocks are desactived. - GPIOs are inactive with internal pull-up, JTAG unconnected with external pullup and Input pins are connected to GND.		96	µA
Deepstop	See Stop mode conditions		54	µA
Static	T_A = 25 °C CPU is in static mode GPIOs on internal pull-up All peripheral clocks de-activated DM and DP pins connected to ground XIN0, Xin1 and XIN32 are stopped	on Amp0	31	µA

Notes: 1. Core frequency is generated from XIN0 using the PLL.

Table 7-13. Typical Cuurent Consumption by Peripheral

Peripheral	Typ.	Unit
ADC	7	µA/MHz
AES	80	
ABDAC	10	
DMACA	70	
EBI	23	
EIC	0.5	
GPIO	37	
INTC	3	
MCI	40	
MSI	10	
PDCA	20	
SDRAM	5	
SMC	9	
SPI	6	
SSC	10	
RTC	5	
TC	8	
TWIM	2	
TWIS	2	
USART	10	
USBB	90	
WDT	2	

7.7 System Clock Characteristics

These parameters are given in the following conditions:

- V_{DDCORE} = 1.8V

7.7.1 CPU/HSB Clock Characteristics

Table 7-14. Core Clock Waveform Parameters

Symbol	Parameter	Conditions	Min.	Typ.	Max.	Unit
$1/(t_{CPCPU})$	CPU Clock Frequency	-40°C < Ambient Temperature < 70°C			84	MHz
$1/(t_{CPCPU})$	CPU Clock Frequency	-40°C < Ambient Temperature < 85°C			66	MHz

7.7.2 PBA Clock Characteristics

Table 7-15. PBA Clock Waveform Parameters

Symbol	Parameter	Conditions	Min.	Typ.	Max.	Unit
$1/(t_{CPPBA})$	PBA Clock Frequency	-40°C < Ambient Temperature < 70°C			84	MHz
$1/(t_{CPPBA})$	PBA Clock Frequency	-40°C < Ambient Temperature < 85°C			66	MHz

7.7.3 PBB Clock Characteristics

Table 7-16. PBB Clock Waveform Parameters

Symbol	Parameter	Conditions	Min.	Typ.	Max.	Unit
$1/(t_{CPPBB})$	PBB Clock Frequency	-40°C < Ambient Temperature < 70°C			84	MHz
$1/(t_{CPPBB})$	PBB Clock Frequency	-40°C < Ambient Temperature < 85°C			66	MHz

7.8 Oscillator Characteristics

The following characteristics are applicable to the operating temperature range: T_A = -40°C to 85°C and worst case of power supply, unless otherwise specified.

7.8.1 Slow Clock RC Oscillator

Table 7-17. RC Oscillator Frequency

Symbol	Parameter	Conditions	Min.	Typ.	Max.	Unit
F_{RC}	RC Oscillator Frequency	Calibration point: T_A = 85°C		115.2	116	KHz
		T_A = 25°C		112		KHz
		T_A = -40°C	105	108		KHz

7.8.2 32 KHz Oscillator

Table 7-18. 32 KHz Oscillator Characteristics

Symbol	Parameter	Conditions	Min.	Typ.	Max.	Unit
$1/(t_{CP32KHz})$	Oscillator Frequency	External clock on XIN32			30	MHz
		Crystal		32 768		Hz
C_L	Equivalent Load Capacitance		6		12.5	pF
ESR	Crystal Equivalent Series Resistance				100	KΩ
t_{ST}	Startup Time	C_L = 6pF(1) C_L = 12.5pF(1)			600 1200	ms
t_{CH}	XIN32 Clock High Half-period		0.4 t_{CP}		0.6 t_{CP}	
t_{CL}	XIN32 Clock Low Half-period		0.4 t_{CP}		0.6 t_{CP}	
C_{IN}	XIN32 Input Capacitance				5	pF
I_{OSC}	Current Consumption	Active mode			1.8	µA
		Standby mode			0.1	µA

Note: 1. C_L is the equivalent load capacitance.

7.8.3 Main Oscillators

Table 7-19. Main Oscillators Characteristics

Symbol	Parameter	Conditions	Min.	Typ.	Max.	Unit
$1/(t_{CPMAIN})$	Oscillator Frequency	External clock on XIN			50	MHz
		Crystal	0.4		20	MHz
C_{L1}, C_{L2}	Internal Load Capacitance ($C_{L1} = C_{L2}$)			7		pF
ESR	Crystal Equivalent Series Resistance				75	Ω
	Duty Cycle		40	50	60	%
t_{ST}	Startup Time	f = 400 KHz f = 8 MHz f = 16 MHz f = 20 MHz		25 4 1.4 1		ms
t_{CH}	XIN Clock High Half-period		0.4 t_{CP}		0.6 t_{CP}	
t_{CL}	XIN Clock Low Half-period		0.4 t_{CP}		0.6 t_{CP}	
C_{IN}	XIN Input Capacitance			7		pF
I_{OSC}	Current Consumption	Active mode at 400 KHz. Gain = G0 Active mode at 8 MHz. Gain = G1 Active mode at 16 MHz. Gain = G2 Active mode at 20 MHz. Gain = G3		30 45 95 205		µA

7.8.4 Phase Lock Loop (PLL0, PLL1)

Table 7-20. PLL Characteristics

Symbol	Parameter	Conditions	Min.	Typ.	Max.	Unit
F_{OUT}	VCO Output Frequency		80		240	MHz
F_{IN}	Input Frequency (after input divider)		4		16	MHz
I_{PLL}	Current Consumption	Active mode (Fout=80 MHz)		250		µA
		Active mode (Fout=240 MHz)		600		µA

7.8.5 USB Hi-Speed Phase Lock Loop

Table 7-21. PLL Characteristics

Symbol	Parameter	Conditions	Min.	Typ.	Max.	Unit
F_{OUT}	VCO Output Frequency			480		MHz
F_{IN}	Input Frequency			12		MHz
Delta F_{IN}	Input Frequency Accuracy (applicable to Clock signal on XIN or to Quartz tolerance)		-500		+500	ppm
I_{PLL}	Current Consumption	Active mode @480MHz @1.8V		2.5		mA

7.9 ADC Characteristics

Table 7-22. Channel Conversion Time and ADC Clock

Parameter	Conditions	Min.	Typ.	Max.	Unit
ADC Clock Frequency	10-bit resolution mode			5	MHz
	8-bit resolution mode			8	MHz
Startup Time	Return from Idle Mode			20	µs
Track and Hold Acquisition Time		600			ns
Conversion Time	ADC Clock = 5 MHz			2	µs
	ADC Clock = 8 MHz			1.25	µs
Throughput Rate	ADC Clock = 5 MHz			384 (1)	kSPS
	ADC Clock = 8 MHz			533 (2)	kSPS

1. Corresponds to 13 clock cycles: 3 clock cycles for track and hold acquisition time and 10 clock cycles for conversion.
2. Corresponds to 15 clock cycles: 5 clock cycles for track and hold acquisition time and 10 clock cycles for conversion.

Table 7-23. ADC Power Consumption

Parameter	Conditions	Min.	Typ.	Max.	Unit
Current Consumption on VDDANA (1)	On 13 samples with ADC clock = 5 MHz			1.25	mA

1. Including internal reference input current

Table 7-24. Analog Inputs

Parameter	Conditions	Min.	Typ.	Max.	Unit
Input Voltage Range		0		VDDANA	V
Input Leakage Current				1	µA
Input Capacitance			7		pF
Input Resistance			350	850	Ohm

Table 7-25. Transfer Characteristics in 8-bit mode

Parameter	Conditions	Min.	Typ.	Max.	Unit
Resolution			8		Bit
Absolute Accuracy	ADC Clock = 5 MHz			0.8	LSB
	ADC Clock = 8 MHz			1.5	LSB
Integral Non-linearity	ADC Clock = 5 MHz		0.35	0.5	LSB
	ADC Clock = 8 MHz		0.5	1.5	LSB
Differential Non-linearity	ADC Clock = 5 MHz		0.3	0.5	LSB
	ADC Clock = 8 MHz		0.5	1.5	LSB
Offset Error	ADC Clock = 5 MHz	-1.5		1.5	LSB
Gain Error	ADC Clock = 5 MHz	-0.5		0.5	LSB

Table 7-26. Transfer Characteristics in 10-bit mode

Parameter	Conditions	Min.	Typ.	Max.	Unit
Resolution			10		Bit
Absolute Accuracy	ADC Clock = 5 MHz			3	LSB
Integral Non-linearity	ADC Clock = 5 MHz		1.5	2	LSB
Differential Non-linearity	ADC Clock = 5 MHz		1	2	LSB
	ADC Clock = 2.5 MHz		0.6	1	LSB
Offset Error	ADC Clock = 5 MHz	-2		2	LSB
Gain Error	ADC Clock = 5 MHz	-2		2	LSB

7.10 USB Transceiver Characteristics

7.10.1 Electrical Characteristics

Table 7-27. Electrical Parameters

Symbol	Parameter	Conditions	Min.	Typ.	Max.	Unit
R_{EXT}	Recommended External USB Series Resistor	In series with each USB pin with ±5%		39		Ω
R_{BIAS}	VBIAS External Resistor (1)	±1%		6810		Ω
C_{BIAS}	VBIAS External Capcitor			10		pF

1. The USB on-chip buffers comply with the Universal Serial Bus (USB) v2.0 standard. All AC parameters related to these buffers can be found within the USB 2.0 electrical specifications.

7.10.2 Static Power Consumption

Table 7-28. Static Power Consumption

Symbol	Parameter	Conditions	Min.	Typ.	Max.	Unit
I_{BIAS}	Bias current consumption on VBG				1	µA
$I_{VDDUTMI}$	HS Transceiver and I/O current consumption				8	µA
	FS/HS Transceiver and I/O current consumption	If cable is connected, add 200µA (typical) due to Pull-up/Pull-down current consumption			3	µA

7.10.3 Dynamic Power Consumption

Table 7-29. Dynamic Power Consumption

Symbol	Parameter	Conditions	Min.	Typ.	Max.	Unit
I_{BIAS}	Bias current consumption on VBG			0.7	0.8	mA

Table 7-29. Dynamic Power Consumption

Symbol	Parameter	Conditions	Min.	Typ.	Max.	Unit
$I_{VDDUTMI}$	HS Transceiver current consumption	HS transmission		47	60	mA
	HS Transceiver current consumption	HS reception		18	27	mA
	FS/HS Transceiver current consumption	FS transmission 0m cable [(1)]		4	6	mA
	FS/HS Transceiver current consumption	FS transmission 5m cable		26	30	mA
	FS/HS Transceiver current consumption	FS reception		3	4.5	mA

1. Including 1 mA due to Pull-up/Pull-down current consumption.

34.5.5 USB High Speed Design Guidelines

In order to facilitate hardware design, Atmel provides an application note on www.atmel.com.

7.11 EBI Timings

7.11.1 SMC Signals

These timings are given for worst case process, T = 85·C, VDDIO = 3V and 40 pF load capacitance.

Table 7-30. SMC Clock Signal

Symbol	Parameter	Max.[1]	Unit
$1/(t_{CPSMC})$	SMC Controller Clock Frequency	$1/(t_{cpcpu})$	MHz

Note: 1. The maximum frequency of the SMC interface is the same as the max frequency for the HSB.

Table 7-31. SMC Read Signals with Hold Settings

Symbol	Parameter	Min.	Unit
NRD Controlled (READ_MODE = 1)			
SMC_1	Data Setup before NRD High	12	ns
SMC_2	Data Hold after NRD High	0	ns
SMC_3	NRD High to NBS0/A0 Change[1]	nrd hold length * t_{CPSMC} - 1.3	ns
SMC_4	NRD High to NBS1 Change[1]	nrd hold length * t_{CPSMC} - 1.3	ns
SMC_5	NRD High to NBS2/A1 Change[1]	nrd hold length * t_{CPSMC} - 1.3	ns
SMC_7	NRD High to A2 - A23 Change[1]	nrd hold length * t_{CPSMC} - 1.3	ns
SMC_8	NRD High to NCS Inactive[1]	(nrd hold length - ncs rd hold length) * t_{CPSMC} - 2.3	ns
SMC_9	NRD Pulse Width	nrd pulse length * t_{CPSMC} - 1.4	ns
NRD Controlled (READ_MODE = 0)			
SMC_{10}	Data Setup before NCS High	11.5	ns
SMC_{11}	Data Hold after NCS High	0	ns
SMC_{12}	NCS High to NBS0/A0 Change[1]	ncs rd hold length * t_{CPSMC} - 2.3	ns
SMC_{13}	NCS High to NBS0/A0 Change[1]	ncs rd hold length * t_{CPSMC} - 2.3	ns
SMC_{14}	NCS High to NBS2/A1 Change[1]	ncs rd hold length * t_{CPSMC} - 2.3	ns
SMC_{16}	NCS High to A2 - A23 Change[1]	ncs rd hold length * t_{CPSMC} - 4	ns
SMC_{17}	NCS High to NRD Inactive[1]	ncs rd hold length - nrd hold length)* t_{CPSMC} - 1.3	ns
SMC_{18}	NCS Pulse Width	ncs rd pulse length * t_{CPSMC} - 3.6	ns

Note: 1. hold length = total cycle duration - setup duration - pulse duration. “hold length” is for “ncs rd hold length” or “nrd hold length”.

Table 7-32. SMC Read Signals with no Hold Settings

Symbol	Parameter	Min.	Unit
NRD Controlled (READ_MODE = 1)			
SMC_{19}	Data Setup before NRD High	13.7	ns
SMC_{20}	Data Hold after NRD High	1	ns
NRD Controlled (READ_MODE = 0)			
SMC_{21}	Data Setup before NCS High	13.3	ns
SMC_{22}	Data Hold after NCS High	0	ns

Table 7-33. SMC Write Signals with Hold Settings

Symbol	Parameter	Min.	Unit
NRD Controlled (READ_MODE = 1)			
SMC_{23}	Data Out Valid before NWE High	(nwe pulse length - 1) * t_{CPSMC} - 0.9	ns
SMC_{24}	Data Out Valid after NWE High(1)	nwe hold length * t_{CPSMC} - 6	ns
SMC_{25}	NWE High to NBS0/A0 Change(1)	nwe hold length * t_{CPSMC} - 1.9	ns
SMC_{26}	NWE High to NBS1 Change(1)	nwe hold length * t_{CPSMC} - 1.9	ns
SMC_{29}	NWE High to A1 Change(1)	nwe hold length * t_{CPSMC} - 1.9	ns
SMC_{31}	NWE High to A2 - A23 Change(1)	nwe hold length * t_{CPSMC} - 1.7	ns
SMC_{32}	NWE High to NCS Inactive(1)	(nwe hold length - ncs wr hold length)* t_{CPSMC} - 2.9	ns
SMC_{33}	NWE Pulse Width	nwe pulse length * t_{CPSMC} - 0.9	ns
NRD Controlled (READ_MODE = 0)			
SMC_{34}	Data Out Valid before NCS High	(ncs wr pulse length - 1)* t_{CPSMC} - 4.6	ns
SMC_{35}	Data Out Valid after NCS High(1)	ncs wr hold length * t_{CPSMC} - 5.8	ns
SMC_{36}	NCS High to NWE Inactive(1)	(ncs wr hold length - nwe hold length)* t_{CPSMC} - 0.6	ns

Note: 1. hold length = total cycle duration - setup duration - pulse duration. “hold length” is for “ncs wr hold length” or “nwe hold length"

Table 7-34. SMC Write Signals with No Hold Settings (NWE Controlled only)

Symbol	Parameter	Min.	Unit
SMC_{37}	NWE Rising to A2-A25 Valid	5.4	ns
SMC_{38}	NWE Rising to NBS0/A0 Valid	5	ns
SMC_{39}	NWE Rising to NBS1 Change	5	ns
SMC_{40}	NWE Rising to A1/NBS2 Change	5	ns
SMC_{41}	NWE Rising to NBS3 Change	5	ns
SMC_{42}	NWE Rising to NCS Rising	5.1	ns

Table 7-34. SMC Write Signals with No Hold Settings (NWE Controlled only)

Symbol	Parameter	Min.	Unit
SMC_{43}	Data Out Valid before NWE Rising	(nwe pulse length - 1) * t_{CPSMC} - 1.2	ns
SMC_{44}	Data Out Valid after NWE Rising	5	ns
SMC_{45}	NWE Pulse Width	nwe pulse length * t_{CPSMC} - 0.9	ns

Figure 7-7. SMC Signals for NCS Controlled Accesses.

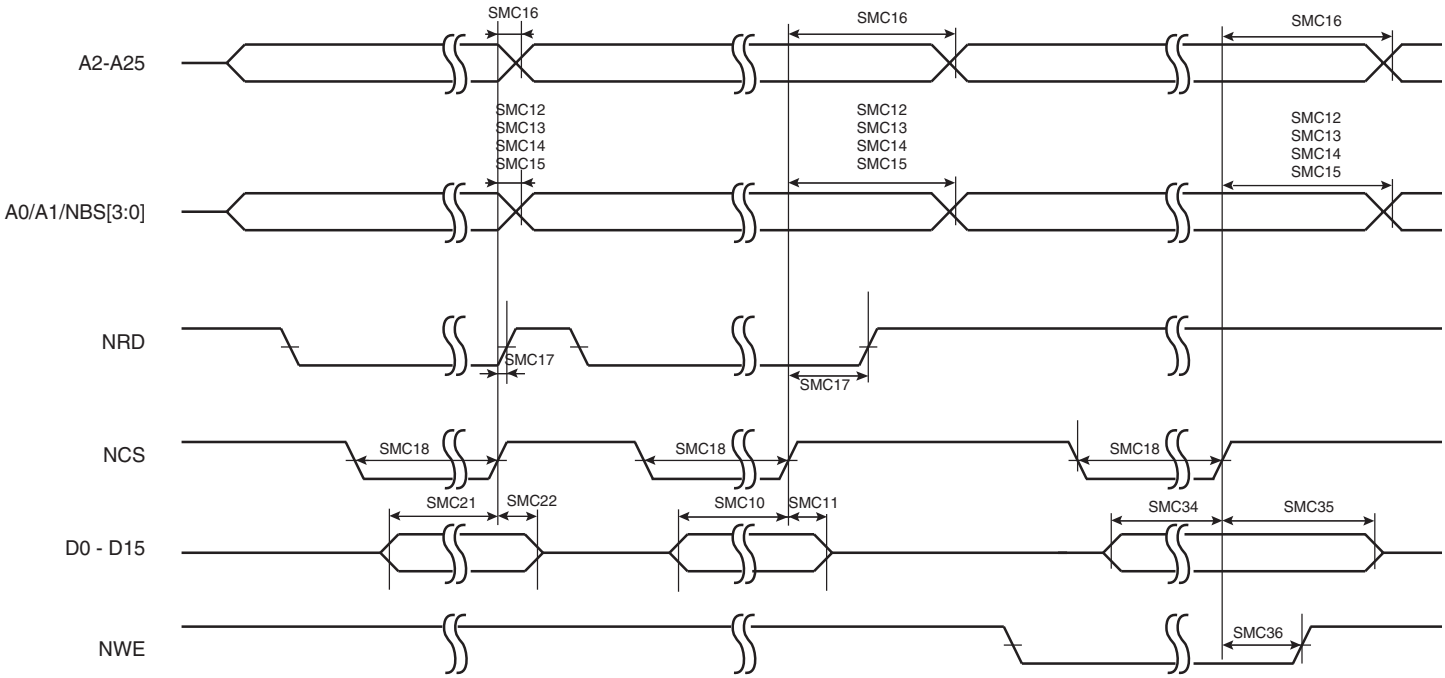

Figure 7-8. SMC Signals for NRD and NRW Controlled Accesses.

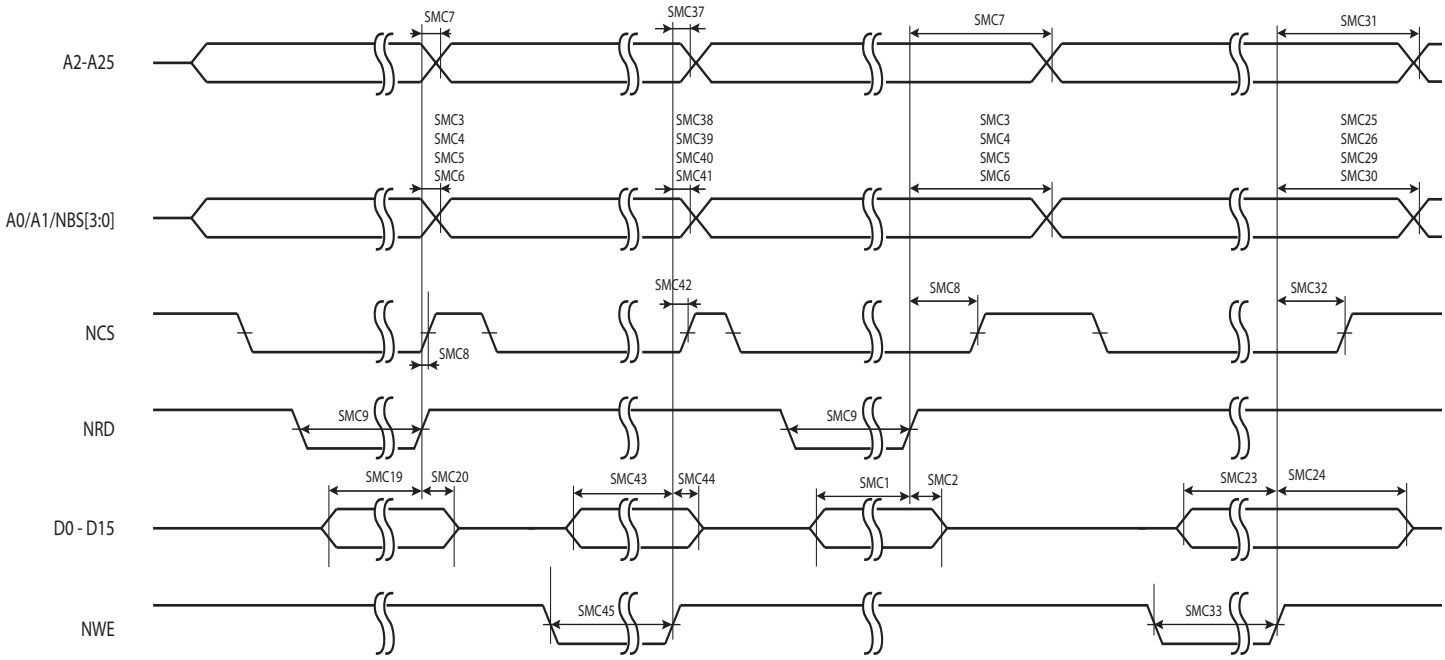

7.11.2 SDRAM Signals

These timings are given for 10 pF load on SDCK and 40 pF on other signals.

Table 7-35. SDRAM Clock Signal.

Symbol	Parameter	Conditions	Min.	Max.[1]	Unit
$1/(t_{CPSDCK})$	SDRAM Controller Clock Frequency			$1/(t_{cpcpu})$	MHz

Note: 1. The maximum frequency of the SDRAMC interface is the same as the max frequency for the HSB.

Table 7-36. SDRAM Clock Signal

Symbol	Parameter	Conditions	Min.	Max.	Unit
$SDRAMC_1$	SDCKE High before SDCK Rising Edge		7.4		ns
$SDRAMC_2$	SDCKE Low after SDCK Rising Edge		3.2		ns
$SDRAMC_3$	SDCKE Low before SDCK Rising Edge		7		ns
$SDRAMC_4$	SDCKE High after SDCK Rising Edge		2.9		ns
$SDRAMC_5$	SDCS Low before SDCK Rising Edge		7.5		ns
$SDRAMC_6$	SDCS High after SDCK Rising Edge		1.6		ns
$SDRAMC_7$	RAS Low before SDCK Rising Edge		7.2		ns
$SDRAMC_8$	RAS High after SDCK Rising Edge		2.3		ns
$SDRAMC_9$	SDA10 Change before SDCK Rising Edge		7.6		ns
$SDRAMC_{10}$	SDA10 Change after SDCK Rising Edge		1.9		ns
$SDRAMC_{11}$	Address Change before SDCK Rising Edge		6.2		ns
$SDRAMC_{12}$	Address Change after SDCK Rising Edge		2.2		ns

Table 7-36. SDRAM Clock Signal

Symbol	Parameter	Conditions	Min.	Max.	Unit
$SDRAMC_{13}$	Bank Change before SDCK Rising Edge		6.3		ns
$SDRAMC_{14}$	Bank Change after SDCK Rising Edge		2.4		ns
$SDRAMC_{15}$	CAS Low before SDCK Rising Edge		7.4		ns
$SDRAMC_{16}$	CAS High after SDCK Rising Edge		1.9		ns
$SDRAMC_{17}$	DQM Change before SDCK Rising Edge		6.4		ns
$SDRAMC_{18}$	DQM Change after SDCK Rising Edge		2.2		ns
$SDRAMC_{19}$	D0-D15 in Setup before SDCK Rising Edge		9		ns
$SDRAMC_{20}$	D0-D15 in Hold after SDCK Rising Edge		0		ns
$SDRAMC_{23}$	SDWE Low before SDCK Rising Edge		7.6		ns
$SDRAMC_{24}$	SDWE High after SDCK Rising Edge		1.8		ns
$SDRAMC_{25}$	D0-D15 Out Valid before SDCK Rising Edge		7.1		ns
$SDRAMC_{26}$	D0-D15 Out Valid after SDCK Rising Edge		1.5		ns

Figure 7-9. SDRAMC Signals relative to SDCK.

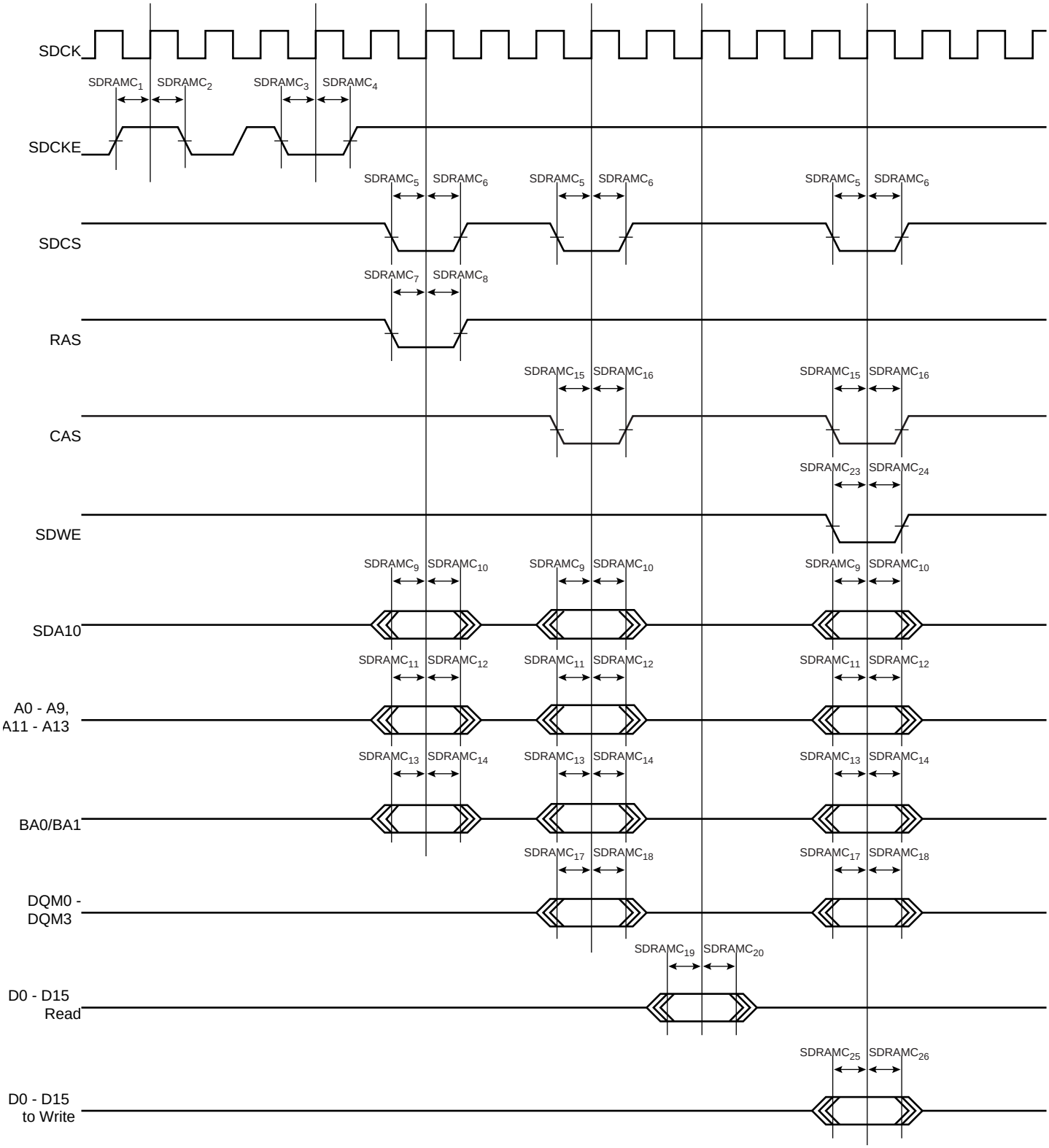

7.12 JTAG Characteristics

7.12.1 JTAG Interface Signals

Table 7-37. JTAG Interface Timing Specification

Symbol	Parameter	Conditions [1]	Min.	Max.	Unit
$JTAG_0$	TCK Low Half-period		6		ns
$JTAG_1$	TCK High Half-period		3		ns
$JTAG_2$	TCK Period		9		ns
$JTAG_3$	TDI, TMS Setup before TCK High		1		ns
$JTAG_4$	TDI, TMS Hold after TCK High		0		ns
$JTAG_5$	TDO Hold Time		4		ns
$JTAG_6$	TCK Low to TDO Valid			6	ns
$JTAG_7$	Device Inputs Setup Time				ns
$JTAG_8$	Device Inputs Hold Time				ns
$JTAG_9$	Device Outputs Hold Time				ns
$JTAG_{10}$	TCK to Device Outputs Valid				ns

1. V_{VDDIO} from 3.0V to 3.6V, maximum external capacitor = 40pF

Figure 7-10. JTAG Interface Signals

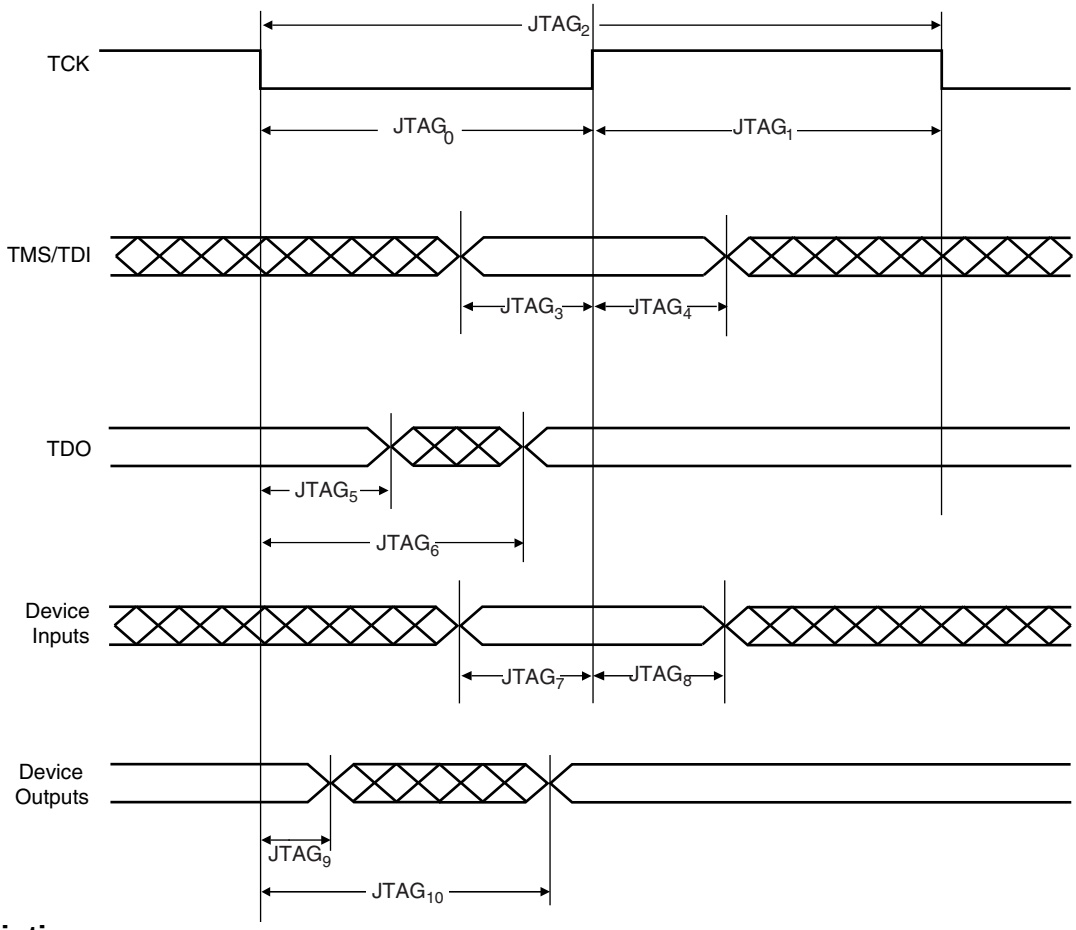

7.13 SPI Characteristics

Figure 7-11. SPI Master mode with (CPOL= NCPHA= 0) or (CPOL= NCPHA= 1)

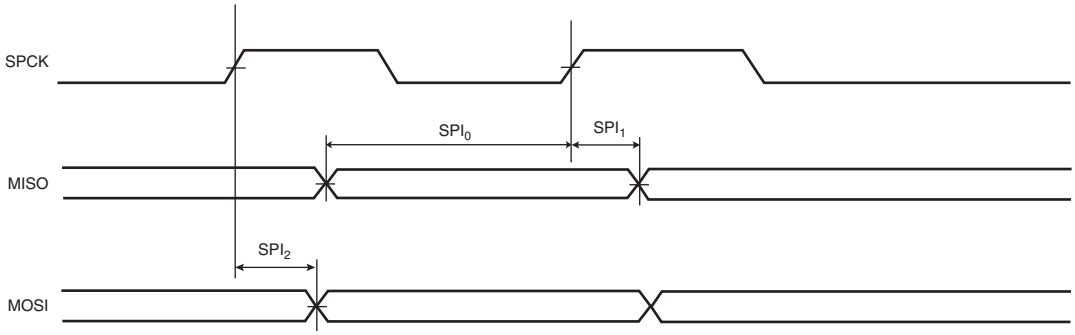

Figure 7-12. SPI Master mode with (CPOL= 0 and NCPHA= 1) or (CPOL= 1 and NCPHA= 0)

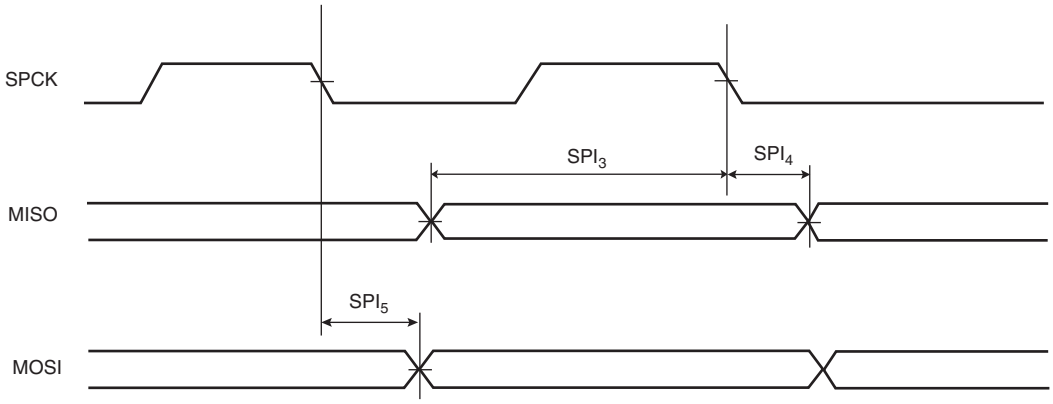

Figure 7-13. SPI Slave mode with (CPOL= 0 and NCPHA= 1) or (CPOL= 1 and NCPHA= 0)

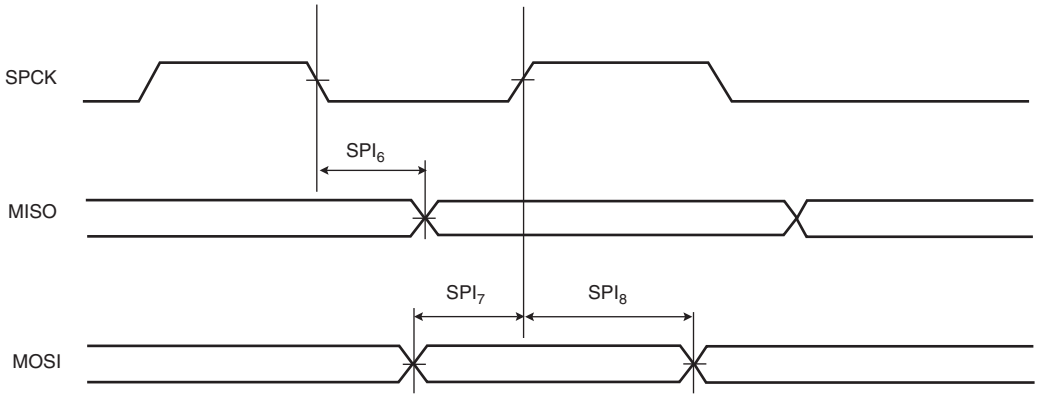

Figure 7-14. SPI Slave mode with (CPOL= NCPHA= 0) or (CPOL= NCPHA= 1)

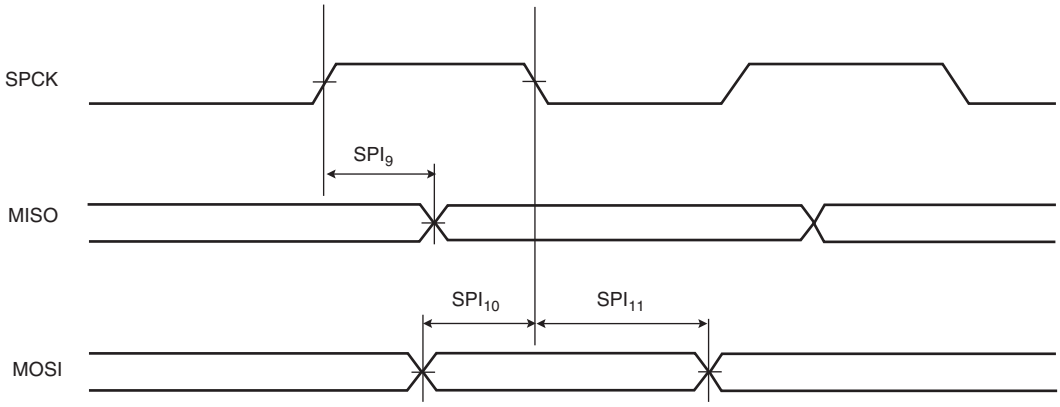

Table 7-38. SPI Timings

Symbol	Parameter	Conditions [1]	Min.	Max.	Unit
SPI_0	MISO Setup time before SPCK rises (master)	3.3V domain	22 + $(t_{CPMCK})/2$ [2]		ns
SPI_1	MISO Hold time after SPCK rises (master)	3.3V domain	0		ns
SPI_2	SPCK rising to MOSI Delay (master)	3.3V domain		7	ns
SPI_3	MISO Setup time before SPCK falls (master)	3.3V domain	22 + $(t_{CPMCK})/2$ [3]		ns
SPI_4	MISO Hold time after SPCK falls (master)	3.3V domain	0		ns
SPI_5	SPCK falling to MOSI Delay master)	3.3V domain		7	ns
SPI_6	SPCK falling to MISO Delay (slave)	3.3V domain		26.5	ns
SPI_7	MOSI Setup time before SPCK rises (slave)	3.3V domain	0		ns
SPI_8	MOSI Hold time after SPCK rises (slave)	3.3V domain	1.5		ns
SPI_9	SPCK rising to MISO Delay (slave)	3.3V domain		27	ns
SPI_{10}	MOSI Setup time before SPCK falls (slave)	3.3V domain	0		ns
SPI_{11}	MOSI Hold time after SPCK falls (slave)	3.3V domain	1		ns

1. 3.3V domain: V_{VDDIO} from 3.0V to 3.6V, maximum external capacitor = 40 pF
2. t_{CPMCK}: Master Clock period in ns.
3. t_{CPMCK}: Master Clock period in ns.

7.14 MCI

The High Speed MultiMedia Card Interface (MCI) supports the MultiMedia Card (MMC) Specification V4.2, the SD Memory Card Specification V2.0, the SDIO V1.1 specification and CE-ATA V1.1.

7.15 Flash Memory Characteristics

The following table gives the device maximum operating frequency depending on the field FWS of the Flash FSR register. This field defines the number of wait states required to access the Flash Memory. Flash operating frequency equals the CPU/HSB frequency.

Table 7-39. Flash Operating Frequency

Symbol	Parameter	Conditions	Min.	Typ.	Max.	Unit
F_{FOP}	Flash Operating Frequency	FWS = 0 High Speed Read Mode Disable -40°C < Ambient Temperature < 85°C			36	MHz
		FWS = 1 High Speed Read Mode Disable -40°C < Ambient Temperature < 85°C			66	MHz
		FWS = 0 High Speed Read Mode Enable -40°C < Ambient Temperature < 70°C			42	MHz
		FWS = 1 High Speed Read Mode Enable -40°C < Ambient Temperature < 70°C			84	MHz

Table 7-40. Parts Programming Time

Symbol	Parameter	Conditions	Min.	Typ.	Max.	Unit
T_{FPP}	Page Programming Time			5		ms
T_{FFP}	Fuse Programming Time			0.5		ms
T_{FCE}	Chip erase Time			8		ms

Table 7-41. Flash Parameters

Symbol	Parameter	Conditions	Min.	Typ.	Max.	Unit
N_{FARRAY}	Flash Array Write/Erase cycle				100K	cycle
N_{FFUSE}	General Purpose Fuses write cycle				1000	cycle
T_{FDR}	Flash Data Retention Time			15		year

8. Mechanical Characteristics

8.1 Thermal Considerations

8.1.1 Thermal Data

Table 8-1 summarizes the thermal resistance data depending on the package.

Table 8-1. Thermal Resistance Data

Symbol	Parameter	Condition	Package	Typ	Unit
θ_{JA}	Junction-to-ambient thermal resistance	Still Air	TQFP144	40.3	°C/W
θ_{JC}	Junction-to-case thermal resistance		TQFP144	9.5	
θ_{JA}	Junction-to-ambient thermal resistance	Still Air	TFBGA144	28.5	°C/W
θ_{JC}	Junction-to-case thermal resistance		TFBGA144	6.9	
θ_{JA}	Junction-to-ambient thermal resistance	Still Air	VFBGA100	31.1	°C/W
θ_{JC}	Junction-to-case thermal resistance		VFBGA100	6.9	

8.1.2 Junction Temperature

The average chip-junction temperature, T_J, in °C can be obtained from the following:

1. $T_J = T_A + (P_D \times \theta_{JA})$
2. $T_J = T_A + (P_D \times (\theta_{HEATSINK} + \theta_{JC}))$

where:

- θ_{JA} = package thermal resistance, Junction-to-ambient (°C/W), provided in Table 8-1 on page 68.
- θ_{JC} = package thermal resistance, Junction-to-case thermal resistance (°C/W), provided in Table 8-1 on page 68.
- $\theta_{HEAT\ SINK}$ = cooling device thermal resistance (°C/W), provided in the device datasheet.
- P_D = device power consumption (W) estimated from data provided in the section "Regulator characteristics" on page 43.
- T_A = ambient temperature (°C).

From the first equation, the user can derive the estimated lifetime of the chip and decide if a cooling device is necessary or not. If a cooling device is to be fitted on the chip, the second equation should be used to compute the resulting average chip-junction temperature T_J in °C.

8.2 Package Drawings

Figure 8-1. TFBGA 144 package drawing

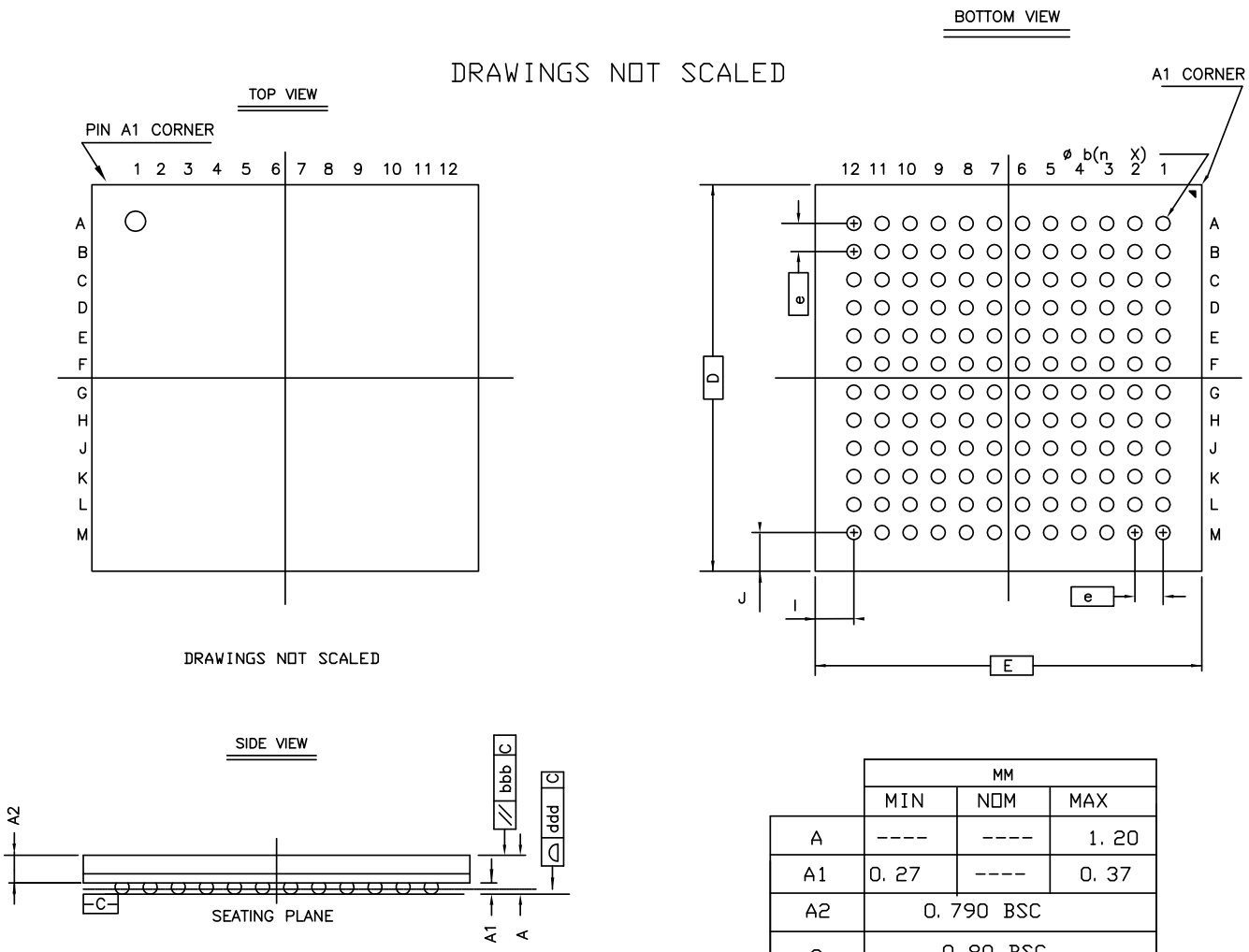

	MM		
	MIN	NOM	MAX
A	----	----	1.20
A1	0.27	----	0.37
A2	0.790 BSC		
e	0.80 BSC		
b	0.38	----	0.48
E/D	11.00 BSC		
I/J	1.100 REF		
ddd	coplanarity 0.120		
bbb	coplanarity 0.200		

Figure 8-2. LQFP-144 package drawing

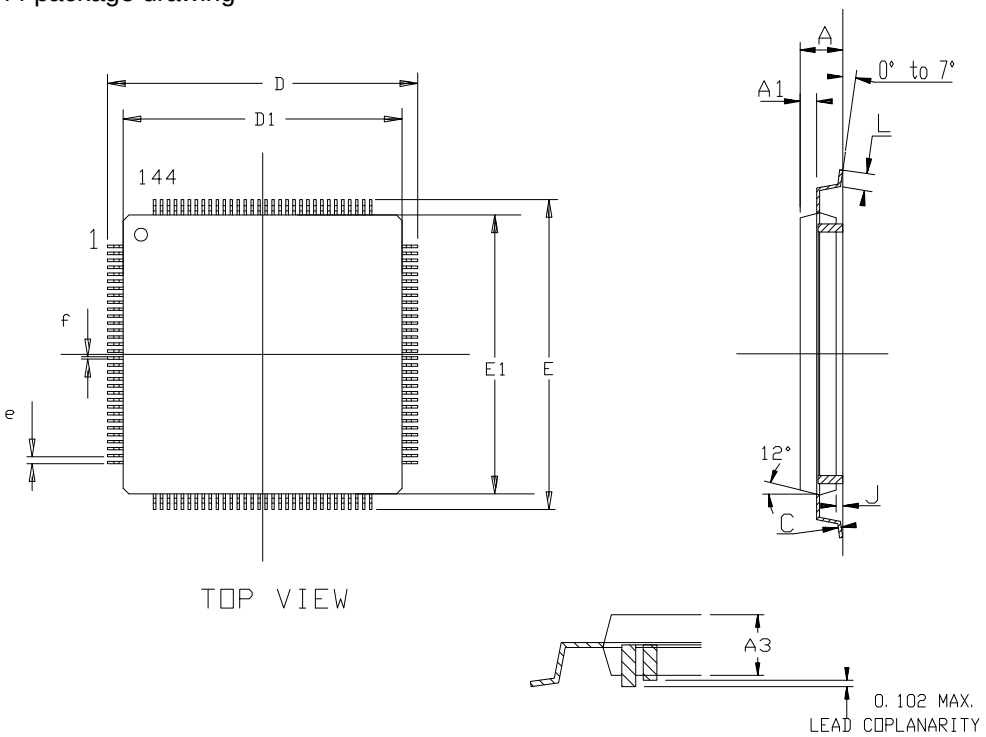

	MM Min	MM Nom	MM Max	INCH Min	INCH Nom	INCH Max
A	–	–	1.60	–	–	.063
C	0.09	–	0.20	.004	–	.008
A3	1.35	1.40	1.45	.053	.055	.057
D	21.90	22.00	22.10	.862	.866	.870
D1	19.90	20.00	20.10	.783	.787	.791
E	21.90	22.00	22.10	.862	.866	.870
E1	19.90	20.00	20.10	.783	.787	.791
J	0.05	–	0.15	.002	–	.006
L	0.45	0.60	0.75	.018	.024	.030
e	0.50 BSC			.0197 BSC		
f	0.22 BSC			.009 BSC		

Table 8-2. Device and Package Maximum Weight

1300	mg

Table 8-3. Package Characteristics

Moisture Sensitivity Level	MSL3

Table 8-4. Package Reference

JEDEC Drawing Reference	MS-026
JESD97 Classification	E3

Figure 8-3. VFBGA-100 package drawing

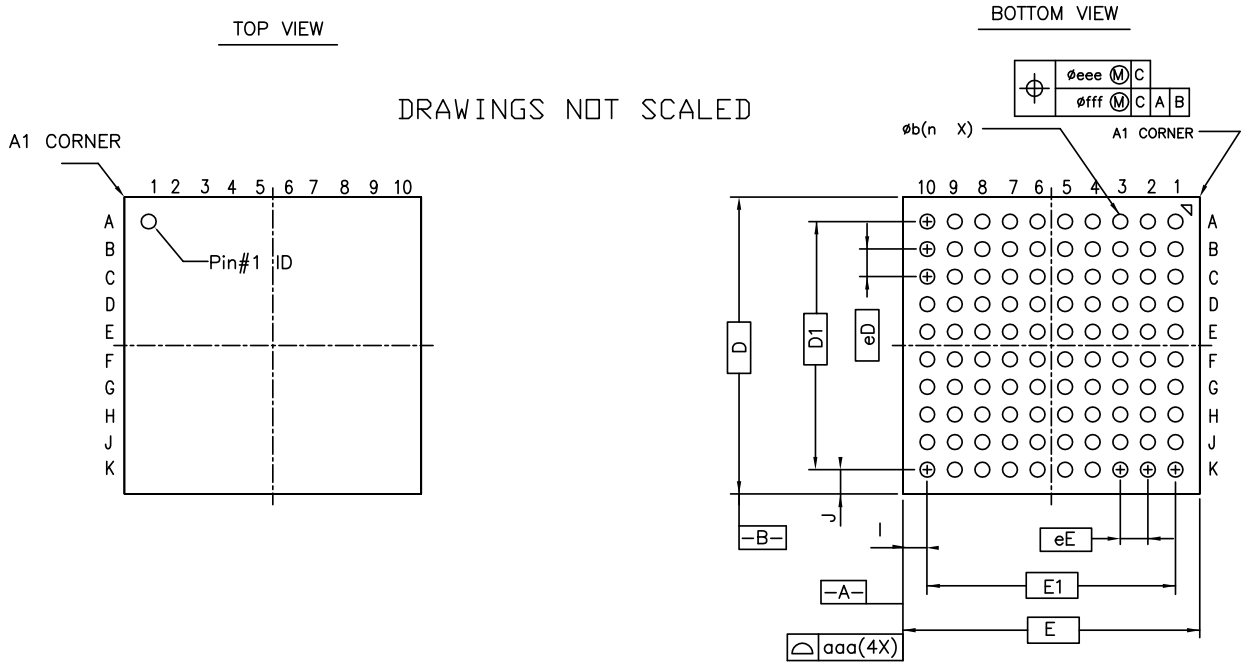

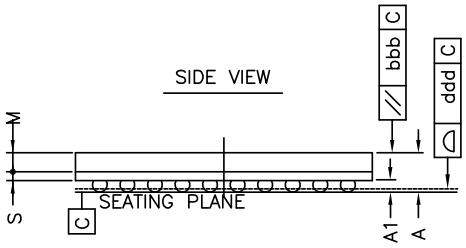

	MM		
	MIN	NOM	MAX
A	----	----	1.000
A1	0.220	----	0.320
M	0.450 BSC		
S	0.210 BSC		
b	0.300	----	0.400
E/D	7.00 +/- 0.100		
e	0.65 BSC		
I/J	0.570		
ddd	copla: 0.080		
bbb	mold flatness: 0.100		

8.3 Soldering Profile

Table 8-5 gives the recommended soldering profile from J-STD-20.

Table 8-5. Soldering Profile

Profile Feature	Green Package
Average Ramp-up Rate (217°C to Peak)	3°C/Second max
Preheat Temperature 175°C ±25°C	150-200°C
Time Maintained Above 217°C	60-150 seconds
Time within 5°C of Actual Peak Temperature	30 seconds
Peak Temperature Range	260 (+0/-5°C)
Ramp-down Rate	6°C/Second max.
Time 25°C to Peak Temperature	8 minutes max

Note: It is recommended to apply a soldering temperature higher than 250°C.

A maximum of three reflow passes is allowed per component.

9. Ordering Information

Device	Ordering Code	Package	Conditioning	Temperature Operating Range
AT32UC3A3256S	**AT32UC3A3256S-ALUT**	**144-lead LQFP**	Tray	Industrial (-40·C to 85·C)
	AT32UC3A3256S-ALUR	**144-lead LQFP**	Reels	Industrial (-40·C to 85·C)
	AT32UC3A3256S-CTUT	**144-ball TFBGA**	Tray	Industrial (-40·C to 85·C)
	AT32UC3A3256S-CTUR	**144-ball TFBGA**	Reels	Industrial (-40·C to 85·C)
AT32UC3A3256	**AT32UC3A3256-ALUT**	**144-lead LQFP**	Tray	Industrial (-40·C to 85·C)
	AT32UC3A3256-ALUR	**144-lead LQFP**	Reels	Industrial (-40·C to 85·C)
	AT32UC3A3256-CTUT	**144-ball TFBGA**	Tray	Industrial (-40·C to 85·C)
	AT32UC3A3256-CTUR	**144-ball TFBGA**	Reels	Industrial (-40·C to 85·C)
AT32UC3A3128S	**AT32UC3A3128S-ALUT**	**144-lead LQFP**	Tray	Industrial (-40·C to 85·C)
	AT32UC3A3128S-ALUR	**144-lead LQFP**	Reels	Industrial (-40·C to 85·C)
	AT32UC3A3128S-CTUT	**144-ball TFBGA**	Tray	Industrial (-40·C to 85·C)
	AT32UC3A3128S-CTUR	**144-ball TFBGA**	Reels	Industrial (-40·C to 85·C)
AT32UC3A3128	**AT32UC3A3128-ALUT**	**144-lead LQFP**	Tray	Industrial (-40·C to 85·C)
	AT32UC3A3128-ALUR	**144-lead LQFP**	Reels	Industrial (-40·C to 85·C)
	AT32UC3A3128-CTUT	**144-ball TFBGA**	Tray	Industrial (-40·C to 85·C)
	AT32UC3A3128-CTUR	**144-ball TFBGA**	Reels	Industrial (-40·C to 85·C)
AT32UC3A364S	**AT32UC3A364S-ALUT**	**144-lead LQFP**	Tray	Industrial (-40·C to 85·C)
	AT32UC3A364S-ALUR	**144-lead LQFP**	Reels	Industrial (-40·C to 85·C)
	AT32UC3A364S-CTUT	**144-ball TFBGA**	Tray	Industrial (-40·C to 85·C)
	AT32UC3A364S-CTUR	**144-ball TFBGA**	Reels	Industrial (-40·C to 85·C)
AT32UC3A364	**AT32UC3A364-ALUT**	**144-lead LQFP**	Tray	Industrial (-40·C to 85·C)
	AT32UC3A364-ALUR	**144-lead LQFP**	Reels	Industrial (-40·C to 85·C)
	AT32UC3A364-CTUT	**144-ball TFBGA**	Tray	Industrial (-40·C to 85·C)
	AT32UC3A364-CTUR	**144-ball TFBGA**	Reels	Industrial (-40·C to 85·C)
AT32UC3A4256S	**AT32UC3A4256S-C1UT**	**100-ball VFBGA**	Tray	Industrial (-40·C to 85·C)
	AT32UC3A4256S-C1UR	**100-ball VFBGA**	Reels	Industrial (-40·C to 85·C)
AT32UC3A4256	**AT32UC3A4256-C1UT**	**100-ball VFBGA**	Tray	Industrial (-40·C to 85·C)
	AT32UC3A4256-C1UR	**100-ball VFBGA**	Reels	Industrial (-40·C to 85·C)
AT32UC3A4128S	**AT32UC3A4128S-C1UT**	**100-ball VFBGA**	Tray	Industrial (-40·C to 85·C)
	AT32UC3A4128S-C1UR	**100-ball VFBGA**	Reels	Industrial (-40·C to 85·C)
AT32UC3A4128	**AT32UC3A4128-C1UT**	**100-ball VFBGA**	Tray	Industrial (-40·C to 85·C)
	AT32UC3A4128-C1UR	**100-ball VFBGA**	Reels	Industrial (-40·C to 85·C)
AT32UC3A464S	**AT32UC3A464S-C1UT**	**100-ball VFBGA**	Tray	Industrial (-40·C to 85·C)
	AT32UC3A464S-C1UR	**100-ball VFBGA**	Reels	Industrial (-40·C to 85·C)
AT32UC3A464	**AT32UC3A464-C1UT**	**100-ball VFBGA**	Tray	Industrial (-40·C to 85·C)
	AT32UC3A464-C1UR	**100-ball VFBGA**	Reels	Industrial (-40·C to 85·C)

10. Errata

10.1 Rev. H

10.1.1 General

Devices with Date Code lower than 1233 cannot operate with CPU frequency higher than 66MHz in 1WS and 36MHz in 0WS in the whole temperature range
Fix/Workaround
None

DMACA data transfer fails when CTLx.SRC_TR_WIDTH is not equal to CTLx.DST_TR_WIDTH
Fix/Workaround
For any DMACA transfer make sure CTLx.SRC_TR_WIDTH = CTLx.DST_TR_WIDTH.

10.1.2 Processor and Architecture

LDM instruction with PC in the register list and without ++ increments Rp
For LDM with PC in the register list: the instruction behaves as if the ++ field is always set, ie the pointer is always updated. This happens even if the ++ field is cleared. Specifically, the increment of the pointer is done in parallel with the testing of R12.
Fix/Workaround
None.

Hardware breakpoints may corrupt MAC results
Hardware breakpoints on MAC instructions may corrupt the destination register of the MAC instruction.
Fix/Workaround
Place breakpoints on earlier or later instructions.

When the main clock is RCSYS, TIMER_CLOCK5 is equal to PBA clock
When the main clock is generated from RCSYS, TIMER_CLOCK5 is equal to PBA Clock and not PBA Clock / 128.
Fix/Workaround
None.

10.1.3 MPU

Privilege violation when using interrupts in application mode with protected system stack
If the system stack is protected by the MPU and an interrupt occurs in application mode, an MPU DTLB exception will occur.
Fix/Workaround
Make a DTLB Protection (Write) exception handler which permits the interrupt request to be handled in privileged mode.

10.1.4 USB

UPCFGn.INTFRQ is irrelevant for isochronous pipe
As a consequence, isochronous IN and OUT tokens are sent every 1ms (Full Speed), or every 125uS (High Speed).
Fix/Workaround

For higher polling time, the software must freeze the pipe for the desired period in order to prevent any "extra" token.

10.1.5 ADC

Sleep Mode activation needs additional A to D conversion
If the ADC sleep mode is activated when the ADC is idle the ADC will not enter sleep mode before after the next AD conversion.
Fix/Workaround
Activate the sleep mode in the mode register and then perform an AD conversion.

10.1.6 USART

ISO7816 info register US_NER cannot be read
The NER register always returns zero.
Fix/Workaround
None.

The LIN ID is not transmitted in mode PDCM='0'
Fix/Workaround
Using USART in mode LIN master with the PDCM bit = '0', the LINID written at the first address of the transmit buffer is not used. The LINID must be written in the LINIR register, after the configuration and start of the PDCA transfer. Writing the LINID in the LINIR register will start the transfer whenever the PDCA transfer is ready.

The LINID interrupt is only available for the header reception and not available for the header transmission
Fix/Workaround
None.

USART LIN mode is not functional with the PDCA if PDCM bit in LINMR register is set to 1
If a PDCA transfer is initiated in USART LIN mode with PDCM bit set to 1, the transfer never starts.
Fix/Workaround
Only use PDCM=0 configuration with the PDCA transfer.

10.1.7 SPI

SPI disable does not work in SLAVE mode
SPI disable does not work in SLAVE mode.
Fix/Workaround
Read the last received data, then perform a software reset by writing a one to the Software Reset bit in the Control Register (CR.SWRST).

SPI bad serial clock generation on 2nd chip_select when SCBR=1, CPOL=1, and NCPHA=0
When multiple chip selects (CS) are in use, if one of the baudrates equal 1 while one (CSRn.SCBR=1) of the others do not equal 1, and CSRn.CPOL=1 and CSRn.NCPHA=0, then an additional pulse will be generated on SCK.
Fix/Workaround
When multiple CS are in use, if one of the baudrates equals 1, the others must also equal 1 if CSRn.CPOL=1 and CSRn.NCPHA=0.

SPI data transfer hangs with CSR0.CSAAT==1 and MR.MODFDIS==0
When CSR0.CSAAT==1 and mode fault detection is enabled (MR.MODFDIS==0), the SPI module will not start a data transfer.
Fix/Workaround
Disable mode fault detection by writing a one to MR.MODFDIS.

Disabling SPI has no effect on the SR.TDRE bit
Disabling SPI has no effect on the SR.TDRE bit whereas the write data command is filtered when SPI is disabled. Writing to TDR when SPI is disabled will not clear SR.TDRE. If SPI is disabled during a PDCA transfer, the PDCA will continue to write data to TDR until its buffer is empty, and this data will be lost.
Fix/Workaround
Disable the PDCA, add two NOPs, and disable the SPI. To continue the transfer, enable the SPI and PDCA.

10.1.8 Power Manager

OSC32 not functionnal in Crystal Modes (OSC32CTRL.MODE=1 or OSC32CTRL.MODE=2)
OSC32 clock output is not active even if the oscillation signal is present on XIN32/XOUT32 pins.
OSC32RDY bit may still set even if the CLK32 is not active.
External clock mode (OSC32CTRL.MODE=0) is not affected.

Fix/Workaround
None.

Clock sources will not be stopped in STATIC sleep mode if the difference between CPU and PBx division factor is too high
If the division factor between the CPU/HSB and PBx frequencies is more than 4 when going to a sleep mode where the system RC oscillator is turned off, then high speed clock sources will not be turned off. This will result in a significantly higher power consumption during the sleep mode.
Fix/Workaround
Before going to sleep modes where the system RC oscillator is stopped, make sure that the factor between the CPU/HSB and PBx frequencies is less than or equal to 4.

10.1.9 PDCA

PCONTROL.CHxRES is non-functional
PCONTROL.CHxRES is non-functional. Counters are reset at power-on, and cannot be reset by software.
Fix/Workaround
Software needs to keep history of performance counters.

Transfer error will stall a transmit peripheral handshake interface
If a transfer error is encountered on a channel transmitting to a peripheral, the peripheral handshake of the active channel will stall and the PDCA will not do any more transfers on the affected peripheral handshake interface.
Fix/Workaround
Disable and then enable the peripheral after the transfer error.

10.1.10 AES

URAD (Unspecified Register Access Detection Status) does not detect read accesses to the write-only KEYW[5..8]R registers
Fix/Workaround
None.

10.1.11 HMATRIX

In the PRAS and PRBS registers, the MxPR fields are only two bits
In the PRAS and PRBS registers, the MxPR fields are only two bits wide, instead of four bits. The unused bits are undefined when reading the registers.
Fix/Workaround
Mask undefined bits when reading PRAS and PRBS.

10.1.12 TWIM

TWIM SR.IDLE goes high immediately when NAK is received
When a NAK is received and there is a non-zero number of bytes to be transmitted, SR.IDLE goes high immediately and does not wait for the STOP condition to be sent. This does not cause any problem just by itself, but can cause a problem if software waits for SR.IDLE to go high and then immediately disables the TWIM by writing a one to CR.MDIS. Disabling the TWIM causes the TWCK and TWD pins to go high immediately, so the STOP condition will not be transmitted correctly.
Fix/Workaround
If possible, do not disable the TWIM. If it is absolutely necessary to disable the TWIM, there must be a software delay of at least two TWCK periods between the detection of SR.IDLE==1 and the disabling of the TWIM.

TWIM TWALM polarity is wrong
The TWALM signal in the TWIM is active high instead of active low.
Fix/Workaround
Use an external inverter to invert the signal going into the TWIM. When using both TWIM and TWIS on the same pins, the TWALM cannot be used.

SMBALERT bit may be set after reset
The SMBus Alert (SMBALERT) bit in the Status Register (SR) might be erroneously set after system reset.
Fix/Workaround
After system reset, clear the SR.SMBALERT bit before commencing any TWI transfer.

10.1.13 TWIS

Clearing the NAK bit before the BTF bit is set locks up the TWI bus
When the TWIS is in transmit mode, clearing the NAK Received (NAK) bit of the Status Register (SR) before the end of the Acknowledge/Not Acknowledge cycle will cause the TWIS to attempt to continue transmitting data, thus locking up the bus.
Fix/Workaround
Clear SR.NAK only after the Byte Transfer Finished (BTF) bit of the same register has been set.

TWIS stretch on Address match error
When the TWIS stretches TWCK due to a slave address match, it also holds TWD low for the same duration if it is to be receiving data. When TWIS releases TWCK, it releases TWD at the same time. This can cause a TWI timing violation.
Fix/Workaround
None.

10.1.14 SSC

Frame Synchro and Frame Synchro Data are delayed by one clock cycle
The frame synchro and the frame synchro data are delayed from 1 SSC_CLOCK when:
- Clock is CKDIV
- The START is selected on either a frame synchro edge or a level
- Frame synchro data is enabled
- Transmit clock is gated on output (through CKO field)

Fix/Workaround
Transmit or receive CLOCK must not be gated (by the mean of CKO field) when START condition is performed on a generated frame synchro.

10.1.15 FLASHC

Corrupted read in flash may happen after fuses write or erase operations (FLASHC LP, UP, WGPB, EGPB, SSB, PGPFB, EAGPF commands)
After a flash fuse write or erase operation (FLASHC LP, UP, WGPB, EGPB, SSB, PGPFB, EAGPF commands), reading (data read or code fetch) in flash may fail. This may lead to an exception or to other errors derived from this corrupted read access.
Fix/Workaround
Before the flash fuse write or erase operation, enable the flash high speed mode (FLASHC HSEN command). The flash fuse write or erase operations (FLASHC LP, UP, WGPB, EGPB, SSB, PGPFB, EAGPF commands) must be issued from RAM or through the EBI. After these commands, read 3 times one flash page initialized to 00h. Disable the flash high speed mode (FLASHC HSDIS command). It is then possible to safely read or code fetch the flash.

10.2 Rev. E

10.2.1 General

Devices cannot operate with CPU frequency higher than 66MHz in 1WS and 36MHz in 0WS
Fix/Workaround
None

Increased Power Consumption in VDDIO in sleep modes
If the OSC0 is enabled in crystal mode when entering a sleep mode where the OSC0 is disabled, this will lead to an increased power consumption in VDDIO.
Fix/Workaround
Disable the OSC0 through the System Control Interface (SCIF) before going to any sleep mode where the OSC0 is disabled, or pull down or up XIN0 and XOUT0 with 1 Mohm resistor.

Power consumption in static mode The power consumption in static mode can be up to 330µA on some parts (typical at 25°C)

Fix/Workaround
Set to 1b bit CORRS4 of the ECCHRS mode register (MD). In C-code: *((volatile int*) (0xFFFE2404))= 0x400.

DMACA data transfer fails when CTLx.SRC_TR_WIDTH is not equal to CTLx.DST_TR_WIDTH
Fix/Workaround
For any DMACA transfer make sure CTLx.SRC_TR_WIDTH = CTLx.DST_TR_WIDTH.

3.3V supply monitor is not available
FGPFRLO[30:29] are reserved and should not be used by the application.
Fix/Workaround
None.

Service access bus (SAB) can not access DMACA registers
Fix/Workaround
None.

10.2.2 Processor and Architecture

LDM instruction with PC in the register list and without ++ increments Rp
For LDM with PC in the register list: the instruction behaves as if the ++ field is always set, ie the pointer is always updated. This happens even if the ++ field is cleared. Specifically, the increment of the pointer is done in parallel with the testing of R12.
Fix/Workaround
None.

Hardware breakpoints may corrupt MAC results
Hardware breakpoints on MAC instructions may corrupt the destination register of the MAC instruction.
Fix/Workaround
Place breakpoints on earlier or later instructions.

When the main clock is RCSYS, TIMER_CLOCK5 is equal to PBA clock
When the main clock is generated from RCSYS, TIMER_CLOCK5 is equal to PBA Clock and not PBA Clock / 128.
Fix/Workaround
None.

10.2.3 MPU

Privilege violation when using interrupts in application mode with protected system stack
If the system stack is protected by the MPU and an interrupt occurs in application mode, an MPU DTLB exception will occur.
Fix/Workaround
Make a DTLB Protection (Write) exception handler which permits the interrupt request to be handled in privileged mode.

10.2.4 USB

UPCFGn.INTFRQ is irrelevant for isochronous pipe
As a consequence, isochronous IN and OUT tokens are sent every 1ms (Full Speed), or every 125uS (High Speed).

Fix/Workaround
For higher polling time, the software must freeze the pipe for the desired period in order to prevent any "extra" token.

10.2.5 ADC

Sleep Mode activation needs additional A to D conversion
If the ADC sleep mode is activated when the ADC is idle the ADC will not enter sleep mode before after the next AD conversion.
Fix/Workaround
Activate the sleep mode in the mode register and then perform an AD conversion.

10.2.6 USART

ISO7816 info register US_NER cannot be read
The NER register always returns zero.
Fix/Workaround
None.

The LIN ID is not transmitted in mode PDCM='0'
Fix/Workaround
Using USART in mode LIN master with the PDCM bit = '0', the LINID written at the first address of the transmit buffer is not used. The LINID must be written in the LINIR register, after the configuration and start of the PDCA transfer. Writing the LINID in the LINIR register will start the transfer whenever the PDCA transfer is ready.

The LINID interrupt is only available for the header reception and not available for the header transmission
Fix/Workaround
None.

USART LIN mode is not functional with the PDCA if PDCM bit in LINMR register is set to 1
If a PDCA transfer is initiated in USART LIN mode with PDCM bit set to 1, the transfer never starts.
Fix/Workaround
Only use PDCM=0 configuration with the PDCA transfer.

The RTS output does not function correctly in hardware handshaking mode
The RTS signal is not generated properly when the USART receives data in hardware handshaking mode. When the Peripheral DMA receive buffer becomes full, the RTS output should go high, but it will stay low.
Fix/Workaround
Do not use the hardware handshaking mode of the USART. If it is necessary to drive the RTS output high when the Peripheral DMA receive buffer becomes full, use the normal mode of the USART. Configure the Peripheral DMA Controller to signal an interrupt when the receive buffer is full. In the interrupt handler code, write a one to the RTSDIS bit in the USART Control Register (CR). This will drive the RTS output high. After the next DMA transfer is started and a receive buffer is available, write a one to the RTSEN bit in the USART CR so that RTS will be driven low.

ISO7816 Mode T1: RX impossible after any TX
RX impossible after any TX.

Fix/Workaround
SOFT_RESET on RX+ Config US_MR + Config_US_CR.

10.2.7 SPI

SPI disable does not work in SLAVE mode
SPI disable does not work in SLAVE mode.
Fix/Workaround
Read the last received data, then perform a software reset by writing a one to the Software Reset bit in the Control Register (CR.SWRST).

SPI bad serial clock generation on 2nd chip_select when SCBR=1, CPOL=1, and NCPHA=0
When multiple chip selects (CS) are in use, if one of the baudrates equal 1 while one (CSRn.SCBR=1) of the others do not equal 1, and CSRn.CPOL=1 and CSRn.NCPHA=0, then an additional pulse will be generated on SCK.
Fix/Workaround
When multiple CS are in use, if one of the baudrates equals 1, the others must also equal 1 if CSRn.CPOL=1 and CSRn.NCPHA=0.

SPI data transfer hangs with CSR0.CSAAT==1 and MR.MODFDIS==0
When CSR0.CSAAT==1 and mode fault detection is enabled (MR.MODFDIS==0), the SPI module will not start a data transfer.
Fix/Workaround
Disable mode fault detection by writing a one to MR.MODFDIS.

Disabling SPI has no effect on the SR.TDRE bit
Disabling SPI has no effect on the SR.TDRE bit whereas the write data command is filtered when SPI is disabled. Writing to TDR when SPI is disabled will not clear SR.TDRE. If SPI is disabled during a PDCA transfer, the PDCA will continue to write data to TDR until its buffer is empty, and this data will be lost.
Fix/Workaround
Disable the PDCA, add two NOPs, and disable the SPI. To continue the transfer, enable the SPI and PDCA.

10.2.8 Power Manager

OSC32 not functionnal in Crystal Modes (OSC32CTRL.MODE=1 or OSC32CTRL.MODE=2)
OSC32 clock output is not active even if the oscillation signal is present on XIN32/XOUT32 pins.
OSC32RDY bit may still set even if the CLK32 is not active.
External clock mode (OSC32CTRL.MODE=0) is not affected.

Fix/Workaround
None.

Clock sources will not be stopped in STATIC sleep mode if the difference between CPU and PBx division factor is too high
If the division factor between the CPU/HSB and PBx frequencies is more than 4 when going to a sleep mode where the system RC oscillator is turned off, then high speed clock sources will not be turned off. This will result in a significantly higher power consumption during the sleep mode.

Fix/Workaround
Before going to sleep modes where the system RC oscillator is stopped, make sure that the factor between the CPU/HSB and PBx frequencies is less than or equal to 4.

10.2.9 PDCA

PCONTROL.CHxRES is non-functional
PCONTROL.CHxRES is non-functional. Counters are reset at power-on, and cannot be reset by software.
Fix/Workaround
Software needs to keep history of performance counters.

Transfer error will stall a transmit peripheral handshake interface
If a transfer error is encountered on a channel transmitting to a peripheral, the peripheral handshake of the active channel will stall and the PDCA will not do any more transfers on the affected peripheral handshake interface.
Fix/Workaround
Disable and then enable the peripheral after the transfer error.

10.2.10 AES

URAD (Unspecified Register Access Detection Status) does not detect read accesses to the write-only KEYW[5..8]R registers
Fix/Workaround
None.

10.2.11 HMATRIX

In the PRAS and PRBS registers, the MxPR fields are only two bits
In the PRAS and PRBS registers, the MxPR fields are only two bits wide, instead of four bits. The unused bits are undefined when reading the registers.
Fix/Workaround
Mask undefined bits when reading PRAS and PRBS.

10.2.12 TWIM

TWIM SR.IDLE goes high immediately when NAK is received
When a NAK is received and there is a non-zero number of bytes to be transmitted, SR.IDLE goes high immediately and does not wait for the STOP condition to be sent. This does not cause any problem just by itself, but can cause a problem if software waits for SR.IDLE to go high and then immediately disables the TWIM by writing a one to CR.MDIS. Disabling the TWIM causes the TWCK and TWD pins to go high immediately, so the STOP condition will not be transmitted correctly.
Fix/Workaround
If possible, do not disable the TWIM. If it is absolutely necessary to disable the TWIM, there must be a software delay of at least two TWCK periods between the detection of SR.IDLE==1 and the disabling of the TWIM.

TWIM TWALM polarity is wrong
The TWALM signal in the TWIM is active high instead of active low.
Fix/Workaround
Use an external inverter to invert the signal going into the TWIM. When using both TWIM and TWIS on the same pins, the TWALM cannot be used.

SMBALERT bit may be set after reset
The SMBus Alert (SMBALERT) bit in the Status Register (SR) might be erroneously set after system reset.
Fix/Workaround
After system reset, clear the SR.SMBALERT bit before commencing any TWI transfer.

10.2.13 TWIS

Clearing the NAK bit before the BTF bit is set locks up the TWI bus
When the TWIS is in transmit mode, clearing the NAK Received (NAK) bit of the Status Register (SR) before the end of the Acknowledge/Not Acknowledge cycle will cause the TWIS to attempt to continue transmitting data, thus locking up the bus.
Fix/Workaround
Clear SR.NAK only after the Byte Transfer Finished (BTF) bit of the same register has been set.

TWIS stretch on Address match error
When the TWIS stretches TWCK due to a slave address match, it also holds TWD low for the same duration if it is to be receiving data. When TWIS releases TWCK, it releases TWD at the same time. This can cause a TWI timing violation.
Fix/Workaround
None.

10.2.14 MCI

MCI_CLK features is not available on PX12, PX13 and PX40
Fix/Workaround
MCI_CLK feature is available on PA27 only.

The busy signal of the responses R1b is not taken in account for CMD12 STOP_TRANSFER
It is not possible to know the busy status of the card during the response (R1b) for the commands CMD12.
Fix/Workaround
The card busy line should be polled through the GPIO Input Value register (IVR) for commands CMD12.

10.2.15 SSC

Frame Synchro and Frame Synchro Data are delayed by one clock cycle
The frame synchro and the frame synchro data are delayed from 1 SSC_CLOCK when:
- Clock is CKDIV
- The START is selected on either a frame synchro edge or a level
- Frame synchro data is enabled
- Transmit clock is gated on output (through CKO field)

Fix/Workaround
Transmit or receive CLOCK must not be gated (by the mean of CKO field) when START condition is performed on a generated frame synchro.

10.2.16 FLASHC

Corrupted read in flash may happen after fuses write or erase operations (FLASHC LP, UP, WGPB, EGPB, SSB, PGPFB, EAGPF commands)
After a flash fuse write or erase operation (FLASHC LP, UP, WGPB, EGPB, SSB, PGPFB, EAGPF commands), reading (data read or code fetch) in flash may fail. This may lead to an exception or to other errors derived from this corrupted read access.
Fix/Workaround
Before the flash fuse write or erase operation, enable the flash high speed mode (FLASHC HSEN command). The flash fuse write or erase operations (FLASHC LP, UP, WGPB, EGPB, SSB, PGPFB, EAGPF commands) must be issued from RAM or through the EBI. After these commands, read 3 times one flash page initialized to 00h. Disable the flash high speed mode (FLASHC HSDIS command). It is then possible to safely read or code fetch the flash.

10.3 Rev. D

10.3.1 General

Devices cannot operate with CPU frequency higher than 66MHz in 1WS and 36MHz in 0WS
Fix/Workaround
None

DMACA data transfer fails when CTLx.SRC_TR_WIDTH is not equal to CTLx.DST_TR_WIDTH
Fix/Workaround
For any DMACA transfer make sure CTLx.SRC_TR_WIDTH = CTLx.DST_TR_WIDTH.

3.3V supply monitor is not available
FGPFRLO[30:29] are reserved and should not be used by the application.
Fix/Workaround
None.

Service access bus (SAB) can not access DMACA registers
Fix/Workaround
None.

10.3.2 Processor and Architecture

LDM instruction with PC in the register list and without ++ increments Rp
For LDM with PC in the register list: the instruction behaves as if the ++ field is always set, ie the pointer is always updated. This happens even if the ++ field is cleared. Specifically, the increment of the pointer is done in parallel with the testing of R12.
Fix/Workaround
None.

Hardware breakpoints may corrupt MAC results
Hardware breakpoints on MAC instructions may corrupt the destination register of the MAC instruction.
Fix/Workaround
Place breakpoints on earlier or later instructions.

When the main clock is RCSYS, TIMER_CLOCK5 is equal to PBA clock
When the main clock is generated from RCSYS, TIMER_CLOCK5 is equal to PBA Clock and not PBA Clock / 128.
Fix/Workaround
None.

RETE instruction does not clear SREG[L] from interrupts
The RETE instruction clears SREG[L] as expected from exceptions.
Fix/Workaround
When using the STCOND instruction, clear SREG[L] in the stacked value of SR before returning from interrupts with RETE.

RETS behaves incorrectly when MPU is enabled
RETS behaves incorrectly when MPU is enabled and MPU is configured so that system stack is not readable in unprivileged mode.
Fix/Workaround
Make system stack readable in unprivileged mode, or return from supervisor mode using rete instead of rets. This requires:
1. Changing the mode bits from 001 to 110 before issuing the instruction. Updating the mode bits to the desired value must be done using a single mtsr instruction so it is done atomically. Even if this step is generally described as not safe in the UC technical reference manual, it is safe in this very specific case.
2. Execute the RETE instruction.

In the PRAS and PRBS registers, the MxPR fields are only two bits
In the PRAS and PRBS registers, the MxPR fields are only two bits wide, instead of four bits. The unused bits are undefined when reading the registers.
Fix/Workaround
Mask undefined bits when reading PRAS and PRBS.

Multiply instructions do not work on RevD
All the multiply instructions do not work.
Fix/Workaround
Do not use the multiply instructions.

10.3.3 MPU

Privilege violation when using interrupts in application mode with protected system stack
If the system stack is protected by the MPU and an interrupt occurs in application mode, an MPU DTLB exception will occur.
Fix/Workaround
Make a DTLB Protection (Write) exception handler which permits the interrupt request to be handled in privileged mode.

10.3.4 USB

UPCFGn.INTFRQ is irrelevant for isochronous pipe
As a consequence, isochronous IN and OUT tokens are sent every 1ms (Full Speed), or every 125uS (High Speed).
Fix/Workaround
For higher polling time, the software must freeze the pipe for the desired period in order to prevent any "extra" token.

10.3.5 ADC

Sleep Mode activation needs additional A to D conversion
If the ADC sleep mode is activated when the ADC is idle the ADC will not enter sleep mode before after the next AD conversion.
Fix/Workaround
Activate the sleep mode in the mode register and then perform an AD conversion.

10.3.6 USART

ISO7816 info register US_NER cannot be read
The NER register always returns zero.
Fix/Workaround
None.

The LIN ID is not transmitted in mode PDCM='0'
Fix/Workaround
Using USART in mode LIN master with the PDCM bit = '0', the LINID written at the first address of the transmit buffer is not used. The LINID must be written in the LINIR register, after the configuration and start of the PDCA transfer. Writing the LINID in the LINIR register will start the transfer whenever the PDCA transfer is ready.

The LINID interrupt is only available for the header reception and not available for the header transmission
Fix/Workaround
None.

USART LIN mode is not functional with the PDCA if PDCM bit in LINMR register is set to 1
If a PDCA transfer is initiated in USART LIN mode with PDCM bit set to 1, the transfer never starts.
Fix/Workaround
Only use PDCM=0 configuration with the PDCA transfer.

The RTS output does not function correctly in hardware handshaking mode
The RTS signal is not generated properly when the USART receives data in hardware handshaking mode. When the Peripheral DMA receive buffer becomes full, the RTS output should go high, but it will stay low.
Fix/Workaround
Do not use the hardware handshaking mode of the USART. If it is necessary to drive the RTS output high when the Peripheral DMA receive buffer becomes full, use the normal mode of the USART. Configure the Peripheral DMA Controller to signal an interrupt when the receive buffer is full. In the interrupt handler code, write a one to the RTSDIS bit in the USART Control Register (CR). This will drive the RTS output high. After the next DMA transfer is started and a receive buffer is available, write a one to the RTSEN bit in the USART CR so that RTS will be driven low.

ISO7816 Mode T1: RX impossible after any TX
RX impossible after any TX.
Fix/Workaround
SOFT_RESET on RX+ Config US_MR + Config_US_CR.

10.3.7 SPI

SPI disable does not work in SLAVE mode
SPI disable does not work in SLAVE mode.
Fix/Workaround
Read the last received data, then perform a software reset by writing a one to the Software Reset bit in the Control Register (CR.SWRST).

SPI bad serial clock generation on 2nd chip_select when SCBR=1, CPOL=1, and NCPHA=0
When multiple chip selects (CS) are in use, if one of the baudrates equal 1 while one (CSRn.SCBR=1) of the others do not equal 1, and CSRn.CPOL=1 and CSRn.NCPHA=0, then an additional pulse will be generated on SCK.
Fix/Workaround
When multiple CS are in use, if one of the baudrates equals 1, the others must also equal 1 if CSRn.CPOL=1 and CSRn.NCPHA=0.

SPI data transfer hangs with CSR0.CSAAT==1 and MR.MODFDIS==0
When CSR0.CSAAT==1 and mode fault detection is enabled (MR.MODFDIS==0), the SPI module will not start a data transfer.
Fix/Workaround
Disable mode fault detection by writing a one to MR.MODFDIS.

Disabling SPI has no effect on the SR.TDRE bit
Disabling SPI has no effect on the SR.TDRE bit whereas the write data command is filtered when SPI is disabled. Writing to TDR when SPI is disabled will not clear SR.TDRE. If SPI is disabled during a PDCA transfer, the PDCA will continue to write data to TDR until its buffer is empty, and this data will be lost.
Fix/Workaround
Disable the PDCA, add two NOPs, and disable the SPI. To continue the transfer, enable the SPI and PDCA.

10.3.8 Power Manager

OSC32 not functionnal in Crystal Modes (OSC32CTRL.MODE=1 or OSC32CTRL.MODE=2)
OSC32 clock output is not active even if the oscillation signal is present on XIN32/XOUT32 pins.
OSC32RDY bit may still set even if the CLK32 is not active.
External clock mode (OSC32CTRL.MODE=0) is not affected.

Fix/Workaround
None.

Clock sources will not be stopped in STATIC sleep mode if the difference between CPU and PBx division factor is too high
If the division factor between the CPU/HSB and PBx frequencies is more than 4 when going to a sleep mode where the system RC oscillator is turned off, then high speed clock sources will not be turned off. This will result in a significantly higher power consumption during the sleep mode.
Fix/Workaround
Before going to sleep modes where the system RC oscillator is stopped, make sure that the factor between the CPU/HSB and PBx frequencies is less than or equal to 4.

10.3.9 PDCA

PCONTROL.CHxRES is non-functional
PCONTROL.CHxRES is non-functional. Counters are reset at power-on, and cannot be reset by software.
Fix/Workaround
Software needs to keep history of performance counters.

Transfer error will stall a transmit peripheral handshake interface
If a transfer error is encountered on a channel transmitting to a peripheral, the peripheral handshake of the active channel will stall and the PDCA will not do any more transfers on the affected peripheral handshake interface.
Fix/Workaround
Disable and then enable the peripheral after the transfer error.

10.3.10 AES

URAD (Unspecified Register Access Detection Status) does not detect read accesses to the write-only KEYW[5..8]R registers
Fix/Workaround
None.

10.3.11 HMATRIX

In the PRAS and PRBS registers, the MxPR fields are only two bits
In the PRAS and PRBS registers, the MxPR fields are only two bits wide, instead of four bits. The unused bits are undefined when reading the registers.
Fix/Workaround
Mask undefined bits when reading PRAS and PRBS.

10.3.12 TWIM

TWIM SR.IDLE goes high immediately when NAK is received
When a NAK is received and there is a non-zero number of bytes to be transmitted, SR.IDLE goes high immediately and does not wait for the STOP condition to be sent. This does not cause any problem just by itself, but can cause a problem if software waits for SR.IDLE to go high and then immediately disables the TWIM by writing a one to CR.MDIS. Disabling the TWIM causes the TWCK and TWD pins to go high immediately, so the STOP condition will not be transmitted correctly.
Fix/Workaround
If possible, do not disable the TWIM. If it is absolutely necessary to disable the TWIM, there must be a software delay of at least two TWCK periods between the detection of SR.IDLE==1 and the disabling of the TWIM.

TWIM TWALM polarity is wrong
The TWALM signal in the TWIM is active high instead of active low.
Fix/Workaround
Use an external inverter to invert the signal going into the TWIM. When using both TWIM and TWIS on the same pins, the TWALM cannot be used.

10.3.13 TWIS

TWIS Version Register reads zero
TWIS Version Register (VR) reads zero instead of 0x112.

Fix/Workaround
None.

10.3.14 MCI

The busy signal of the responses R1b is not taken in account for CMD12 STOP_TRANSFER
It is not possible to know the busy status of the card during the response (R1b) for the commands CMD12.
Fix/Workaround
The card busy line should be polled through the GPIO Input Value register (IVR) for commands CMD12.

10.3.15 SSC

Frame Synchro and Frame Synchro Data are delayed by one clock cycle
The frame synchro and the frame synchro data are delayed from 1 SSC_CLOCK when:
- Clock is CKDIV
- The START is selected on either a frame synchro edge or a level
- Frame synchro data is enabled
- Transmit clock is gated on output (through CKO field)

Fix/Workaround
Transmit or receive CLOCK must not be gated (by the mean of CKO field) when START condition is performed on a generated frame synchro.

10.3.16 FLASHC

Corrupted read in flash may happen after fuses write or erase operations (FLASHC LP, UP, WGPB, EGPB, SSB, PGPFB, EAGPF commands)
After a flash fuse write or erase operation (FLASHC LP, UP, WGPB, EGPB, SSB, PGPFB, EAGPF commands), reading (data read or code fetch) in flash may fail. This may lead to an exception or to other errors derived from this corrupted read access.
Fix/Workaround
Before the flash fuse write or erase operation, enable the flash high speed mode (FLASHC HSEN command). The flash fuse write or erase operations (FLASHC LP, UP, WGPB, EGPB, SSB, PGPFB, EAGPF commands) must be issued from RAM or through the EBI. After these commands, read 3 times one flash page initialized to 00h. Disable the flash high speed mode (FLASHC HSDIS command). It is then possible to safely read or code fetch the flash.

11. Datasheet Revision History

Please note that the referring page numbers in this section are referred to this document. The referring revision in this section are referring to the document revision.

11.1 Rev. H– 10/12

1. Updated max frequency
2. Added Flash Read High Speed Mode description in FLASHC chapter
3. Updated Electrical Characteristics accordingly to new max frequency
4. Fixed wrong description of PLLOPT[0] in PM chapter
5. Updated Errata section according to new maximum frequency
6. Added USB hi-speed PLL electrical characteristics
7 Added OSC32 Errata in Power Management sections for Rev D,E and H

11.2 Rev. G– 11/11

1. Add recommandation for MCI connection with more than 1 slot

11.3 Rev. F – 08/11

1. Final version

11.4 Rev. E – 06/11

1. Updated Errata for E and D
2. Updated FLASHC chapter with HSEN and HSDIS commands

11.5 Rev. D – 04/11

1. Updated Errata for revision H and E
2. Updated Reset Sequence
3. Updated Peripherals' current consumption and others minor electrical charateristics
4. Updated Peripherals chapters

11.6 Rev. C – 03/10

1. Updated the datasheet with new revision H features.

11.7 Rev. B – 08/09

1. Updated the datasheet with new device AT32UC3A4.

11.8 Rev. A – 03/09

1. Initial revision.

1 Description 3

2 Overview 4

2.1 Block Diagram 4

2.2 Configuration Summary 5

3 Package and Pinout 6

3.1 Package 6

3.2 Peripheral Multiplexing on I/O lines 9

3.3 Signal Descriptions 14

3.4 I/O Line Considerations 19

3.5 Power Considerations 20

4 Processor and Architecture 21

4.1 Features 21

4.2 AVR32 Architecture 21

4.3 The AVR32UC CPU 22

4.4 Programming Model 26

4.5 Exceptions and Interrupts 30

5 Memories 34

5.1 Embedded Memories 34

5.2 Physical Memory Map 34

5.3 Peripheral Address Map 35

5.4 CPU Local Bus Mapping 37

6 Boot Sequence 39

6.1 Starting of Clocks 39

6.2 Fetching of Initial Instructions 39

7 Electrical Characteristics 40

7.1 Absolute Maximum Ratings* 40

7.2 DC Characteristics 41

7.3 I/O pin Characteristics 42

7.4 Regulator characteristics 43

7.5 Analog characteristics 44

7.6 Power Consumption 48

7.7 System Clock Characteristics 51

7.8 Oscillator Characteristics 52

7.9 ADC Characteristics 54

7.10 USB Transceiver Characteristics 55
7.11 EBI Timings 57
7.12 JTAG Characteristics 63
7.13 SPI Characteristics 64
7.14 MCI 66
7.15 Flash Memory Characteristics 67

8 Mechanical Characteristics 68

8.1 Thermal Considerations 68
8.2 Package Drawings 69
8.3 Soldering Profile 72

9 Ordering Information 73

10 Errata 74

10.1 Rev. H 74
10.2 Rev. E 78
10.3 Rev. D 84

11 Datasheet Revision History 90

11.1 Rev. H– 10/12 90
11.2 Rev. G– 11/11 90
11.3 Rev. F – 08/11 90
11.4 Rev. E – 06/11 90
11.5 Rev. D – 04/11 90
11.6 Rev. C – 03/10 90
11.7 Rev. B – 08/09 91
11.8 Rev. A – 03/09 91

Atmel Corporation
2325 Orchard Parkway
San Jose, CA 95131
USA
Tel: (+1)(408) 441-0311
Fax: (+1)(408) 487-2600
www.atmel.com

Atmel Asia Limited
Unit 1-5 & 16, 19/F
BEA Tower, Millennium City 5
418 Kwun Tong Road
Kwun Tong, Kowloon
HONG KONG
Tel: (+852) 2245-6100
Fax: (+852) 2722-1369

Atmel Munich GmbH
Business Campus
Parkring 4
D-85748 Garching b. Munich
GERMANY
Tel: (+49) 89-31970-0
Fax: (+49) 89-3194621

Atmel Japan
16F, Shin Osaki Kangyo Bldg.
1-6-4 Osaka Shinagawa-ku
Tokyo 104-0032
JAPAN
Tel: (+81) 3-6417-0300
Fax: (+81) 3-6417-0370

© 2012 Atmel Corporation. All rights reserved.

Atmel®, Atmel logo and combinations thereof AVR®, Qtouch®, and others are registered trademarks or trademarks of Atmel Corporation or its subsidiaries. Other terms and product names may be trademarks of others.

Disclaimer: The information in this document is provided in connection with Atmel products. No license, express or implied, by estoppel or otherwise, to any intellectual property right is granted by this document or in connection with the sale of Atmel products. **EXCEPT AS SET FORTH IN THE ATMEL TERMS AND CONDITIONS OF SALES LOCATED ON THE ATMEL WEBSITE, ATMEL ASSUMES NO LIABILITY WHATSOEVER AND DISCLAIMS ANY EXPRESS, IMPLIED OR STATUTORY WARRANTY RELATING TO ITS PRODUCTS INCLUDING, BUT NOT LIMITED TO, THE IMPLIED WARRANTY OF MERCHANTABILITY, FITNESS FOR A PARTICULAR PURPOSE, OR NON-INFRINGEMENT. IN NO EVENT SHALL ATMEL BE LIABLE FOR ANY DIRECT, INDIRECT, CONSEQUENTIAL, PUNITIVE, SPECIAL OR INCIDENTAL DAMAGES (INCLUDING, WITHOUT LIMITATION, DAMAGES FOR LOSS AND PROFITS, BUSINESS INTERRUPTION, OR LOSS OF INFORMATION) ARISING OUT OF THE USE OR INABILITY TO USE THIS DOCUMENT, EVEN IF ATMEL HAS BEEN ADVISED OF THE POSSIBILITY OF SUCH DAMAGES.** Atmel makes no representations or warranties with respect to the accuracy or completeness of the contents of this document and reserves the right to make changes to specifications and product descriptions at any time without notice. Atmel does not make any commitment to update the information contained herein. Unless specifically provided otherwise, Atmel products are not suitable for, and shall not be used in, automotive applications. Atmel products are not intended, authorized, or warranted for use as components in applications intended to support or sustain life.

Компания «ЭлектроПласт» предлагает заключение долгосрочных отношений при поставках импортных электронных компонентов на взаимовыгодных условиях!

Наши преимущества:

- Оперативные поставки широкого спектра электронных компонентов отечественного и импортного производства напрямую от производителей и с крупнейших мировых складов;
- Поставка более 17-ти миллионов наименований электронных компонентов;
- Поставка сложных, дефицитных, либо снятых с производства позиций;
- Оперативные сроки поставки под заказ (от 5 рабочих дней);
- Экспресс доставка в любую точку России;
- Техническая поддержка проекта, помощь в подборе аналогов, поставка прототипов;
- Система менеджмента качества сертифицирована по Международному стандарту ISO 9001;
- Лицензия ФСБ на осуществление работ с использованием сведений, составляющих государственную тайну;
- Поставка специализированных компонентов (Xilinx, Altera, Analog Devices, Intersil, Interpoint, Microsemi, Aeroflex, Peregrine, Syfer, Eurofarad, Texas Instrument, Miteq, Cobham, E2V, MA-COM, Hittite, Mini-Circuits,General Dynamics и др.);

Помимо этого, одним из направлений компании «ЭлектроПласт» является направление «Источники питания». Мы предлагаем Вам помощь Конструкторского отдела:

- Подбор оптимального решения, техническое обоснование при выборе компонента;
- Подбор аналогов;
- Консультации по применению компонента;
- Поставка образцов и прототипов;
- Техническая поддержка проекта;
- Защита от снятия компонента с производства.

Как с нами связаться

Телефон: 8 (812) 309 58 32 (многоканальный)
Факс: 8 (812) 320-02-42
Электронная почта: org@eplast1.ru
Адрес: 198099, г. Санкт-Петербург, ул. Калинина, дом 2, корпус 4, литера А.