DECEMBER 1972 – REVISED MARCH 1988

FUNCTION TABLE

INPUTS			OUTPUTS	
Σ OF H's AT A THRU H	EVEN	ODD	Σ EVEN	Σ ODD
EVEN	H	L	H	L
ODD	H	L	L	H
EVEN	L	H	L	H
ODD	L	H	H	L
X	H	H	L	L
X	L	L	H	H

H = high level, L = low level, X = irrelevant

SN54180 . . . J OR W PACKAGE
SN74180 . . . N PACKAGE
(TOP VIEW)

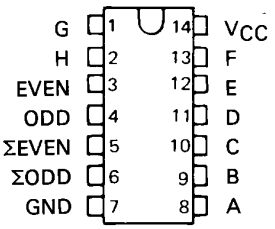

description

These universal, monolithic, 9-bit (8 data bits plus 1 parity bit) parity generators/checkers, utilize familiar Series 54/74 TTL circuitry and feature odd/even outputs and control inputs to facilitate operation in either odd or even-parity applications. Depending on whether even or odd parity is being generated or checked, the even or odd inputs can be utilized as the parity or 9th-bit input. The word-length capability is easily expanded by cascading.

The SN54180/SN74180 are fully compatible with other TTL or DTL circuits. Input buffers are provided so that each data input represents only one normalized series 54/74 load. A full fan-out to 10 normalized series 54/74 loads is available from each of the outputs at a low logic level. A fan-out to 20 normalized loads is provided at a high logic level to facilitate the connection of unused inputs to used inputs. Typical power dissipation is 170 mW.

The SN54180 is characterized for operation over the full military temperature range of –55°C to 125°C; and the SN74180 is characterized for operation from 0°C to 70°C.

absolute maximum ratings over operating free-air temperature range (unless otherwise noted)

Supply voltage, V_{CC} (see Note 1) . . . . . 7 V
Input voltage . . . . . 5.5 V
Operating free-air temperature range: SN54180 Circuits . . . . . –55°C to 125°C
SN74180 Circuits . . . . . 0°C to 70°C
Storage temperature range . . . . . –65°C to 150°C

NOTE 1: Voltage values are with respect to network ground terminal.

recommended operating conditions

	SN54180			SN74180			UNIT
	MIN	NOM	MAX	MIN	NOM	MAX	
Supply voltage, V_{CC}	4.5	5	5.5	4.75	5	5.25	V
High-level output current, I_{OH}			–800			–800	μA
Low-level output current, I_{OL}			16			16	mA
Operating free-air temperature, T_A	–55		125	0		70	°C

PRODUCTION DATA documents contain information current as of publication date. Products conform to specifications per the terms of Texas Instruments standard warranty. Production processing does not necessarily include testing of all parameters.

electrical characteristics over recommended operating free-air temperature range (unless otherwise noted)

PARAMETER			TEST CONDITIONS†	SN54180 MIN	SN54180 TYP‡	SN54180 MAX	SN74180 MIN	SN74180 TYP‡	SN74180 MAX	UNIT
V_{IH}	High-level input voltage			2			2			V
V_{IL}	Low-level input voltage					0.8			0.8	V
V_{IK}	Input clamp voltage		V_{CC} = MIN, I_I = −12 mA			−1.5			−1.5	V
V_{OH}	High-level output voltage		V_{CC} = MIN, V_{IH} = 2 V, V_{IL} = 0.8 V, I_{OH} = −800 μA	2.4	3.3		2.4	3.3		V
V_{OL}	Low-level output voltage		V_{CC} = MIN, V_{IH} = 2 V, V_{IL} = 0.8 V, I_{OL} = 16 mA		0.2	0.4		0.2	0.4	V
I_I	Input current at maximum input voltage		V_{CC} = MAX, V_I = 5.5 V			1			1	mA
I_{IH}	High-level input current	Any data input	V_{CC} = MAX, V_I = 2.4 V			40			40	μA
		Even or odd input				80			80	
I_{IL}	Low-level input current	Any data input	V_{CC} = MAX, V_I = 0.4 V			−1.6			−1.6	mA
		Even or odd input				−3.2			−3.2	
I_{OS}	Short-circuit output current§		V_{CC} = MAX	−20		−55	−18		−55	mA
I_{CC}	Supply current		V_{CC} = MAX, See Note 2		34	49		34	56	mA

NOTE 2: I_{CC} is measured with even and odd inputs at 4.5 V, all other inputs and outputs open.
†For conditions shown as MIN or MAX, use the appropriate value specified under recommended operating conditions for the applicable type.
‡All typical values are at V_{CC} = 5 V, T_A = 25°C.
§Not more than one output should be shorted at a time.

switching characteristics, V_{CC} = 5 V, T_A = 25°C

PARAMETER¶	FROM (INPUT)	TO (OUTPUT)	TEST CONDITIONS	MIN	TYP	MAX	UNIT
t_{PLH}	Data	Σ Even	C_L = 15 pF, R_L = 400 Ω, Odd input grounded, See Note 3		40	60	ns
t_{PHL}					45	68	
t_{PLH}	Data	Σ Odd			32	48	ns
t_{PHL}					25	38	
t_{PLH}	Data	Σ Even	C_L = 15 pF, R_L = 400 Ω, Even input grounded, See Note 3		32	48	ns
t_{PHL}					25	38	
t_{PLH}	Data	Σ Odd			40	60	ns
t_{PHL}					45	68	
t_{PLH}	Even or Odd	Σ Even or Σ Odd	C_L = 15 pF, R_L = 400 Ω, See Note 3		13	20	ns
t_{PHL}					7	10	

NOTE 3: Load circuits and voltage waveforms are shown in Section 1.

logic symbol†

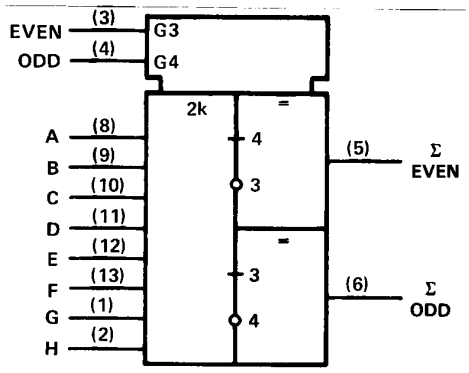

†This symbol is in accordance with ANSI/IEEE Std 91-1984 and IEC Publication 617-12.

schematics of inputs and outputs

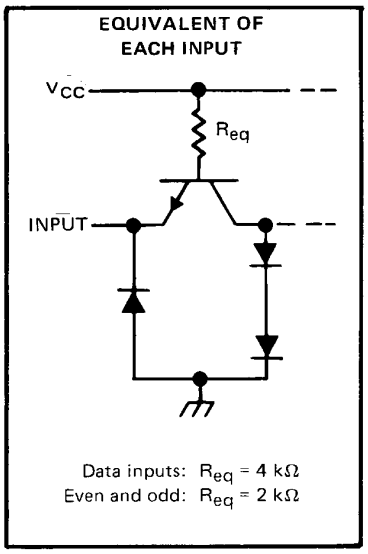

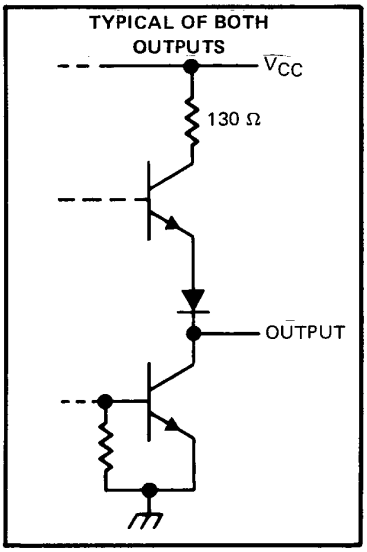

logic diagram (positive logic)

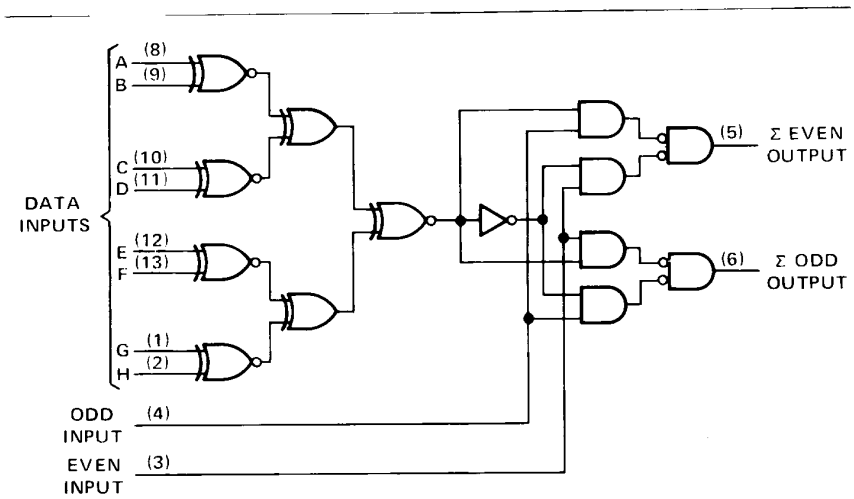

IMPORTANT NOTICE

Texas Instruments and its subsidiaries (TI) reserve the right to make changes to their products or to discontinue any product or service without notice, and advise customers to obtain the latest version of relevant information to verify, before placing orders, that information being relied on is current and complete. All products are sold subject to the terms and conditions of sale supplied at the time of order acknowledgement, including those pertaining to warranty, patent infringement, and limitation of liability.

TI warrants performance of its semiconductor products to the specifications applicable at the time of sale in accordance with TI's standard warranty. Testing and other quality control techniques are utilized to the extent TI deems necessary to support this warranty. Specific testing of all parameters of each device is not necessarily performed, except those mandated by government requirements.

CERTAIN APPLICATIONS USING SEMICONDUCTOR PRODUCTS MAY INVOLVE POTENTIAL RISKS OF DEATH, PERSONAL INJURY, OR SEVERE PROPERTY OR ENVIRONMENTAL DAMAGE ("CRITICAL APPLICATIONS"). TI SEMICONDUCTOR PRODUCTS ARE NOT DESIGNED, AUTHORIZED, OR WARRANTED TO BE SUITABLE FOR USE IN LIFE-SUPPORT DEVICES OR SYSTEMS OR OTHER CRITICAL APPLICATIONS. INCLUSION OF TI PRODUCTS IN SUCH APPLICATIONS IS UNDERSTOOD TO BE FULLY AT THE CUSTOMER'S RISK.

In order to minimize risks associated with the customer's applications, adequate design and operating safeguards must be provided by the customer to minimize inherent or procedural hazards.

TI assumes no liability for applications assistance or customer product design. TI does not warrant or represent that any license, either express or implied, is granted under any patent right, copyright, mask work right, or other intellectual property right of TI covering or relating to any combination, machine, or process in which such semiconductor products or services might be or are used. TI's publication of information regarding any third party's products or services does not constitute TI's approval, warranty or endorsement thereof.

Copyright © 1998, Texas Instruments Incorporated

Компания «ЭлектроПласт» предлагает заключение долгосрочных отношений при поставках импортных электронных компонентов на взаимовыгодных условиях!

Наши преимущества:

- Оперативные поставки широкого спектра электронных компонентов отечественного и импортного производства напрямую от производителей и с крупнейших мировых складов;
- Поставка более 17-ти миллионов наименований электронных компонентов;
- Поставка сложных, дефицитных, либо снятых с производства позиций;
- Оперативные сроки поставки под заказ (от 5 рабочих дней);
- Экспресс доставка в любую точку России;
- Техническая поддержка проекта, помощь в подборе аналогов, поставка прототипов;
- Система менеджмента качества сертифицирована по Международному стандарту ISO 9001;
- Лицензия ФСБ на осуществление работ с использованием сведений, составляющих государственную тайну;
- Поставка специализированных компонентов (Xilinx, Altera, Analog Devices, Intersil, Interpoint, Microsemi, Aeroflex, Peregrine, Syfer, Eurofarad, Texas Instrument, Miteq, Cobham, E2V, MA-COM, Hittite, Mini-Circuits,General Dynamics и др.);

Помимо этого, одним из направлений компании «ЭлектроПласт» является направление «Источники питания». Мы предлагаем Вам помощь Конструкторского отдела:

- Подбор оптимального решения, техническое обоснование при выборе компонента;
- Подбор аналогов;
- Консультации по применению компонента;
- Поставка образцов и прототипов;
- Техническая поддержка проекта;
- Защита от снятия компонента с производства.

Как с нами связаться

Телефон: 8 (812) 309 58 32 (многоканальный)
Факс: 8 (812) 320-02-42
Электронная почта: org@eplast1.ru
Адрес: 198099, г. Санкт-Петербург, ул. Калинина, дом 2, корпус 4, литера А.