Pulse
A TECHNITROL COMPANY

Wire-Wound - 0402, 0603, 0805, 1008, 1206

RF Chip Inductors

RoHS COMPLIANT

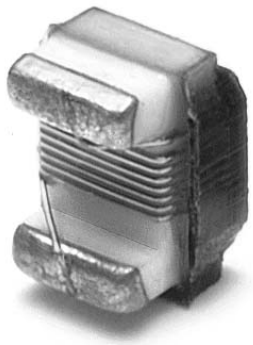

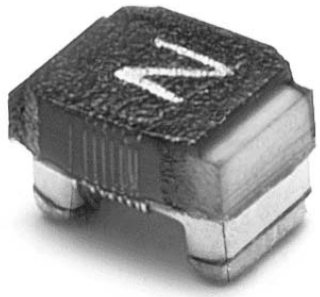

WC701.L (4/10)

WIRE-WOUND RF CHIP INDUCTORS

Pulse is one of the largest magnetic component design and manufacturing companies in the world. With over 19,000 employees worldwide and an extensive line of state-of-the-art magnetic solutions, Pulse has become a leading supplier of magnetic components to OEMs and Contract Manufacturers in data networking, connectivity, digital telecommunications including wireless communications, broadband/Internet, cable modems and most forms of power conversion. In addition, Pulse designs and manufactures end-user products such as DSL filters and splitters (Excelsus® products), as well as components used in consumer products such as personal computers, cable modems, TVs, DVDs, PDAs, digital cameras, and set-top boxes.

Engineering design centers and manufacturing facilities in North America, Europe and Asia supply product to a broad international customer base. Sales and service operations in the United States, Canada, United Kingdom, France, Italy, Singapore, Hong Kong and Taiwan, as well as authorized distributors and representatives worldwide, support Pulse customers around the globe. The company offers a complete line of magnetic components and modules for use in T1 telecommunications, Internet/broadband access, VoIP, DSL, Ethernet data networking up to one Gigabit, AC-DC, DC-DC and UPS power conversion and communication, and power conversion for military/aerospace applications. This extensive catalog of standard products is available through distributors worldwide.

With the acquisition of Eldor (Italy) in 2003, Pulse is now a leading worldwide supplier of magnetics for consumer applications, offering a wide range of product platforms including flyback transformers (FBTs), power switch-mode transformers (SMTs) and other inductive components for TV, DVD, set-top boxes and LCD TV monitors. Pulse has the industry's widest range of inductive solutions to designers and producers in the emerging digital consumer products markets.

Pulse has a wide range of capabilities to support customers. Real-time programs track current product development, vendor delivery and production status. They also schedule available delivery dates and support product delivery programs such as vendor-managed inventory, consignment and EDI ordering.

Pulse is proactive in developing industry standard products to ensure that its customers receive high-performance, high-quality and high-reliability products. Pulse is a member of and actively participates in IEEE, ANSI, T1/E1 and the DSL Forum. As an example, Pulse is a team member of the standards committee developing DSL products that allow broadband connectivity via household telephone lines.

Ongoing research and development at Pulse has resulted in multiple product patents along with several unique manufacturing processes. Likewise, Engineering design centers around the world can provide custom designs for applications not generally available in the current, Pulse catalog product lines.

Pulse works closely with the major semiconductor manufacturers (that provide the ICs controlling computer networks, DSL and telecommunications and power conversion electronics) to develop standard magnetic components that exactly match the magnetic requirements of the IC. These semiconductor companies recommend Pulse magnetics on their datasheets. Committed to delivering high-performance products, advanced technologies, and world-class quality, Pulse supports the electronics industry and end-user with competitively priced products and services.

The 0402 to 1206 series of Miniature RF Inductors all contain wirewound technology and ceramic or ferrite cores, thus providing the ultimate performance demanded by today's RF applications. Inductors feature high Qs and SRFs and an industry standard size and footprint. Tighter inductance tolerances are available. CD, CM, CQ, and FT Series inductors are available in Tin or Gold terminations. Sample kits are available from Pulse for all series. Please refer to page 2 for part numbers. Use the Product Finder on the Pulse web site: **http://www.pulseeng.com/Products**

WIRE-WOUND RF CHIP INDUCTORS

The 0402 to 1206 series range of Miniature Chip Inductors contains the very latest in wire-wound technology and Ceramic or Ferrite Core, thus providing the ultimate in performance demanded by today's Wireless products. The Inductors provide high Q and SRFs in an industry standard size and footprint. Pulse chip inductors manufactured after February, 2005 are in compliance with RoHS requirements.

TABLE of CONTENTS

Part Number Legend & Design Kits Available 2

Selection Guide 3

Performance Specifications

- **Environmental Testing** 4
- **Mechanical Testing** 4-5
- **Tape and Reel Specification** 5

Miniature Wire-wound RF Chip Inductors

- **0402CD Series** 6-7
- **0603CD Series** 8-9
- **0805CD Series** 10-11
- **0805CM Series** 12-13
- **0805FT Series** 14-15
- **1008CD Series** 16-17
- **1008CM Series** 18-19
- **1008CQ Series** 20-21
- **1206CD Series** 22-23

Application Notes 24-27

WIRE-WOUND
RF CHIP INDUCTORS

Part Number Legend

PE — 0805 CD 121 K T T

PACKAGE STYLE
(0402, 0603, 0805, 1008, or 1206)

CORE MATERIAL
C = Ceramic (Alumina) | **CQ** = High Q
CD = Standard range | **F** = Ferrite
CM = Alternative performance/inductance to CD

INDUCTANCE (nH)
Representative of the inductance value

TOLERANCE
F = ±1% **K** = ±10%
G = ±2% **B** = ± 0.2nH
J = ±5% **S** = ± 0.3nH

PACKAGING (T = Tape & Reel: 7″ or 13″ reel)

Size	0402	0603	0805	1008	1206
Pcs/Reel	3000	2000	2000	1600	3000

TERMINATION *(Lead Free Compatible)*
T = Gold or Tin plating (Gold plating is priority)
G = Gold plating only
S = Tin plating only

Design Kits Available from Pulse

Product KIT Series	Kit Part Number	Tolerance
0402CD Series	PE-0402CDKIT-T	2%
0603CD Series	PE-0603CDKIT-T	2%
0805CD Series	PE-0805CDKIT-T	2%
1008CD Series	PE-1008CDKIT-T	2%

NOTE: 0805CM, 1008CM and 1008CQ design kits are not available at this time.

WIRE-WOUND RF CHIP INDUCTORS
Selection Guides

Pulse
A TECHNITROL COMPANY

Electrical Specifications

Part Number	Size	Construction	Inductance (nH)
0402CD	0402	Wirewound	1.0 to 120
0603CD	0603	Wirewound	1.6 to 390
0805CD	0805	Wirewound	2.8 to 1500
0805CM	0805	Wirewound	3.3 to 820
0805FT	0805	Wirewound	1000 to 68000
1008CD	1008	Wirewound	9.7 to 8200
1008CM	1008	Wirewound	10 to 4700
1008CQ	1008	Wirewound	4.1 to 390
1206CD	1206	Wirewound	3.3 to 1200

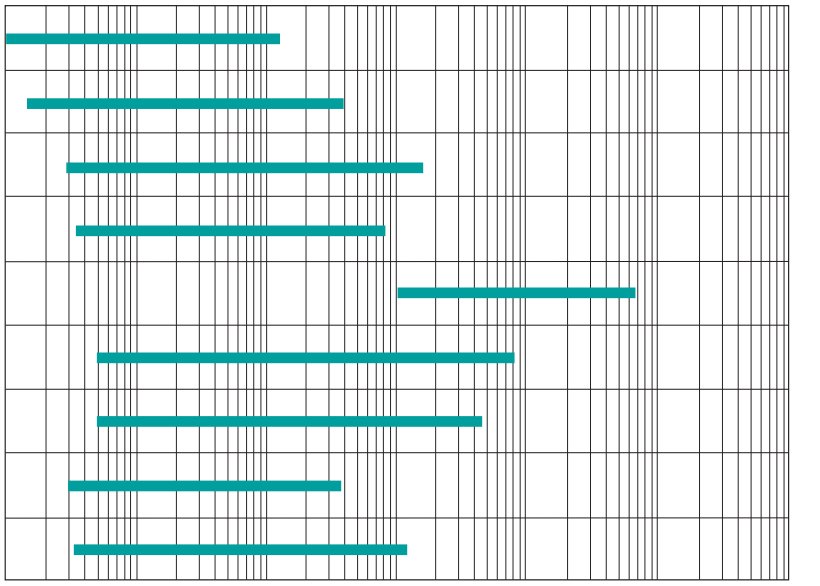

CD Series: Standard 100% compatible with other market leaders.
CM Series: Offers improved electrical performance or alternative inductance values to Pulse CD series.
CQ Series: Offers high Q and high Idc series.
FT Series: Ferrite core offers higher inductance values.

Competition Cross Reference

		Pulse Wire-wound Inductors						
Type	**Competition**	**0402CD**	**0603CD**	**0805CD**	**0805FT**	**1008CQ**	**1008CD**	**1206CD**
Wire Wound	Coilcraft	0402CS	0603CS	0805CS/ HS/HT		1008HQ	1008CS/ HT/CT	1206CS
	Murata			LQW1608A			LQN21A	
	Taiyo Yuden			LB2012T			LEM_2520T	
	TDK				NL2016		NLH2520	

WIRE-WOUND RF CHIP INDUCTORS

Performance Specifications

Pulse
A TECHNITROL COMPANY

Environmental Testing

Storage and Operating Temperature Range: **-40 to +125°C**	Inductors are subjected to the extremes for 48 hours. Then tested at 25°C	There shall be no deformation or change in appearance Inductance shall not change by more than ±5% Q values shall not change by more than ±10%
Thermal Shock: **-40 to +85°C**	Inductors are subjected to 30 cycles for 30 minutes at each extreme. Then tested at 25°C	
Moisture Resistance	Inductors are subjected to 10 cycles of 24 hours at 70°C with 90 to 95% Relative Humidity Then tested at 25°C	
Operating Life	Inductors are subjected to 1000 hours at 85°C with 85% Relative Humidity with the rated current applied	There shall be no Damaged, Open or Shorted Windings

Mechanical Testing

Temperature Range:	Inductors are subjected to the following: Use a solder pot at 260°C, with RMA Flux. Each termination is immersed in 63Sn/37Pb molten solder for 4 to 6 seconds.	There shall be no deformation or change in appearance Inductance shall not change by more than ±5% Q values shall not change by more than ±10%
Recommended Solder Heat Resistance Profile	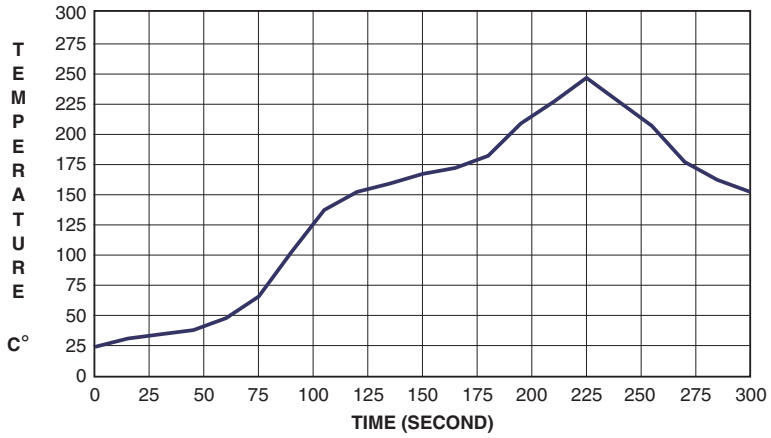	

WIRE-WOUND RF CHIP INDUCTORS
Performance Specifications

Mechanical Testing		
Vibration (Random)	Samplers are subjected to random vibration as per NAVMAT P9492	There shall be no deformation or change in appearance Inductance shall not change by more than ±5% Q values shall not change by more than ±10%
Mechanical Shock	Inductors are subjected to one half sine wave pulse (8700 g's for 0.3 ms) in each directional axis for a total of 18 shocks	
Moisture Resistance	Reflow Inductors on to test pads using 63 Sn/37 Pb solder paste (IR Reflow profile = 200°C for 30 seconds or peak 235°C for 20 seconds)	The inductors shall withstand a minimum force of 1000 g's in any direction using a dynamometer force guage.

Tape and Reel Specifications

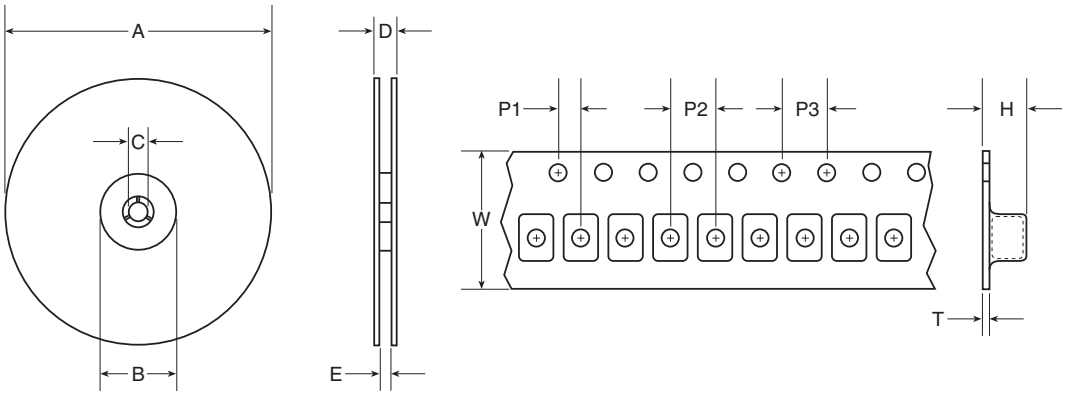

Packaging Specifications												
Series	**Parts per Reel**	**Reel Dimensions (mm)**					**Tape Dimensions (mm)**					
		A	**B**	**C**	**D**	**E**	**W**	**P1**	**P2**	**P3**	**H**	**T**
0402CD	3000	178	50	13	14.4	8.4	8	2	4	4	1.1	0.3
0603CD	2000	178	50	13	14.4	8.4	8	2	4	4	1.7	0.3
0805CD	2000	178	50	13	14.4	8.4	8	2	4	4	2.1	0.3
0805CM	2000	178	50	13	14.4	8.4	8	2	4	4	2.1	0.3
0805FT	2000	178	50	13	14.4	8.4	8	2	4	4	2.1	0.3
1008CD	1600	178	50	13	14.4	8.4	8	2	4	4	2.6	0.3
1008CM	1600	178	50	13	14.4	8.4	8	2	4	4	2.6	0.3
1008CQ	1600	178	50	13	14.4	8.4	8	2	4	4	2.6	0.3
1206CD	3000	330	101	13	18.4	12.4	12	2	4	4	2.0	0.4

NOTE: P1, P2 and P3 are same for all chip inductor series. Keeping the same dimensions for guide hole and pocket pitch (P1), pocket pitch (P2), guide hole pitch (P3) and tape width (8mm) for all series, enables the packaging machine to maintain the same settings while changing models. The only difference between the series are the parts per reel which contribute to a different length of tapes/reel per model.

WIRE-WOUND RF CHIP INDUCTORS - 0402CD SERIES

- Wirewound ceramic core construction
- High Q values
- High self resonant frequency
- Industry standard 0402 (1005) surface mount land pattern

See page 3 for Competition Cross Reference

Electrical Specifications @ 25°C

Part Number	Inductance 1 (nH)	Standard Tolerance	Optional Tolerance	Q 2 (MIN)	SRF 3 (MHz MIN)	R_{DC} (Ω MAX)	I_{DC} (mA MAX)
PE-0402CD1N0KTT	1.0 @ 250MHz	±0.3nH (S)	±0.2nH (B)	13 @ 250MHz	6000	0.045	1360
PE-0402CD1N2KTT	1.2 @ 250MHz	±10% (K)	±5% (J), ±2% (G)	13 @ 250MHz	6000	0.060	1300
PE-0402CD1N8KTT	1.8 @ 250MHz	±10% (K)	±5% (J), ±2% (G)	16 @ 250MHz	6000	0.070	1040
PE-0402CD1N9KTT	1.9 @ 250MHz	±10% (K)	±5% (J), ±2% (G)	16 @ 250MHz	6000	0.070	1040
PE-0402CD2N0KTT	2.0 @ 250MHz	±10% (K)	±5% (J), ±2% (G)	16 @ 250MHz	6000	0.070	1040
PE-0402CD2N2KTT	2.2 @ 250 MHz	±10% (K)	±5% (J), ±2% (G)	18 @ 250MHz	6000	0.070	960
PE-0402CD2N4KTT	2.4 @ 250MHz	±10% (K)	±5% (J), ±2% (G)	18 @ 250MHz	6000	0.068	900
PE-0402CD2N7KTT	2.7 @ 250MHz	±10% (K)	±5% (J)	18 @ 250MHz	6000	0.120	860
PE-0402CD3N3KTT	3.3 @ 250MHz	±10% (K)	±5% (J), ±2% (G)	20 @ 250MHz	6000	0.066	840
PE-0402CD3N6KTT	3.6 @ 250MHz	±10% (K)	±5% (J), ±2% (G)	20 @ 250MHz	6000	0.066	840
PE-0402CD3N9KTT	3.9 @ 250MHz	±10% (K)	±5% (J), ±2% (G)	20 @ 250MHz	5800	0.066	840
PE-0402CD4N3KTT	4.3 @ 250MHz	±10% (K)	±5% (J), ±2% (G)	20 @ 250MHz	5800	0.091	640
PE-0402CD4N7KTT	4.7 @ 250MHz	±10% (K)	±5% (J), ±2% (G)	20 @ 250MHz	4775	0.130	640
PE-0402CD5N1KTT	5.1 @ 250MHz	±10% (K)	±5% (J), ±2% (G)	23 @ 250MHz	5800	0.083	800
PE-0402CD5N6KTT	5.6 @ 250MHz	±10% (K)	±5% (J), ±2% (G)	23 @ 250MHz	5800	0.083	760
PE-0402CD6N2KTT	6.2 @ 250MHz	±10% (K)	±5% (J), ±2% (G)	23 @ 250MHz	5800	0.083	760
PE-0402CD6N8KTT	6.8 @ 250MHz	±10% (K)	±5% (J), ±2% (G)	20 @ 250MHz	5800	0.083	680
PE-0402CD7N5KTT	7.5 @ 250MHz	±10% (K)	±5% (J), ±2% (G)	25 @ 250MHz	5800	0.104	680
PE-0402CD8N2KTT	8.2 @ 250MHz	±10% (K)	±5% (J), ±2% (G)	25 @ 250MHz	4400	0.104	680
PE-0402CD8N7KTT	8.7 @ 250MHz	±10% (K)	±5% (J)	21 @ 250MHz	4100	0.200	680
PE-0402CD9N0KTT	9.0 @ 250MHz	±10% (K)	±5% (J), ±2% (G)	25 @ 250MHz	4160	0.104	680
PE-0402CD9N5KTT	9.5 @ 250MHz	±10% (K)	±5% (J), ±2% (G)	21 @ 250MHz	4000	0.200	600
PE-0402CD100KTT	10 @ 250MHz	±10% (K)	±5% (J), ±2% (G)	21 @ 250MHz	3900	0.195	480
PE-0402CD110KTT	11 @ 250MHz	±10% (K)	±5% (J), ±2% (G)	26 @ 250MHz	3680	0.120	640
PE-0402CD120KTT	12 @ 250MHz	±10% (K)	±5% (J), ±2% (G)	26 @ 250MHz	3600	0.120	640
PE-0402CD130KTT	13 @ 250MHz	±10% (K)	±5% (J), ±2% (G)	26 @ 250MHz	3450	0.210	600
PE-0402CD150KTT	15 @ 250MHz	±10% (K)	±5% (J), ±2% (G)	26 @ 250MHz	3280	0.172	560
PE-0402CD160KTT	16 @ 250MHz	±10% (K)	±5% (J), ±2% (G)	26 @ 250MHz	3100	0.220	560
PE-0402CD180KTT	18 @ 250MHz	±10% (K)	±5% (J), ±2% (G)	26 @ 250MHz	3100	0.230	520
PE-0402CD190KTT	19 @ 250MHz	±10% (K)	±5% (J), ±2% (G)	26 @ 250MHz	3040	0.202	480
PE-0402CD200KTT	20 @ 250MHz	±10% (K)	±5% (J), ±2% (G)	26 @ 250MHz	3000	0.250	480
PE-0402CD220KTT	22 @ 250MHz	±10% (K)	±5% (J), ±2% (G)	26 @ 250MHz	2800	0.300	400
PE-0402CD230KTT	23 @ 250MHz	±10% (K)	±5% (J), ±2% (G)	26 @ 250MHz	2720	0.214	400
PE-0402CD240KTT	24 @ 250MHz	±10% (K)	±5% (J)	26 @ 250MHz	2700	0.300	400
PE-0402CD270KTT	27 @ 250MHz	±10% (K)	±5% (J), ±2% (G)	26 @ 250MHz	2480	0.298	400

(Continued on next page)

WIRE-WOUND RF CHIP INDUCTORS - 0402CD SERIES

Pulse
A TECHNITROL COMPANY

Electrical Specifications @ 25°C *(continued)*

Part Number	Inductance 1 (nH)	Standard Tolerance	Optional Tolerance	Q 2 (MIN)	SRF 3 (MHz MIN)	R_{DC} (Ω MAX)	I_{DC} (mA MAX)
PE-0402CD300KTT	30 @ 250MHz	±10% (K)	±5% (J), ±2% (G)	25 @ 250MHz	2350	0.300	350
PE-0402CD330KTT	33 @ 250MHz	±10% (K)	±5% (J), ±2% (G)	24 @ 250MHz	2350	0.350	350
PE-0402CD360KTT	36 @ 250MHz	±10% (K)	±5% (J), ±2% (G)	26 @ 250MHz	2320	0.403	320
PE-0402CD390KTT	39 @ 250MHz	±10% (K)	±5% (J), ±2% (G)	25 @ 250MHz	2100	0.550	320
PE-0402CD400KTT	40 @ 250MHz	±10% (K)	±5% (J), ±2% (G)	26 @ 250MHz	2240	0.438	320
PE-0402CD430KTT	43 @ 250MHz	±10% (K)	±5% (J), ±2% (G)	25 @ 250MHz	2030	0.810	240
PE-0402CD470KTT	47 @ 250MHz	±10% (K)	±5% (J), ±2% (G)	20 @ 250MHz	2100	0.830	100
PE-0402CD510KTT	51 @ 250MHz	±10% (K)	±5% (J), ±2% (G)	25 @ 250MHz	1750	0.820	100
PE-0402CD560KTT	56 @ 250MHz	±10% (K)	±5% (J), ±2% (G)	22 @ 250MHz	1750	0.970	100
PE-0402CD680KTT	68 @ 250MHz	±10% (K)	±5% (J), ±2% (G)	18 @ 250MHz	1840	0.970	100
PE-0402CD820KTT	82 @ 250MHz	±10% (K)	±5% (J), ±2% (G)	16 @ 250MHz	1680	1.250	100
PE-0402CD101KTT	100 @ 250MHz	±10% (K)	±5% (J), ±2% (G)	16 @ 250MHz	1620	2.600	100
PE-0402CD121KTT	120 @ 250MHz	±10% (K)	±5% (J), ±2% (G)	14 @ 250MHz	1520	2.700	90

Notes:

1. Inductance measured using a HP4286A RF Impedance Analyzer. (Please note that inductance information is not stamped on part, because of the extremely small size).
2. Q measured using a HP4291A RF Impedance Analyzer with a HP16193A Test Fixture.
3. SRF measured using a HP8753C Network Analyzer.
4. R_{DC} measured using a Valhalla Scientific model 4100 ATC Digital Ohmmeter.
5. Based on a 15ºC maximum temperature rise.
6. Sample Kit Part Number: **PE-0402CDKIT-T**
7. Component Weight: 0.002 grams typical.

Typical Q vs Frequency

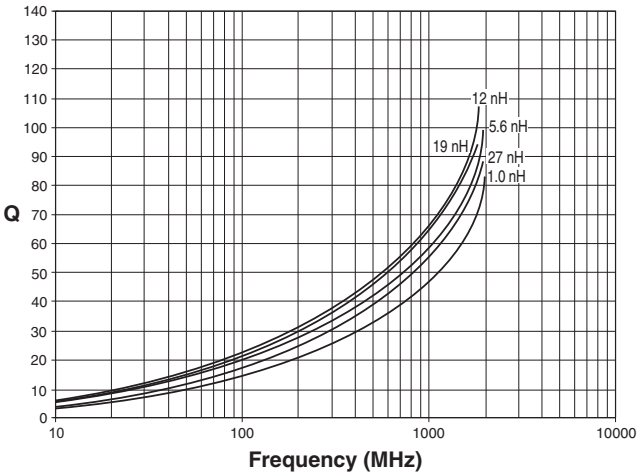

Typical Inductance vs Frequency

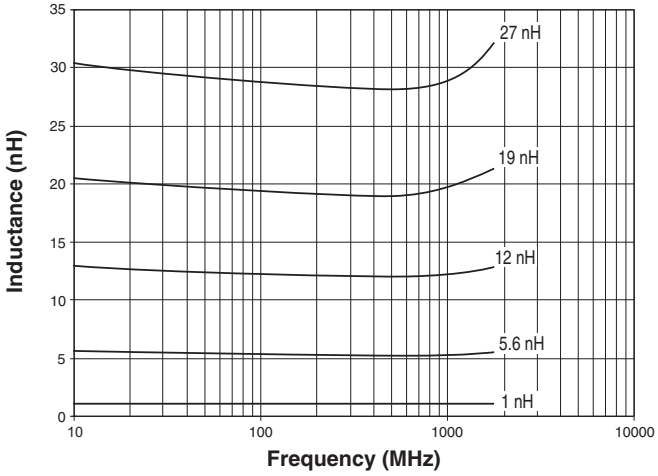

Mechanical

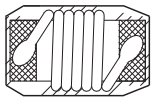

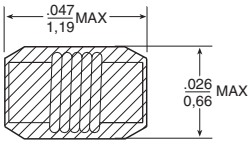

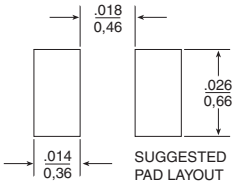

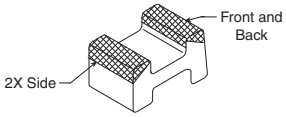

Pictorial view of core (for reference only)

Weight . . . . . 0.002 grams
Tape & Reel 3000/reel
Dimensions: Inches / mm

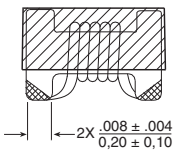

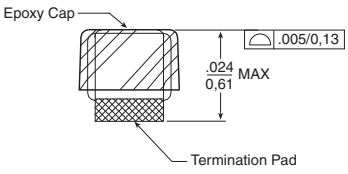

WIRE-WOUND RF CHIP INDUCTORS - 0603CD SERIES

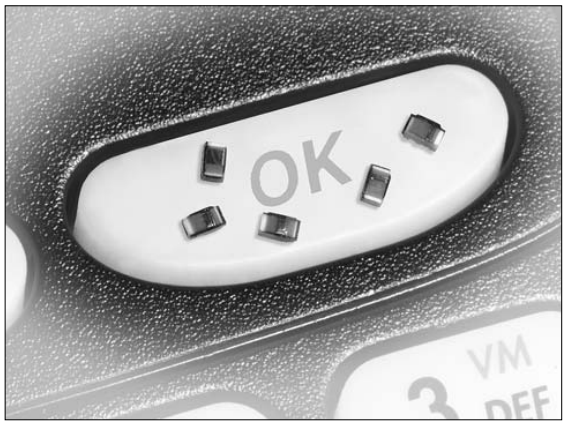

- Wirewound ceramic core construction
- High Q values
- High self resonant frequency
- Industry standard 0603 (1608) surface mount land pattern

See page 3 for Competition Cross Reference

Electrical Specifications @ 25°C

Part Number	Inductance [1] (nH)	Standard Tolerance	Optional Tolerance	Q [2] (MIN)	SRF [3] (MHz MIN)	RDC [4] (Ω MAX)	IDC [5] (mA MAX)
PE-0603CD1N6KTT	1.6 @ 250MHz	±10% (K)	±5% (J), ±2% (G)	24 @ 250MHz	>6000	0.030	700
PE-0603CD010KTT	1.7 @ 250MHz	±10% (K)	±5% (J), ±2% (G)	16 @ 250MHz	>6000	0.050	700
PE-0603CD1N8KTT	1.8 @ 250MHz	±10% (K)	±5% (J), ±2% (G)	16 @ 250MHz	>6000	0.045	700
PE-0603CD2N2KTT	2.2 @ 250MHz	±10% (K)	±5% (J), ±2% (G)	18 @ 250MHz	>6000	0.110	700
PE-0603CD3N3KTT	3.3 @ 250MHz	±10% (K)	±5% (J), ±2% (G)	35 @ 250MHz	>6000	0.045	700
PE-0603CD3N6KTT	3.6 @ 250MHz	±10% (K)	±5% (J), ±2% (G)	20 @ 250MHz	>6000	0.070	700
PE-0603CD030KTT	3.9 @ 250MHz	±10% (K)	±5% (J), ±2% (G)	20 @ 250MHz	>6000	0.080	700
PE-0603CD4N3KTT	4.3 @ 250MHz	±10% (K)	±5% (J), ±2% (G)	20 @ 250MHz	>6000	0.102	700
PE-0603CD040KTT	4.55 @ 250MHz	±10% (K)	±5% (J), ±2% (G)	20 @ 250MHz	5800	0.106	700
PE-0603CD4N7KTT	4.7 @ 250MHz	±10% (K)	±5% (J), ±2% (G)	20 @ 250MHz	5800	0.116	700
PE-0603CD5N1KTT	5.1 @ 250MHz	±10% (K)	±5% (J), ±2% (G)	20 @ 250MHz	5700	0.108	700
PE-0603CD5N6KTT	5.6 @ 250MHz	±10% (K)	±5% (J), ±2% (G)	25 @ 250MHz	5500	0.108	700
PE-0603CD6N2KTT	6.2 @ 250MHz	±10% (K)	±5% (J), ±2% (G)	25 @ 250MHz	5800	0.110	700
PE-0603CD060KTT	6.68 @ 250MHz	±10% (K)	±5% (J), ±2% (G)	25 @ 250MHz	5800	0.110	700
PE-0603CD6N8KTT	6.8 @ 250MHz	±10% (K)	±5% (J), ±2% (G)	27 @ 250MHz	5800	0.110	700
PE-0603CD7N5KTT	7.5 @ 250MHz	±10% (K)	±5% (J), ±2% (G)	28 @ 250MHz	4800	0.115	700
PE-0603CD080KTT	8.2 @ 250MHz	±10% (K)	±5% (J), ±2% (G)	30 @ 250MHz	4600	0.120	700
PE-0603CD8N7KTT	8.7 @ 250MHz	±10% (K)	±5% (J), ±2% (G)	28 @ 250MHz	4600	0.109	700
PE-0603CD9N5KTT	9.5 @ 250MHz	±10% (K)	±5% (J), ±2% (G)	28 @ 250MHz	5400	0.135	700
PE-0603CD100KTT	10 @ 250MHz	±10% (K)	±5% (J), ±2% (G)	30 @ 250MHz	4800	0.130	700
PE-0603CD110KTT	11 @ 250MHz	±10% (K)	±5% (J), ±2% (G)	30 @ 250MHz	4000	0.086	700
PE-0603CD120KTT	12 @ 250MHz	±10% (K)	±5% (J), ±2% (G)	30 @ 250MHz	4000	0.130	700
PE-0603CD130KTT	13 @ 250MHz	±10% (K)	±5% (J), ±2% (G)	38 @ 250MHz	3600	0.106	700
PE-0603CD150KTT	15 @ 250MHz	±10% (K)	±5% (J), ±2% (G)	30 @ 250MHz	4000	0.170	700
PE-0603CD160KTT	16 @ 250MHz	±10% (K)	±5% (J), ±2% (G)	35 @ 250MHz	3300	0.170	700
PE-0603CD180KTT	18 @ 250MHz	±10% (K)	±5% (J), ±2% (G)	35 @ 250MHz	3100	0.170	700
PE-0603CD220KTT	22 @ 250MHz	±10% (K)	±5% (J), ±2% (G)	35 @ 250MHz	3000	0.190	700
PE-0603CD230KTT	23 @ 250MHz	±10% (K)	±5% (J), ±2% (G)	38 @ 250MHz	2850	0.190	700
PE-0603CD240KTT	24 @ 250MHz	±10% (K)	±5% (J), ±2% (G)	35 @ 250MHz	2650	0.200	600
PE-0603CD270KTT	27 @ 250MHz	±10% (K)	±5% (J), ±2% (G)	35 @ 250MHz	2800	0.220	600
PE-0603CD300KTT	30 @ 250MHz	±10% (K)	±5% (J), ±2% (G)	37 @ 250MHz	2250	0.144	600
PE-0603CD330KTT	33 @ 250MHz	±10% (K)	±5% (J), ±2% (G)	35 @ 250MHz	2300	0.220	600
PE-0603CD360KTT	36 @ 250MHz	±10% (K)	±5% (J), ±2% (G)	37 @ 250MHz	2080	0.250	600
PE-0603CD390KTT	39 @ 250MHz	±10% (K)	±5% (J), ±2% (G)	35 @ 250MHz	2200	0.250	600
PE-0603CD430KTT	43 @ 250MHz	±10% (K)	±5% (J), ±2% (G)	35 @ 250MHz	2000	0.280	600
PE-0603CD470KTT	47 @ 200MHz	±10% (K)	±5% (J), ±2% (G)	35 @ 200MHz	2000	0.280	600
PE-0603CD510KTT	51 @ 200MHz	±10% (K)	±5% (J), ±2% (G)	35 @ 200MHz	1900	0.270	600
PE-0603CD560KTT	56 @ 200MHz	±10% (K)	±5% (J), ±2% (G)	35 @ 200MHz	1900	0.310	600
PE-0603CD680KTT	68 @ 200MHz	±10% (K)	±5% (J), ±2% (G)	35 @ 200MHz	1700	0.340	600
PE-0603CD720KTT	72 @ 150MHz	±10% (K)	±5% (J), ±2% (G)	34 @ 150MHz	1700	0.490	400

(Continued on next page)

WIRE-WOUND RF CHIP INDUCTORS - 0603CD SERIES

Pulse
A TECHNITROL COMPANY

Electrical Specifications @ 25°C *(continued)*

Part Number	Inductance [1] (nH)	Standard Tolerance	Optional Tolerance	Q [2] (MIN)	SRF [3] (MHz MIN)	R_{DC} [4] (Ω MAX)	I_{DC} [5] (mA MAX)
PE-0603CD820KTT	82 @ 150MHz	±10% (K)	±5% (J), ±2% (G)	34 @ 150MHz	1700	0.540	400
PE-0603CD101KTT	98.50 @ 150MHz	±10% (K)	±5% (J), ±2% (G)	34 @ 150MHz	1400	0.580	400
PE-0603CDR10KTT	100 @ 150MHz	±10% (K)	±5% (J), ±2% (G)	34 @ 150MHz	1400	0.580	400
PE-0603CD111KTT	110 @ 150MHz	±10% (K)	±5% (J), ±2% (G)	33 @ 150MHz	1300	0.610	300
PE-0603CDR12KTT	120 @ 150MHz	±10% (K)	±5% (J), ±2% (G)	32 @ 150MHz	1300	0.650	300
PE-0603CD121KTT	122 @ 150MHz	±10% (K)	±5% (J), ±2% (G)	33 @ 150MHz	1300	0.650	300
PE-0603CD151KTT	150 @ 150MHz	±10% (K)	±5% (J), ±2% (G)	28 @ 150MHz	990	0.920	280
PE-0603CD181KTT	180 @ 100MHz	±10% (K)	±5% (J), ±2% (G)	25 @ 100MHz	990	1.250	240
PE-0603CD201KTT	200 @ 100MHz	±10% (K)	±5% (J), ±2% (G)	25 @ 100MHz	900	1.980	240
PE-0603CD211KTT	210 @ 100MHz	±10% (K)	±5% (J), ±2% (G)	27 @ 100MHz	895	2.060	220
PE-0603CD221KTT	220 @ 100MHz	±10% (K)	±5% (J), ±2% (G)	25 @ 100MHz	900	1.900	200
PE-0603CD251KTT	250 @ 100MHz	±10% (K)	±5% (J), ±2% (G)	25 @ 100MHz	822	3.550	180
PE-0603CD271KTT	270 @ 100MHz	±10% (K)	±5% (J), ±2% (G)	24 @ 100MHz	860	2.300	170
PE-0603CD331KTT	330 @ 100MHz	±10% (K)	±5% (J), ±2% (G)	22 @ 100MHz	500	2.300	150
PE-0603CD391KTT	390 @ 100MHz	±10% (K)	±5% (J), ±2% (G)	20 @ 100 MHz	350	2.900	130

Notes:
1. Inductance measured using a HP4286A RF Impedance Analyzer.
2. Q measured using a HP4291A RF Impedance Analyzer with a HP16193A Test Fixture.
3. SRF measured using a HP8753C Network Analyzer.
4. R_{DC} measured using a Valhalla Scientific model 4100 ATC Digital Ohmmeter.
5. Based on a 15ºC maximum temperature rise.
6. Sample Kit Part Number: **PE-0603CDKIT-T**
7. 5-sides or top side epoxy cap.

Typical Q vs Frequency

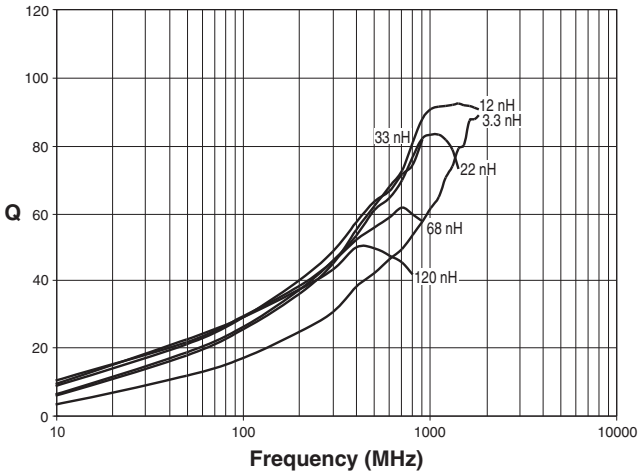

Typical Inductance vs Frequency

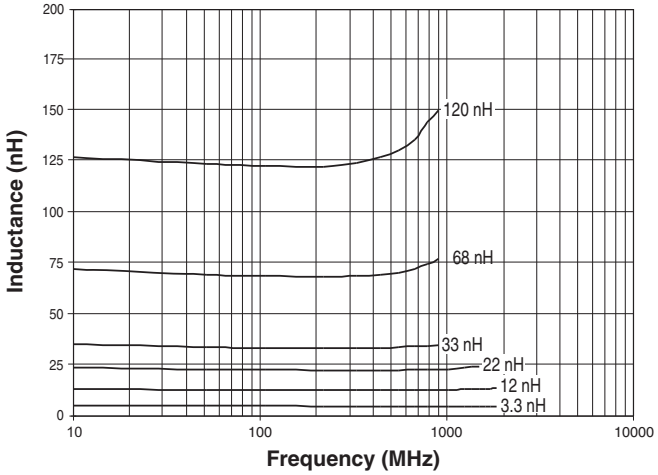

Mechanical

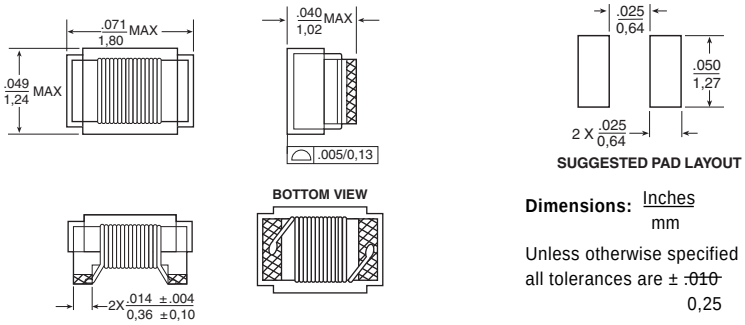

Dimensions: Inches
mm

Unless otherwise specified all tolerances are ± ~~.010~~
0,25

WIRE-WOUND RF CHIP INDUCTORS - 0805CD SERIES

Pulse
A TECHNITROL COMPANY

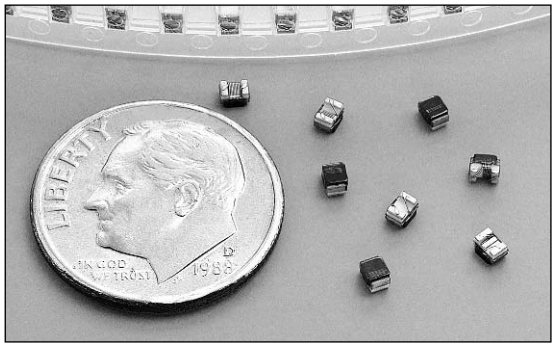

- Wirewound ceramic core construction
- High Q values and self resonant frequency
- Industry standard 0805 (2012) surface mount land pattern

RoHS COMPLIANT

See page 3 for Competition Cross Reference

Electrical Specifications @ 25°C

Part Number	Inductance [1] (nH)	Standard Tolerance	Optional Tolerance	Q [2] (MIN)	SRF [3] (MHz MIN)	R_{DC} [4] (Ω MAX)	I_{DC} [5] (mA MAX)
PE-0805CD2N8KTT	2.8 @ 250MHz	±10% (K)	±5% (J), ±2% (G), ±1% (F)	80 @ 1500MHz	>6000	0.06	600
PE-0805CD3N0KTT	3.0 @ 250MHz	±10% (K)	±5% (J), ±2% (G), ±1% (F)	65 @ 1500MHz	>6000	0.06	600
PE-0805CD030KTT	3.32 @ 250MHz	±10% (K)	±5% (J), ±2% (G), ±1% (F)	40 @ 1500MHz	6000	0.08	600
PE-0805CD050KTT	5.6 @ 250MHz	±10% (K)	±5% (J), ±2% (G), ±1% (F)	50 @ 1500MHz	5500	0.10	600
PE-0805CD060KTT	6.5 @ 250MHz	±10% (K)	±5% (J), ±2% (G), ±1% (F)	50 @ 1000MHz	5000	0.11	600
PE-0805CD7N5KTT	7.5 @ 250MHz	±10% (K)	±5% (J), ±2% (G), ±1% (F)	50 @ 1000MHz	4500	0.14	600
PE-0805CD080KTT	7.9 @ 250MHz	±10% (K)	±5% (J), ±2% (G), ±1% (F)	50 @ 1000MHz	4700	0.12	600
PE-0805CD100KTT	10.2 @ 250MHz	±10% (K)	±5% (J), ±2% (G), ±1% (F)	50 @ 500MHz	4100	0.14	600
PE-0805CD120KTT	11.9 @ 250MHz	±10% (K)	±5% (J), ±2% (G), ±1% (F)	50 @ 500MHz	4000	0.15	600
PE-0805CD150KTT	14.9 @ 250MHz	±10% (K)	±5% (J), ±2% (G), ±1% (F)	50 @ 500MHz	3400	0.17	600
PE-0805CD180KTT	17.95 @ 250MHz	±10% (K)	±5% (J), ±2% (G), ±1% (F)	50 @ 500MHz	3300	0.20	600
PE-0805CD220KTT	21.7 @ 250MHz	±10% (K)	±5% (J), ±2% (G), ±1% (F)	55 @ 500MHz	2600	0.22	500
PE-0805CD240KTT	24 @ 250MHz	±10% (K)	±5% (J), ±2% (G), ±1% (F)	50 @ 500MHz	2000	0.22	500
PE-0805CD270KTT	26.5 @ 250MHz	±10% (K)	±5% (J), ±2% (G), ±1% (F)	55 @ 500MHz	2500	0.25	500
PE-0805CD330KTT	32.75 @ 250MHz	±10% (K)	±5% (J), ±2% (G), ±1% (F)	60 @ 500MHz	2050	0.27	500
PE-0805CD360KTT	36 @ 250MHz	±10% (K)	±5% (J), ±2% (G), ±1% (F)	55 @ 500MHz	1700	0.27	500
PE-0805CD390KTT	38.5 @ 250MHz	±10% (K)	±5% (J), ±2% (G), ±1% (F)	60 @ 500MHz	2000	0.29	500
PE-0805CD430KTT	43 @ 200MHz	±10% (K)	±5% (J), ±2% (G), ±1% (F)	60 @ 500MHz	1650	0.34	500
PE-0805CD470KTT	46.6 @ 200MHz	±10% (K)	±5% (J), ±2% (G), ±1% (F)	60 @ 500MHz	1650	0.31	500
PE-0805CD560KTT	55.5 @ 200MHz	±10% (K)	±5% (J), ±2% (G), ±1% (F)	60 @ 500MHz	1550	0.34	500
PE-0805CD680KTT	67.8 @ 200MHz	±10% (K)	±5% (J), ±2% (G), ±1% (F)	60 @ 500MHz	1450	0.38	500
PE-0805CD820KTT	82.7 @ 150MHz	±10% (K)	±5% (J), ±2% (G), ±1% (F)	60 @ 500MHz	1300	0.42	400
PE-0805CD910KTT	91 @ 150MHz	±10% (K)	±5% (J), ±2% (G), ±1% (F)	65 @ 500MHz	1200	0.44	400
PE-0805CD101KTT	98.7 @ 150MHz	±10% (K)	±5% (J), ±2% (G), ±1% (F)	60 @ 500MHz	1200	0.46	400
PE-0805CD111KTT	110 @ 150MHz	±10% (K)	±5% (J), ±2% (G), ±1% (F)	50 @ 250MHz	1000	0.48	400
PE-0805CD121KTT	119.7 @ 150MHz	±10% (K)	±5% (J), ±2% (G), ±1% (F)	50 @ 250MHz	1100	0.51	400
PE-0805CD151KTT	149.4 @ 100MHz	±10% (K)	±5% (J), ±2% (G), ±1% (F)	50 @ 250MHz	920	0.56	400
PE-0805CD181KTT	179.6 @ 100MHz	±10% (K)	±5% (J), ±2% (G), ±1% (F)	50 @ 250MHz	870	0.64	400
PE-0805CD221KTT	217 @ 100MHz	±10% (K)	±5% (J), ±2% (G), ±1% (F)	45 @ 250MHz	850	0.70	400
PE-0805CD241KTT	240 @ 100MHz	±10% (K)	±5% (J), ±2% (G), ±1% (F)	44 @ 250MHz	690	1.00	350
PE-0805CD271KTT	269 @ 100MHz	±10% (K)	±5% (J), ±2% (G), ±1% (F)	45 @ 250MHz	650	1.00	350
PE-0805CD331KTT	331 @ 100MHz	±10% (K)	±5% (J), ±2% (G), ±1% (F)	45 @ 250MHz	600	1.40	310
PE-0805CD391KTT	386 @ 100MHz	±10% (K)	±5% (J), ±2% (G), ±1% (F)	35 @ 250MHz	560	1.50	290
PE-0805CD471KTT	477 @ 50MHz	±10% (K)	±5% (J), ±2% (G), ±1% (F)	33 @ 100MHz	375	1.76	250
PE-0805CD561KTT	545 @ 25MHz	±10% (K)	±5% (J), ±2% (G), ±1% (F)	23 @ 50MHz	340	1.90	230
PE-0805CD681KTT	674 @ 25MHz	±10% (K)	±5% (J), ±2% (G), ±1% (F)	23 @ 50MHz	188	2.20	190
PE-0805CD821KTT	783 @ 25MHz	±10% (K)	±5% (J), ±2% (G), ±1% (F)	23 @ 50MHz	215	2.35	180
PE-0805CD102KTT	1000 @ 25MHz	±10% (K)	±5% (J), ±2% (G), ±1% (F)	20 @ 50MHz	200	3.60	150
PE-0805CD122KTT	1200 @ 25MHz	±10% (K)	±5% (J), ±2% (G), ±1% (F)	20 @ 50MHz	200	4.10	120
PE-0805CD152KTT	1500 @ 25MHz	±10% (K)	±5% (J), ±2% (G), ±1% (F)	20 @ 50MHz	200	5.00	100

******For other inductance values in 0805 size, please refer to 0805CM (page 12-13) and 0805FT (page 14-15).******

NOTES:

1. Inductance measured with HP4286A RF Impedance Analyzer.
2. Q measured using a HP4291A RF Impedance Analyzer with a HP16193A Test Fixture.
3. SRF measured using a HP8753C Network Analyzer.
4. R_{DC} measured using a Valhalla Scientific model 4100 ATC Digital Ohmmeter.
5. Based on a 15°C maximum temperature rise.
6. Sample Kit Part Number: **PE-0805CDKIT-T**

WIRE-WOUND RF CHIP INDUCTORS - 0805CD SERIES

Typical Q vs Frequency

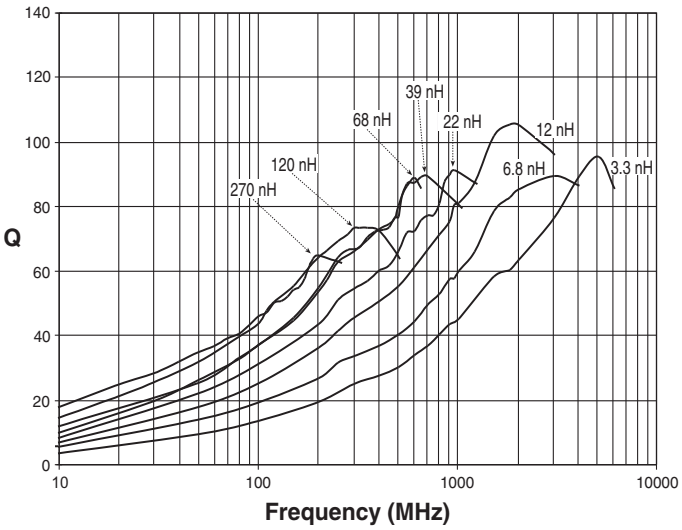

Typical Inductance vs Frequency

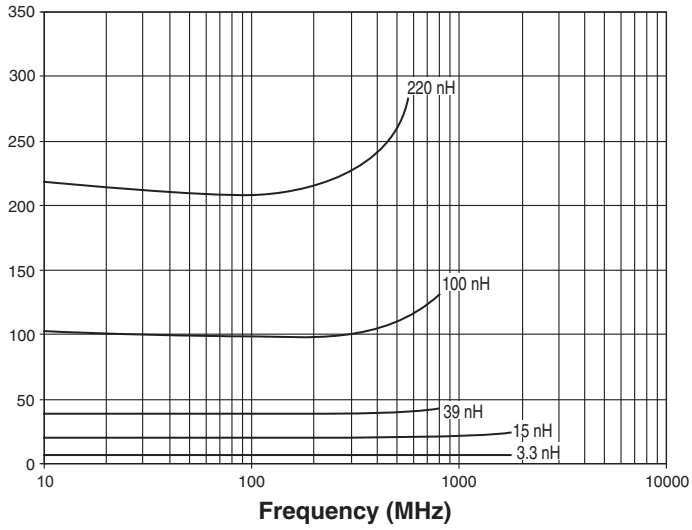

Mechanical

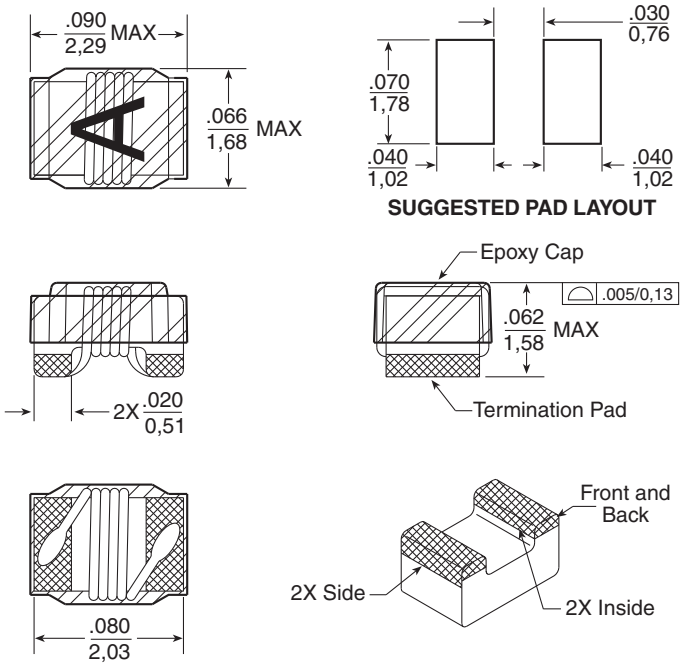

Weight . . . . . 0.012 grams
Tape & Reel 2000/reel
Dimensions: ~~Inches~~ mm
Unless otherwise specified all tolerances are ± ~~.010~~

WIRE-WOUND RF CHIP INDUCTORS - 0805CM SERIES

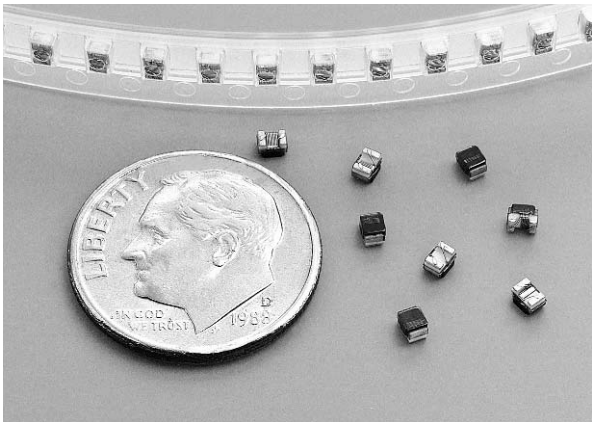

- Wirewound ceramic core construction
- High Q values and self resonant frequency
- Industry standard 0805 (2012) surface mount land pattern

See page 3 for Competition Cross Reference

Electrical Specifications @ 25°C

Part Number	Inductance [1] (nH)	Standard Tolerance	Optional Tolerance	Q [2] (MIN)	SRF [3] (MHz MIN)	R_{DC} [4] (Ω MAX)	I_{DC} [5] (mA MAX)
PE-0805CM030KTT	3.3 @ 250MHz	±10% (K)	±5% (J), ±2% (G)	37 @ 1500MHz	5000	0.08	600
PE-0805CM060KTT	6.8 @ 250MHz	±10% (K)	±5% (J), ±2% (G)	46 @ 1000MHz	5000	0.15	600
PE-0805CM080KTT	8.2 @ 250MHz	±10% (K)	±5% (J), ±2% (G)	47 @ 1000MHz	3900	0.13	600
PE-0805CM100KTT	10 @ 250MHz	±10% (K)	±5% (J), ±2% (G)	60 @ 500MHz	3900	0.10	600
PE-0805CM120KTT	12 @ 250MHz	±10% (K)	±5% (J), ±2% (G)	50 @ 500MHz	2900	0.13	600
PE-0805CM150KTT	15 @ 250MHz	±10% (K)	±5% (J), ±2% (G)	50 @ 500MHz	2700	0.15	600
PE-0805CM180KTT	18 @ 250MHz	±10% (K)	±5% (J), ±2% (G)	50 @ 500MHz	2600	0.13	600
PE-0805CM220KTT	22 @ 250MHz	±10% (K)	±5% (J), ±2% (G)	55 @ 500MHz	2200	0.13	500
PE-0805CM270KTT	27 @ 250MHz	±10% (K)	±5% (J), ±2% (G)	55 @ 500MHz	2000	0.23	500
PE-0805CM330KTT	33 @ 250MHz	±10% (K)	±5% (J), ±2% (G)	58 @ 500MHz	1800	0.18	500
PE-0805CM390KTT	39 @ 250MHz	±10% (K)	±5% (J), ±2% (G)	60 @ 500MHz	1600	0.23	500
PE-0805CM470KTT	47 @ 200MHz	±10% (K)	±5% (J), ±2% (G)	60 @ 500MHz	1650	0.25	500
PE-0805CM560KTT	56 @ 200MHz	±10% (K)	±5% (J), ±2% (G)	60 @ 500MHz	1300	0.16	500
PE-0805CM680KTT	68 @ 200MHz	±10% (K)	±5% (J), ±2% (G)	60 @ 500MHz	1350	0.18	500
PE-0805CM820KTT	82 @ 150MHz	±10% (K)	±5% (J), ±2% (G)	60 @ 500MHz	1300	0.36	400
PE-0805CM101KTT	100 @ 150MHz	±10% (K)	±5% (J), ±2% (G)	55 @ 500MHz	1100	0.36	400
PE-0805CM121KTT	120 @ 150MHz	±10% (K)	±5% (J), ±2% (G)	45 @ 250MHz	1100	0.56	350
PE-0805CM151KTT	150 @ 100MHz	±10% (K)	±5% (J), ±2% (G)	50 @ 250MHz	900	0.56	350
PE-0805CM181KTT	180 @ 100MHz	±10% (K)	±5% (J), ±2% (G)	50 @ 250MHz	875	0.69	300
PE-0805CM221KTT	220 @ 100MHz	±10% (K)	±5% (J), ±2% (G)	45 @ 250MHz	800	0.85	300
PE-0805CM271KTT	270 @ 100MHz	±10% (K)	±5% (J), ±2% (G)	40 @ 100MHz	800	0.90	300
PE-0805CM331KTT	330 @ 100MHz	±10% (K)	±5% (J), ±2% (G)	40 @ 100MHz	775	1.28	300
PE-0805CM391KTT	390 @ 100MHz	±10% (K)	±5% (J), ±2% (G)	40 @ 100MHz	725	1.70	300
PE-0805CM471KTT	470 @ 100MHz	±10% (K)	±5% (J), ±2% (G)	38 @ 100MHz	600	3.25	240
PE-0805CM561KTT	560 @ 100MHz	±10% (K)	±5% (J), ±2% (G)	40 @ 100MHz	600	3.10	240
PE-0805CM681KTT	680 @ 50MHz	±10% (K)	±5% (J), ±2% (G)	32 @ 50MHz	550	3.50	240
PE-0805CM821KTT	820 @ 50MHz	±10% (K)	±5% (J), ±2% (G)	23 @ 50MHz	215	2.35	200

NOTES:

1. Inductance measured using a HP4286A RF Impedance Analyzer.
2. Q measured using a HP4291A RF Impedance Analyzer with a HP16193A Test Fixture.
3. SRF measured using a HP8753C Network Analyzer.
4. R_{DC} measured using a Valhalla Scientific model 4100 ATC Digital Ohmmeter.
5. Based on a 15ºC maximum temperature rise.

WIRE-WOUND RF CHIP INDUCTORS - 0805CM SERIES

Typical Q vs Frequency

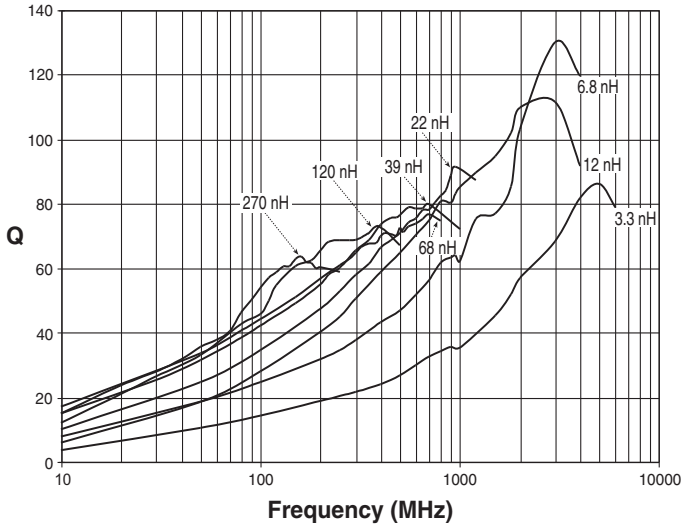

Typical Inductance vs Frequency

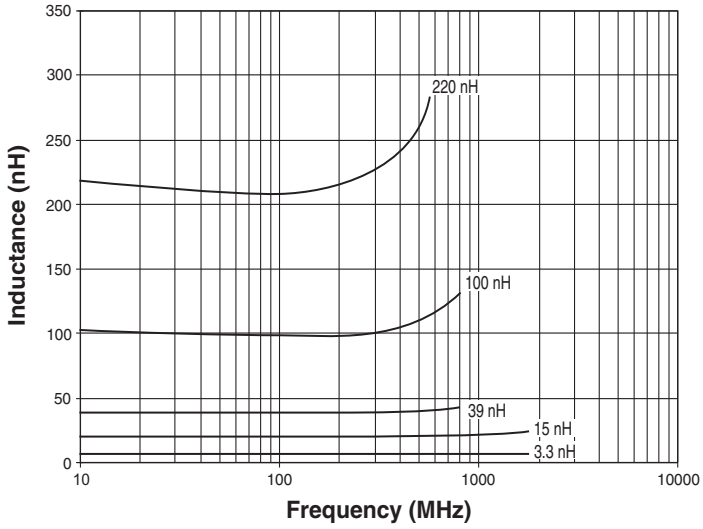

Mechanical

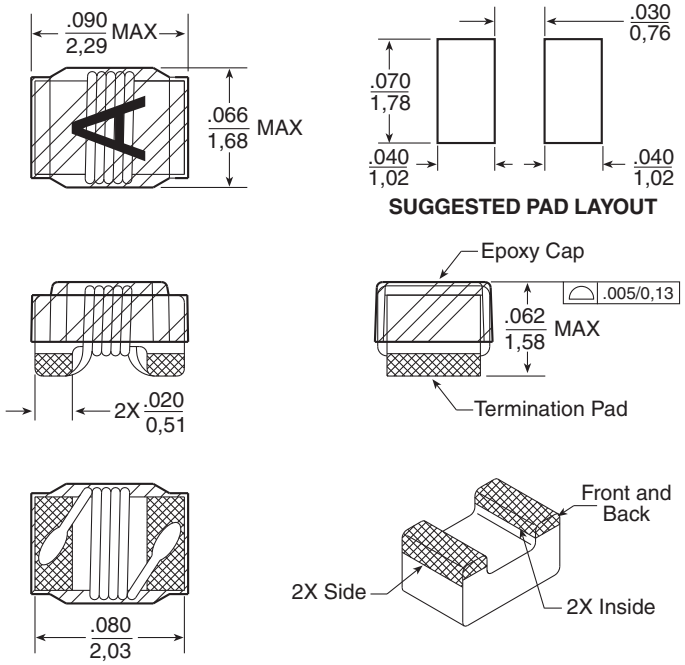

Weight . . . . . 0.012 grams
Tape & Reel 2000/reel
Dimensions: ~~Inches~~ mm
Unless otherwise specified all tolerances are ± .010

WIRE-WOUND RF CHIP INDUCTORS - 0805FT SERIES

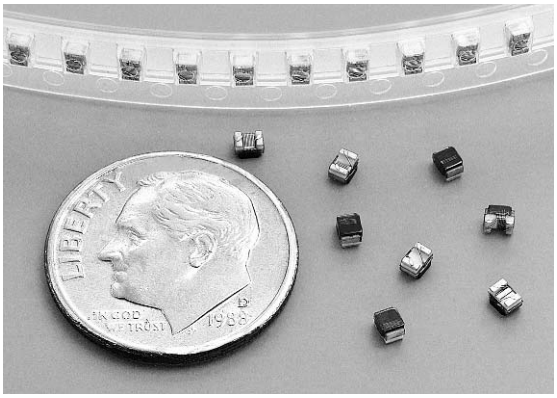

- Wirewound ferrite core construction
- High Q values and self resonant frequency
- Industry standard 0805 (2012) surface mount land pattern

See page 3 for Competition Cross Reference

Electrical Specifications @ 25°C

Part Number	Inductance [1] (µH)	Standard Tolerance	Optional Tolerance	Q [2] (MIN)	SRF [3] (MHz MIN)	R_{DC} [4] (Ω MAX)	I_{DC} [5] (mA MAX)
PE-0805FT102KTT	1.0 @ 7.96MHz	±10% (K)	±5% (J)	15 @ 7.96MHz	63	1.20	245
PE-0805FT152KTT	1.5 @ 7.96MHz	±10% (K)	±5% (J)	15 @ 7.96MHz	60	1.45	225
PE-0805FT222KTT	2.2 @ 7.96MHz	±10% (K)	±5% (J)	15 @ 7.96MHz	58	1.80	200
PE-0805FT332KTT	3.3 @ 7.96MHz	±10% (K)	±5% (J)	15 @ 7.96MHz	50	2.30	175
PE-0805FT472KTT	4.7 @ 7.96MHz	±10% (K)	±5% (J)	15 @7.96MHz	43	2.80	140
PE-0805FT682KTT	6.8 @ 7.96MHz	±10% (K)	±5% (J)	15 @ 7.96MHz	36	3.40	115
PE-0805FT103KTT	10 @ 2.52MHz	±10% (K)	±5% (J)	10 @ 2.52MHz	30	4.70	98
PE-0805FT153KTT	15 @ 2.52MHz	±10% (K)	±5% (J)	10 @ 2.52MHz	23	6.50	80
PE-0805FT223KTT	22 @ 2.52MHz	±10% (K)	±5% (J)	10 @ 2.52MHz	20	8.00	68
PE-0805FT333KTT	33 @ 2.52MHz	±10% (K)	±5% (J)	10 @ 2.52MHz	17	10.70	60
PE-0805FT473KTT	47 @ 2.52MHz	±10% (K)	±5% (J)	10 @ 2.52MHz	14	13.80	55
PE-0805FT683KTT	68 @ 2.52MHz	±10% (K)	±5% (J)	8 @ 2.52MHz	11	17.50	49

NOTES:

1. Inductance measured using a HP4286A RF Impedance Analyzer.
2. Q measured using a HP4291A RF Impedance Analyzer with a HP16193A Test Fixture.
3. SRF measured using a HP8753C Network Analyzer.
4. R_{DC} measured using a Valhalla Scientific model 4100 ATC Digital Ohmmeter.
5. Based on a 15ºC maximum temperature rise.
6. Sample Kit Part Number: **PE-0805FTKIT-T**

WIRE-WOUND RF CHIP INDUCTORS - 0805FT SERIES

Typical Q vs. Frequency

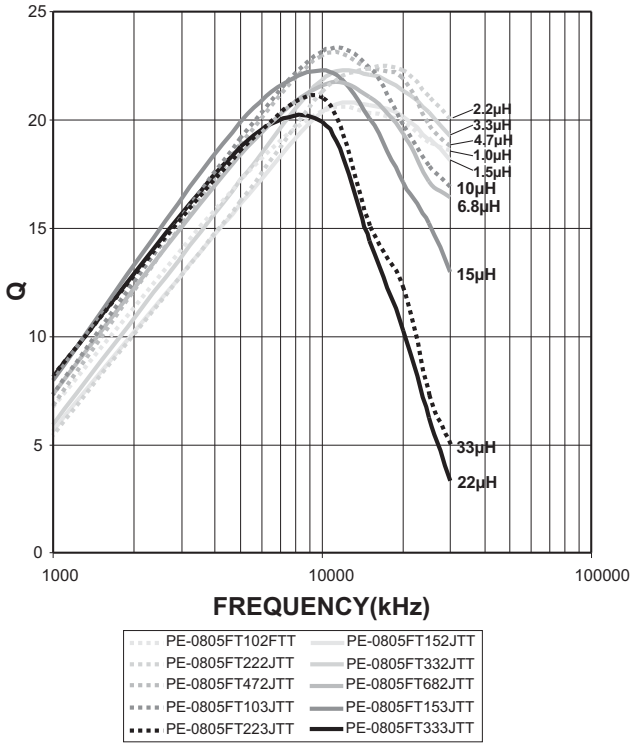

Typical Inductance vs. Frequency

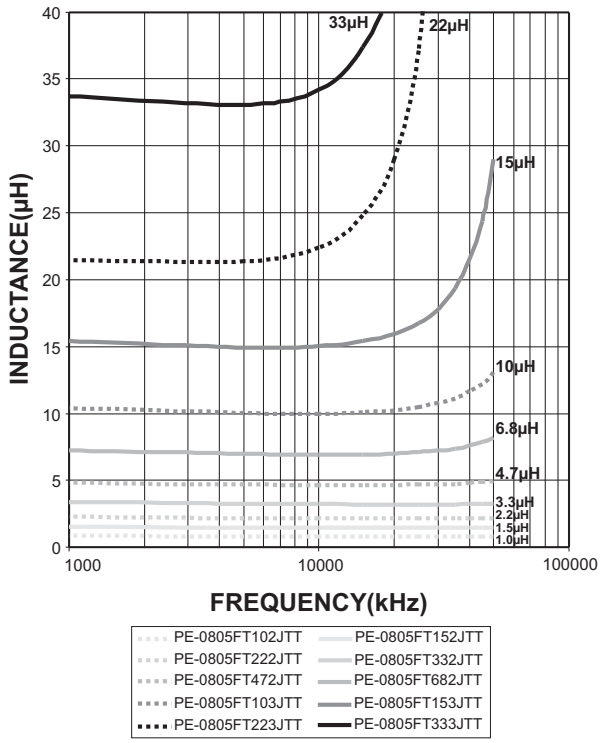

Mechanical

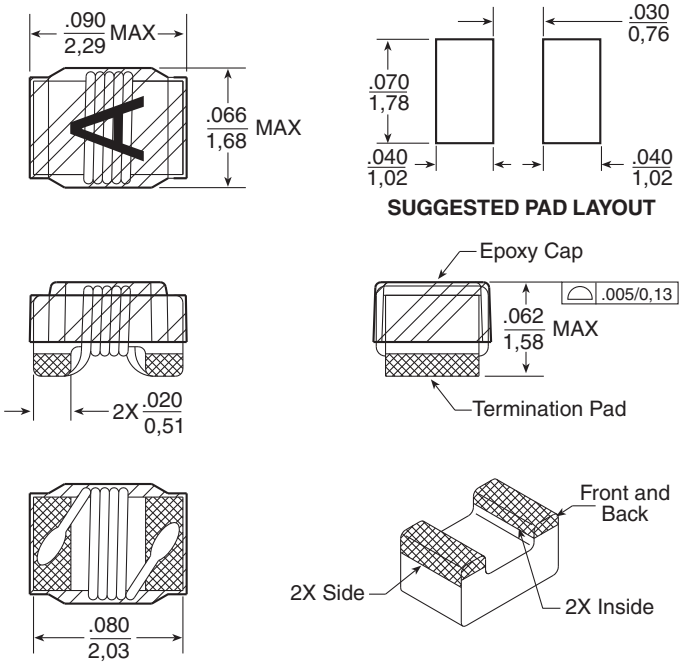

Weight . . . . . 0.012 grams
Tape & Reel 2000/reel
Dimensions: Inches
mm
Unless otherwise specified all tolerances are ± .010

WIRE-WOUND RF CHIP INDUCTORS - 1008CD SERIES

Pulse
A TECHNITROL COMPANY

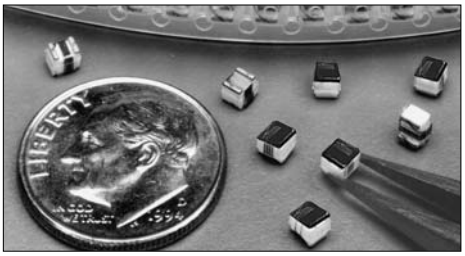

- Wirewound ceramic core construction
- High Q values and high self-resonant frequency
- Industry standard 1008 (2520) SMT land pattern

RoHS COMPLIANT

See page 3 for Competition Cross Reference

Electrical Specifications @ 25°C

Part Number	Inductance [1] (nH)	Standard Tolerance	Optional Tolerance	Q [2] (MIN)	SRF [3] (MHz MIN)	R_{DC} [4] (Ω MAX)	I_{DC} [5] (mA MAX)
PE-1008CD090KTT	9,7 @ 50MHz	±10% (K)	±5% (J), ±2% (G), ±1% (F)	50 @ 500MHz	4100	0.09	1000
PE-1008CD100KTT	10 @ 50MHz	±10% (K)	±5% (J), ±2% (G), ±1% (F)	50 @ 500MHz	4100	0.09	1000
PE-1008CD120KTT	12 @ 50MHz	±10% (K)	±5% (J), ±2% (G), ±1% (F)	50 @ 500MHz	3300	0.09	1000
PE-1008CD140KTT	14,3 @ 50MHz	±10% (K)	±5% (J), ±2% (G), ±1% (F)	50 @ 500MHz	1850	0.10	1000
PE-1008CD150KTT	15 @ 50MHz	±10% (K)	±5% (J), ±2% (G), ±1% (F)	50 @ 500MHz	1850	0.10	1000
PE-1008CD180KTT	17,8 @ 50MHz	±10% (K)	±5% (J), ±2% (G), ±1% (F)	50 @ 350MHz	2500	0.11	1000
PE-1008CD210KTT	20,9 @ 50MHz	±10% (K)	±5% (J), ±2% (G), ±1% (F)	55 @ 350MHz	1800	0.12	1000
PE-1008CD220KTT	22 @ 50MHz	±10% (K)	±5% (J), ±2% (G), ±1% (F)	55 @ 350MHz	1800	0.12	1000
PE-1008CD260KTT	26,2 @ 50MHz	±10% (K)	±5% (J), ±2% (G), ±1% (F)	55 @ 350MHz	1500	0.13	1000
PE-1008CD270KTT	27 @ 50MHz	±10% (K)	±5% (J), ±2% (G), ±1% (F)	55 @ 350MHz	1500	0.11	1000
PE-1008CD320KTT	31,8 @ 50MHz	±10% (K)	±5% (J), ±2% (G), ±1% (F)	60 @ 350MHz	1600	0.16	1000
PE-1008CD330KTT	33 @ 50MHz	±10% (K)	±5% (J), ±2% (G), ±1% (F)	60 @ 350MHz	1600	0.14	1000
PE-1008CD380KTT	38,2 @ 50MHz	±10% (K)	±5% (J), ±2% (G), ±1% (F)	60 @ 350MHz	1400	0.15	1000
PE-1008CD390KTT	39 @ 50MHz	±10% (K)	±5% (J), ±2% (G), ±1% (F)	60 @ 350MHz	1400	0.12	1000
PE-1008CD450KTT	44,9 @ 50MHz	±10% (K)	±5% (J), ±2% (G), ±1% (F)	65 @ 350MHz	1200	0.16	1000
PE-1008CD470KTT	47 @ 50MHz	±10% (K)	±5% (J), ±2% (G), ±1% (F)	65 @ 350MHz	1200	0.08	1000
PE-1008CD540KTT	54 @ 50MHz	±10% (K)	±5% (J), ±2% (G), ±1% (F)	65 @ 350MHz	1150	0.18	1000
PE-1008CD560KTT	56 @ 50MHz	±10% (K)	±5% (J), ±2% (G), ±1% (F)	65 @ 350MHz	1150	0.12	1000
PE-1008CD650KTT	65 @ 50MHz	±10% (K)	±5% (J), ±2% (G), ±1% (F)	65 @ 350MHz	1100	0.20	1000
PE-1008CD680KTT	68 @ 50MHz	±10% (K)	±5% (J), ±2% (G), ±1% (F)	65 @ 350MHz	1100	0.07	1000
PE-1008CD790KTT	79 @ 50MHz	±10% (K)	±5% (J), ±2% (G), ±1% (F)	60 @ 350MHz	950	0.22	1000
PE-1008CD820KTT	82 @ 50MHz	±10% (K)	±5% (J), ±2% (G), ±1% (F)	60 @ 350MHz	950	0.14	1000
PE-1008CD960KTT	96,1 @ 25MHz	±10% (K)	±5% (J), ±2% (G), ±1% (F)	60 @ 350MHz	900	0.56	650
PE-1008CD101KTT	100 @ 25MHz	±10% (K)	±5% (J), ±2% (G), ±1% (F)	60 @ 350MHz	900	0.15	650
PE-1008CD121KTT	120 @ 25MHz	±10% (K)	±5% (J), ±2% (G), ±1% (F)	60 @ 350MHz	950	0.63	650
PE-1008CD141KTT	145,7 @ 25MHz	±10% (K)	±5% (J), ±2% (G), ±1% (F)	45 @ 100MHz	625	0.70	580
PE-1008CD151KTT	150 @ 25MHz	±10% (K)	±5% (J), ±2% (G), ±1% (F)	45 @ 100MHz	625	0.16	580
PE-1008CD161KTT	160 @ 25MHz	±10% (K)	±5% (J), ±2% (G), ±1% (F)	45 @ 100MHz	625	0.77	600
PE-1008CD171KTT	170,2 @ 25MHz	±10% (K)	±5% (J), ±2% (G), ±1% (F)	45 @ 100MHz	650	0.77	620
PE-1008CD181KTT	180 @ 25MHz	±10% (K)	±5% (J), ±2% (G), ±1% (F)	45 @ 100MHz	650	0.77	620
PE-1008CD211KTT	216 @ 25MHz	±10% (K)	±5% (J), ±2% (G), ±1% (F)	45 @ 100MHz	625	0.84	500
PE-1008CD221KTT	220 @ 25MHz	±10% (K)	±5% (J), ±2% (G), ±1% (F)	45 @ 100MHz	625	0.84	500
PE-1008CD261KTT	260,5 @ 25MHz	±10% (K)	±5% (J), ±2% (G), ±1% (F)	45 @ 100MHz	525	0.91	500
PE-1008CD271KTT	270 @ 25MHz	±10% (K)	±5% (J), ±2% (G), ±1% (F)	45 @ 100MHz	525	0.91	500
PE-1008CD311KTT	313,6 @ 25MHz	±10% (K)	±5% (J), ±2% (G), ±1% (F)	45 @ 100MHz	500	1.05	450
PE-1008CD331KTT	330 @ 25MHz	±10% (K)	±5% (J), ±2% (G), ±1% (F)	45 @ 100MHz	500	1.05	450
PE-1008CD361KTT	365 @ 25MHz	±10% (K)	±5% (J), ±2% (G), ±1% (F)	45 @ 100MHz	500	1.12	470
PE-1008CD391KTT	390 @ 25MHz	±10% (K)	±5% (J), ±2% (G), ±1% (F)	45 @ 100MHz	475	1.12	470
PE-1008CD451KTT	447 @ 25MHz	±10% (K)	±5% (J), ±2% (G), ±1% (F)	45 @ 100MHz	450	1.19	420
PE-1008CD471KTT	470 @ 25MHz	±10% (K)	±5% (J), ±2% (G), ±1% (F)	45 @ 100MHz	450	1.19	420
PE-1008CD541KTT	535 @ 25MHz	±10% (K)	±5% (J), ±2% (G), ±1% (F)	45 @ 100MHz	415	1.33	310
PE-1008CD561KTT	560 @ 25MHz	±10% (K)	±5% (J), ±2% (G), ±1% (F)	45 @ 100MHz	415	1.33	310
PE-1008CD591KTT	586 @ 25MHz	±10% (K)	±5% (J), ±2% (G), ±1% (F)	45 @ 100MHz	375	1.40	300
PE-1008CD621KTT	620 @ 25MHz	±10% (K)	±5% (J), ±2% (G), ±1% (F)	45 @ 100MHz	375	1.40	300
PE-1008CD641KTT	636 @ 25MHz	±10% (K)	±5% (J), ±2% (G), ±1% (F)	45 @ 100MHz	375	1.47	230
PE-1008CD681KTT	680 @ 25MHz	±10% (K)	±5% (J), ±2% (G), ±1% (F)	45 @ 100MHz	375	1.47	230
PE-1008CD711KTT	708,8 @ 25MHz	±10% (K)	±5% (J), ±2% (G), ±1% (F)	45 @ 100MHz	360	1.54	200
PE-1008CD751KTT	750 @ 25MHz	±10% (K)	±5% (J), ±2% (G), ±1% (F)	45 @ 100MHz	350	1.61	200
PE-1008CD771KTT	768 @ 25MHz	±10% (K)	±5% (J), ±2% (G), ±1% (F)	45 @ 100MHz	325	1.61	180
PE-1008CD821KTT	820 @ 25MHz	±10% (K)	±5% (J), ±2% (G), ±1% (F)	45 @ 100MHz	325	1.61	180
PE-1008CD851KTT	849.8 @ 25MHz	±10% (K)	±5% (J), ±2% (G), ±1% (F)	35 @ 50MHz	320	1.68	150

WIRE-WOUND RF CHIP INDUCTORS - 1008CD SERIES

Pulse
A TECHNITROL COMPANY

Electrical Specifications @ 25°C *(continued)*

Part Number	Inductance [1] (nH)	Standard Tolerance	Optional Tolerance	Q [2] (MIN)	SRF [3] (MHz MIN)	R_{DC} [4] (Ω MAX)	I_{DC} [5] (mA MAX)
PE-1008CD911KTT	909,5 @ 25MHz	±10% (K)	±5% (J), ±2% (G), ±1% (F)	35 @ 50MHz	290	1.75	150
PE-1008CD102KTT	1000 @ 25MHz	±10% (K)	±5% (J), ±2% (G), ±1% (F)	35 @ 50MHz	260	1.90	120
PE-1008CD112KTT	1184 @ 7.9MHz	±10% (K)	±5% (J), ±2% (G), ±1% (F)	35 @ 50MHz	250	2.00	310
PE-1008CD122KTT	1200 @ 7.9MHz	±10% (K)	±5% (J), ±2% (G), ±1% (F)	35 @ 50MHz	250	2.00	310
PE-1008CD142KTT	1470 @ 7.9MHz	±10% (K)	±5% (J), ±2% (G), ±1% (F)	28 @ 50MHz	200	2.30	330
PE-1008CD152KTT	1500 @ 7.9MHz	±10% (K)	±5% (J), ±2% (G), ±1% (F)	28 @ 50MHz	200	2.30	330
PE-1008CD182KTT	1792.9 @ 7.9MHz	±10% (K)	±5% (J), ±2% (G), ±1% (F)	28 @ 50MHz	160	2.60	300
PE-1008CD212KTT	2154.5 @ 7.9MHz	±10% (K)	±5% (J), ±2% (G), ±1% (F)	28 @ 50MHz	80	2.80	280
PE-1008CD222KTT	2200 @ 7.9MHz	±10% (K)	±5% (J), ±2% (G), ±1% (F)	28 @ 50MHz	80	2.80	280
PE-1008CD262KTT	2646.8 @ 7.9MHz	±10% (K)	±5% (J), ±2% (G), ±1% (F)	22 @ 25MHz	90	3.20	290
PE-1008CD272KTT	2700 @ 7.9MHz	±10% (K)	±5% (J), ±2% (G), ±1% (F)	22 @ 25MHz	90	3.20	290
PE-1008CD322KTT	3207.6 @ 7.9MHz	±10% (K)	±5% (J), ±2% (G), ±1% (F)	22 @ 25MHz	40	3.40	290
PE-1008CD332KTT	3300 @ 7.9MHz	±10% (K)	±5% (J), ±2% (G), ±1% (F)	22 @ 25MHz	40	3.40	290
PE-1008CD372KTT	3758.2 @ 7.9MHz	±10% (K)	±5% (J), ±2% (G), ±1% (F)	20 @ 25MHz	35	3.60	260
PE-1008CD392KTT	3900 @ 7.9MHz	±10% (K)	±5% (J), ±2% (G), ±1% (F)	20 @ 25MHz	35	3.60	260
PE-1008CD452KTT	4526.2 @ 7.9MHz	±10% (K)	±5% (J), ±2% (G), ±1% (F)	20 @ 25MHz	25	4.00	260
PE-1008CD472KTT	4700 @ 7.9MHz	±10% (K)	±5% (J), ±2% (G), ±1% (F)	20 @ 25MHz	25	4.00	260
PE-1008CD562KTT	5600 @ 7.9MHz	±10% (K)	±5% (J), ±2% (G), ±1% (F)	20 @ 25MHz	60	5.40	240
PE-1008CD682KTT	6800 @ 7.9MHz	±10% (K)	±5% (J), ±2% (G), ±1% (F)	18 @ 7.9MHz	40	4.90	200
PE-1008CD822KTT	8200 @ 7.9MHz	±10% (K)	±5% (J), ±2% (G), ±1% (F)	18 @ 7.9MHz	25	6.00	160

******For other inductance values in 1008 size, please refer to 1008CM (pages 18-19) and 1008CQ (pages 20-21)******

Notes:

1. Inductance measured using a HP4286A RF Impedance Analyzer.
2. Q measured using a HP4291A RF Impedance Analyzer with a HP16193A Test Fixture.
3. SRF measured using a HP8753C Network Analyzer.
4. R_{DC} measured using Valhalla Scientific model 4100 ATC Digital Ohmmeter.
5. Based on a 15ºC maximum temperature rise.
6. Sample Kit Part Number: **PE-1008CDKIT-T**
7. Component Weight: 0.032 grams typical.
8. These components are 0.055" in height.

Typical Q vs Frequency

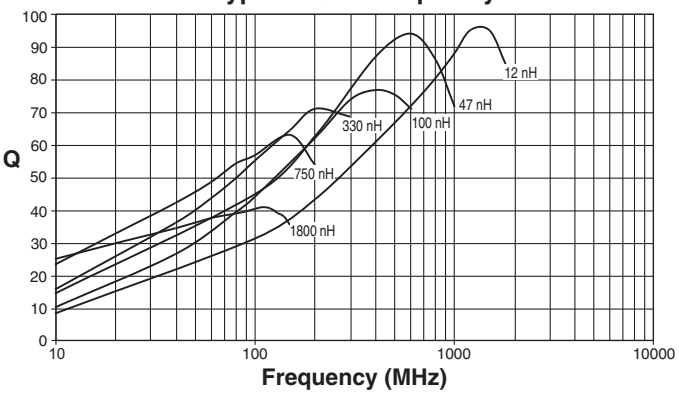

Typical Inductance vs Frequency

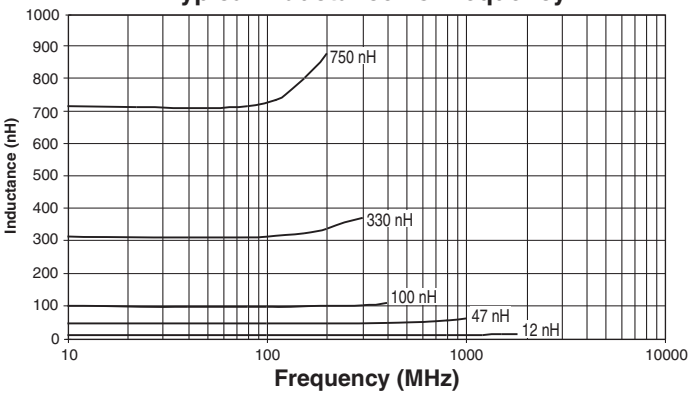

Mechanical

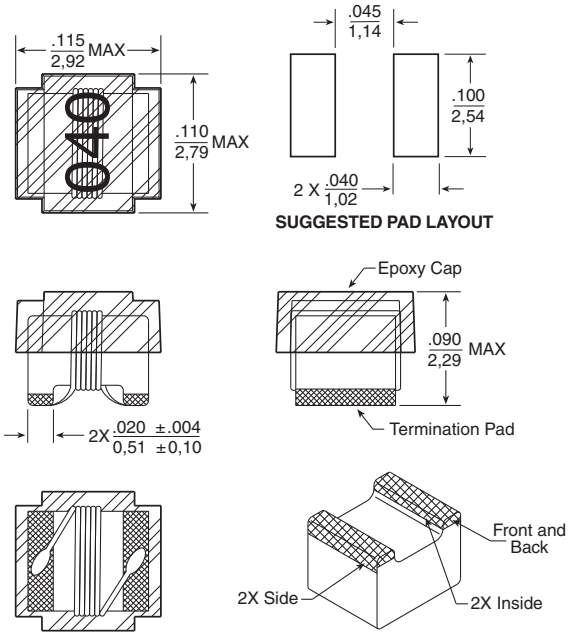

Dimensions: Inches / mm

Unless otherwise specified, all tolerances are ± .010 / 0,25

WIRE-WOUND RF CHIP INDUCTORS - 1008CM SERIES

Pulse
A TECHNITROL COMPANY

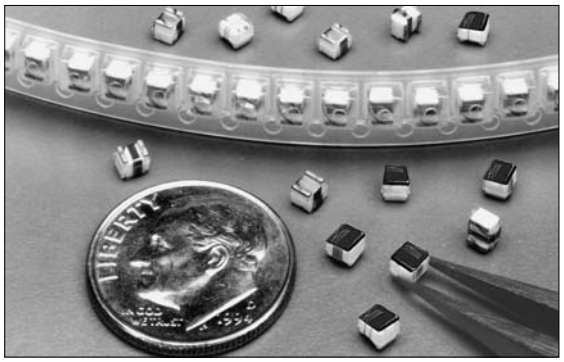

- Wirewound ceramic core construction
- High Q values and self-resonant frequency
- Industry standard 1008 (2520) surface mount land pattern

RoHS COMPLIANT

See page 3 for Competition Cross Reference

Electrical Specifications @ 25°C

Part Number	Inductance [1] (nH)	Standard Tolerance	Optional Tolerance	Q [2] (MIN)	SRF Min [3] (MHz MIN)	R_{DC} [4] (Ω MAX)	I_{DC} [5] (mA MAX)
PE-1008CM100KTT	10 @ 50MHz	±10% (K)	±5% (J), ±2% (G)	50 @ 500MHz	4500	0.09	1000
PE-1008CM120KTT	12 @ 50MHz	±10% (K)	±5% (J), ±2% (G)	65 @ 500MHz	2300	0.09	1000
PE-1008CM150KTT	15 @ 50MHz	±10% (K)	±5% (J), ±2% (G)	55 @ 500MHz	1850	0.19	1000
PE-1008CM180KTT	18 @ 50MHz	±10% (K)	±5% (J), ±2% (G)	55 @ 350MHz	2200	0.06	1000
PE-1008CM220KTT	22 @ 50MHz	±10% (K)	±5% (J), ±2% (G)	55 @ 350MHz	1800	0.09	1000
PE-1008CM270KTT	27 @ 50MHz	±10% (K)	±5% (J), ±2% (G)	60 @ 350MHz	1500	0.11	1000
PE-1008CM330KTT	33 @ 50MHz	±10% (K)	±5% (J), ±2% (G)	60 @ 350MHz	1800	0.18	800
PE-1008CM390KTT	39 @ 50MHz	±10% (K)	±5% (J), ±2% (G)	70 @ 350MHz	1400	0.12	1000
PE-1008CM470KTT	47 @ 50MHz	±10% (K)	±5% (J), ±2% (G)	70 @ 350MHz	1200	0.08	1000
PE-1008CM560KTT	56 @ 50MHz	±10% (K)	±5% (J), ±2% (G)	60 @ 350MHz	1150	0.12	1000
PE-1008CM680KTT	68 @ 50MHz	±10% (K)	±5% (J), ±2% (G)	70 @ 350MHz	1100	0.07	1000
PE-1008CM820KTT	82 @ 50MHz	±10% (K)	±5% (J), ±2% (G)	65 @ 350MHz	950	0.14	950
PE-1008CM101KTT	100 @ 25MHz	±10% (K)	±5% (J), ±2% (G)	65 @ 350MHz	900	0.15	650
PE-1008CM121KTT	120 @ 25MHz	±10% (K)	±5% (J), ±2% (G)	60 @ 350MHz	825	0.22	650
PE-1008CM151KTT	150 @ 25MHz	±10% (K)	±5% (J), ±2% (G)	50 @ 100MHz	625	0.16	580
PE-1008CM161KTT	160 @ 25MHz	±10% (K)	±5% (J), ±2% (G)	50 @ 100MHz	625	0.25	600
PE-1008CM181KTT	180 @ 25MHz	±10% (K)	±5% (J), ±2% (G)	50 @ 100MHz	650	0.25	600
PE-1008CM201KTT	200 @ 25MHz	±10% (K)	±5% (J), ±2% (G)	50 @ 100MHz	630	0.24	580
PE-1008CM221KTT	220 @ 25MHz	±10% (K)	±5% (J), ±2% (G)	50 @ 100MHz	625	0.28	500
PE-1008CM271KTT	270 @ 25MHz	±10% (K)	±5% (J), ±2% (G)	45 @ 100MHz	525	0.50	500
PE-1008CM331KTT	330 @ 25MHz	±10% (K)	±5% (J), ±2% (G)	50 @ 100MHz	500	0.80	450
PE-1008CM371KTT	370 @ 25MHz	±10% (K)	±5% (J), ±2% (G)	50 @ 100MHz	490	0.80	430
PE-1008CM391KTT	390 @ 25MHz	±10% (K)	±5% (J), ±2% (G)	50 @ 100MHz	475	0.75	425
PE-1008CM401KTT	400 @ 25MHz	±10% (K)	±5% (J), ±2% (G)	50 @ 100MHz	470	0.75	420
PE-1008CM471KTT	470 @ 25MHz	±10% (K)	±5% (J), ±2% (G)	50 @ 100MHz	450	0.70	350
PE-1008CM561KTT	560 @ 25MHz	±10% (K)	±5% (J), ±2% (G)	50 @ 100MHz	425	0.80	350
PE-1008CM621KTT	620 @ 25MHz	±10% (K)	±5% (J), ±2% (G)	45 @ 100MHz	375	1.90	200
PE-1008CM681KTT	680 @ 25MHz	±10% (K)	±5% (J), ±2% (G)	45 @ 100MHz	375	2.30	200
PE-1008CM751KTT	750 @ 25MHz	±10% (K)	±5% (J), ±2% (G)	45 @ 100MHz	350	1.60	200
PE-1008CM821KTT	820 @ 25MHz	±10% (K)	±5% (J), ±2% (G)	40 @ 100MHz	325	3.30	200
PE-1008CM911KTT	910 @ 25MHz	±10% (K)	±5% (J), ±2% (G)	40 @ 50MHz	300	2.10	200
PE-1008CM102KTT	1000 @ 25MHz	±10% (K)	±5% (J), ±2% (G)	40 @ 50MHz	300	1.80	200
PE-1008CM122KTT	1200 @ 10MHz	±10% (K)	±5% (J), ±2% (G)	40 @ 50MHz	250	3.00	200
PE-1008CM152KTT	1500 @ 10MHz	±10% (K)	±5% (J), ±2% (G)	40 @ 50MHz	200	4.00	150
PE-1008CM182KTT	1800 @ 10MHz	±10% (K)	±5% (J), ±2% (G)	40 @ 50MHz	150	5.09	150
PE-1008CM222KTT	2200 @ 10MHz	±10% (K)	±5% (J), ±2% (G)	30 @ 25MHz	80	5.85	150
PE-1008CM272KTT	2700 @ 10MHz	±10% (K)	±5% (J), ±2% (G)	30 @ 25MHz	90	7.70	150
PE-1008CM332KTT	3300 @ 10MHz	±10% (K)	±5% (J), ±2% (G)	25 @ 15MHz	40	7.80	150
PE-1008CM392KTT	3900 @ 10MHz	±10% (K)	±5% (J), ±2% (G)	20 @ 15MHz	35	8.30	135
PE-1008CM472KTT	4700 @ 10MHz	±10% (K)	±5% (J), ±2% (G)	16 @ 15MHz	25	6.00	150

Notes:
1. Inductance measured using a HP4191A RF Impedance Analyzer.
2. Q measured using a HP4291A RF Impedance Analyzer with a HP16193A Test Fixture.
3. SRF measured using a HP8753C Network Analyzer.
4. R_{DC} measured using a Valhalla Scientific model 4100 ATC Digital Ohmmeter.
5. Based on a 15ºC maximum temperature rise.
6. Component Weight: 0.032 grams typical.

WIRE-WOUND RF CHIP INDUCTORS - 1008CM SERIES

Typical Q vs Frequency

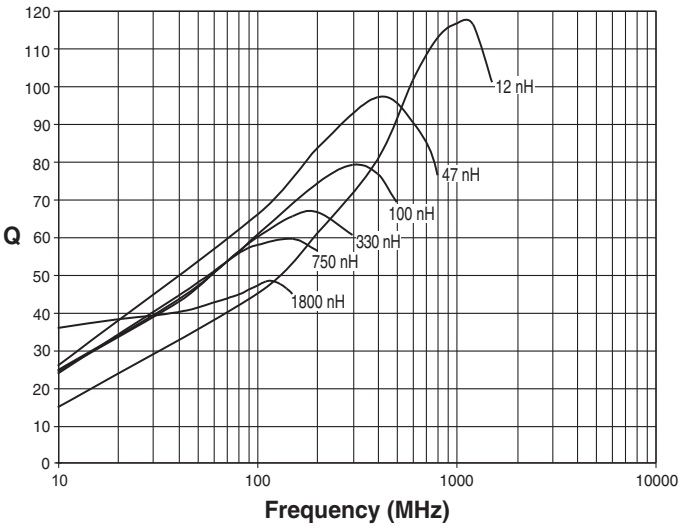

Typical Inductance vs Frequency

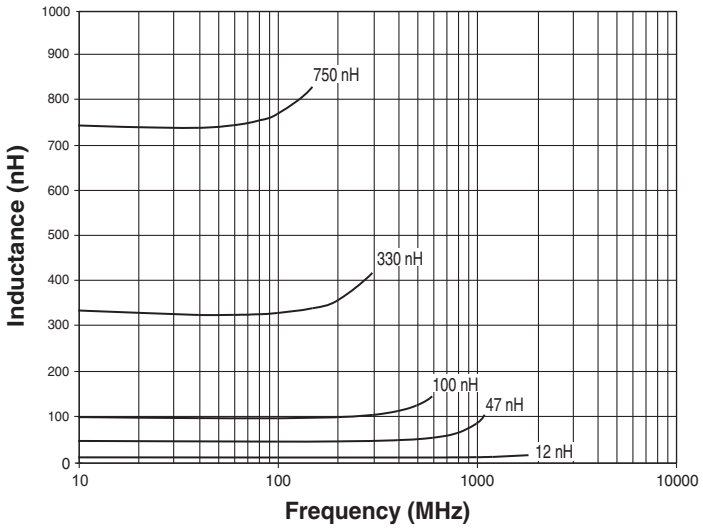

Mechanical

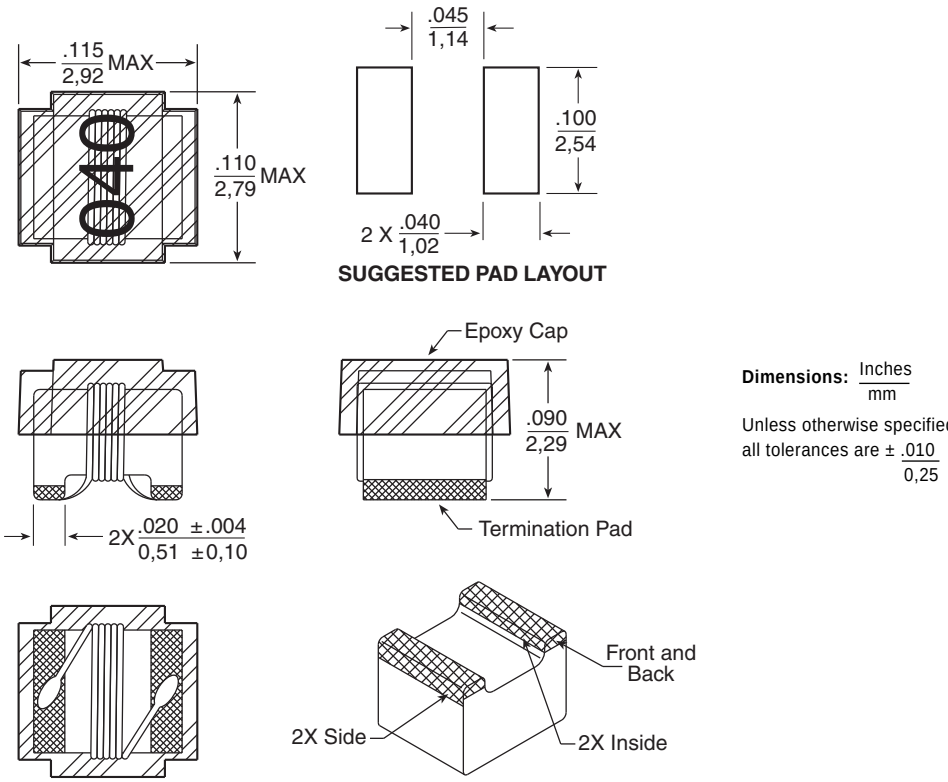

WIRE-WOUND RF CHIP INDUCTORS - 1008CQ SERIES

Pulse
A TECHNITROL COMPANY

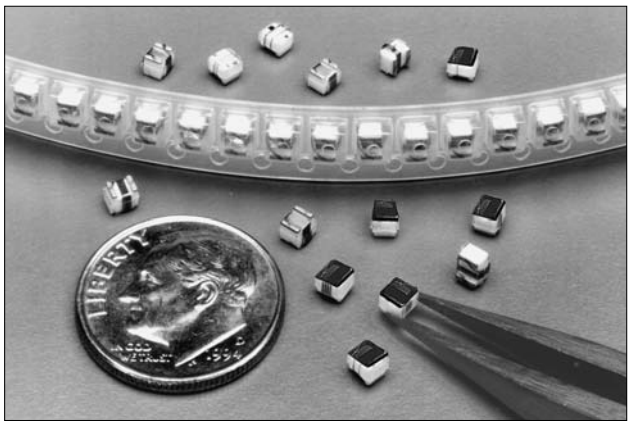

- Wirewound ceramic core construction
- High Q values and Idc values
- High self-resonant frequency
- Industry standard 1008 (2520) surface mount land pattern

RoHS COMPLIANT

See page 3 for Competition Cross Reference

Electrical Specifications @ 25°C

Part Number	Inductance [1] (nH)	Standard Tolerance	Optional Tolerance	Q [2] (MIN)	SRF Min [3] (MHz MIN)	R_{DC} [4] (Ω MAX)	I_{DC} [5] (mA MAX)
PE-1008CQ4N1KTT	4.1 @ 50MHz	±10% (K)	±5% (J)	75 @ 1500MHz	6000	0.05	1600
PE-1008CQ100KTT	10 @ 50MHz	±10% (K)	±5% (J)	60 @ 500MHz	3600	0.06	1600
PE-1008CQ120KTT	12 @ 50MHz	±10% (K)	±5% (J)	70 @ 500MHz	2800	0.06	1500
PE-1008CQ180KTT	18 @ 50MHz	±10% (K)	±5% (J)	62 @ 350MHz	2700	0.07	1400
PE-1008CQ220KTT	22 @ 50MHz	±10% (K)	±5% (J)	62 @ 350MHz	2050	0.07	1400
PE-1008CQ330KTT	33 @ 50MHz	±10% (K)	±5% (J)	75 @ 350MHz	1700	0.09	1300
PE-1008CQ390KTT	39 @ 50MHz	±10% (K)	±5% (J)	75 @ 350MHz	1300	0.09	1300
PE-1008CQ470KTT	47 @ 50MHz	±10% (K)	±5% (J)	75 @ 350MHz	1450	0.12	1200
PE-1008CQ560KTT	56 @ 50MHz	±10% (K)	±5% (J)	75 @ 350MHz	1230	0.12	1200
PE-1008CQ680KTT	68 @ 50MHz	±10% (K)	±5% (J)	80 @ 350MHz	1150	0.13	1100
PE-1008CQ820KTT	82 @ 50MHz	±10% (K)	±5% (J)	80 @ 350MHz	1060	0.16	1100
PE-1008CQ101KTT	100 @ 50MHz	±10% (K)	±5% (J)	62 @ 350MHz	820	0.16	1000
PE-1008CQ121KTT	120 @ 50MHz	±10% (K)	±5% (J)	62 @ 350MHz	800	0.17	1000
PE-1008CQ151KTT	150 @ 50MHz	±10% (K)	±5% (J)	60 @ 350MHz	750	0.21	950
PE-1008CQ181KTT	180 @ 50MHz	±10% (K)	±5% (J)	40 @ 350MHz	720	0.23	920
PE-1008CQ221KTT	220 @ 50MHz	±10% (K)	±5% (J)	35 @ 350MHz	680	0.29	900
PE-1008CQ271KTT	270 @ 50MHz	±10% (K)	±5% (J)	35 @ 350MHz	600	0.55	600
PE-1008CQ331KTT	330 @ 50MHz	±10% (K)	±5% (J)	35 @ 100MHz	550	0.60	550
PE-1008CQ391KTT	390 @ 50MHz	±10% (K)	±5% (J)	35 @ 350MHz	500	0.82	470

Notes:
1. Inductance measured using a HP4191A RF Impedance Analyzer.
2. Q measured using a HP4291A RF Impedance Analyzer with a HP16193A Test Fixture.
3. SRF measured using a HP8753C Network Analyzer.
4. R_{DC} measured using a Valhalla Scientific model 4100 ATC Digital Ohmmeter.
5. Based on a 15ºC maximum temperature rise.
6. Component Weight: 0.032 grams typical.

WIRE-WOUND RF CHIP INDUCTORS - 1008CQ SERIES

Typical Q vs Frequency

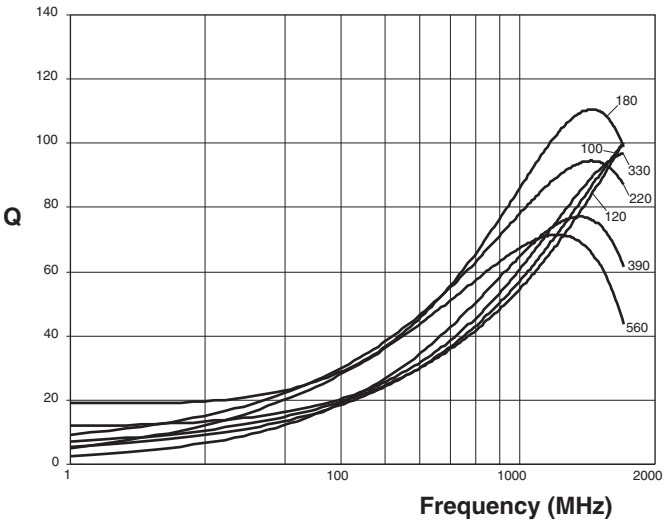

Typical Inductance vs Frequency

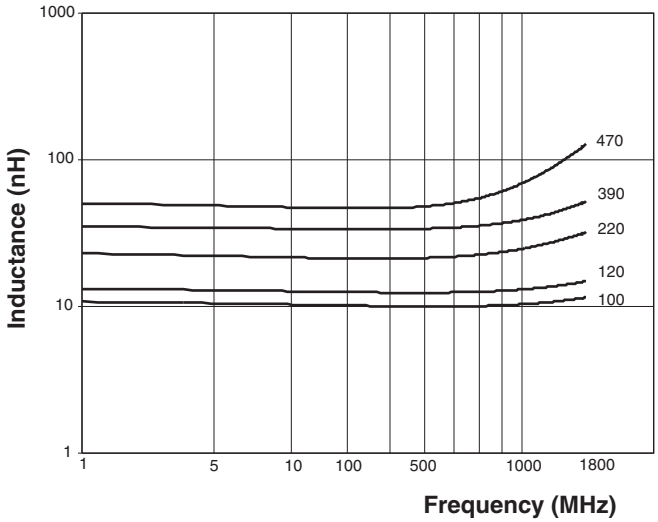

Mechanical

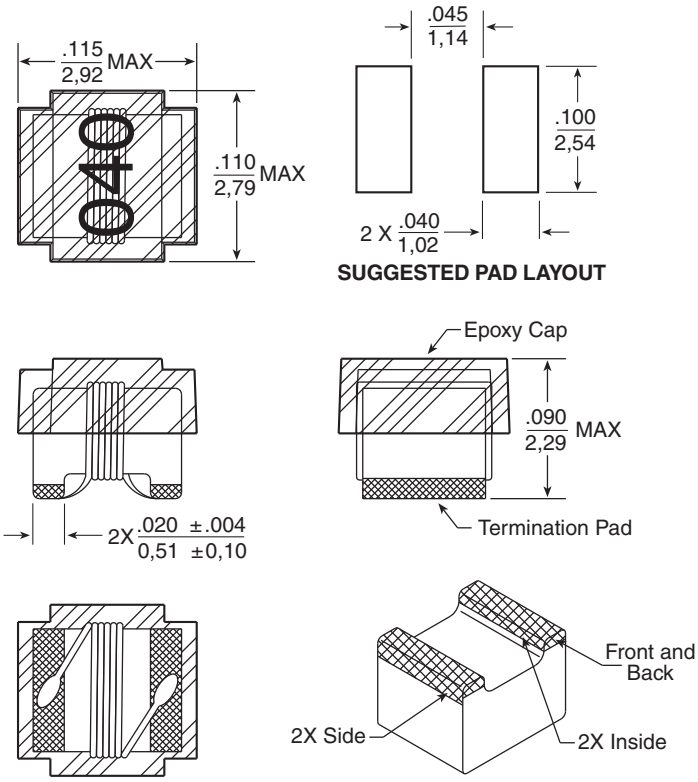

Dimensions: Inches / mm

Unless otherwise specified all tolerances are ± .010 / 0,25

WIRE-WOUND RF CHIP INDUCTORS - 1206CD SERIES

Pulse
A TECHNITROL COMPANY

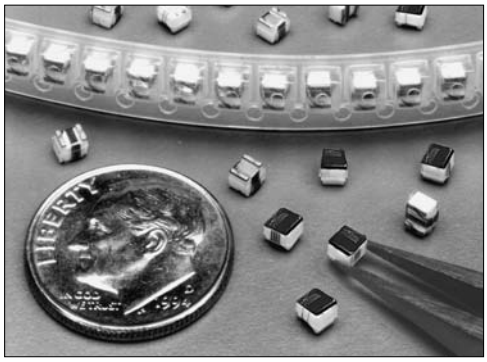

RoHS COMPLIANT

- Wirewound ceramic core construction
- High Q values and self-resonant frequency
- Industry standard 1206 (3216) SMT land pattern

See page 3 for Competition Cross Reference

Electrical Specifications @ 25°C

Part Number	Inductance[1] (nH)	Standard Tolerance	Optional Tolerance	Q[2] (MIN)	SRF Min[3] (MHz MIN)	R_{DC}[4] (Ω MAX)	I_{DC}[5] (mA MAX)
PE-1206CD030KTT	3.3 @ 100MHz	±10% (K)	±5% (J), ±2% (G)	30 @ 300MHz	6200	0.05	1000
PE-1206CD060KTT	6.8 @ 100MHz	±10% (K)	±5% (J), ±2% (G)	30 @ 300MHz	5500	0.07	1000
PE-1206CD100KTT	10 @ 100MHz	±10% (K)	±5% (J), ±2% (G)	40 @ 300MHz	4000	0.08	1000
PE-1206CD120KTT	12 @ 100MHz	±10% (K)	±5% (J), ±2% (G)	40 @ 300MHz	3200	0.08	1000
PE-1206CD150KTT	15 @ 100MHz	±10% (K)	±5% (J), ±2% (G)	40 @ 300MHz	3200	0.10	1000
PE-1206CD180KTT	18 @ 100MHz	±10% (K)	±5% (J), ±2% (G)	50 @ 300MHz	2800	0.10	1000
PE-1206CD220KTT	22 @ 100MHz	±10% (K)	±5% (J), ±2% (G)	50 @ 300MHz	2200	0.10	1000
PE-1206CD270KTT	27 @ 100MHz	±10% (K)	±5% (J), ±2% (G)	50 @ 300MHz	1800	0.11	1000
PE-1206CD330KTT	33 @ 100MHz	±10% (K)	±5% (J), ±2% (G)	55 @ 300MHz	1800	0.11	1000
PE-1206CD390KTT	39 @ 100MHz	±10% (K)	±5% (J), ±2% (G)	55 @ 300MHz	1800	0.12	1000
PE-1206CD470KTT	47 @ 100MHz	±10% (K)	±5% (J), ±2% (G)	55 @ 300MHz	1500	0.13	1000
PE-1206CD560KTT	56 @ 100MHz	±10% (K)	±5% (J), ±2% (G)	55 @ 300MHz	1450	0.14	1000
PE-1206CD680KTT	68 @ 100MHz	±10% (K)	±5% (J), ±2% (G)	55 @ 300MHz	1200	0.26	900
PE-1206CD820KTT	82 @ 100MHz	±10% (K)	±5% (J), ±2% (G)	55 @ 300MHz	1200	0.21	900
PE-1206CD101KTT	100 @ 100 MHz	±10% (K)	±5% (J), ±2% (G)	55 @ 300MHz	1100	0.26	850
PE-1206CD121KTT	120 @ 100MHz	±10% (K)	±5% (J), ±2% (G)	60 @ 300MHz	1100	0.26	800
PE-1206CD151KTT	150 @ 100MHz	±10% (K)	±5% (J), ±2% (G)	60 @ 300MHz	950	0.31	750
PE-1206CD181KTT	180 @ 50MHz	±10% (K)	±5% (J), ±2% (G)	60 @ 300MHz	900	0.43	700
PE-1206CD221KTT	220 @ 50MHz	±10% (K)	±5% (J), ±2% (G)	60 @ 300MHz	760	0.50	670
PE-1206CD271KTT	270 @ 50MHz	±10% (K)	±5% (J), ±2% (G)	55 @ 300MHz	730	0.56	630
PE-1206CD331KTT	330 @ 50MHz	±10% (K)	±5% (J), ±2% (G)	45 @ 150MHz	650	0.62	590
PE-1206CD391KTT	390 @ 50MHz	±10% (K)	±5% (J), ±2% (G)	45 @ 150MHz	600	0.75	530
PE-1206CD471KTT	470 @ 50MHz	±10% (K)	±5% (J), ±2% (G)	45 @ 150MHz	550	1.30	490
PE-1206CD561KTT	560 @ 35MHz	±10% (K)	±5% (J), ±2% (G)	45 @ 150MHz	470	1.34	460
PE-1206CD621KTT	620 @ 35MHz	±10% (K)	±5% (J), ±2% (G)	45 @ 150MHz	470	1.58	430
PE-1206CD681KTT	680 @ 35MHz	±10% (K)	±5% (J), ±2% (G)	45 @ 150MHz	450	1.58	430
PE-1206CD751KTT	750 @ 35MHz	±10% (K)	±5% (J), ±2% (G)	45 @ 150MHz	440	2.25	400
PE-1206CD821KTT	820 @ 35MHz	±10% (K)	±5% (J), ±2% (G)	45 @ 150MHz	420	1.82	400
PE-1206CD911KTT	910 @ 35MHz	±10% (K)	±5% (J), ±2% (G)	45 @ 150MHz	410	2.95	400
PE-1206CD102KTT	1000 @ 35MHz	±10% (K)	±5% (J), ±2% (G)	45 @ 150MHz	400	2.80	320
PE-1206CD122KTT	1200 @ 35MHz	±10% (K)	±5% (J), ±2% (G)	45 @ 150MHz	380	3.20	300

Notes:
1. Inductance measured using a HP4286A RF Impedance Analyzer.
2. Q measured using a HP4291A RF Impedance Analyzer with a HP16193A Test Fixture.
3. SRF measured using a HP8753C Network Analyzer.
4. R_{DC} measured using a Valhalla Scientific model 4100 ATC Digital Ohmmeter.
5. Based on a 15°C maximum temperature rise.
6. Sample Kit Part Number: **PE-1206CD KIT-T**
7. Component Weight: 0.035 grams typical.
8. These components are 0.060" in height.

WIRE-WOUND RF CHIP INDUCTORS - 1206CD SERIES

Typical Q vs Frequency

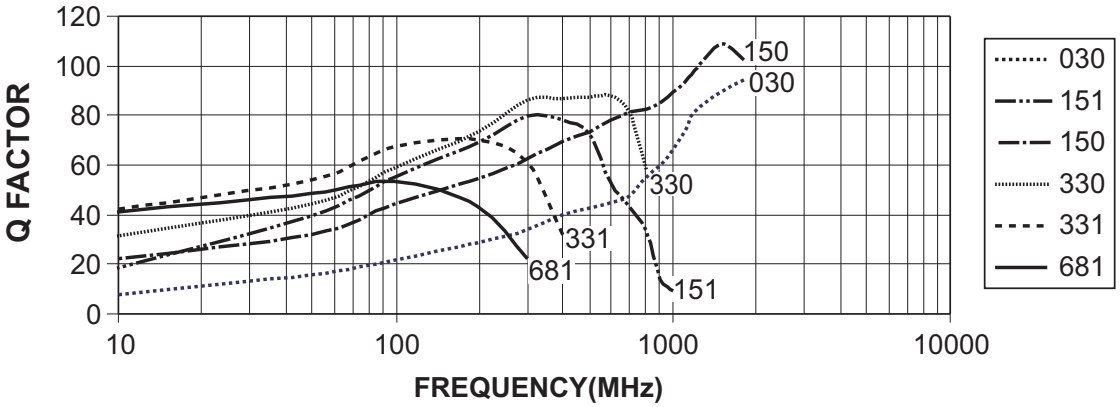

Typical Inductance vs Frequency

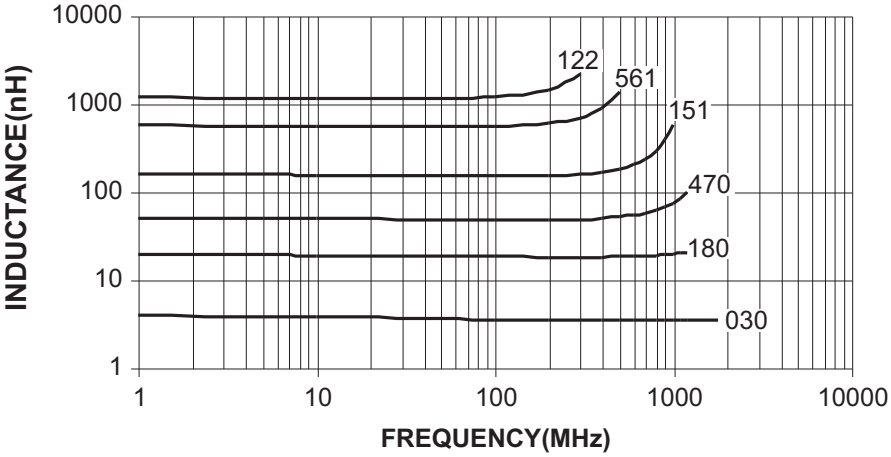

Mechanical

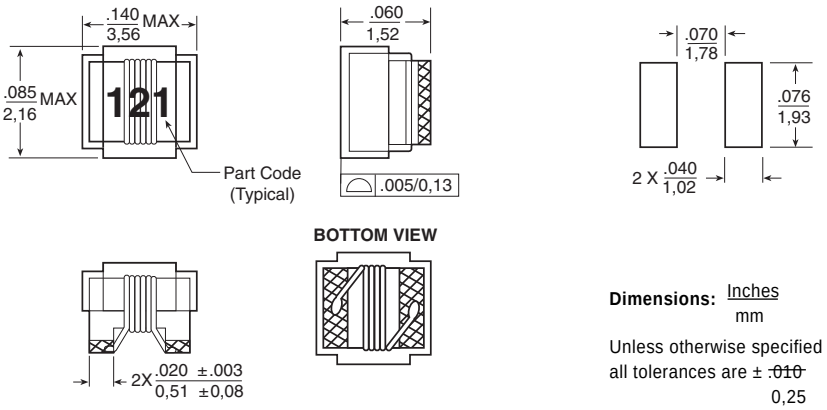

WIRE-WOUND RF CHIP INDUCTORS

Application Notes

The Basics of Wire-Wound Chip Inductors

Pulse currently supplies high quality magnetic products to companies such as 3COM, Cisco, Ericsson, Intel, Marconi, Nokia and Nortel and has been active in the field of RF engineering, since the launch of its first wire-wound 1008 chip product in 1982. Pulse now offers seven ranges of wire-wound chip from 0402 to 1206 (see table 1.0 below): the "CD Range" with 100% compatibility to other market leaders, and the "CM and CQ ranges" with improved electrical performance or alternative inductance values with a ceramic core construction; the FT series with a Ferrite core construction.

In recent years, Pulse has leveraged its strength within the Telecoms and Networking industry to extend its product range to encompass RF products for the Cable Modem, CATV, MMDS and TETRA markets. Pulse now also offers Wide Bandwidth RF Transformers, Splitter Combiners, Couplers, Diplexers, Low Pass Filters and High Power Impedance Matching Transformers. To explore the complete range of RF products, visit the Pulse website: **http://www.pulseeng.com./Products/finder/rf_hfc_cable.htm for cable products** *and* **http://www.pulseeng.com/scripts/finder/rfind/mcis.cfm for RF chip inductors.**

Pulse Part No.	Inductance Range (nH)	Number of Values	Tolerance Range	Availability
PE-0402CD	1.0 ~ 120	48	2, 5 & 10%	In Mass Production
PE-0603CD	1.6 ~ 390	55	2, 5 & 10%	In Mass Production
PE-0805CD	2.8 ~ 1500	40	1, 2, 5 & 10%	In Mass Production
PE-0805CM	3.3 ~ 820	27	2, 5 & 10%	In Mass Production
PE-0805FT	1000 ~ 68000	12	5 & 10%	In Mass Production
PE-1008CD	4.0 ~ 8200	71	1, 2, 5 & 10%	In Mass Production
PE-1008CM	4.7 ~ 4700	40	2, 5 & 10%	In Mass Production
PE-1008CQ	3.0 ~ 390	19	5 & 10%	In Mass Production
PE-1206CD	3.3 ~ 1200	31	2, 5 & 10%	In Mass Production

Table 1.0 Pulse Chip Inductor Product Range

Competing Chip Inductor Types

Capacitor and resistors are available in a wide variety of sizes and component values and it is possible to purchase almost any value, tolerance or other rating. Inductors, on the other hand, are not so readily available and engineers may find it necessary to wind their own inductors to get a specific value of inductance.

There are mainly 3 varieties of inductor in common use today and they are wire-wound, multi-layer and drum core chip inductors. The primary differences between these competing types are the core material used to enhance the inductance of coil and the construction method. Wire is wound around a ceramic or ferrite bobbin or in the case of multi-layer the coil is formed by interconnecting layers of conductive material printed on a ceramic substrate.

Table 2.0 indicates that the performance merits of wire-wound inductors versus the alternative multi-layer and drum core platforms. If price were the only consideration then, of course, there would be no market available for wire-wound chip inductors. But price is not the only consideration, since RF engineers must also consider the needs of the application in terms of Q factor, Idc (maximum current carrying capacity). Rdc (resistance at dc), Tolerance and SRF (self-resonant or series resonant frequency).

SMT	Technology	Material Substrate	Q Factor	SRF	Idc	Tolerance
Chip Inductor	Wire-wound	Ceramic	High	High	High	Good
Chip Inductor	Wire-wound	Ferrite	Low	Low	High	Poor
Multi-layer	Printed	Ceramic	Low	Low	Low	Poor
Drum Core	Wire-wound	Ferrite	Low	Low	Low	Poor

Table 2.0 Summary of Chip Inductor Relative Performance

The Inductor Basics

An inductor is formed by winding a wire around a ceramic or ferrite core to increase the magnetic flux linkage between the turns of the coil. The majority of high frequency inductors above 50MHz are formed on a ceramic bobbin or substrate. Nonmagnetic cores (ceramic cores) have the opposite effect to a magnetic core in that they reduce instead of increase the inductance of the coil. Ceramic cores are mainly used to reduce the RF core losses as the high frequency currents mainly flow near the surface of the conductor. The resistance that a conductor offers to the high frequency alternating current is much greater than the resistance of the same conductor to direct current (dc) and is known as the skin effect. The skin effect is a characteristic of conductors that carry alternating current and is much more pronounced in coils than in straight conductors.

Skin effect causes the current in the conductor to be much denser near the surface of the conductor than at its centre. Consequentially, as the instantaneous value of the alternating current changes the inductance of a conductor in its interior is much greater than the instantaneous inductance near its surface. The result is more current flows near the surface or "skin" of the conductor than at its centre. Since the inductance of the coil increases proportionally to the increasing frequency, the skin effect also increases as the frequency is increased.

Another source of loss is the dielectric material used to form the body of the inductor. There is no perfect insulator and so dielectric losses can not be avoided at very high frequencies. Dielectric losses, like skin effect also tend to increase the effective resistance of a coil at high frequencies.

Whilst there is no perfect component compared to a resistor or capacitor, inductors are probably the component most prone to changing its performance over frequency. Figure 1.0 illustrates what a real world inductor looks like at RF frequencies and the resultant equivalent circuit.

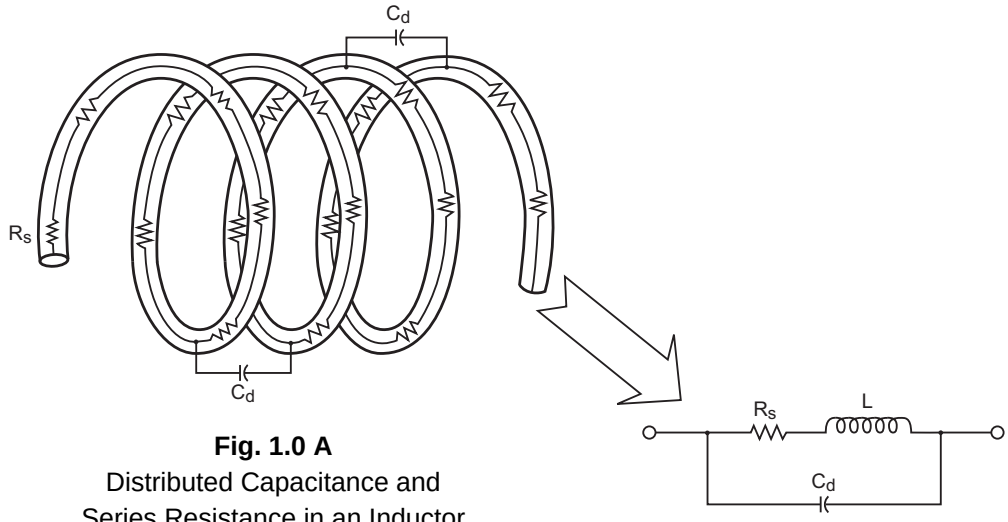

Fig. 1.0 A
Distributed Capacitance and Series Resistance in an Inductor

Fig. 1.0 B
Equivalent Circuit of an Inductor

Fig. 1.0 A shows how capacitive coupling (Cd) can occur between two wires, when the wires are placed in close proximity to one another and only separated by a dielectric. The resistance (Rs) is a representation of the wire resistance that exists in a wire. **Fig. 1.0 B** shows a representation of the lumped resistive, capacitive and inductive component elements of an inductor.

The Inductor Basics *(continued)*

The effect of Cd can have a dramatic effect upon the impedance of the inductor as illustrated in Fig 2.0, because "fringe" effects become dominant at high frequencies. At low frequencies the inductor's reactance parallels that of an ideal inductor. With increasing frequency the reactance of the inductor departs from the ideal curve and increases at a much faster rate until it reaches a peak value at the inductor's parallel resonant frequency (Fr). Above Fr the inductor's reactance begins to decrease with increasing frequency and thus the inductor begins to look like a capacitor. The series resistance (Rs) of the coil prevents the impedance of the inductor from reaching infinity at resonance (Fr). Another effect of Rs is to broaden the resonant peak of the impedance curve at Fr.

Comparisons made between inductors at near to Fr will produce an inaccurate representation of the inductor's performance. This can lead to problems in the end application since the performance of one inductor to another may vary quite markedly since the performance of the inductor is dominated by the parasitic content (distributed capacitance Cd) of the inductor.

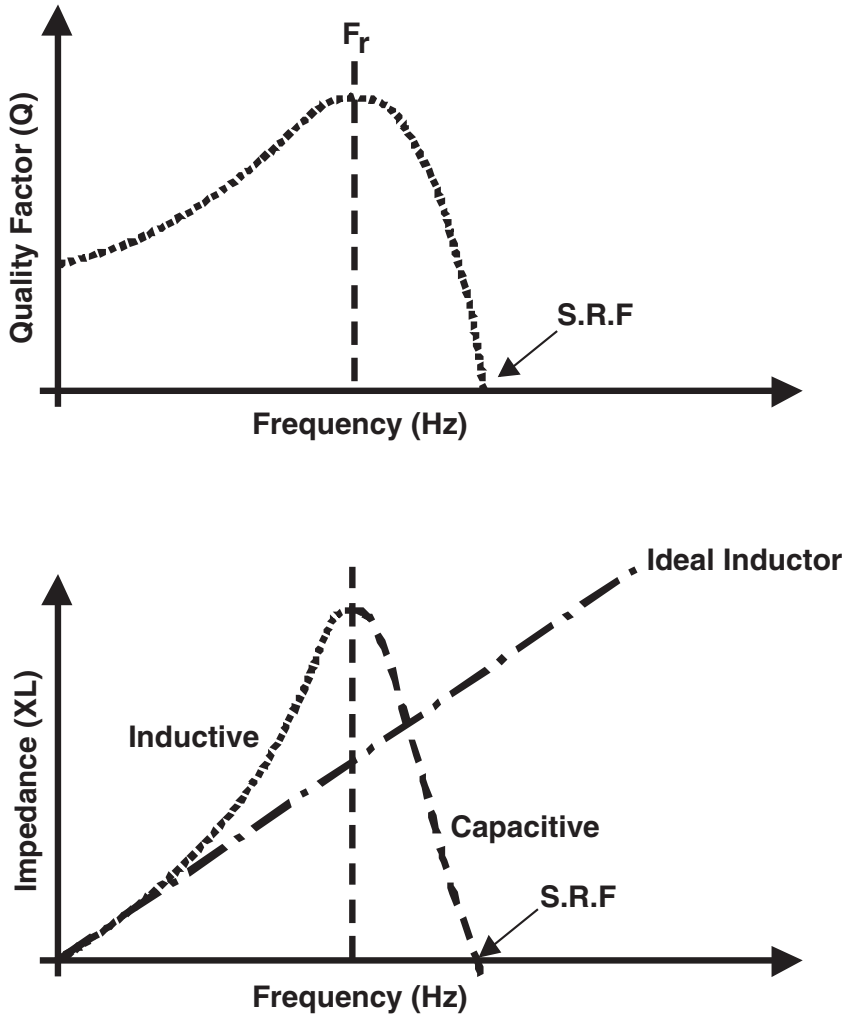

Fig. 2.0 Impedance and Inductance Characteristic of a Real World Inductor

Q factor / SRF

The ratio of an inductor's reactance (XL) to its series resistance (Rs) is often used as measure of the quality factor of the inductor. The larger the ratio, the better the inductor. The quality factor of an inductor is often referred to as the Q of the inductor. If the inductor were constructed from a perfect conductor (zero loss), its Q would be infinite. Of course this is impossible, and so the Q of an inductor will always have some finite value.

The Q factor, Fr and SRF of an inductor are directly linked to one another. If the test frequency is near Fr or SRF, the inductor results may be misleading by very wide margins, since the result is dominated by distributed capacitance reactance. To overcome this problem, the test frequency of the inductor is normally located at a point on the inductor's curve where the reactance of the inductor approaches that of an ideal inductor, so that component to component variations are kept to a minimum since the parasitic contribution is also at a minimum. To overcome this problem, RF engineers should select an inductor with the highest test frequency possible to guarantee the quality of the inductor.

At low frequencies, the Q of an inductor is very good because the only resistance in the winding is the dc resistance of the wire which is very small (Fig. 2.0). As mentioned earlier, as the frequency increases, the skin effect increases to degrade the Q of the inductor. At low frequencies, the Q increases directly inline with the reactance (XL) since the skin effect has not become noticeable. The Q continues to rise, but as the frequency approaches Fr, the skin effect starts to become a dominant, reducing the rate of increase. At Fr, the series resistance and reactance are increasing at the same rate. Above Fr, the distributed capacitance Cd and skin effect of the winding combine together to decrease the Q of the inductor to zero at SRF.

Understanding Inductor Curves

RF design engineers require inductors to meet the following requirements:

1. Low cost
2. Compatibility to the competition
   - Q, SRF and useable frequency range => competition
3. Component to component variation small
4. Performance approachs that of an ideal inductor
   - High Q (low series resistance)
   - High SRF (low distributed capacitance)

	Ideal Inductor		Real World Inductor	
Distributed Capacitance	Cd = 0	Infinite SRF	Cd = Min	High SRF High Fr
Series resistor	Rs = 0	Infinite Q	Rs = Min	High Q High Fr

3.0 Characteristics of a Real World Inductor Vs Ideal Inductor

Determining the Inductor Equivalent Circuit

To determine the inductor equivalent circuit, an RF engineer must deduce the value of Rs and Cd from the curves supplied by the inductor manufacturer. To do this, the following equations can be used. Of course, the values deduced only apply at one specific frequency. The recommended frequency at which the inductor is used within the application should be an order of magnitude (÷ 10) below the SRF, and preferably not near than ½ Fr.

Equation 1: $Fc < \frac{SRF}{10}$ and/or $< \frac{FR}{2}$

Equation 2: $Rs = \frac{XL}{Q} = \frac{2 * \pi * Fc * L}{Q}$

Equation 3: $Cd = \frac{1}{(2 * \pi * SRF)2 * L}$

Where:

Fc = Centre frequency of application / intended operation
SRF = Series resonant or self resonant frequency of the inductor
π = 3.14159
L = Inductor value

WIRE-WOUND
RF CHIP INDUCTORS
Sales Offices

Pulse Worldwide Headquarters
12220 World Trade Dr.
San Diego, CA 92128
U.S.A.

www.pulseeng.com
Tel: 858 674 8100

Pulse Europe
Einsteinstrasse
1D-71083 Herrenberg
Germany

Tel: 49 7032 7806 0

Pulse China Headquarters
B402, Shenzhen Academy of
Aerospace Technology Bldg.
10th Kejinan Rd.
High-Tech Zone
Nanshan District
Shenzen, PR China 518057
TEL: 86 755 33966678

Pulse North China
Room 1503
XinYin Building
No. 888 YiShan Rd.
Shanghai 200233
China

Tel: 86 21 54643211/2

Pulse South Asia
135 Joo Seng Rd.
#03-02
PM Industrial Bldg.
Singapore 368363

TEL: 65 6287 8998

Pulse North Asia
No. 26, Kao Ching Rd.
Yang Mei Chen
Taoyuan Hsien
Taiwan
R. O. C.

Tel: 886 3 4643715

Performance warranty of products offered on this data sheet is limited to the parameters specified. Data is subject to change without notice. Other brand and product names mentioned herein may be trademarks or registered trademarks of their respective owners.

Компания «ЭлектроПласт» предлагает заключение долгосрочных отношений при поставках импортных электронных компонентов на взаимовыгодных условиях!

Наши преимущества:

- Оперативные поставки широкого спектра электронных компонентов отечественного и импортного производства напрямую от производителей и с крупнейших мировых складов;
- Поставка более 17-ти миллионов наименований электронных компонентов;
- Поставка сложных, дефицитных, либо снятых с производства позиций;
- Оперативные сроки поставки под заказ (от 5 рабочих дней);
- Экспресс доставка в любую точку России;
- Техническая поддержка проекта, помощь в подборе аналогов, поставка прототипов;
- Система менеджмента качества сертифицирована по Международному стандарту ISO 9001;
- Лицензия ФСБ на осуществление работ с использованием сведений, составляющих государственную тайну;
- Поставка специализированных компонентов (Xilinx, Altera, Analog Devices, Intersil, Interpoint, Microsemi, Aeroflex, Peregrine, Syfer, Eurofarad, Texas Instrument, Miteq, Cobham, E2V, MA-COM, Hittite, Mini-Circuits,General Dynamics и др.);

Помимо этого, одним из направлений компании «ЭлектроПласт» является направление «Источники питания». Мы предлагаем Вам помощь Конструкторского отдела:

- Подбор оптимального решения, техническое обоснование при выборе компонента;
- Подбор аналогов;
- Консультации по применению компонента;
- Поставка образцов и прототипов;
- Техническая поддержка проекта;
- Защита от снятия компонента с производства.

Как с нами связаться

Телефон: 8 (812) 309 58 32 (многоканальный)
Факс: 8 (812) 320-02-42
Электронная почта: org@eplast1.ru
Адрес: 198099, г. Санкт-Петербург, ул. Калинина, дом 2, корпус 4, литера А.