Teccor® brand Thyristors

20 / 25 Amp Standard SCRs

Littelfuse®
Expertise Applied | Answers Delivered

Sxx20x & Sxx25x Series

RoHS

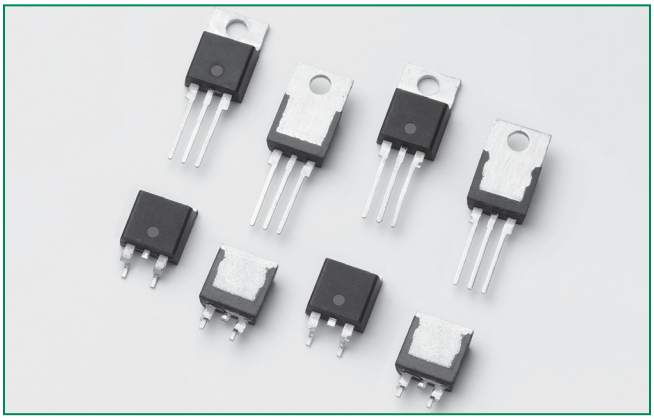

Description

Excellent unidirectional switches for phase control applications such as heating and motor speed controls.

Standard phase control SCRs are triggered with few milliamperes of current at less than 1.5V potential.

Features & Benefits

- RoHS compliant
- Glass – passivated junctions
- Voltage capability up to 1000 V
- Surge capability up to 350 A

Applications

Typical applications are AC solid-state switches, industrial power tools, exercise equipment, white goods and commercial appliances.

Internally constructed isolated packages are offered for ease of heat sinking with highest isolation voltage.

Agency Approval

Agency	Agency File Number
®	L Package: E71639

Main Features

Symbol	Value	Unit
$I_{T(RMS)}$	20 & 25	A
V_{DRM}/V_{RRM}	400 to 1000	V
I_{GT}	30 to 35	mA

Schematic Symbol

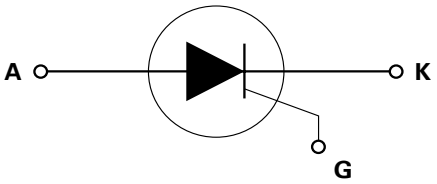

Additional Information

Datasheet | Resources | Samples

Absolute Maximum Ratings — 20A SCR

Symbol	Parameter	Test Conditions		Value	Unit
$I_{T(RMS)}$	RMS on-state current	T_C = 80°C		20	A
$I_{T(AV)}$	Average on-state current	Sxx20x	T_C = 80°C	12.8	A
I_{TSM}	Peak non-repetitive surge current	single half cycle; f = 50Hz; T_J (initial) = 25°C		255	A
		single half cycle; f = 60Hz; T_J (initial) = 25°C		300	
I^2t	I^2t Value for fusing	t_p = 8.3 ms		374	A^2s
di/dt	Critical rate of rise of on-state current	f = 60Hz ; T_J = 125°C		125	A/µs
I_{GM}	Peak gate current	T_J = 125°C		3	A
$P_{G(AV)}$	Average gate power dissipation	T_J = 125°C		0.6	W
T_{stg}	Storage temperature range			-40 to 150	°C
T_J	Operating junction temperature range			-40 to 125	°C

© 2014 Littelfuse, Inc.
Specifications are subject to change without notice.
Revised: 12/14/14

Absolute Maximum Ratings — 25A SCR

Symbol	Parameter	Test Conditions		Value	Unit
$I_{T(RMS)}$	RMS on-state current	Sxx25L: T_C=75°C		25	A
		Sxx25R/Sxx25N: T_C=100°C			
$I_{T(AV)}$	Average on-state current	Sxx25L	T_C = 75°C	16.0	A
		Sxx25R/Sxx25N	T_C = 100°C		
I_{TSM}	Peak non-repetitive surge current	single half cycle; f = 50Hz; T_J (initial) = 25°C		300	A
		single half cycle; f = 60Hz; T_J (initial) = 25°C		350	
I^2t	I^2t Value for fusing	t_p = 8.3 ms		510	A^2s
di/dt	Critical rate of rise of on-state current	f = 60Hz ; T_J = 125°C		150	A/µs
I_{GM}	Peak gate current	T_J = 125°C		3.5	A
$P_{G(AV)}$	Average gate power dissipation	T_J = 125°C		0.8	W
T_{stg}	Storage temperature range			-40 to 150	°C
T_J	Operating junction temperature range			-40 to 125	°C

Electrical Characteristics (T_J = 25°C, unless otherwise specified)

Symbol	Test Conditions			Value		Unit
				Sxx20L	Sxx25x	
I_{GT}	V_D = 12V; R_L = 30Ω		MAX.	30	35	mA
			MIN.	1	1	
V_{GT}			MAX.	1.5		V
dv/dt	V_D = V_{DRM}; gate open; T_J = 100°C	400V	MIN.	450		V/µs
		600V		425		
		800V		400		
		1000V		200		
	V_D = V_{DRM}; gate open; T_J = 125°C	400V		350		
		600V		325		
		800V		300		
V_{GD}	V_D = V_{DRM}; R_L = 3.3 kΩ; T_J = 125°C		MIN.	0.2		V
I_H	I_T = 400mA (initial)		MAX.	40	50	mA
t_q	(1)		MAX.	35		µs
t_{gt}	I_G = 2 x I_{GT}; PW = 15µs; I_T = 40A		TYP.	2		µs

Notes :
xx = voltage, x = package
(1) I_T=2A; t_p=50µs; dv/dt=5V/µs; di/dt=-30A/µs

© 2014 Littelfuse, Inc.
Specifications are subject to change without notice.

Static Characteristics

Symbol	Test Conditions				Value	Unit
V_{TM}	20A Device I_T = 40A; t_p = 380µs			MAX.	1.6	V
	25A Device I_T = 50A; t_p = 380µs					
I_{DRM} / I_{RRM}	V_{DRM} / V_{RRM}	T_J = 25°C	400 – 600V	MAX.	10	µA
			800 – 1000V		20	
		T_J = 100°C	400 – 600V		500	
			800V		1000	
			1000V		3000	
		T_J = 125°C	400 – 600V		1000	
			800V		2000	

Thermal Resistances

Symbol	Parameter		Value	Unit
$R_{\theta(J-C)}$	Junction to case (AC)	Sxx25R / Sxx25N	1.0	°C/W
		Sxx20L	2.4	
		Sxx25L	2.35	
$R_{\theta(J-A)}$	Junction to ambient	Sxx25R	40	°C/W
		Sxx20L / Sxx25L	50	

Note: xx = voltage

Figure 1: Normalized DC Gate Trigger Current vs. Junction Temperature

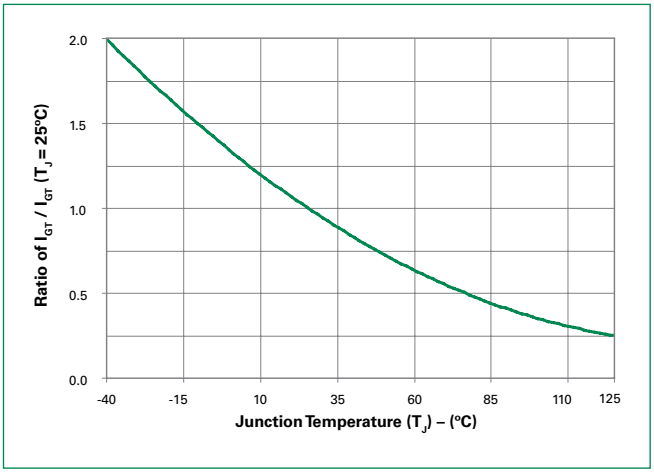

Figure 2: Normalized DC Gate Trigger Voltage vs. Junction Temperature

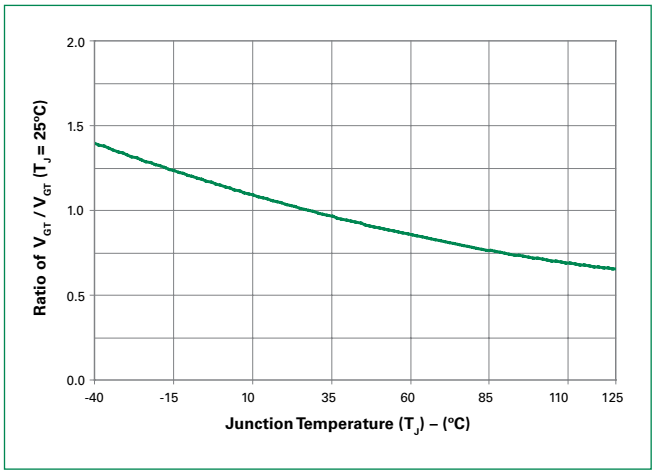

© 2014 Littelfuse, Inc.
Specifications are subject to change without notice.
Revised: 12/14/14

Figure 3: Normalized DC Holding Current vs. Junction Temperature

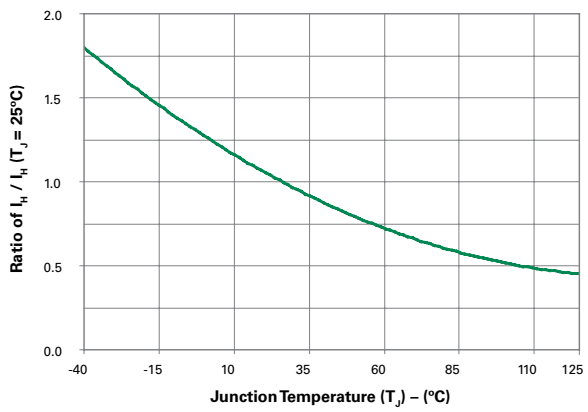

Figure 4: On-State Current vs. On-State Voltage (Typical)

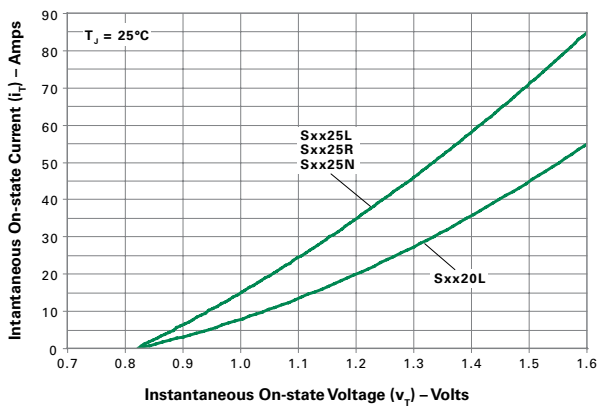

Figure 5: Power Dissipation (Typical) vs. RMS On-State Current

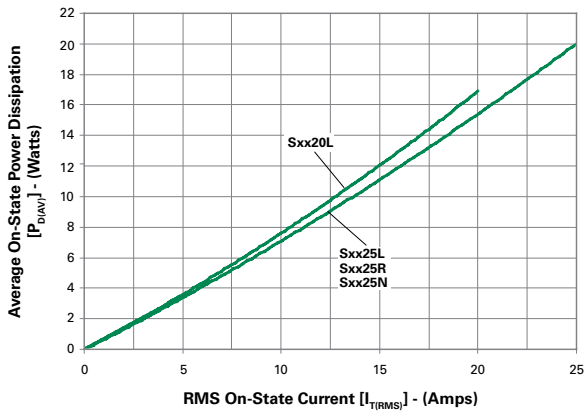

Figure 6: Maximum Allowable Case Temperature vs. RMS On-State Current

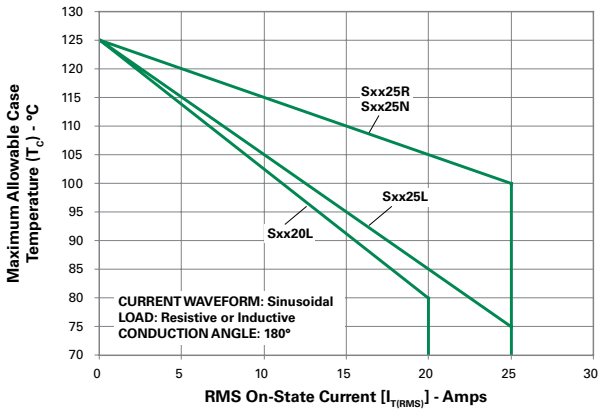

Figure 7: Maximum Allowable Case Temperature vs. Average On-State Current

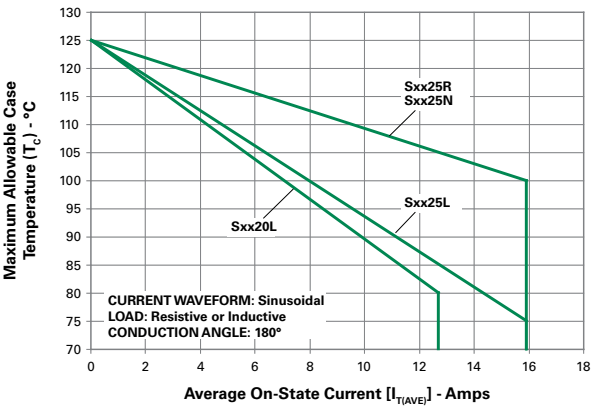

Figure 8: Maximum Allowable Ambient Temperature vs. RMS On-State Current

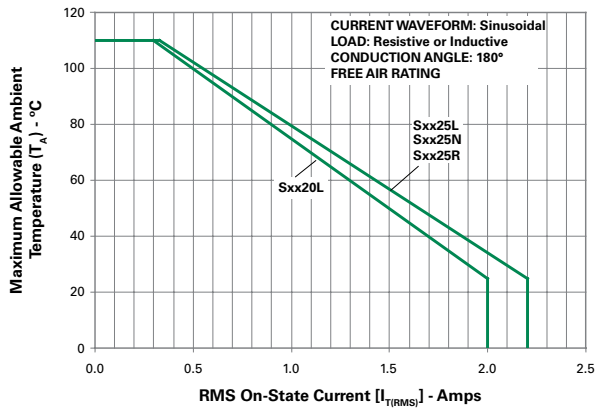

© 2014 Littelfuse, Inc.
Specifications are subject to change without notice.

Figure 9: Maximum Allowable Ambient Temperature vs. Average On-State Current

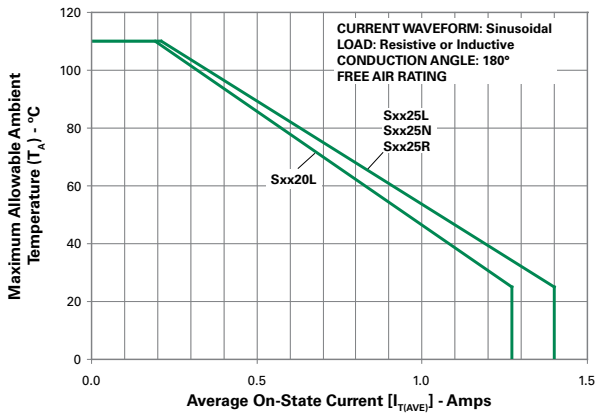

Note: xx = voltage

Figure 10: Peak Capacitor Discharge Current

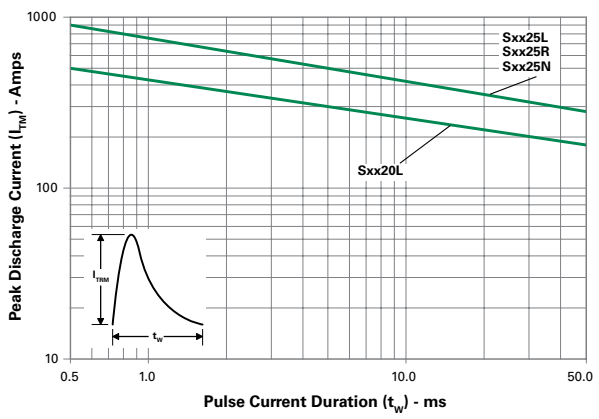

Figure 11: Peak Capacitor Discharge Current Derating

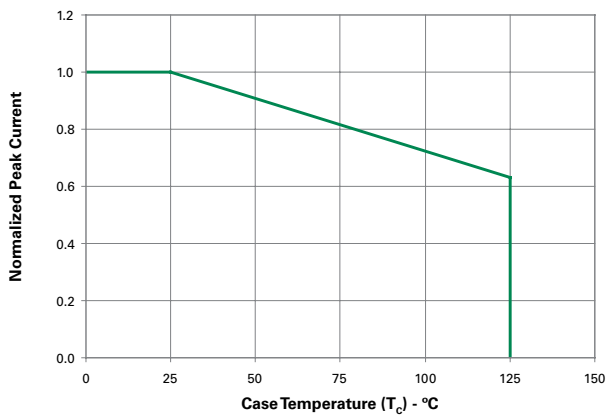

Figure 12: Surge Peak On-State Current vs. Number of Cycles

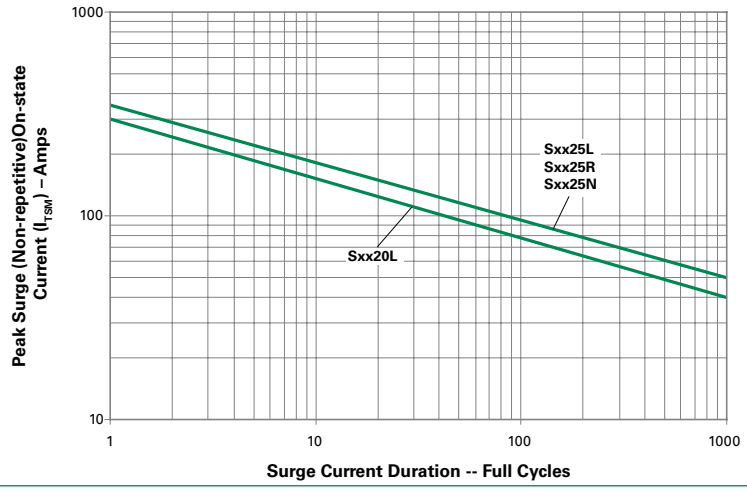

SUPPLY FREQUENCY: 60 Hz Sinusoidal
LOAD: Resistive
RMS On-State Current: [$I_{T(RMS)}$]: Maximum Rated Value at Specified Case Temperature

Notes:
1. Gate control may be lost during and immediately following surge current interval.
2. Overload may not be repeated until junction temperature has returned to steady-state rated value.

© 2014 Littelfuse, Inc.
Specifications are subject to change without notice.

Soldering Parameters

Reflow Condition		Pb – Free assembly
Pre Heat	-Temperature Min ($T_{s(min)}$)	150°C
	-Temperature Max ($T_{s(max)}$)	200°C
	-Time (min to max) (t_s)	60 – 180 secs
Average ramp up rate (Liquidus Temp) (T_L) to peak		5°C/second max
$T_{S(max)}$ to T_L - Ramp-up Rate		5°C/second max
Reflow	-Temperature (T_L) (Liquidus)	217°C
	-Temperature (t_L)	60 – 150 seconds
Peak Temperature (T_P)		$260^{+0/-5}$ °C
Time within 5°C of actual peak Temperature (t_p)		20 – 40 seconds
Ramp-down Rate		5°C/second max
Time 25°C to peak Temperature (T_P)		8 minutes Max.
Do not exceed		280°C

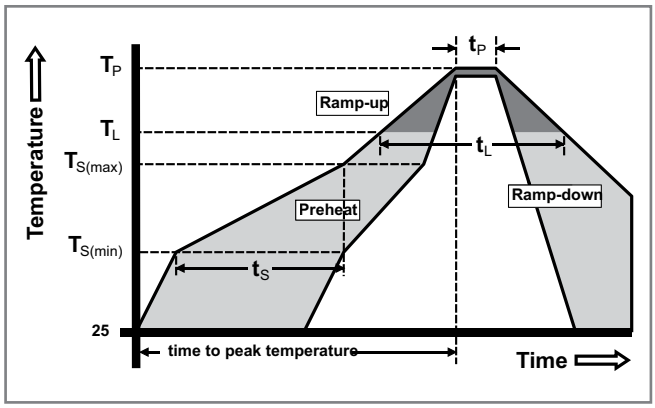

Physical Specifications

Terminal Finish	100% Matte Tin-plated
Body Material	UL recognized epoxy meeting flammability classification 94V-0
Lead Material	Copper Alloy

Design Considerations

Careful selection of the correct device for the application's operating parameters and environment will go a long way toward extending the operating life of the Thyristor. Good design practice should limit the maximum continuous current through the main terminals to 75% of the device rating. Other ways to ensure long life for a power discrete semiconductor are proper heat sinking and selection of voltage ratings for worst case conditions. Overheating, overvoltage (including dv/dt), and surge currents are the main killers of semiconductors. Correct mounting, soldering, and forming of the leads also help protect against component damage.

Environmental Specifications

Test	Specifications and Conditions
AC Blocking	MIL-STD-750, M-1040, Cond A Applied Peak AC voltage @ 125°C for 1008 hours
Temperature Cycling	MIL-STD-750, M-1051, 100 cycles; -40°C to +150°C; 15-min dwell-time
Temperature/ Humidity	EIA / JEDEC, JESD22-A101 1008 hours; 320V - DC: 85°C; 85% rel humidity
High Temp Storage	MIL-STD-750, M-1031, 1008 hours; 150°C
Low-Temp Storage	1008 hours; -40°C
Thermal Shock	MIL-STD-750, M-1056 10 cycles; 0°C to 100°C; 5-min dwelltime at each temperature; 10 sec (max) transfer time between temperature
Autoclave	EIA / JEDEC, JESD22-A102 168 hours (121°C at 2 ATMs) and 100% R/H
Resistance to Solder Heat	MIL-STD-750 Method 2031
Solderability	ANSI/J-STD-002, category 3, Test A
Lead Bend	MIL-STD-750, M-2036 Cond E

© 2014 Littelfuse, Inc.
Specifications are subject to change without notice.

Dimensions — TO-220AB (R-Package) — Non-Isolated Mounting Tab Common with Center Lead

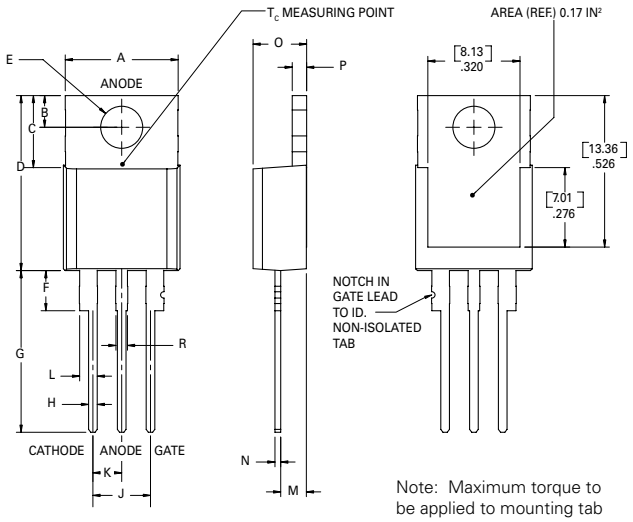

Note: Maximum torque to be applied to mounting tab is 8 in-lbs. (0.904 Nm).

Dimension	Inches		Millimeters	
	Min	Max	Min	Max
A	0.380	0.420	9.65	10.67
B	0.105	0.115	2.67	2.92
C	0.230	0.250	5.84	6.35
D	0.590	0.620	14.99	15.75
E	0.142	0.147	3.61	3.73
F	0.110	0.130	2.79	3.30
G	0.540	0.575	13.72	14.61
H	0.025	0.035	0.64	0.89
J	0.195	0.205	4.95	5.21
K	0.095	0.105	2.41	2.67
L	0.060	0.075	1.52	1.91
M	0.085	0.095	2.16	2.41
N	0.018	0.024	0.46	0.61
O	0.178	0.188	4.52	4.78
P	0.045	0.060	1.14	1.52
R	0.038	0.048	0.97	1.22

Dimensions — TO-220AB (L-Package) — Isolated Mounting Tab

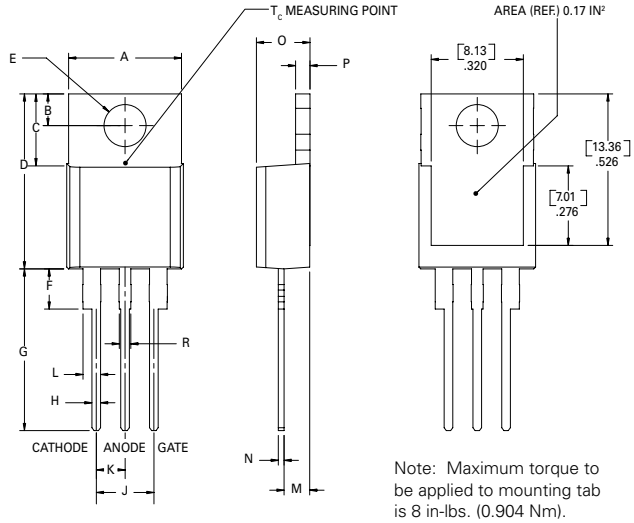

Note: Maximum torque to be applied to mounting tab is 8 in-lbs. (0.904 Nm).

Dimension	Inches		Millimeters	
	Min	Max	Min	Max
A	0.380	0.420	9.65	10.67
B	0.105	0.115	2.67	2.92
C	0.230	0.250	5.84	6.35
D	0.590	0.620	14.99	15.75
E	0.142	0.147	3.61	3.73
F	0.110	0.130	2.79	3.30
G	0.540	0.575	13.72	14.61
H	0.025	0.035	0.64	0.89
J	0.195	0.205	4.95	5.21
K	0.095	0.105	2.41	2.67
L	0.060	0.075	1.52	1.91
M	0.085	0.095	2.16	2.41
N	0.018	0.024	0.46	0.61
O	0.178	0.188	4.52	4.78
P	0.045	0.060	1.14	1.52
R	0.038	0.048	0.97	1.22

© 2014 Littelfuse, Inc.
Specifications are subject to change without notice.
Revised: 12/14/14

Dimensions –TO- 263AB (N-package) — D²-Pak Surface Mount

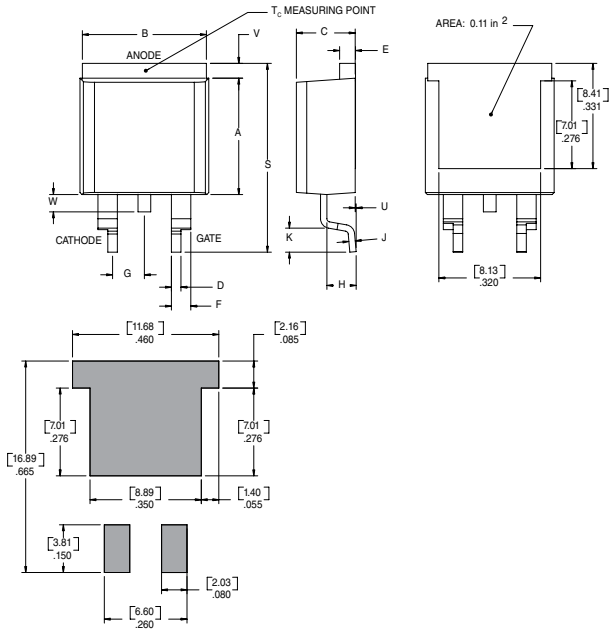

Dimension	Inches		Millimeters	
	Min	Max	Min	Max
A	0.360	0.370	9.14	9.40
B	0.380	0.420	9.65	10.67
C	0.178	0.188	4.52	4.78
D	0.025	0.035	0.64	0.89
E	0.045	0.060	1.14	1.52
F	0.060	0.075	1.52	1.91
G	0.095	0.105	2.41	2.67
H	0.092	0.102	2.34	2.59
J	0.018	0.024	0.46	0.61
K	0.090	0.110	2.29	2.79
S	0.590	0.625	14.99	15.88
V	0.035	0.045	0.89	1.14
U	0.002	0.010	0.05	0.25
W	0.040	0.070	1.016	1.78

Product Selector

Part Number	Voltage				Gate Sensitivity	Type	Package
	400V	600V	800V	1000V			
Sxx20L	X	X	X	X	30mA	Standard SCR	TO-220L
Sxx25L	X	X	X	X	35mA	Standard SCR	TO-220L
Sxx25R	X	X	X	X	35mA	Standard SCR	TO-220R
Sxx25N	X	X	X	X	35mA	Standard SCR	TO-263

Note: xx = Voltage

Packing Options

Part Number	Marking	Weight	Packing Mode	Base Quantity
Sxx20L	Sxx20L	2.2g	Bulk	500
Sxx20LTP	Sxx20L	2.2g	Tube	500 (50 per tube)
Sxx25L	Sxx25L	2.2g	Bulk	500
Sxx25LTP	Sxx25L	2.2g	Tube	500 (50 per tube)
Sxx25R	Sxx25R	2.2g	Bulk	500
Sxx25RTP	Sxx25R	2.2g	Tube	500 (50 per tube)
Sxx25NTP	Sxx25N	1.6g	Tube	500 (50 per tube)
Sxx25NRP	Sxx25N	1.6g	Embossed Carrier	500

Note: xx = Voltage

© 2014 Littelfuse, Inc.
Specifications are subject to change without notice.

TO-263 Embossed Carrier Reel Pack (RP) Specifications

Meets all EIA-481-2 Standards

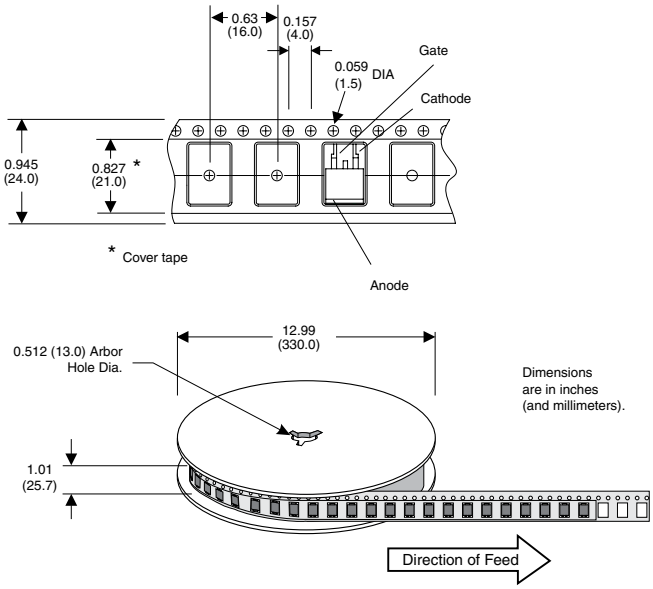

Part Numbering System

S 60 20 L 56

DEVICE TYPE
S: SCR

VOLTAGE RATING
40: 400V
60: 600V
80: 800V
K0: 1000V

CURRENT RATING
20: 20A
25: 25A

PACKAGE TYPE
L: TO-220 Isolated
R: TO-220 Non-Isolated
N: TO-263 (D²-Pak)

SENSITIVITY & TYPE
(blank): Sxxx20L = 30mA
Sxxx25x = 35mA

LEAD FORM DIMENSIONS
xx: Lead Form Option

Part Marking System

TO-220 AB - (L and R Package)
TO-263 AB - (N Package)

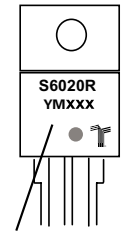

Date Code Marking
Y: Year Code
M: Month Code
XXX: Lot Trace Code

© 2014 Littelfuse, Inc.
Specifications are subject to change without notice.
Revised: 12/14/14

Компания «ЭлектроПласт» предлагает заключение долгосрочных отношений при поставках импортных электронных компонентов на взаимовыгодных условиях!

Наши преимущества:

- Оперативные поставки широкого спектра электронных компонентов отечественного и импортного производства напрямую от производителей и с крупнейших мировых складов;
- Поставка более 17-ти миллионов наименований электронных компонентов;
- Поставка сложных, дефицитных, либо снятых с производства позиций;
- Оперативные сроки поставки под заказ (от 5 рабочих дней);
- Экспресс доставка в любую точку России;
- Техническая поддержка проекта, помощь в подборе аналогов, поставка прототипов;
- Система менеджмента качества сертифицирована по Международному стандарту ISO 9001;
- Лицензия ФСБ на осуществление работ с использованием сведений, составляющих государственную тайну;
- Поставка специализированных компонентов (Xilinx, Altera, Analog Devices, Intersil, Interpoint, Microsemi, Aeroflex, Peregrine, Syfer, Eurofarad, Texas Instrument, Miteq, Cobham, E2V, MA-COM, Hittite, Mini-Circuits,General Dynamics и др.);

Помимо этого, одним из направлений компании «ЭлектроПласт» является направление «Источники питания». Мы предлагаем Вам помощь Конструкторского отдела:

- Подбор оптимального решения, техническое обоснование при выборе компонента;
- Подбор аналогов;
- Консультации по применению компонента;
- Поставка образцов и прототипов;
- Техническая поддержка проекта;
- Защита от снятия компонента с производства.

Как с нами связаться

Телефон: 8 (812) 309 58 32 (многоканальный)
Факс: 8 (812) 320-02-42
Электронная почта: org@eplast1.ru
Адрес: 198099, г. Санкт-Петербург, ул. Калинина, дом 2, корпус 4, литера А.