SNA-286

DC-6.0 GHz, Cascadable GaAs MMIC Amplifier

Product Description

Sirenza Microdevices SNA-286 is a GaAs monolithic broadband amplifier (MMIC) housed in a low-cost surface-mountable plastic package. At 1950 MHz, this amplifier provides 15.5dB of gain and +14dBm of P1dB power when biased at 50mA.

The use of an external resistor allows for bias flexibility and stability. These unconditionally stable amplifiers are designed for use as general purpose 50 ohm gain blocks.

Also available in chip form (SNA-200), its small size (0.33mm x 0.33mm) and gold metallization make it an ideal choice for use in hybrid circuits.

Output Power vs. Frequency

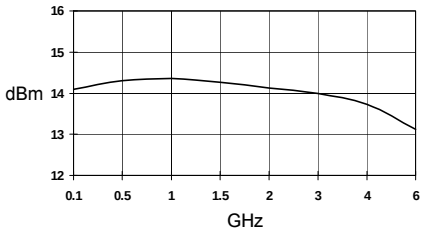

Product Features

- Patented, Reliable GaAsHBT Technology
- Cascadable 50 Ohm Gain Block
- 15dB Gain, +14dBm P1dB
- 1.5:1 Input and Output VSWR
- Operates From Single Supply
- Low Cost Surface Mount Plastic Package

Applications

- PA Driver Amplifier
- Cellular, PCS, GSM, UMTS
- IF Amplifier
- Wireless Data, Satellite

Symbol	Parameter	Units	Frequency	Min.	Typ.	Max.
G_P	Small Signal Power Gain	dB dB dB	850 MHz 1950 MHz 2400 MHz	14.4	16.0 15.5 15.0	17.6
G_F	Gain Flatness	dB	0.1-6 GHz		+/- 1.3	
BW3dB	3dB Bandwidth	GHz			4.5	
P_{1dB}	Output Power at 1dB Compression	dBm	1950 MHz		14.0	
OIP_3	Output Third Order Intercept Point	dBm	1950 MHz		29.0	
NF	Noise Figure	dB	1950 MHz		5.7	
VSWR	Input / Output	-	0.1-6 GHz		1.5:1	
ISOL	Reverse Isolation	dB	0.1-6 GHz		20	
V_D	Device Operating Voltage	V		3.3	3.8	4.3
I_D	Device Operating Current	mA		45	50	55
dG/dT	Device Gain Temperature Coefficient	dB/°C			-0.0018	
R_{TH}, j-l	Thermal Resistance (junction to lead)	°C/W			340	

Test Conditions: V_S = 8 V, R_{BIAS} = 82 Ohms; I_D = 50 mA Typ., T_L = 25ºC; OIP_3 Tone Spacing = 1 MHz, Pout per tone = 0 dBm, $Z_S = Z_L$ = 50 Ohms

The information provided herein is believed to be reliable at press time. Sirenza Microdevices assumes no responsibility for inaccuracies or omissions. Sirenza Microdevices assumes no responsibility for the use of this information, and all such information shall be entirely at the user's own risk. Prices and specifications are subject to change without notice. No patent rights or licenses to any of the circuits described herein are implied or granted to any third party. Sirenza Microdevices does not authorize or warrant any Sirenza Microdevices product for use in life-support devices and/or systems. Copyright 2001 Sirenza Microdevices, Inc.. All worldwide rights reserved.

522 Almanor Ave., Sunnyvale, CA 94085 Phone: (800) SMI-MMIC http://www.sirenza.com

Typical Performance at 25°C (Vds = 3.8V, Ids = 50mA)

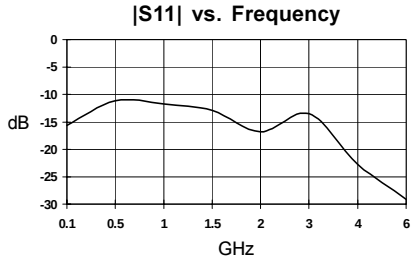

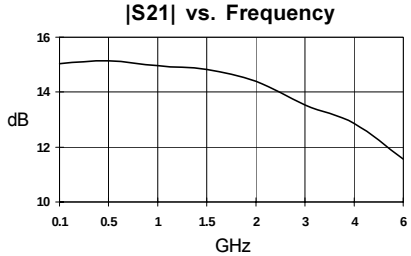

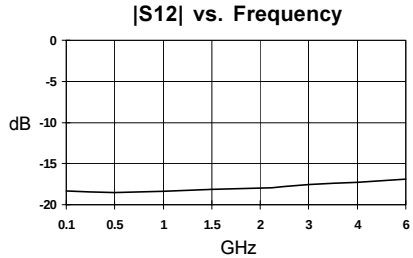

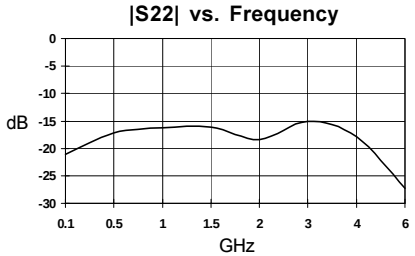

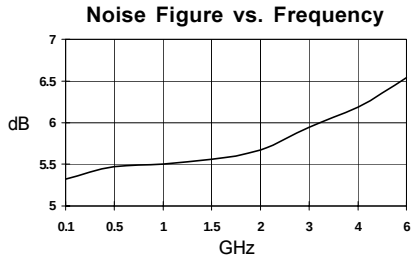

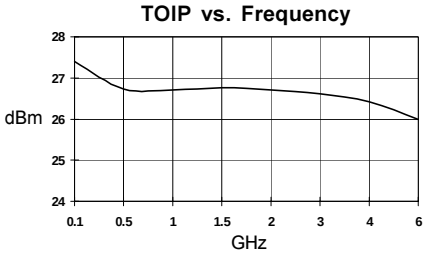

Absolute Maximum Ratings

Parameter	Absolute Limit
Max. Device Current (I_D)	75 mA
Max. Device Voltage (V_D)	6 V
Max. RF Input Power	+10 dBm
Max. Junction Temp. (T_J)	+150°C
Operating Temp. Range (T_L)	-40°C to +85°C
Max. Storage Temp.	+150°C

Operation of this device beyond any one of these limits may cause permanent damage. For reliable continous operation, the device voltage and current must not exceed the maximum operating values specified in the table on page one.

Bias Conditions should also satisfy the following expression:

$I_D V_D < (T_J - T_L) / R_{TH}$, j-l

Typical Application Circuit

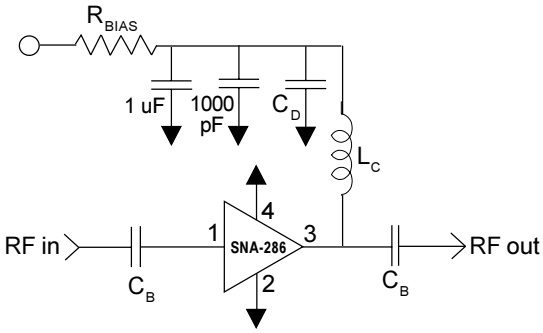

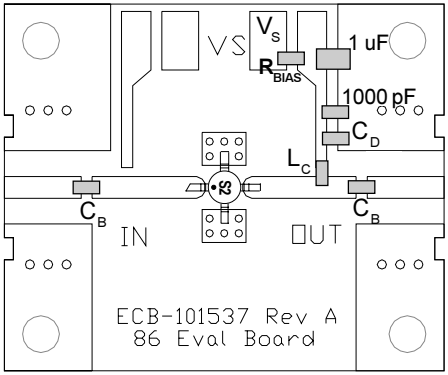

Part Identification Marking

The part will be marked with an "S2" designator on the top surface of the package.

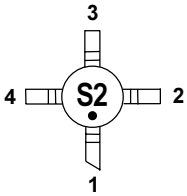

Caution: ESD sensitive

Appropriate precautions in handling, packaging and testing devices must be observed.

Application Circuit Element Values

Reference Designator	Frequency (Mhz)				
	500	850	1950	2400	3500
C_B	220 pF	100 pF	68 pF	56 pF	39 pF
C_D	100 pF	68 pF	22 pF	22 pF	15 pF
L_C	68 nH	33 nH	22 nH	18 nH	15 nH

Recommended Bias Resistor Values for I_D=50mA				
Supply Voltage(V_S)	6 V	8 V	10 V	12 V
R_{BIAS}	43 Ω	82 Ω	120 Ω	160 Ω
Note: R_{BIAS} provides DC bias stability over temperature.				

Mounting Instructions

1. Use a large ground pad area under device pins 2 and 4 with many plated through-holes as shown.
2. We recommend 1 or 2 ounce copper. Measurements for this data sheet were made on a 31 mil thick FR-4 board with 1 ounce copper on both sides.

Pin #	Function	Description
1	RF IN	RF input pin. This pin requires the use of an external DC blocking capacitor chosen for the frequency of operation.
2, 4	GND	Connection to ground. For optimum RF performance, use via holes as close to ground leads as possible to reduce lead inductance.
3	RF OUT/ BIAS	RF output and bias pin. DC voltage is present on this pin, therefore a DC blocking capacitor is necessary for proper operation.

Part Number Ordering Information

Part Number	Reel Size	Devices/Reel
SNA-286-TR1	7"	1000
SNA-286-TR2	13"	3000
SNA-286-TR3	13"	5000

PCB Pad Layout

Dimensions in inches [millimeters]

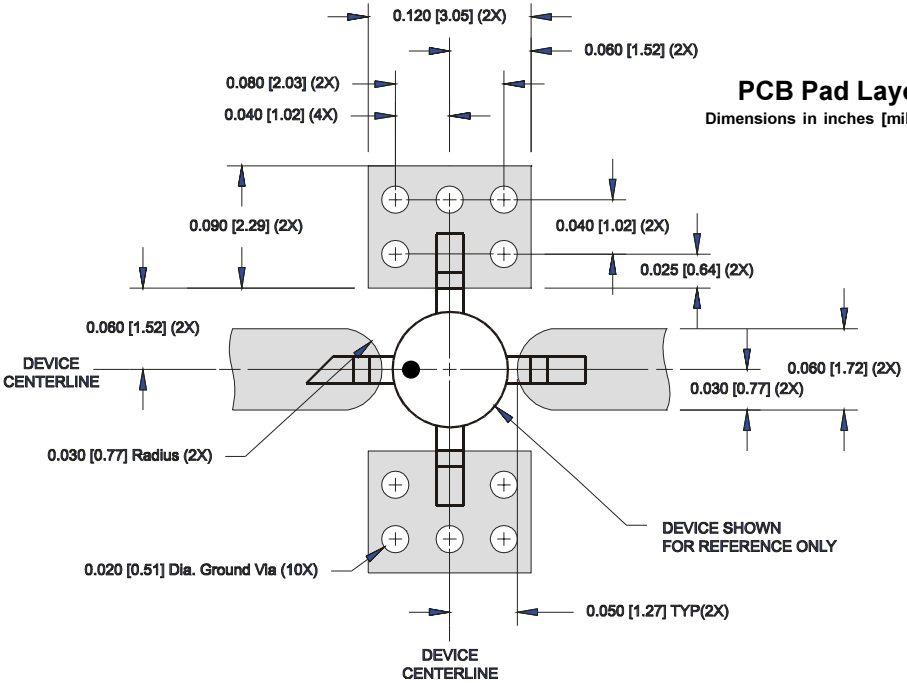

Nominal Package Dimensions

Dimensions in inches [millimeters]

Refer to drawing posted at *www.sirenza.com* for tolerances.

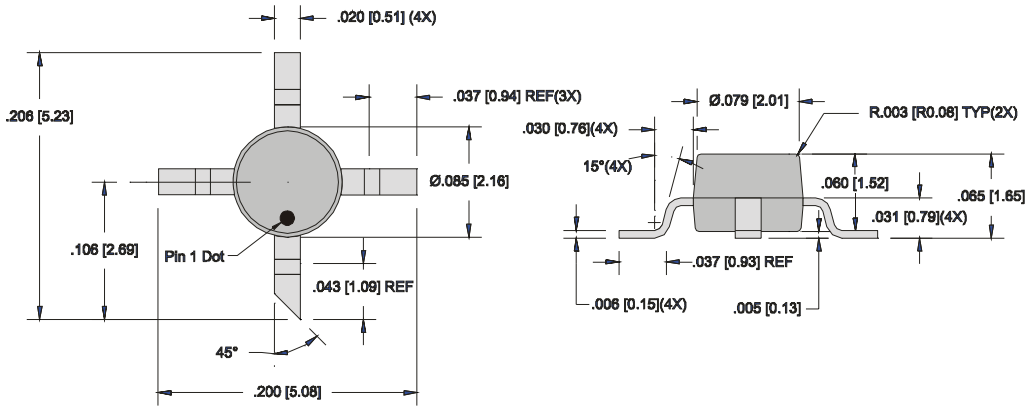

Компания «ЭлектроПласт» предлагает заключение долгосрочных отношений при поставках импортных электронных компонентов на взаимовыгодных условиях!

Наши преимущества:

- Оперативные поставки широкого спектра электронных компонентов отечественного и импортного производства напрямую от производителей и с крупнейших мировых складов;
- Поставка более 17-ти миллионов наименований электронных компонентов;
- Поставка сложных, дефицитных, либо снятых с производства позиций;
- Оперативные сроки поставки под заказ (от 5 рабочих дней);
- Экспресс доставка в любую точку России;
- Техническая поддержка проекта, помощь в подборе аналогов, поставка прототипов;
- Система менеджмента качества сертифицирована по Международному стандарту ISO 9001;
- Лицензия ФСБ на осуществление работ с использованием сведений, составляющих государственную тайну;
- Поставка специализированных компонентов (Xilinx, Altera, Analog Devices, Intersil, Interpoint, Microsemi, Aeroflex, Peregrine, Syfer, Eurofarad, Texas Instrument, Miteq, Cobham, E2V, MA-COM, Hittite, Mini-Circuits,General Dynamics и др.);

Помимо этого, одним из направлений компании «ЭлектроПласт» является направление «Источники питания». Мы предлагаем Вам помощь Конструкторского отдела:

- Подбор оптимального решения, техническое обоснование при выборе компонента;
- Подбор аналогов;
- Консультации по применению компонента;
- Поставка образцов и прототипов;
- Техническая поддержка проекта;
- Защита от снятия компонента с производства.

Как с нами связаться

Телефон: 8 (812) 309 58 32 (многоканальный)
Факс: 8 (812) 320-02-42
Электронная почта: org@eplast1.ru
Адрес: 198099, г. Санкт-Петербург, ул. Калинина, дом 2, корпус 4, литера А.