5.5 V INPUT, 300 mA VOLTAGE REGULATOR WITH SOFT-START FUNCTION

© ABLIC Inc., 2009-2018

Rev.2.2_00

The S-1137 Series, developed using the CMOS technology, is a positive voltage regulator IC which has the low dropout voltage, the high-accuracy output voltage and the soft-start function (300 mA output current).
A 1.0 μF small ceramic capacitor can be used. It operates with low current consumption of 45 μA typ.
The overcurrent protection circuit prevents the load current from exceeding the current capacity of the output transistor. The ON / OFF circuit ensures longer battery life.
Compared to the conventional CMOS technology regulator ICs, various capacitors including small ceramic capacitors can be used for this IC.
Furthermore, small SOT-89-5, SOT-23-5, and SNT-6A(H) packages realize high-density mounting.

■ Features

- Output voltage: 1.2 V to 3.5 V, selectable in 0.05 V step
- Input voltage: 1.7 V to 5.5 V
- Output voltage accuracy: ±1.0% (1.2 V to 1.45 V output product : ±15 mV)
- Dropout voltage: 210 mV typ. (2.8 V output product, I_{OUT} = 300 mA)
- Current consumption: During operation: 45 μA typ., 65 μA max.
  During power-off: 0.1 μA typ., 1.0 μA max.
- Output current: Possible to output 300 mA ($V_{IN} \geq V_{OUT(S)}$ + 1.0 V)*1
- Input and output capacitors: A ceramic capacitor of 1.0 μF or more can be used.
- Ripple rejection: 70 dB typ. (f = 1.0 kHz)
- Built-in soft-start circuit: Soft-start time : 0.7 ms typ. (C_{SS} = 1.0 nF)
- Built-in overcurrent protection circuit: Limits overcurrent of output transistor.
- Built-in ON / OFF circuit: Ensures long battery life.
  Discharge shunt function “available” / “unavailable” is selectable.
  Pull-down function “available” / “unavailable” is selectable.
- Operation temperature range: Ta = −40°C to +85°C
- Lead-free, Sn 100%, halogen-free*2

***1.** Attention should be paid to the power dissipation of the package when the output current is large.
***2.** Refer to “■ **Product Name Structure**” for details.

■ Applications

- Constant-voltage power supply for battery-powered device
- Constant-voltage power supply for cellular phone, portable device
- Constant-voltage power supply for digital still camera, TV, DVD recorder

■ Packages

- SOT-89-5
- SOT-23-5
- SNT-6A(H)

■ Block Diagrams

1. S-1137 Series A type

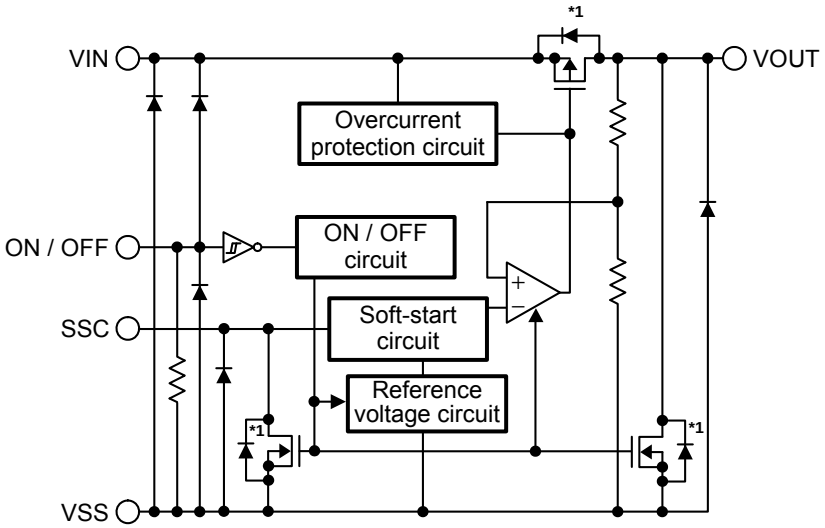

Function	Status
ON / OFF logic	Active "H"
Discharge shunt function	Available
Pull-down resistor	Available

***1.** Parasitic diode

Figure 1

2. S-1137 Series B type

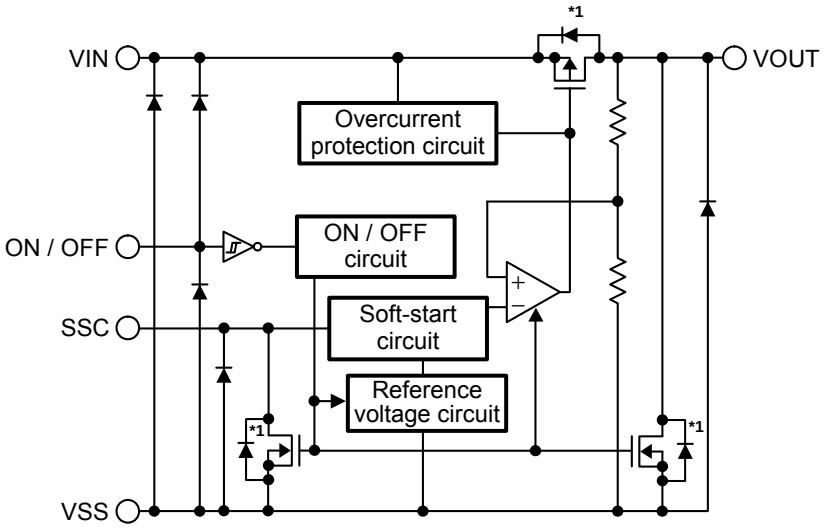

Function	Status
ON / OFF logic	Active "H"
Discharge shunt function	Available
Pull-down resistor	Unavailable

***1.** Parasitic diode

Figure 2

3. S-1137 Series C type

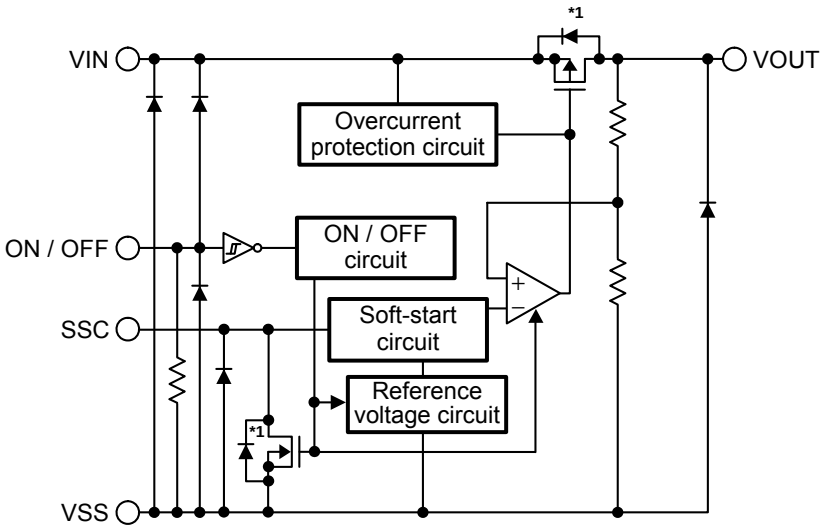

Function	Status
ON / OFF logic	Active “H”
Discharge shunt function	Unavailable
Pull-down resistor	Available

***1.** Parasitic diode

Figure 3

4. S-1137 Series D type

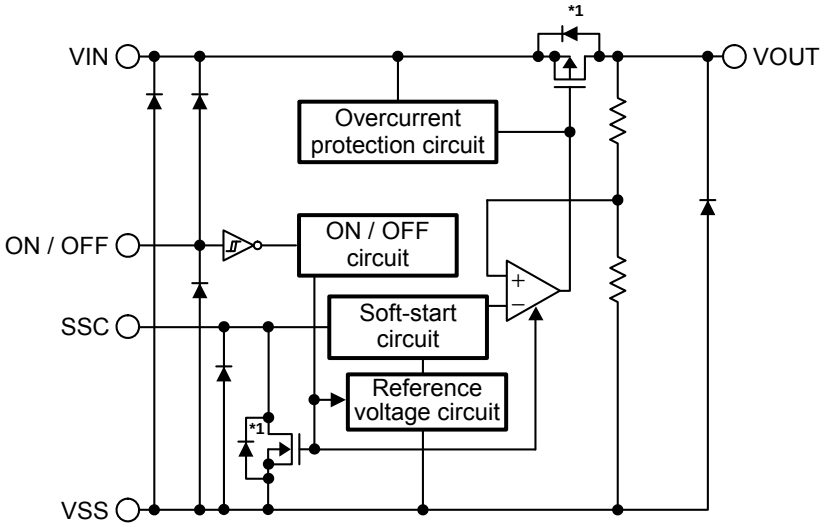

Function	Status
ON / OFF logic	Active “H”
Discharge shunt function	Unavailable
Pull-down resistor	Unavailable

***1.** Parasitic diode

Figure 4

■ Product Name Structure

Users can select the product type, output voltage, and package type for the S-1137 Series. Refer to "**1. Product name**" regarding the contents of product name, "**2. Function list of product type**" regarding the product type, "**3. Packages**" regarding the package drawings.

1. Product name

(1) SOT-89-5

S-1137 x xx - U5T1 x

- Environmental code
  - U: Lead-free (Sn 100%), halogen-free
  - G: Lead-free (for details, please contact our sales office)
- Package abbreviation and IC packing specifications*1
  - U5T1: SOT-89-5, Tape
- Output voltage*2
  - 12 to 35
  - (e.g., when the output voltage is 1.2 V, it is expressed as 12.)
- Product type*3
  - A to D

***1.** Refer to the tape drawing.
***2.** If you request the product which has 0.05 V step, contact our sales office.
***3.** Refer to "**2. Function list of product type**".

(2) SOT-23-5

S-1137 x xx - M5T1 x

- Environmental code
  - U: Lead-free (Sn 100%), halogen-free
  - S: Lead-free, halogen-free
- Package abbreviation and IC packing specifications*1
  - M5T1: SOT-23-5, Tape
- Output voltage*2
  - 12 to 35
  - (e.g., when the output voltage is 1.2 V, it is expressed as 12.)
- Product type*3
  - A to D

***1.** Refer to the tape drawing.
***2.** If you request the product which has 0.05 V step, contact our sales office.
***3.** Refer to "**2. Function list of product type**".

(3) SNT-6A(H)

S-1137 x xx - I6T2 U

Environmental code
U: Lead-free (Sn 100%), halogen-free

Package abbreviation and IC packing specifications*1
I6T2: SNT-6A(H), Tape

Output voltage*2
12 to 35
(e.g., when the output voltage is 1.2 V, it is expressed as 12.)

Product type*3
A to D

***1.** Refer to the tape drawing.
***2.** If you request the product which has 0.05 V step, contact our sales office.
***3.** Refer to "**2. Function list of product type**".

2. Function list of product type

Table 1

Product Type	ON / OFF Logic	Discharge Shunt Function	Pull-down Resistor
A	Active "H"	Available	Available
B	Active "H"	Available	Unavailable
C	Active "H"	Unavailable	Available
D	Active "H"	Unavailable	Unavailable

3. Packages

Package Name	Drawing Code			
	Package	Tape	Reel	Land
SOT-89-5	UP005-A-P-SD	UP005-A-C-SD	UP005-A-R-SD	—
SOT-23-5	MP005-A-P-SD	MP005-A-C-SD	MP005-A-R-SD	—
SNT-6A(H)	PI006-A-P-SD	PI006-A-C-SD	PI006-A-R-SD	PI006-A-L-SD

4. Product name list

4. 1 S-1137 Series A type

ON / OFF logic: Active “H”
Discharge shunt function: Available Pull-down resistor: Available

Table 2

Output Voltage	SOT-89-5	SOT-23-5	SNT-6A(H)
1.2 V ±15 mV	S-1137A12-U5T1x	S-1137A12-M5T1y	S-1137A12-I6T2U
1.3 V ±15 mV	S-1137A13-U5T1x	S-1137A13-M5T1y	S-1137A13-I6T2U
1.4 V ±15 mV	S-1137A14-U5T1x	S-1137A14-M5T1y	S-1137A14-I6T2U
1.5 V ±1.0%	S-1137A15-U5T1x	S-1137A15-M5T1y	S-1137A15-I6T2U
1.6 V ±1.0%	S-1137A16-U5T1x	S-1137A16-M5T1y	S-1137A16-I6T2U
1.7 V ±1.0%	S-1137A17-U5T1x	S-1137A17-M5T1y	S-1137A17-I6T2U
1.8 V ±1.0%	S-1137A18-U5T1x	S-1137A18-M5T1y	S-1137A18-I6T2U
1.85 V ±1.0%	S-1137A1J-U5T1x	S-1137A1J-M5T1y	S-1137A1J-I6T2U
1.9 V ±1.0%	S-1137A19-U5T1x	S-1137A19-M5T1y	S-1137A19-I6T2U
2.0 V ±1.0%	S-1137A20-U5T1x	S-1137A20-M5T1y	S-1137A20-I6T2U
2.1 V ±1.0%	S-1137A21-U5T1x	S-1137A21-M5T1y	S-1137A21-I6T2U
2.2 V ±1.0%	S-1137A22-U5T1x	S-1137A22-M5T1y	S-1137A22-I6T2U
2.3 V ±1.0%	S-1137A23-U5T1x	S-1137A23-M5T1y	S-1137A23-I6T2U
2.4 V ±1.0%	S-1137A24-U5T1x	S-1137A24-M5T1y	S-1137A24-I6T2U
2.5 V ±1.0%	S-1137A25-U5T1x	S-1137A25-M5T1y	S-1137A25-I6T2U
2.6 V ±1.0%	S-1137A26-U5T1x	S-1137A26-M5T1y	S-1137A26-I6T2U
2.7 V ±1.0%	S-1137A27-U5T1x	S-1137A27-M5T1y	S-1137A27-I6T2U
2.8 V ±1.0%	S-1137A28-U5T1x	S-1137A28-M5T1y	S-1137A28-I6T2U
2.85 V ±1.0%	S-1137A2J-U5T1x	S-1137A2J-M5T1y	S-1137A2J-I6T2U
2.9 V ±1.0%	S-1137A29-U5T1x	S-1137A29-M5T1y	S-1137A29-I6T2U
3.0 V ±1.0%	S-1137A30-U5T1x	S-1137A30-M5T1y	S-1137A30-I6T2U
3.1 V ±1.0%	S-1137A31-U5T1x	S-1137A31-M5T1y	S-1137A31-I6T2U
3.2 V ±1.0%	S-1137A32-U5T1x	S-1137A32-M5T1y	S-1137A32-I6T2U
3.3 V ±1.0%	S-1137A33-U5T1x	S-1137A33-M5T1y	S-1137A33-I6T2U
3.4 V ±1.0%	S-1137A34-U5T1x	S-1137A34-M5T1y	S-1137A34-I6T2U
3.5 V ±1.0%	S-1137A35-U5T1x	S-1137A35-M5T1y	S-1137A35-I6T2U

Remark 1. Please contact our sales office for products with specifications other than the above.
2. x: G or U
y: S or U
3. Please select products of environmental code = U for Sn 100%, halogen-free products.

4. 2 S-1137 Series B type

ON / OFF logic: Active "H"
Discharge shunt function: Available Pull-down resistor: Unavailable

Table 3

Output Voltage	SOT-89-5	SOT-23-5	SNT-6A(H)
1.2 V ±15 mV	S-1137B12-U5T1x	S-1137B12-M5T1y	S-1137B12-I6T2U
1.3 V ±15 mV	S-1137B13-U5T1x	S-1137B13-M5T1y	S-1137B13-I6T2U
1.4 V ±15 mV	S-1137B14-U5T1x	S-1137B14-M5T1y	S-1137B14-I6T2U
1.5 V ±1.0%	S-1137B15-U5T1x	S-1137B15-M5T1y	S-1137B15-I6T2U
1.6 V ±1.0%	S-1137B16-U5T1x	S-1137B16-M5T1y	S-1137B16-I6T2U
1.7 V ±1.0%	S-1137B17-U5T1x	S-1137B17-M5T1y	S-1137B17-I6T2U
1.8 V ±1.0%	S-1137B18-U5T1x	S-1137B18-M5T1y	S-1137B18-I6T2U
1.85 V ±1.0%	S-1137B1J-U5T1x	S-1137B1J-M5T1y	S-1137B1J-I6T2U
1.9 V ±1.0%	S-1137B19-U5T1x	S-1137B19-M5T1y	S-1137B19-I6T2U
2.0 V ±1.0%	S-1137B20-U5T1x	S-1137B20-M5T1y	S-1137B20-I6T2U
2.1 V ±1.0%	S-1137B21-U5T1x	S-1137B21-M5T1y	S-1137B21-I6T2U
2.2 V ±1.0%	S-1137B22-U5T1x	S-1137B22-M5T1y	S-1137B22-I6T2U
2.3 V ±1.0%	S-1137B23-U5T1x	S-1137B23-M5T1y	S-1137B23-I6T2U
2.4 V ±1.0%	S-1137B24-U5T1x	S-1137B24-M5T1y	S-1137B24-I6T2U
2.5 V ±1.0%	S-1137B25-U5T1x	S-1137B25-M5T1y	S-1137B25-I6T2U
2.6 V ±1.0%	S-1137B26-U5T1x	S-1137B26-M5T1y	S-1137B26-I6T2U
2.7 V ±1.0%	S-1137B27-U5T1x	S-1137B27-M5T1y	S-1137B27-I6T2U
2.8 V ±1.0%	S-1137B28-U5T1x	S-1137B28-M5T1y	S-1137B28-I6T2U
2.85 V ±1.0%	S-1137B2J-U5T1x	S-1137B2J-M5T1y	S-1137B2J-I6T2U
2.9 V ±1.0%	S-1137B29-U5T1x	S-1137B29-M5T1y	S-1137B29-I6T2U
3.0 V ±1.0%	S-1137B30-U5T1x	S-1137B30-M5T1y	S-1137B30-I6T2U
3.1 V ±1.0%	S-1137B31-U5T1x	S-1137B31-M5T1y	S-1137B31-I6T2U
3.2 V ±1.0%	S-1137B32-U5T1x	S-1137B32-M5T1y	S-1137B32-I6T2U
3.3 V ±1.0%	S-1137B33-U5T1x	S-1137B33-M5T1y	S-1137B33-I6T2U
3.4 V ±1.0%	S-1137B34-U5T1x	S-1137B34-M5T1y	S-1137B34-I6T2U
3.5 V ±1.0%	S-1137B35-U5T1x	S-1137B35-M5T1y	S-1137B35-I6T2U

Remark 1. Please contact our sales office for products with specifications other than the above.
2. x: G or U
y: S or U
3. Please select products of environmental code = U for Sn 100%, halogen-free products.

4. 3 S-1137 Series C type

ON / OFF logic: Active "H"
Discharge shunt function: Unavailable Pull-down resistor: Available

Table 4

Output Voltage	SOT-89-5	SOT-23-5	SNT-6A(H)
1.2 V ±15 mV	S-1137C12-U5T1x	S-1137C12-M5T1y	S-1137C12-I6T2U
1.3 V ±15 mV	S-1137C13-U5T1x	S-1137C13-M5T1y	S-1137C13-I6T2U
1.4 V ±15 mV	S-1137C14-U5T1x	S-1137C14-M5T1y	S-1137C14-I6T2U
1.5 V ±1.0%	S-1137C15-U5T1x	S-1137C15-M5T1y	S-1137C15-I6T2U
1.6 V ±1.0%	S-1137C16-U5T1x	S-1137C16-M5T1y	S-1137C16-I6T2U
1.7 V ±1.0%	S-1137C17-U5T1x	S-1137C17-M5T1y	S-1137C17-I6T2U
1.8 V ±1.0%	S-1137C18-U5T1x	S-1137C18-M5T1y	S-1137C18-I6T2U
1.85 V ±1.0%	S-1137C1J-U5T1x	S-1137C1J-M5T1y	S-1137C1J-I6T2U
1.9 V ±1.0%	S-1137C19-U5T1x	S-1137C19-M5T1y	S-1137C19-I6T2U
2.0 V ±1.0%	S-1137C20-U5T1x	S-1137C20-M5T1y	S-1137C20-I6T2U
2.1 V ±1.0%	S-1137C21-U5T1x	S-1137C21-M5T1y	S-1137C21-I6T2U
2.2 V ±1.0%	S-1137C22-U5T1x	S-1137C22-M5T1y	S-1137C22-I6T2U
2.3 V ±1.0%	S-1137C23-U5T1x	S-1137C23-M5T1y	S-1137C23-I6T2U
2.4 V ±1.0%	S-1137C24-U5T1x	S-1137C24-M5T1y	S-1137C24-I6T2U
2.5 V ±1.0%	S-1137C25-U5T1x	S-1137C25-M5T1y	S-1137C25-I6T2U
2.6 V ±1.0%	S-1137C26-U5T1x	S-1137C26-M5T1y	S-1137C26-I6T2U
2.7 V ±1.0%	S-1137C27-U5T1x	S-1137C27-M5T1y	S-1137C27-I6T2U
2.8 V ±1.0%	S-1137C28-U5T1x	S-1137C28-M5T1y	S-1137C28-I6T2U
2.85 V ±1.0%	S-1137C2J-U5T1x	S-1137C2J-M5T1y	S-1137C2J-I6T2U
2.9 V ±1.0%	S-1137C29-U5T1x	S-1137C29-M5T1y	S-1137C29-I6T2U
3.0 V ±1.0%	S-1137C30-U5T1x	S-1137C30-M5T1y	S-1137C30-I6T2U
3.1 V ±1.0%	S-1137C31-U5T1x	S-1137C31-M5T1y	S-1137C31-I6T2U
3.2 V ±1.0%	S-1137C32-U5T1x	S-1137C32-M5T1y	S-1137C32-I6T2U
3.3 V ±1.0%	S-1137C33-U5T1x	S-1137C33-M5T1y	S-1137C33-I6T2U
3.4 V ±1.0%	S-1137C34-U5T1x	S-1137C34-M5T1y	S-1137C34-I6T2U
3.5 V ±1.0%	S-1137C35-U5T1x	S-1137C35-M5T1y	S-1137C35-I6T2U

Remark 1. Please contact our sales office for products with specifications other than the above.
2. x: G or U
y: S or U
3. Please select products of environmental code = U for Sn 100%, halogen-free products.

4. 4 S-1137 Series D type

ON / OFF logic: Active “H”
Discharge shunt function: Unavailable Pull-down resistor: Unavailable

Table 5

Output Voltage	SOT-89-5	SOT-23-5	SNT-6A(H)
1.2 V ±15 mV	S-1137D12-U5T1x	S-1137D12-M5T1y	S-1137D12-I6T2U
1.3 V ±15 mV	S-1137D13-U5T1x	S-1137D13-M5T1y	S-1137D13-I6T2U
1.4 V ±15 mV	S-1137D14-U5T1x	S-1137D14-M5T1y	S-1137D14-I6T2U
1.5 V ±1.0%	S-1137D15-U5T1x	S-1137D15-M5T1y	S-1137D15-I6T2U
1.6 V ±1.0%	S-1137D16-U5T1x	S-1137D16-M5T1y	S-1137D16-I6T2U
1.7 V ±1.0%	S-1137D17-U5T1x	S-1137D17-M5T1y	S-1137D17-I6T2U
1.8 V ±1.0%	S-1137D18-U5T1x	S-1137D18-M5T1y	S-1137D18-I6T2U
1.85 V ±1.0%	S-1137D1J-U5T1x	S-1137D1J-M5T1y	S-1137D1J-I6T2U
1.9 V ±1.0%	S-1137D19-U5T1x	S-1137D19-M5T1y	S-1137D19-I6T2U
2.0 V ±1.0%	S-1137D20-U5T1x	S-1137D20-M5T1y	S-1137D20-I6T2U
2.1 V ±1.0%	S-1137D21-U5T1x	S-1137D21-M5T1y	S-1137D21-I6T2U
2.2 V ±1.0%	S-1137D22-U5T1x	S-1137D22-M5T1y	S-1137D22-I6T2U
2.3 V ±1.0%	S-1137D23-U5T1x	S-1137D23-M5T1y	S-1137D23-I6T2U
2.4 V ±1.0%	S-1137D24-U5T1x	S-1137D24-M5T1y	S-1137D24-I6T2U
2.5 V ±1.0%	S-1137D25-U5T1x	S-1137D25-M5T1y	S-1137D25-I6T2U
2.6 V ±1.0%	S-1137D26-U5T1x	S-1137D26-M5T1y	S-1137D26-I6T2U
2.7 V ±1.0%	S-1137D27-U5T1x	S-1137D27-M5T1y	S-1137D27-I6T2U
2.8 V ±1.0%	S-1137D28-U5T1x	S-1137D28-M5T1y	S-1137D28-I6T2U
2.85 V ±1.0%	S-1137D2J-U5T1x	S-1137D2J-M5T1y	S-1137D2J-I6T2U
2.9 V ±1.0%	S-1137D29-U5T1x	S-1137D29-M5T1y	S-1137D29-I6T2U
3.0 V ±1.0%	S-1137D30-U5T1x	S-1137D30-M5T1y	S-1137D30-I6T2U
3.1 V ±1.0%	S-1137D31-U5T1x	S-1137D31-M5T1y	S-1137D31-I6T2U
3.2 V ±1.0%	S-1137D32-U5T1x	S-1137D32-M5T1y	S-1137D32-I6T2U
3.3 V ±1.0%	S-1137D33-U5T1x	S-1137D33-M5T1y	S-1137D33-I6T2U
3.4 V ±1.0%	S-1137D34-U5T1x	S-1137D34-M5T1y	S-1137D34-I6T2U
3.5 V ±1.0%	S-1137D35-U5T1x	S-1137D35-M5T1y	S-1137D35-I6T2U

Remark 1. Please contact our sales office for products with specifications other than the above.
2. x: G or U
y: S or U
3. Please select products of environmental code = U for Sn 100%, halogen-free products.

■ Pin Configurations

1. SOT-89-5

Top view

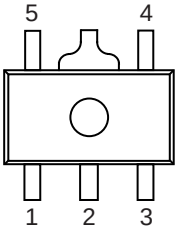

Figure 5

Table 6

Pin No.	Symbol	Description
1	VOUT	Output voltage pin
2	VSS	GND pin
3	SSC	Pin for soft-start control*1
4	ON / OFF	ON / OFF pin
5	VIN	Input voltage pin

***1.** Connect a capacitor between the SSC pin and VSS pin. The VOUT rising speeds at power-on and at the time when the ON / OFF pin is set to ON can be adjusted according to the capacitance.
For details, refer to **"■ Selection of Capacitor for Soft-start (C_{SS})"**.

2. SOT-23-5

Top view

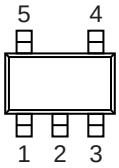

Figure 6

Table 7

Pin No.	Symbol	Description
1	VIN	Input voltage pin
2	VSS	GND pin
3	ON / OFF	ON / OFF pin
4	SSC	Pin for soft-start control*1
5	VOUT	Output voltage pin

***1.** Connect a capacitor between the SSC pin and VSS pin. The VOUT rising speeds at power-on and at the time when the ON / OFF pin is set to ON can be adjusted according to the capacitance.
For details, refer to **"■ Selection of Capacitor for Soft-start (C_{SS})"**.

3. SNT-6A(H)

Top view

Figure 7

Table 8

Pin No.	Symbol	Description
1	VOUT	Output voltage pin
2	VSS	GND pin
3	SSC	Pin for soft-start control*1
4	ON / OFF	ON / OFF pin
5	VSS	GND pin
6	VIN	Input voltage pin

***1.** Connect a capacitor between the SSC pin and VSS pin. The VOUT rising speeds at power-on and at the time when the ON / OFF pin is set to ON can be adjusted according to the capacitance.
For details, refer to **"■ Selection of Capacitor for Soft-start (C_{SS})"**.

■ Absolute Maximum Ratings

Table 9

(Ta = 25°C unless otherwise specified)

Item		Symbol	Absolute Maximum Rating	Unit
Input voltage		V_{IN}	V_{SS} − 0.3 to V_{SS} + 6.0	V
		$V_{ON / OFF}$	V_{SS} − 0.3 to V_{IN} + 0.3	V
		V_{SSC}	V_{SS} − 0.3 to V_{IN} + 0.3	V
Output voltage		V_{OUT}	V_{SS} − 0.3 to V_{IN} + 0.3	V
Power dissipation	SOT-89-5	P_D	1000*1	mW
	SOT-23-5		600*1	mW
	SNT-6A(H)		500*1	mW
Operation ambient temperature		T_{opr}	−40 to +85	°C
Storage temperature		T_{stg}	−40 to +125	°C

***1.** When mounted on board
[Mounted board]
(1) Board size : 114.3 mm × 76.2 mm × t1.6 mm
(2) Name : JEDEC STANDARD51-7

Caution The absolute maximum ratings are rated values exceeding which the product could suffer physical damage. These values must therefore not be exceeded under any conditions.

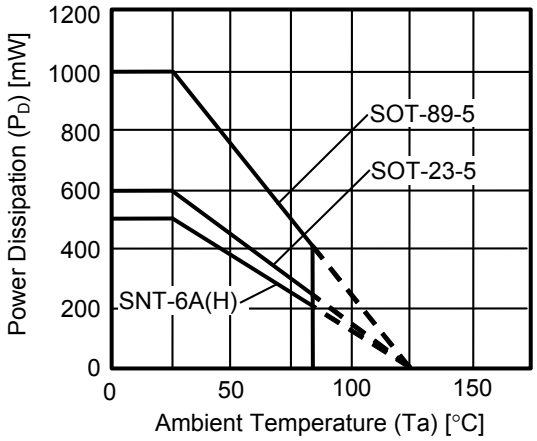

Figure 8 Power Dissipation of Package

■ Electrical Characteristics

Table 10 (1 / 2)

(Ta = 25°C unless otherwise specified)

Item	Symbol	Condition		Min.	Typ.	Max.	Unit	Test Circuit
Output voltage*1	$V_{OUT(E)}$	$V_{IN} = V_{OUT(S)} + 1.0$ V, $I_{OUT} = 100$ mA	1.2 V ≤ $V_{OUT(S)}$ < 1.5 V	$V_{OUT(S)} - 0.015$	$V_{OUT(S)}$	$V_{OUT(S)} + 0.015$	V	1
			1.5 V ≤ $V_{OUT(S)}$ ≤ 3.5 V	$V_{OUT(S)} \times 0.99$	$V_{OUT(S)}$	$V_{OUT(S)} \times 1.01$	V	1
Output current*2	I_{OUT}	$V_{IN} \geq V_{OUT(S)} + 1.0$ V		300*5	—	—	mA	3
Dropout voltage*3	V_{drop}	$I_{OUT} = 300$ mA	1.2 V ≤ $V_{OUT(S)}$ < 1.3 V	0.50	0.58	0.67	V	1
			1.3 V ≤ $V_{OUT(S)}$ < 1.4 V	—	0.48	0.56	V	1
			1.4 V ≤ $V_{OUT(S)}$ < 1.5 V	—	0.37	0.50	V	1
			1.5 V ≤ $V_{OUT(S)}$ < 1.7 V	—	0.31	0.47	V	1
			1.7 V ≤ $V_{OUT(S)}$ < 2.0 V	—	0.28	0.42	V	1
			2.0 V ≤ $V_{OUT(S)}$ < 2.4 V	—	0.25	0.38	V	1
			2.4 V ≤ $V_{OUT(S)}$ < 2.8 V	—	0.23	0.35	V	1
			2.8 V ≤ $V_{OUT(S)}$ ≤ 3.5 V	—	0.21	0.31	V	1
Line regulation	$\frac{\Delta V_{OUT1}}{\Delta V_{IN} \bullet V_{OUT}}$	$V_{OUT(S)} + 0.5$ V ≤ V_{IN} ≤ 5.5 V, $I_{OUT} = 100$ mA		—	0.05	0.2	%/V	1
Load regulation	ΔV_{OUT2}	$V_{IN} = V_{OUT(S)} + 1.0$ V, 1.0 mA ≤ I_{OUT} ≤ 100 mA		—	15	40	mV	1
		$V_{IN} = V_{OUT(S)} + 1.0$ V, 1.0 mA ≤ I_{OUT} ≤ 300 mA		—	45	120	mV	1
Output voltage temperature coefficient*4	$\frac{\Delta V_{OUT}}{\Delta Ta \bullet V_{OUT}}$	$V_{IN} = V_{OUT(S)} + 1.0$ V, $I_{OUT} = 30$ mA, −40°C ≤ Ta ≤ +85°C		—	±130	—	ppm/°C	1
Current consumption during operation	I_{SS1}	$V_{IN} = V_{OUT(S)} + 1.0$ V, ON / OFF pin = ON, no load		—	45	65	μA	2
Current consumption during power-off	I_{SS2}	$V_{IN} = V_{OUT(S)} + 1.0$ V, ON / OFF pin = OFF, no load		—	0.1	1.0	μA	2
Input voltage	V_{IN}	—		1.7	—	5.5	V	—
ON / OFF pin input voltage "H"	V_{SH}	$V_{IN} = V_{OUT(S)} + 1.0$ V, $R_L = 1.0$ kΩ determined by V_{OUT} output level		1.0	—	—	V	4
ON / OFF pin input voltage "L"	V_{SL}	$V_{IN} = V_{OUT(S)} + 1.0$ V, $R_L = 1.0$ kΩ determined by V_{OUT} output level		—	—	0.3	V	4
ON / OFF pin input current "H"	I_{SH}	$V_{IN} = 5.5$ V, $V_{ON / OFF} = 5.5$ V	B / D type	−0.1	—	0.1	μA	4
			A / C type	1.0	2.5	5.0	μA	4
ON / OFF pin input current "L"	I_{SL}	$V_{IN} = 5.5$ V, $V_{ON / OFF} = 0$ V		−0.1	—	0.1	μA	4
Ripple rejection	$\lvert RR \rvert$	$V_{IN} = V_{OUT(S)} + 1.0$ V, f = 1.0 kHz, $\Delta V_{rip} = 0.5$ Vrms, $I_{OUT} = 50$ mA		—	70	—	dB	5
Short-circuit current	I_{short}	$V_{IN} = V_{OUT(S)} + 1.0$ V, ON / OFF pin = ON, $V_{OUT} = 0$ V		—	150	—	mA	3
Soft-start time	t_{SS}	$V_{IN} = V_{OUT(S)} + 1.0$ V, $I_{OUT} = 100$ mA, $C_L = 1.0$ μF, $C_{SS} = 1.0$ nF		—	0.7	—	ms	1

Table 10 (2 / 2)

S-1137 Series A / B type (With discharge shunt function)

Item	Symbol	Condition	Min.	Typ.	Max.	Unit	Test Circuit
Discharge shunt resistance during power-off	R_{LOW}	V_{OUT} = 0.1 V, V_{IN} = 5.5 V	—	35	—	Ω	3

S-1137 Series A / C type (With pull-down resistor)

Item	Symbol	Condition	Min.	Typ.	Max.	Unit	Test Circuit
Power-off pull-down resistor	R_{PD}	—	1.0	2.2	5.0	MΩ	4

***1.** $V_{OUT(S)}$: Set output voltage
$V_{OUT(E)}$: Actual output voltage
Output voltage when fixing I_{OUT} (= 100 mA) and inputting $V_{OUT(S)}$ +1.0 V

***2.** The output current at which the output voltage becomes 95% of $V_{OUT(E)}$ after gradually increasing the output current.

***3.** $V_{drop} = V_{IN1} - (V_{OUT3} \times 0.98)$
V_{OUT3} is the output voltage when $V_{IN} = V_{OUT(S)} + 1.0$ V and I_{OUT} = 300 mA.
V_{IN1} is the input voltage at which the output voltage becomes 98% of V_{OUT3} after gradually decreasing the input voltage.

***4.** A change in temperature of the output voltage [mV/°C] is calculated using the following equation.

$$\frac{\Delta V_{OUT}}{\Delta Ta}\ [\mathrm{mV/°C}]^{*1} = V_{OUT(S)}\ [\mathrm{V}]^{*2} \times \frac{\Delta V_{OUT}}{\Delta Ta \bullet V_{OUT}}\ [\mathrm{ppm/°C}]^{*3} \div 1000$$

***1.** Change in temperature of output voltage
***2.** Set output voltage
***3.** Output voltage temperature coefficient

***5.** The output current can be at least this value.
Due to restrictions on the package power dissipation, this value may not be satisfied. Attention should be paid to the power dissipation of the package when the output current is large.
This specification is guaranteed by design.

■ Test Circuits

1.

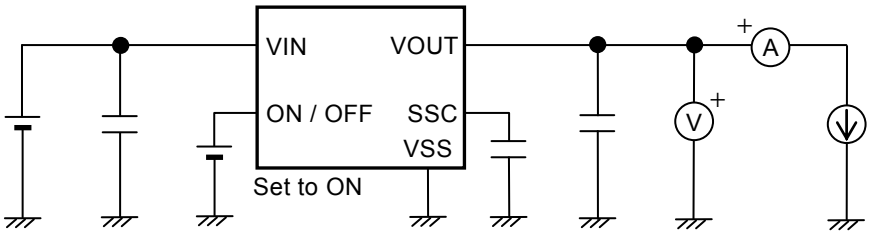

Figure 9

2.

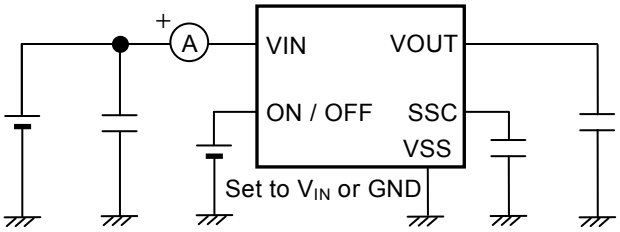

Figure 10

3.

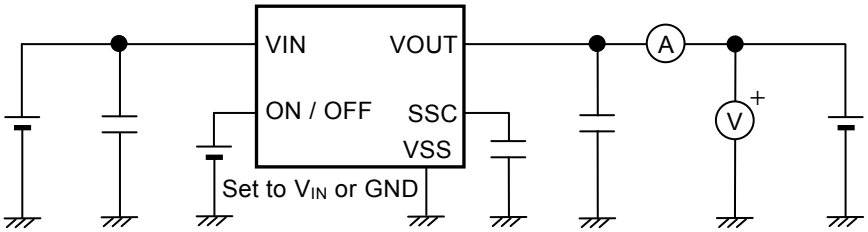

Figure 11

4.

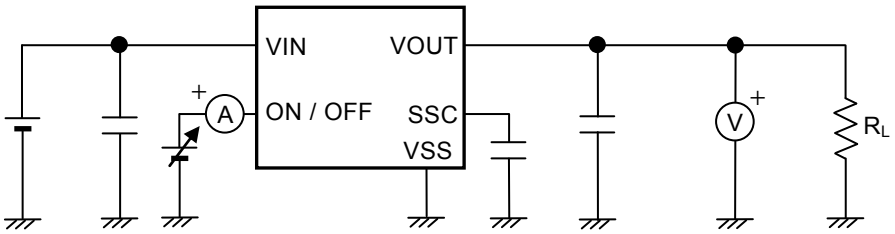

Figure 12

5.

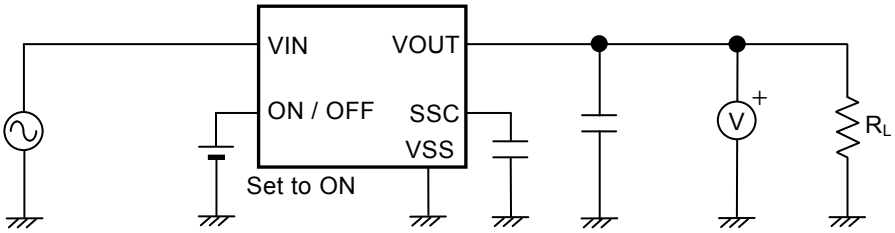

Figure 13

■ Standard Circuit

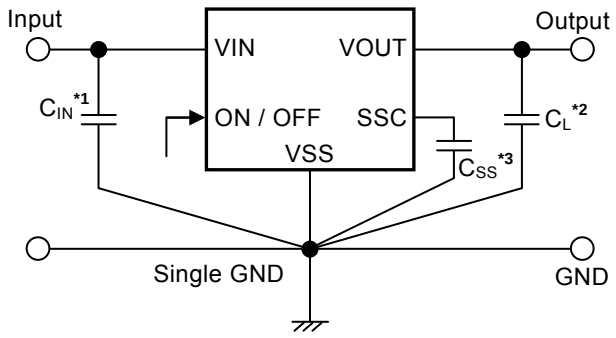

***1.** C_{IN} is a capacitor for stabilizing the input.
***2.** A ceramic capacitor of 1.0 μF or more can be used as C_L.
***3.** A ceramic capacitor of 0.22 nF to 22 nF can be used for C_{SS}.

Figure 14

Caution The above connection diagram and constants will not guarantee successful operation. Perform thorough evaluation using the actual application to set the constants.

■ Condition of Application

Input capacitor (C_{IN}) : 1.0 μF or more
Output capacitor (C_L) : 1.0 μF or more
Capacitor for soft-start (C_{SS}) : 0.22 nF to 22 nF

Caution Generally a series regulator may cause oscillation, depending on the selection of external parts. Confirm that no oscillation occurs in the application for which the above capacitors are used.

■ Selection of Input and Output Capacitors (C_{IN}, C_L)

The S-1137 Series requires an output capacitor between the VOUT pin and VSS pin for phase compensation. Operation is stabilized by a ceramic capacitor with an output capacitance of 1.0 μF or more over the entire temperature range. When using an OS capacitor, a tantalum capacitor, or an aluminum electrolytic capacitor, the capacitance must be 1.0 μF or more.
The value of the output overshoot or undershoot transient response varies depending on the value of the output capacitor. The required capacitance of the input capacitor differs depending on the application.
The recommended capacitance for an application is $C_{IN} \geq 1.0$ μF, $C_L \geq 1.0$ μF; however, when selecting the output capacitor, perform sufficient evaluation including evaluation of temperature characteristics with the actual device.

■ Selection of Capacitor for Soft-start (C_{SS})

The S-1137 Series requires a capacitor for soft-start (C_{SS}) between the SSC pin and VSS pin. Over the entire temperature range, the S-1137 Series operates stably with a ceramic capacitor of 0.22 nF or more. According to C_{SS} capacitance, the rising speed of the output voltage is adjustable. The time that the output voltage rises to 99% is 0.7 ms typ. at C_{SS} = 1.0 nF. The recommended value for applications is 0.22 nF $\leq C_{SS} \leq$ 22 nF, however, define the values by sufficient evaluation including the temperature characteristics under the usage condition.

■ Explanation of Terms

1. Low dropout voltage regulator

This voltage regulator has the low dropout voltage due to its built-in low on-resistance transistor.

2. Output voltage (V_{OUT})

The accuracy of the output voltage is ensured at ±1.0% or ±15 mV[*1] under the specified conditions of fixed input voltage[*2], fixed output current, and fixed temperature.

***1.** When V_{OUT} < 1.5 V : ±15 mV, When 1.5 V ≤ V_{OUT} : ±1.0%
***2.** Differs depending on the product.

Caution **If the above conditions change, the output voltage value may vary and exceed the accuracy range of the output voltage. Refer to "■ Electrical Characteristics" and "■ Characteristics (Typical Data)" for details.**

3. Line regulation $\left(\frac{\Delta V_{OUT1}}{\Delta V_{IN} \bullet V_{OUT}}\right)$

Indicates the dependency of the output voltage on the input voltage. That is, the values show how much the output voltage changes due to a change in the input voltage with the output current remaining unchanged.

4. Load regulation (ΔV_{OUT2})

Indicates the dependency of the output voltage on the output current. That is, the values show how much the output voltage changes due to a change in the output current with the input voltage remaining unchanged.

5. Dropout voltage (V_{drop})

Indicates the difference between input voltage (V_{IN1}) and the output voltage when; decreasing input voltage (V_{IN}) gradually until the output voltage has dropped out to the value of 98% of output voltage (V_{OUT3}), which is at $V_{IN} = V_{OUT(S)} + 1.0$ V.

$V_{drop} = V_{IN1} - (V_{OUT3} \times 0.98)$

6. Output voltage temperature coefficient $\left(\frac{\Delta V_{OUT}}{\Delta Ta \bullet V_{OUT}}\right)$

The shaded area in **Figure 15** is the range where V_{OUT} varies in the operation temperature range when the output voltage temperature coefficient is ±130 ppm/°C.

Example of S-1137B30 typ. product

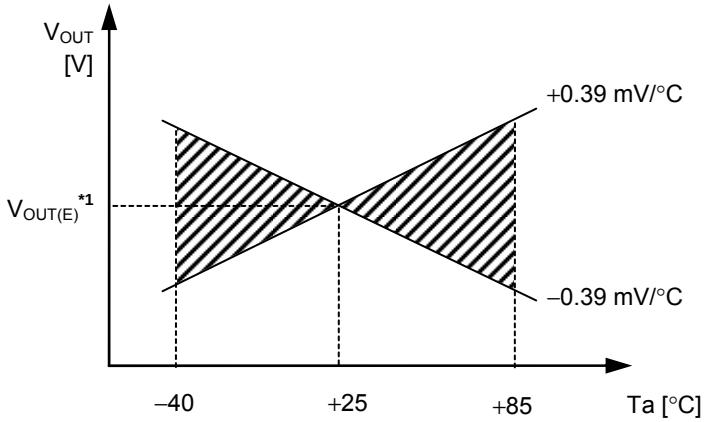

***1.** $V_{OUT(E)}$ is the value of the output voltage measured at Ta = +25°C.

Figure 15

A change in the temperature of the output voltage [mV/°C] is calculated using the following equation.

$$\frac{\Delta V_{OUT}}{\Delta Ta}\ [\text{mV/°C}]^{*1} = V_{OUT(S)}\ [\text{V}]^{*2} \times \frac{\Delta V_{OUT}}{\Delta Ta \bullet V_{OUT}}\ [\text{ppm/°C}]^{*3} \div 1000$$

***1.** Change in temperature of output voltage
***2.** Set output voltage
***3.** Output voltage temperature coefficient

■ Operation

1. Basic operation

Figure 16 shows the block diagram of the S-1137 Series.
The error amplifier compares the reference voltage (V_{ref}) with feedback voltage (V_{fb}), which is the output voltage resistance-divided by feedback resistors (R_s and R_f). It supplies the gate voltage necessary to maintain the constant output voltage which is not influenced by the input voltage and temperature change, to the output transistor.

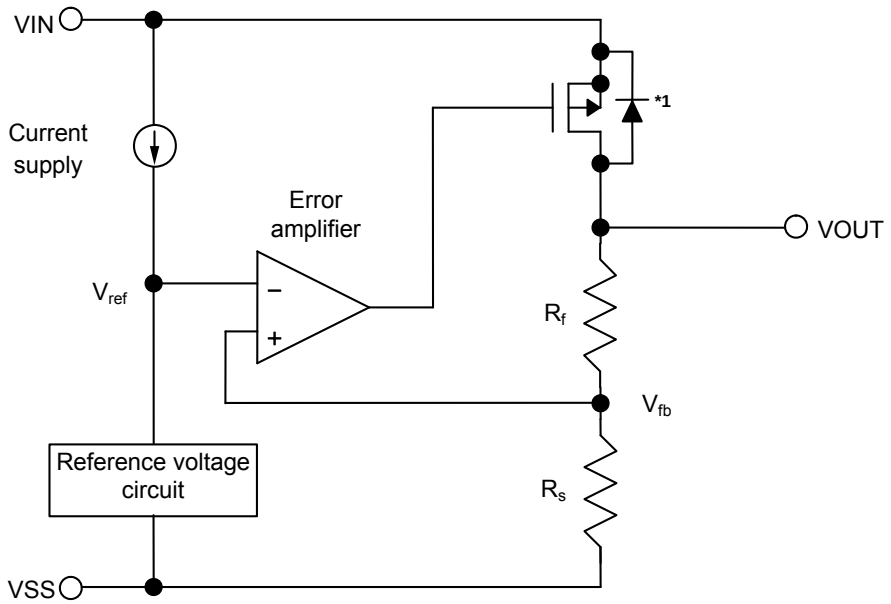

***1.** Parasitic diode

Figure 16

2. Output transistor

In the S-1137 Series, a low on-resistance P-channel MOS FET is used as the output transistor.
Be sure that V_{OUT} does not exceed V_{IN} + 0.3 V to prevent the voltage regulator from being damaged due to reverse current flowing from the VOUT pin through a parasitic diode to the VIN pin, when the potential of V_{OUT} became higher than V_{IN}.

3. ON / OFF pin

This pin starts and stops the regulator.

When the ON / OFF pin is set to OFF level, the entire internal circuit stops operating, and the built-in P-channel MOS FET output transistor between the VIN pin and VOUT pin is turned off, reducing current consumption significantly. The S-1137 Series has a discharge shunt circuit which discharges the capacitor for soft-start (C_{SS}) so that the SSC pin is forcibly set to the V_{SS} level.
Since the S-1137 Series A / B types have a built-in discharge shunt circuit to discharge the output capacitance, the VOUT pin is forcibly set to V_{SS} level. In the S-1137 Series C / D types, the VOUT pin is set to V_{SS} level through several hundred kΩ internal divided resistors between the VOUT pin and VSS pin.

Note that the current consumption increases when a voltage of 0.3 V to 1.0 V (Ta = 25°C) is applied to the ON / OFF pin. The ON / OFF pin is configured as shown in **Figures 17** and **18**. In the S-1137 Series A / C types, the ON / OFF pin is internally pulled down to the VSS pin in the floating status, so the VOUT pin is set to the V_{SS} level. In the S-1137 Series B / D types, the ON / OFF pin is not internally pulled down, so do not use the pin in the floating status. When not using the ON / OFF pin in the S-1137 Series B / D types, connect the pin to the VIN pin.

Table 11

Product Type	ON / OFF Pin	Internal Circuit	VOUT Pin Voltage	Current Consumption
A / B / C / D	"H" : ON	Operate	Set value	I_{SS1} *1
A / B / C / D	"L" : OFF	Stop	V_{SS} level	I_{SS2}

***1**. IC's current consumption increases as much as current flows into the pull-down resistor when the ON / OFF pin is connected to the VIN pin and the S-1137 Series A / C types is operating (**Figure 17**).

(1) S-1137 Series A / C Type

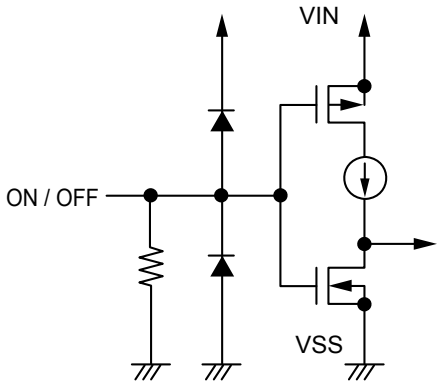

Figure 17

(2) S-1137 Series B / D Type

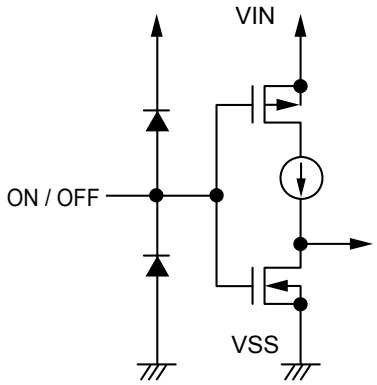

Figure 18

4. Discharge shunt function (S-1137 Series A / B types)

The S-1137 Series A / B types have a built-in discharge shunt circuit to discharge the output capacitance. When the ON / OFF pin is set to OFF level, turns the output transistor off, and turns the discharge shunt circuit on so that the output capacitor discharges. These types allow for the VOUT pin reach the V_{SS} level faster than the S-1137 Series C / D types that does not have a discharge shunt circuit.

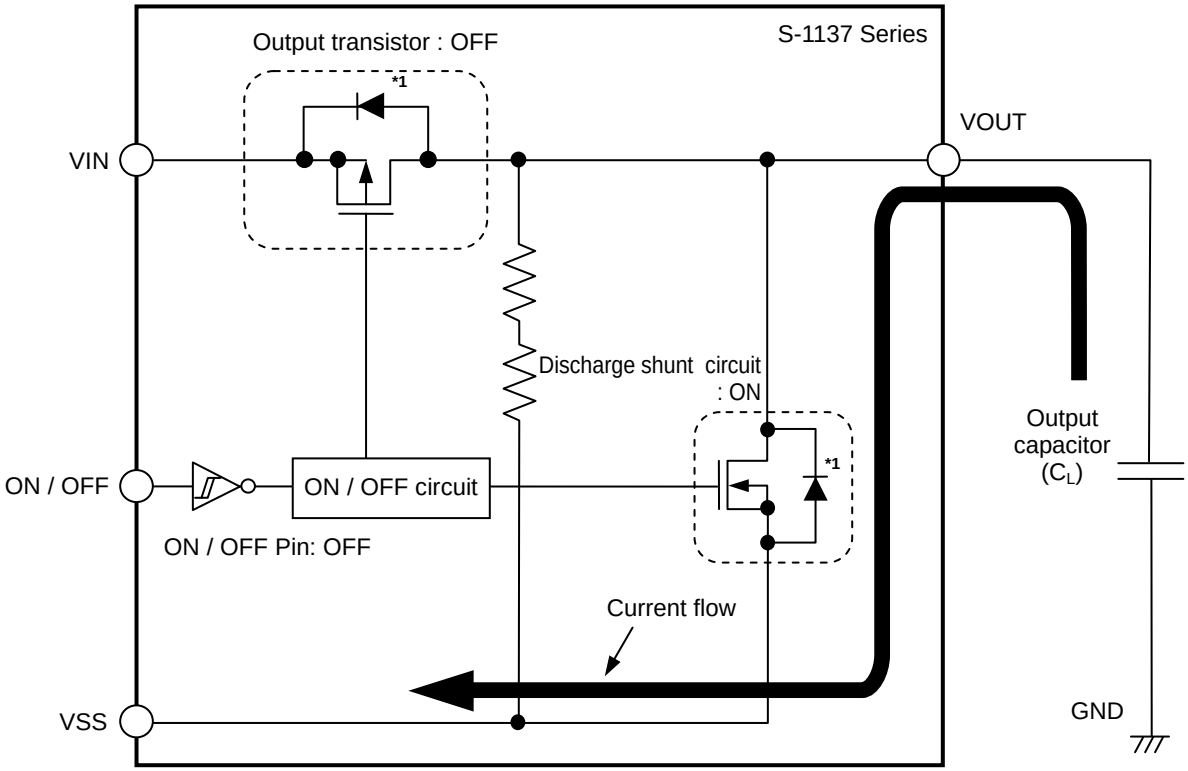

***1**. Parasitic diode

Figure 19

5. Overcurrent protection circuit

The S-1137 Series has an overcurrent protection circuit having the characteristics shown in "**(1) Output Voltage vs. Output Current (When Load Current Increases) (Ta = 25°C)**" in "**■ Characteristics (Typical Data)**", in order to protect the output transistor against an excessive output current and short circuiting between the VOUT pin and VSS pin. The current when the output pin is short-circuited (I_{short}) is internally set at approx. 150 mA typ., and the normal value is restored for the output voltage, if releasing a short circuit once.

Caution This overcurrent protection circuit does not work as for thermal protection. If this IC long keeps short circuiting inside, pay attention to the conditions of input voltage and load current so that, under the usage conditions including short circuit, the loss of the IC will not exceed power dissipation of the package.

6. Pull-down resistor (S-1137 Series A / C types)

In the S-1137 Series A / C types, the ON / OFF pin is internally pulled down to the VSS pin in the floating status, so the VOUT pin is set to the V_{SS} level.

IC's current consumption increases as much as current flows into the pull-down resistor of 2.2 MΩ typ. when the ON / OFF pin is connected to the VIN pin and the S-1137 Series A / C types is operating.

7. Soft-start function

The S-1137 Series has a soft-start circuit to suppress the rush current (I_{RUSH}) and overshoot of the output voltage generated at power-on or at the time when the ON / OFF pin is set to ON.
Immediately after power-on or after the ON / OFF pin is set to ON, the output voltage slowly rises. The time that the output voltage rises to 99% (t_{SS}) is adjustable by a capacitor (C_{SS}) externally connected between the SSC pin and VSS pin. When C_{SS} = 1.0 nF, the time is 0.7 ms typ. At the time when the ON / OFF pin is set to OFF, the electric charge charged in the external capacitor (C_{SS}) will be discharged by the discharge shunt transistor.

The soft-start time (t_{SS}) is defined by time consonants of the built-in constant current (approx. 1 μA) and the external capacitor (C_{SS}):

t_{SS} (ms) = soft-start coefficient × C_{SS} (nF)

The soft-start coefficient (25°C) is as follows.

Min. : 0.4, Typ. : 0.7, Max. : 1.2

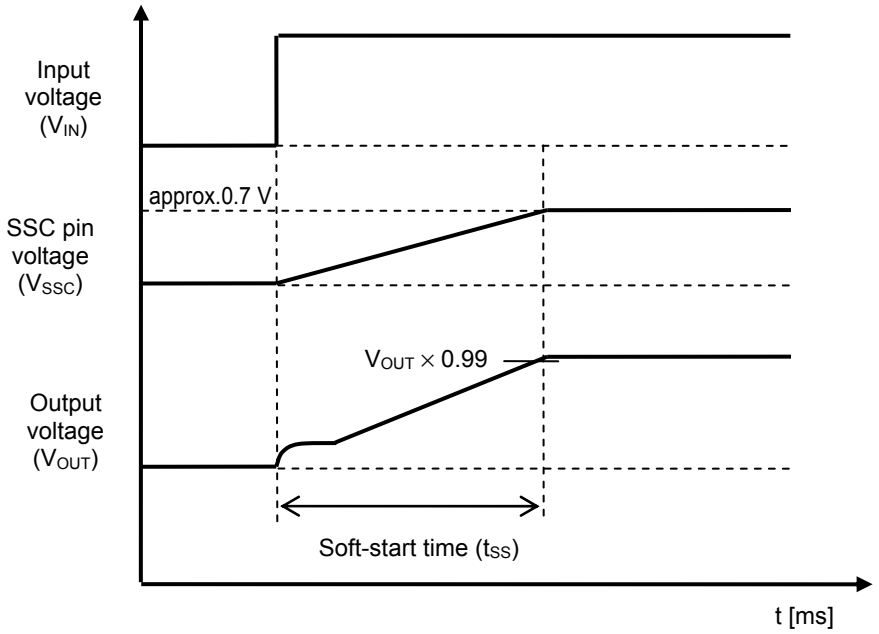

Figure 20

The rush current can be suppressed greatly by the soft-start function.
As the value of the external capacitor is larger, the rush current decreases more.
Figure 21 shows the waveform example of the rush current.

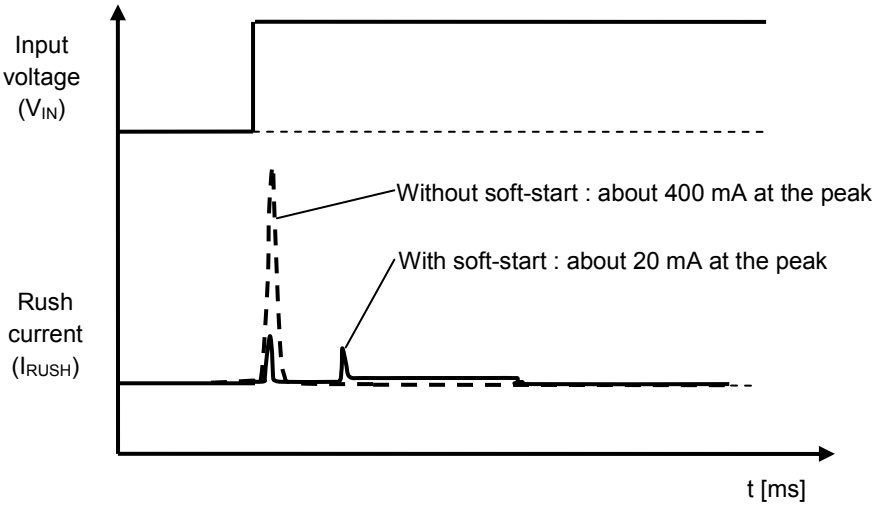

Figure 21 Waveform Example of Rush Current

■ Precautions

- Wiring patterns for the VIN pin, the VOUT pin and GND should be designed so that the impedance is low. When mounting an output capacitor between the VOUT pin and VSS pin (C_L), the capacitor for stabilizing the input between the VIN pin and VSS pin (C_{IN}), and the capacitor for soft-start between the SSC pin and VSS pin, the distance from the capacitors to these pins should be as short as possible.
- Note that generally the output voltage may increase when a series regulator is used at low load current (1.0 mA or less).
- Note that generally the output voltage may increase due to the leakage current from an output driver when a series regulator is used at high temperature.
- Generally a series regulator may cause oscillation, depending on the selection of external parts. The following conditions are recommended for the S-1137 Series. However, be sure to perform sufficient evaluation under the actual usage conditions for selection, including evaluation of temperature characteristics. Refer to "**(8) Example of Equivalent Series Resistance vs. Output Current Characteristics (Ta = 25°C)**" in "**■ Reference Data**" for the equivalent series resistance (R_{ESR}) of the output capacitor.

  Input capacitor (C_{IN}) : 1.0 μF or more
  Output capacitor (C_L) : 1.0 μF or more
  Capacitor for soft-start (C_{SS}) : 0.22 nF to 22 nF

- The voltage regulator may oscillate when the impedance of the power supply is high and the input capacitance is small or an input capacitor is not connected.
- If the output capacitance is small, power supply's fluctuation and the characteristics of load fluctuation become worse. Sufficiently evaluate the output voltage's fluctuation with the actual device.
- Although the S-1137 Series has a soft-start circuit, overshoot may occur in the output voltage momentarily when the capacitance of the capacitor for soft-start (C_{SS}) is small. Perform sufficient evaluation with actual devices.
- The application conditions for the input voltage, output voltage, and load current should not exceed the package power dissipation.
- Do not apply an electrostatic discharge to this IC that exceeds the performance ratings of the built-in electrostatic protection circuit.
- In determining the output current, attention should be paid to the output current value specified in **Table 10** in "**■ Electrical Characteristics**" and footnote ***5** of the table.
- ABLIC Inc. claims no responsibility for any disputes arising out of or in connection with any infringement by products including this IC of patents owned by a third party.

■ Characteristics (Typical Data)

(1) Output Voltage vs. Output Current (When Load Current Increases) (Ta = 25°C)

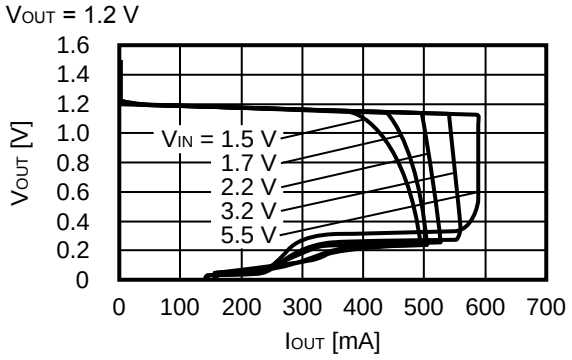

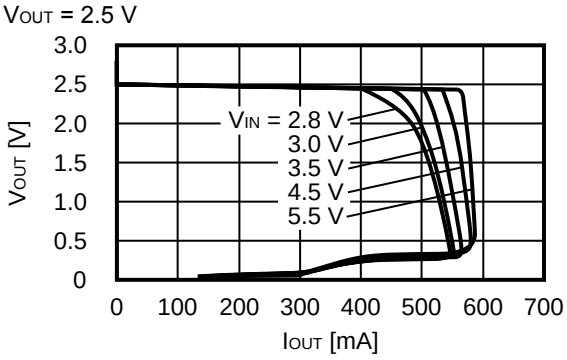

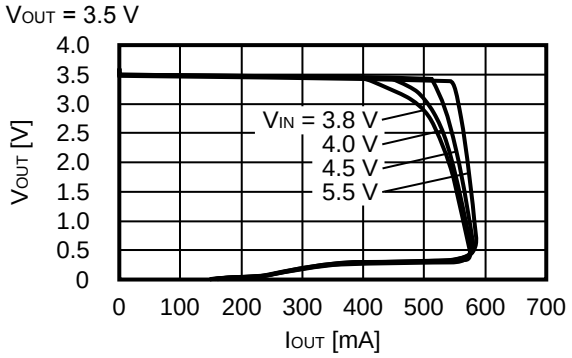

Remark In determining the output current, attention should be paid to the following.

1. The minimum output current value and footnote ***5** in **Table 10** in the "■ **Electrical Characteristics**"
2. The package power dissipation

(2) Output Voltage vs. Input Voltage (Ta = 25°C)

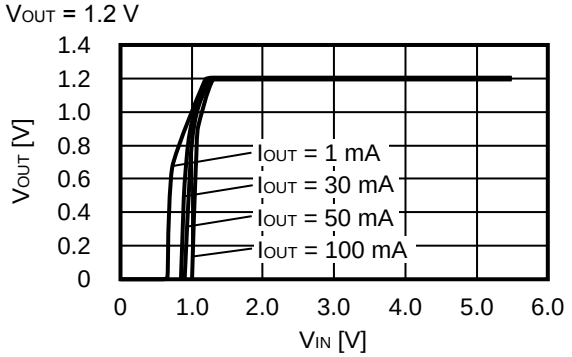

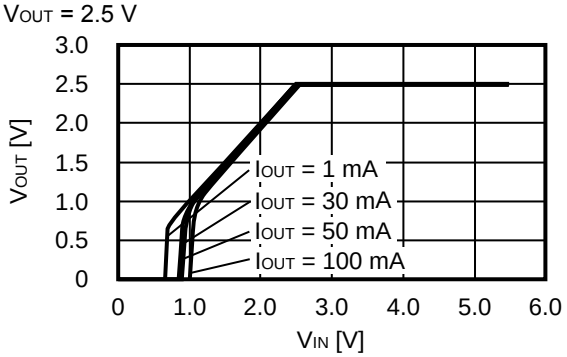

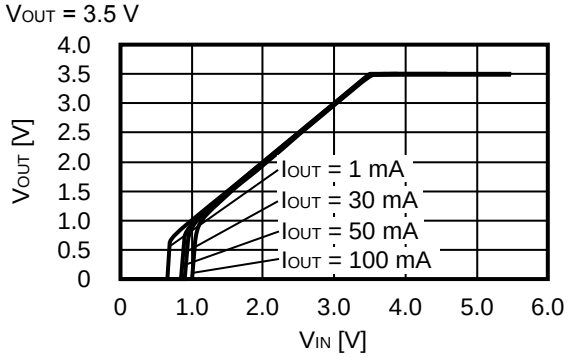

(3) Dropout Voltage vs. Output Current

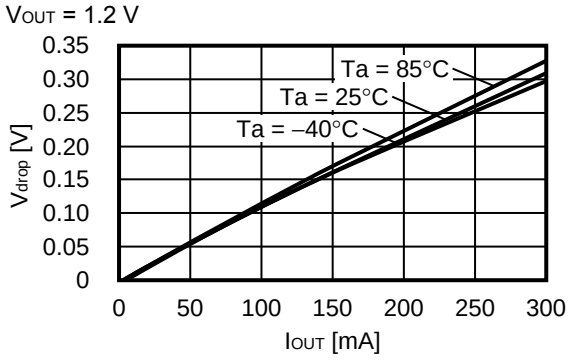

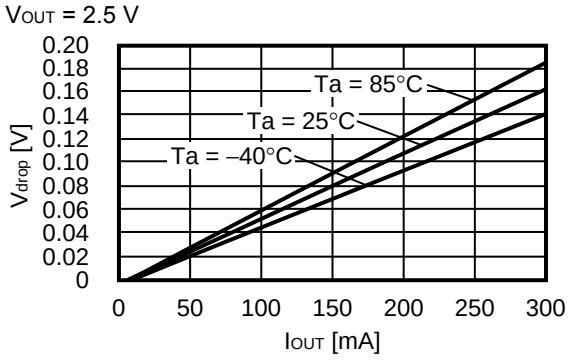

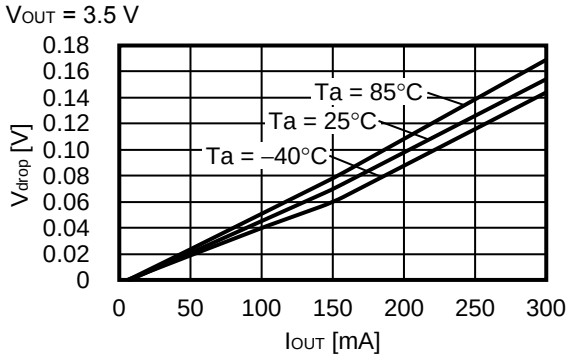

(4) Dropout Voltage vs. Set Output Voltage

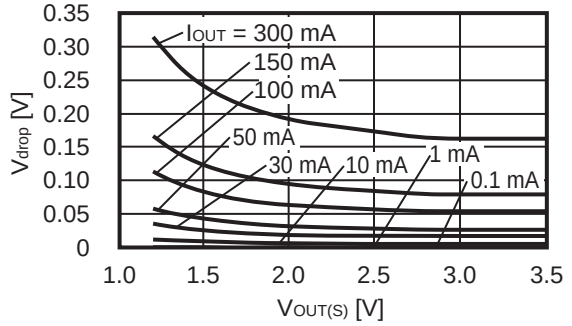

(5) Output Voltage vs. Ambient Temperature

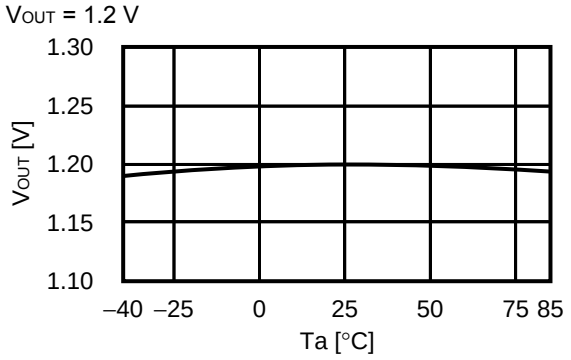

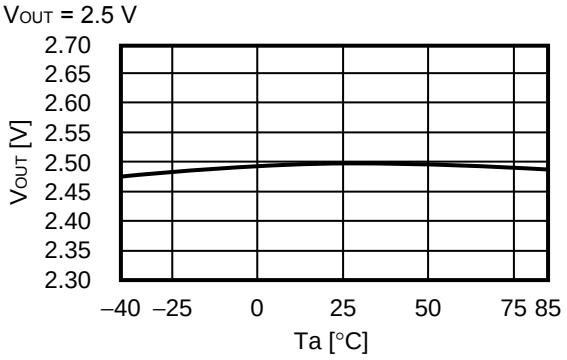

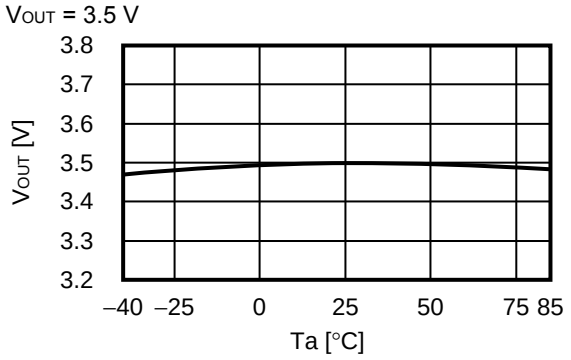

(6) Current Consumption vs. Input Voltage

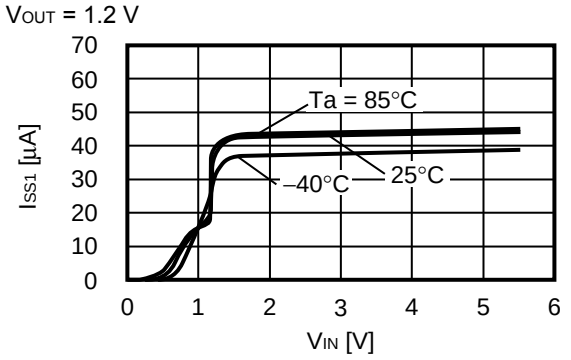

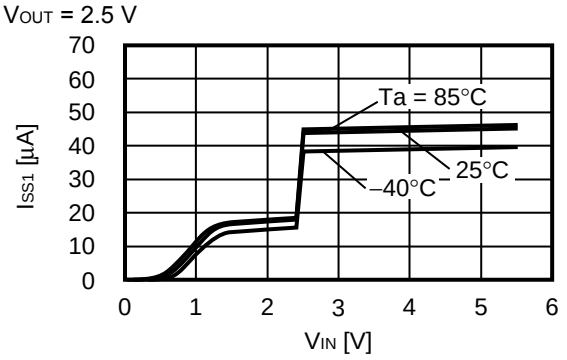

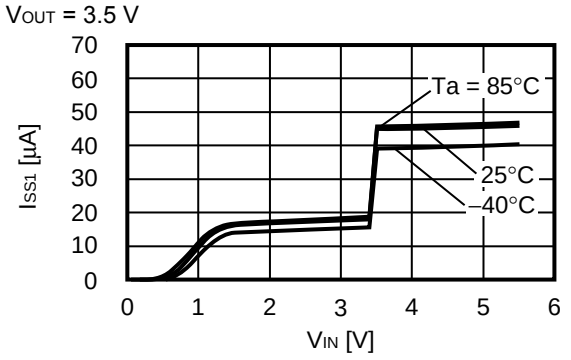

(7) Ripple Rejection (Ta = 25°C)

V_{OUT} = 1.2 V

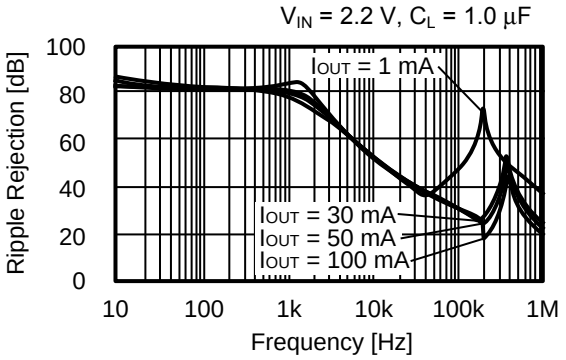

V_{OUT} = 2.5 V

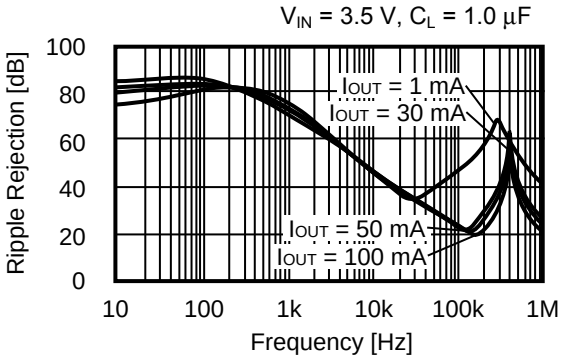

V_{OUT} = 3.5 V

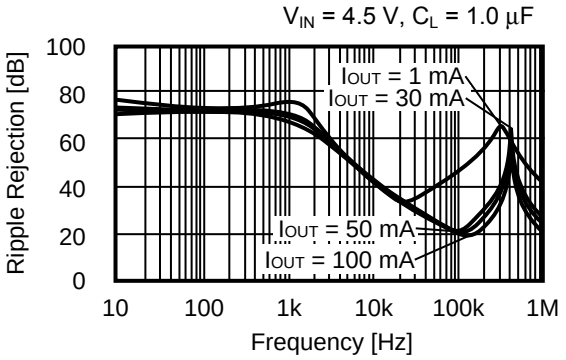

■ Reference Data

(1) Transient Response Characteristics when Input (Ta = 25°C)

V_{OUT} = 1.2 V
I_{OUT} = 100 mA, t_r = t_f = 5.0 μs, C_L = 1.0 μF, C_{SS} = 1.0 nF

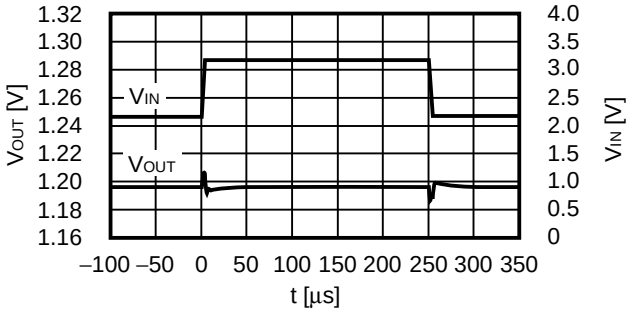

V_{OUT} = 2.5 V
I_{OUT} = 100 mA, t_r = t_f = 5.0 μs, C_L = 1.0 μF, C_{SS} = 1.0 nF

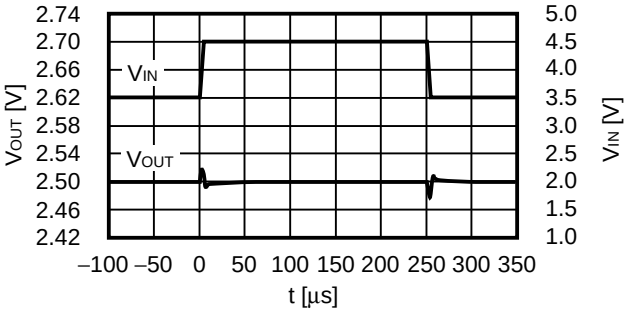

V_{OUT} = 3.5 V
I_{OUT} = 100 mA, t_r = t_f = 5.0 μs, C_L = 1.0 μF, C_{SS} = 1.0 nF

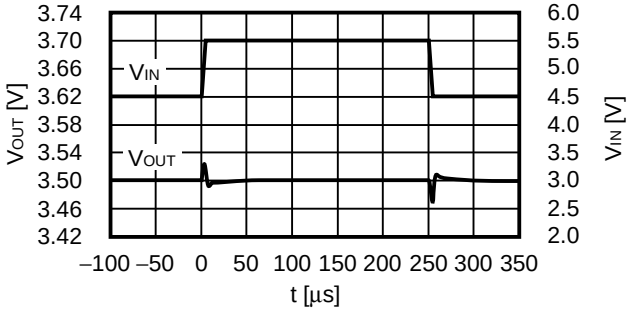

(2) Transient Response Characteristics of Load (Ta = 25°C)

V_{OUT} = 1.2 V
V_{IN} = 2.2 V, C_{IN} = C_L = 1.0 μF, C_{SS} = 1.0 nF, I_{OUT} = 50 mA ↔ 100 mA

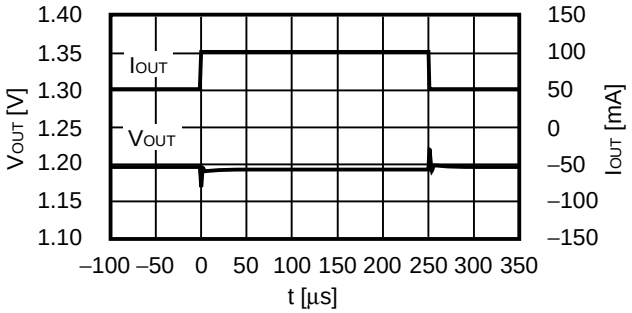

V_{OUT} = 2.5 V
V_{IN} = 3.5 V, C_{IN} = C_L = 1.0 μF, C_{SS} = 1.0 nF, I_{OUT} = 50 mA ↔ 100 mA

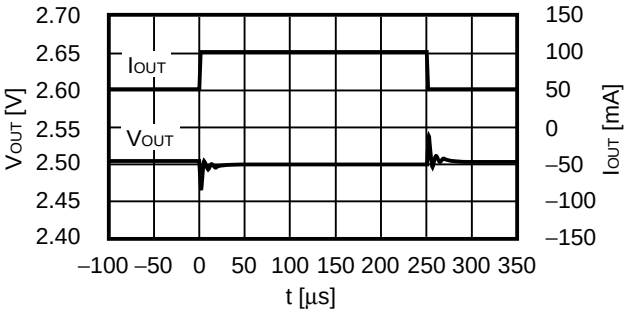

V_{OUT} = 3.5 V
V_{IN} = 4.5 V, C_{IN} = C_L = 1.0 μF, C_{SS} = 1.0 nF, I_{OUT} = 50 mA ↔ 100 mA

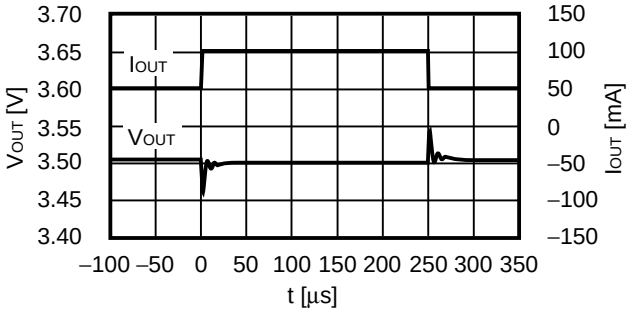

(3) Transient Response Characteristics of ON / OFF Pin (Ta = 25°C)

V_{OUT} = 1.2 V
V_{IN} = 2.2 V, t_r = 1.0 µs, C_{IN} = C_L = 1.0 µF, C_{SS} = 1.0 nF, I_{OUT} = 100 mA

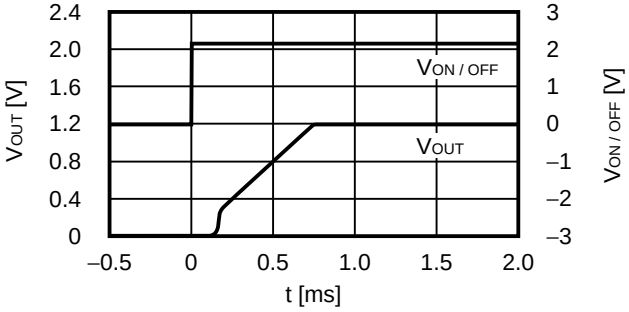

V_{OUT} = 2.5 V
V_{IN} = 3.5 V, t_r = 1.0 µs, C_{IN} = C_L = 1.0 µF, C_{SS} = 1.0 nF, I_{OUT} = 100 mA

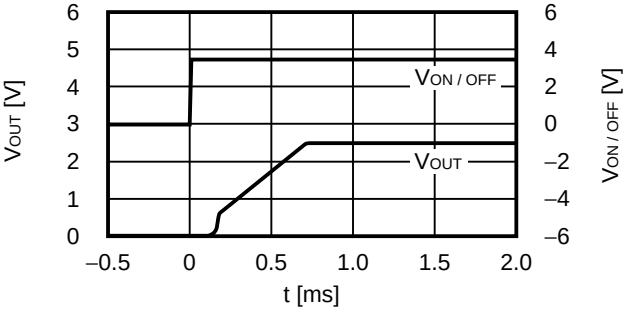

V_{OUT} = 3.5 V
V_{IN} = 4.5 V, t_r = 1.0 µs, C_{IN} = C_L = 1.0 µF, C_{SS} = 1.0 nF, I_{OUT} = 100 mA

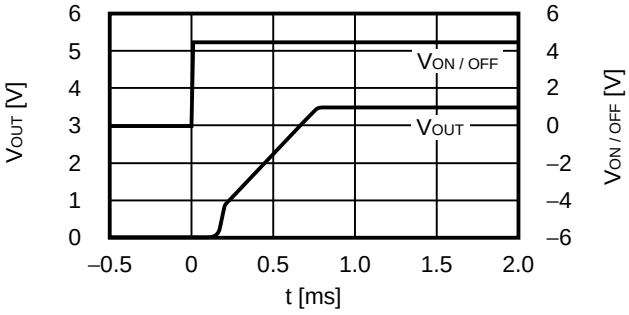

(4) Soft-start Time vs. Ambient Temperature Characteristics

V_{IN} = V_{OUT} + 1.0 V, $V_{ON / OFF}$ = 0 V → V_{OUT} + 1.0 V,
C_{IN} = C_L = 1.0 µF, C_{SS} = 1.0 nF

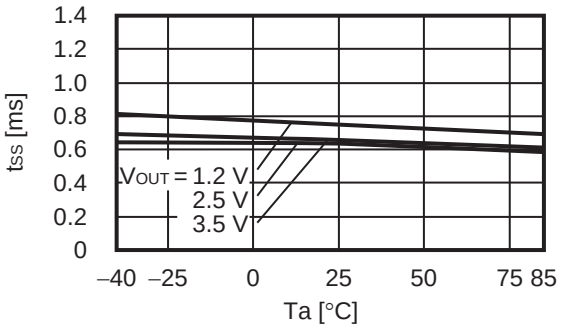

(5) Soft-start time vs. Capacitor for Soft-start Characteristics (Ta = 25°C)

V_{IN} = V_{OUT} + 1.0 V, $V_{ON / OFF}$ = 0 V → V_{OUT} + 1.0 V,
C_{IN} = C_L = 1.0 µF

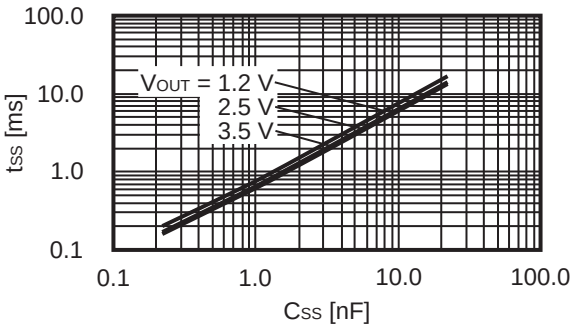

(6) Rush Current Characteristics (Ta = 25°C)

V_{OUT} = 1.2 V, V_{IN} = 2.2 V, I_{OUT} = 0 mA,
C_L = 1.0 μF, C_{SS} = 0.22 nF

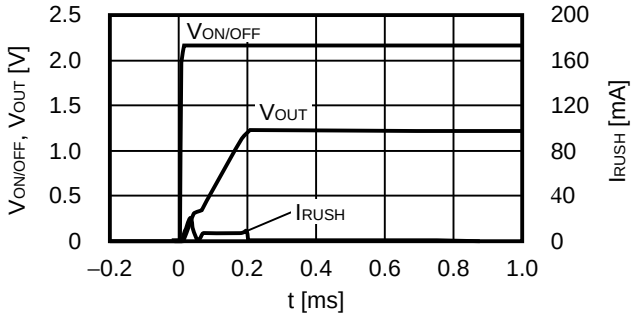

V_{OUT} = 1.2 V, V_{IN} = 2.2 V, I_{OUT} = 0 mA,
C_L = 1.0 μF, C_{SS} = 1.0 nF

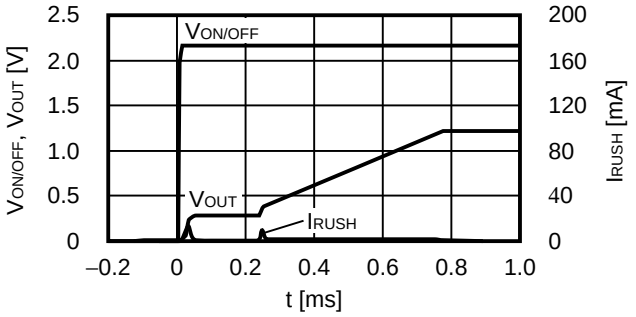

V_{OUT} = 1.2 V, V_{IN} = 2.2 V, I_{OUT} = 0 mA,
C_L = 1.0 μF, C_{SS} = 22.0 nF

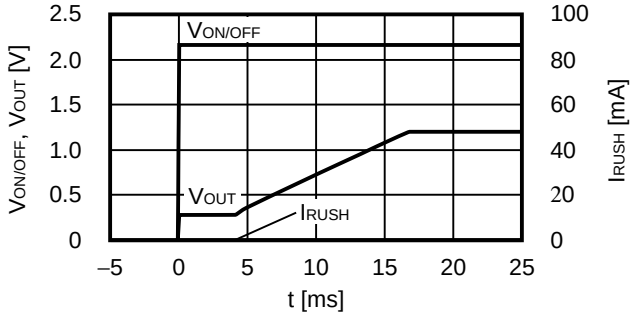

V_{OUT} = 3.5 V, V_{IN} = 4.5 V, I_{OUT} = 0 mA,
C_L = 1.0 μF, C_{SS} = 0.22 nF

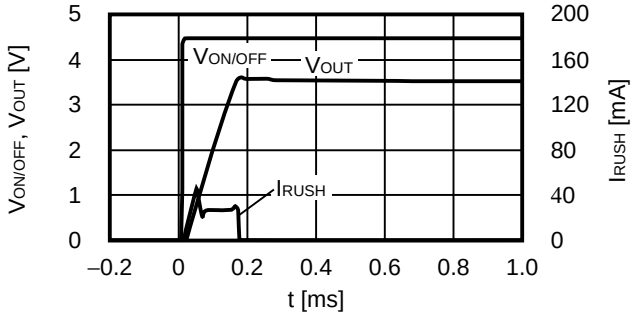

V_{OUT} = 3.5 V, V_{IN} = 4.5 V, I_{OUT} = 0 mA,
C_L = 1.0 μF, C_{SS} = 1.0 nF

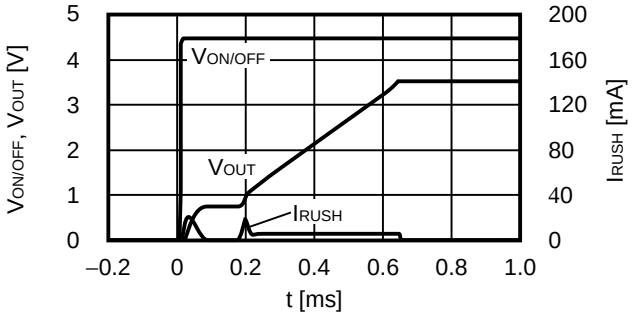

V_{OUT} = 3.5 V, V_{IN} = 4.5 V, I_{OUT} = 0 mA,
C_L = 1.0 μF, C_{SS} = 22.0 nF

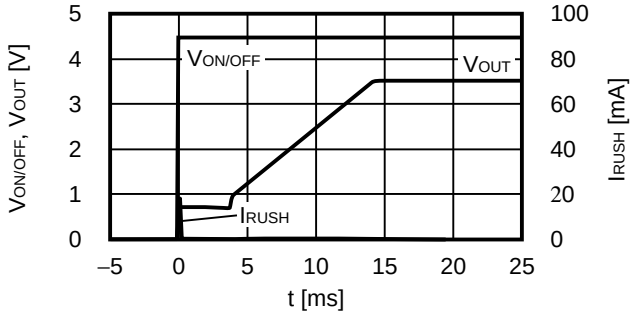

(7) Output Capacitance vs. Characteristics of Discharge Time (Ta = 25°C)
S-1137 Series A / B type (with discharge shunt function)

$V_{IN} = V_{OUT} + 1.0$ V, I_{OUT} = no load
$V_{ON / OFF} = V_{OUT} + 1.0$ V → V_{SS}, t_f = 1 μs

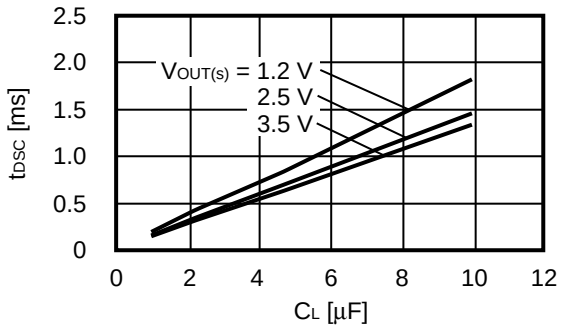

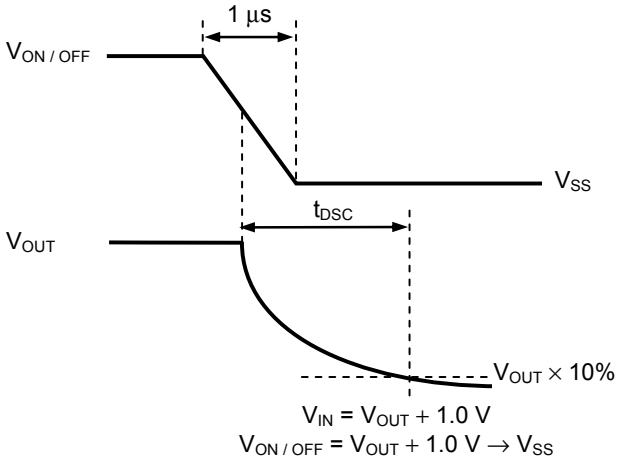

Figure 22 Measurement Condition of Discharge Time

(8) Example of Equivalent Series Resistance vs. Output Current Characteristics (Ta = 25°C)

C_L : Murata Manufacturing Co., Ltd. GRM155B31A105K (1.0 μF)
C_{SS} : Murata Manufacturing Co., Ltd. GRM40B102K (1.0 nF)

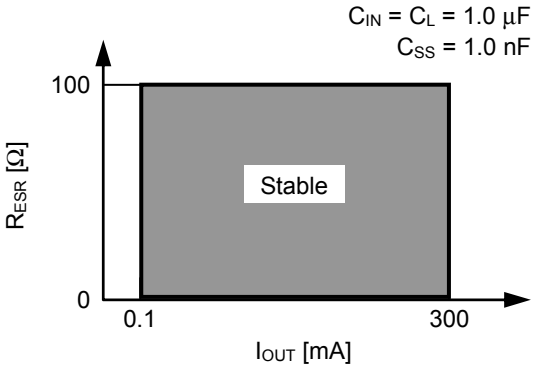

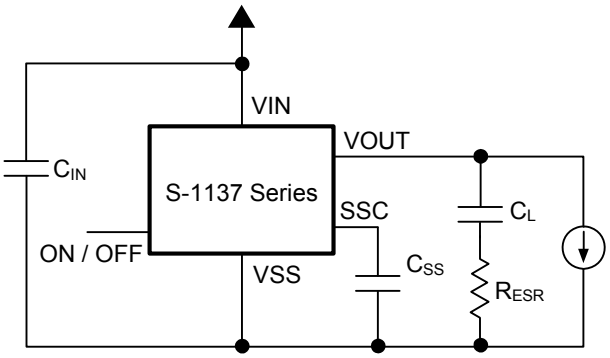

■ Marking Specifications

1. SOT-89-5

Top view

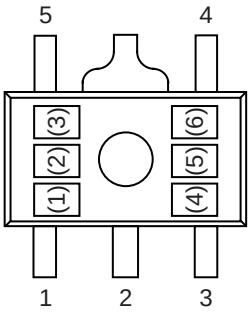

(1) to (3) : Product code (Refer to **Product name vs. Product code**)
(4) to (6) : Lot number

Product name vs. Product code

(a) S-1137 Series A type

Product Name	Product code		
	(1)	(2)	(3)
S-1137A12-U5T1x	V	H	C
S-1137A13-U5T1x	V	H	D
S-1137A14-U5T1x	V	H	E
S-1137A15-U5T1x	V	H	F
S-1137A16-U5T1x	V	H	G
S-1137A17-U5T1x	V	H	H
S-1137A18-U5T1x	V	H	I
S-1137A1J-U5T1x	V	H	J
S-1137A19-U5T1x	V	H	K
S-1137A20-U5T1x	V	H	L
S-1137A21-U5T1x	V	H	M
S-1137A22-U5T1x	V	H	N
S-1137A23-U5T1x	V	H	O
S-1137A24-U5T1x	V	H	P
S-1137A25-U5T1x	V	H	Q
S-1137A26-U5T1x	V	H	R
S-1137A27-U5T1x	V	H	S
S-1137A28-U5T1x	V	H	T
S-1137A2J-U5T1x	V	H	U
S-1137A29-U5T1x	V	H	V
S-1137A30-U5T1x	V	H	W
S-1137A31-U5T1x	V	H	X
S-1137A32-U5T1x	V	H	Y
S-1137A33-U5T1x	V	H	Z
S-1137A34-U5T1x	V	H	2
S-1137A35-U5T1x	V	H	3

(b) S-1137 Series B type

Product Name	Product code		
	(1)	(2)	(3)
S-1137B12-U5T1x	V	I	C
S-1137B13-U5T1x	V	I	D
S-1137B14-U5T1x	V	I	E
S-1137B15-U5T1x	V	I	F
S-1137B16-U5T1x	V	I	G
S-1137B17-U5T1x	V	I	H
S-1137B18-U5T1x	V	I	I
S-1137B1J-U5T1x	V	I	J
S-1137B19-U5T1x	V	I	K
S-1137B20-U5T1x	V	I	L
S-1137B21-U5T1x	V	I	M
S-1137B22-U5T1x	V	I	N
S-1137B23-U5T1x	V	I	O
S-1137B24-U5T1x	V	I	P
S-1137B25-U5T1x	V	I	Q
S-1137B26-U5T1x	V	I	R
S-1137B27-U5T1x	V	I	S
S-1137B28-U5T1x	V	I	T
S-1137B2J-U5T1x	V	I	U
S-1137B29-U5T1x	V	I	V
S-1137B30-U5T1x	V	I	W
S-1137B31-U5T1x	V	I	X
S-1137B32-U5T1x	V	I	Y
S-1137B33-U5T1x	V	I	Z
S-1137B34-U5T1x	V	I	2
S-1137B35-U5T1x	V	I	3

Remark 1. x: G or U
2. Please select products of environmental code = U for Sn 100%, halogen-free products.

(c) S-1137 Series C type

Product Name	Product code		
	(1)	(2)	(3)
S-1137C12-U5T1x	V	J	C
S-1137C13-U5T1x	V	J	D
S-1137C14-U5T1x	V	J	E
S-1137C15-U5T1x	V	J	F
S-1137C16-U5T1x	V	J	G
S-1137C17-U5T1x	V	J	H
S-1137C18-U5T1x	V	J	I
S-1137C1J-U5T1x	V	J	J
S-1137C19-U5T1x	V	J	K
S-1137C20-U5T1x	V	J	L
S-1137C21-U5T1x	V	J	M
S-1137C22-U5T1x	V	J	N
S-1137C23-U5T1x	V	J	O
S-1137C24-U5T1x	V	J	P
S-1137C25-U5T1x	V	J	Q
S-1137C26-U5T1x	V	J	R
S-1137C27-U5T1x	V	J	S
S-1137C28-U5T1x	V	J	T
S-1137C2J-U5T1x	V	J	U
S-1137C29-U5T1x	V	J	V
S-1137C30-U5T1x	V	J	W
S-1137C31-U5T1x	V	J	X
S-1137C32-U5T1x	V	J	Y
S-1137C33-U5T1x	V	J	Z
S-1137C34-U5T1x	V	J	2
S-1137C35-U5T1x	V	J	3

(d) S-1137 Series D type

Product Name	Product code		
	(1)	(2)	(3)
S-1137D12-U5T1x	V	K	C
S-1137D13-U5T1x	V	K	D
S-1137D14-U5T1x	V	K	E
S-1137D15-U5T1x	V	K	F
S-1137D16-U5T1x	V	K	G
S-1137D17-U5T1x	V	K	H
S-1137D18-U5T1x	V	K	I
S-1137D1J-U5T1x	V	K	J
S-1137D19-U5T1x	V	K	K
S-1137D20-U5T1x	V	K	L
S-1137D21-U5T1x	V	K	M
S-1137D22-U5T1x	V	K	N
S-1137D23-U5T1x	V	K	O
S-1137D24-U5T1x	V	K	P
S-1137D25-U5T1x	V	K	Q
S-1137D26-U5T1x	V	K	R
S-1137D27-U5T1x	V	K	S
S-1137D28-U5T1x	V	K	T
S-1137D2J-U5T1x	V	K	U
S-1137D29-U5T1x	V	K	V
S-1137D30-U5T1x	V	K	W
S-1137D31-U5T1x	V	K	X
S-1137D32-U5T1x	V	K	Y
S-1137D33-U5T1x	V	K	Z
S-1137D34-U5T1x	V	K	2
S-1137D35-U5T1x	V	K	3

Remark 1. x: G or U
2. Please select products of environmental code = U for Sn 100%, halogen-free products.

2. SOT-23-5

Top view

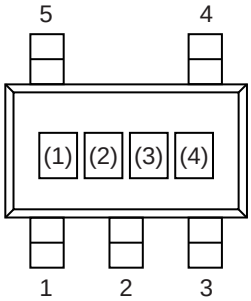

(1) to (3) : Product code (Refer to **Product name vs. Product code**)
(4) : Lot number

Product name vs. Product code

(a) S-1137 Series A type

Product Name	Product code		
	(1)	(2)	(3)
S-1137A12-M5T1y	V	H	C
S-1137A13-M5T1y	V	H	D
S-1137A14-M5T1y	V	H	E
S-1137A15-M5T1y	V	H	F
S-1137A16-M5T1y	V	H	G
S-1137A17-M5T1y	V	H	H
S-1137A18-M5T1y	V	H	I
S-1137A1J-M5T1y	V	H	J
S-1137A19-M5T1y	V	H	K
S-1137A20-M5T1y	V	H	L
S-1137A21-M5T1y	V	H	M
S-1137A22-M5T1y	V	H	N
S-1137A23-M5T1y	V	H	O
S-1137A24-M5T1y	V	H	P
S-1137A25-M5T1y	V	H	Q
S-1137A26-M5T1y	V	H	R
S-1137A27-M5T1y	V	H	S
S-1137A28-M5T1y	V	H	T
S-1137A2J-M5T1y	V	H	U
S-1137A29-M5T1y	V	H	V
S-1137A30-M5T1y	V	H	W
S-1137A31-M5T1y	V	H	X
S-1137A32-M5T1y	V	H	Y
S-1137A33-M5T1y	V	H	Z
S-1137A34-M5T1y	V	H	2
S-1137A35-M5T1y	V	H	3

(b) S-1137 Series B type

Product Name	Product code		
	(1)	(2)	(3)
S-1137B12-M5T1y	V	I	C
S-1137B13-M5T1y	V	I	D
S-1137B14-M5T1y	V	I	E
S-1137B15-M5T1y	V	I	F
S-1137B16-M5T1y	V	I	G
S-1137B17-M5T1y	V	I	H
S-1137B18-M5T1y	V	I	I
S-1137B1J-M5T1y	V	I	J
S-1137B19-M5T1y	V	I	K
S-1137B20-M5T1y	V	I	L
S-1137B21-M5T1y	V	I	M
S-1137B22-M5T1y	V	I	N
S-1137B23-M5T1y	V	I	O
S-1137B24-M5T1y	V	I	P
S-1137B25-M5T1y	V	I	Q
S-1137B26-M5T1y	V	I	R
S-1137B27-M5T1y	V	I	S
S-1137B28-M5T1y	V	I	T
S-1137B2J-M5T1y	V	I	U
S-1137B29-M5T1y	V	I	V
S-1137B30-M5T1y	V	I	W
S-1137B31-M5T1y	V	I	X
S-1137B32-M5T1y	V	I	Y
S-1137B33-M5T1y	V	I	Z
S-1137B34-M5T1y	V	I	2
S-1137B35-M5T1y	V	I	3

Remark 1. y: S or U
2. Please select products of environmental code = U for Sn 100%, halogen-free products.

(c) S-1137 Series C type

Product Name	Product code		
	(1)	(2)	(3)
S-1137C12-M5T1y	V	J	C
S-1137C13-M5T1y	V	J	D
S-1137C14-M5T1y	V	J	E
S-1137C15-M5T1y	V	J	F
S-1137C16-M5T1y	V	J	G
S-1137C17-M5T1y	V	J	H
S-1137C18-M5T1y	V	J	I
S-1137C1J-M5T1y	V	J	J
S-1137C19-M5T1y	V	J	K
S-1137C20-M5T1y	V	J	L
S-1137C21-M5T1y	V	J	M
S-1137C22-M5T1y	V	J	N
S-1137C23-M5T1y	V	J	O
S-1137C24-M5T1y	V	J	P
S-1137C25-M5T1y	V	J	Q
S-1137C26-M5T1y	V	J	R
S-1137C27-M5T1y	V	J	S
S-1137C28-M5T1y	V	J	T
S-1137C2J-M5T1y	V	J	U
S-1137C29-M5T1y	V	J	V
S-1137C30-M5T1y	V	J	W
S-1137C31-M5T1y	V	J	X
S-1137C32-M5T1y	V	J	Y
S-1137C33-M5T1y	V	J	Z
S-1137C34-M5T1y	V	J	2
S-1137C35-M5T1y	V	J	3

(d) S-1137 Series D type

Product Name	Product code		
	(1)	(2)	(3)
S-1137D12-M5T1y	V	K	C
S-1137D13-M5T1y	V	K	D
S-1137D14-M5T1y	V	K	E
S-1137D15-M5T1y	V	K	F
S-1137D16-M5T1y	V	K	G
S-1137D17-M5T1y	V	K	H
S-1137D18-M5T1y	V	K	I
S-1137D1J-M5T1y	V	K	J
S-1137D19-M5T1y	V	K	K
S-1137D20-M5T1y	V	K	L
S-1137D21-M5T1y	V	K	M
S-1137D22-M5T1y	V	K	N
S-1137D23-M5T1y	V	K	O
S-1137D24-M5T1y	V	K	P
S-1137D25-M5T1y	V	K	Q
S-1137D26-M5T1y	V	K	R
S-1137D27-M5T1y	V	K	S
S-1137D28-M5T1y	V	K	T
S-1137D2J-M5T1y	V	K	U
S-1137D29-M5T1y	V	K	V
S-1137D30-M5T1y	V	K	W
S-1137D31-M5T1y	V	K	X
S-1137D32-M5T1y	V	K	Y
S-1137D33-M5T1y	V	K	Z
S-1137D34-M5T1y	V	K	2
S-1137D35-M5T1y	V	K	3

Remark 1. y: S or U
2. Please select products of environmental code = U for Sn 100%, halogen-free products.

3. SNT-6A(H)

Top view

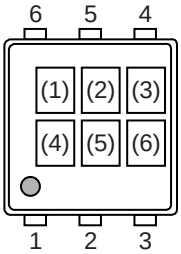

(1) to (3) : Product code (Refer to **Product name vs. Product code**)
(4) to (6) : Lot number

Product name vs. Product code

(a) S-1137 Series A type

Product Name	Product code		
	(1)	(2)	(3)
S-1137A12-I6T2U	V	H	C
S-1137A13-I6T2U	V	H	D
S-1137A14-I6T2U	V	H	E
S-1137A15-I6T2U	V	H	F
S-1137A16-I6T2U	V	H	G
S-1137A17-I6T2U	V	H	H
S-1137A18-I6T2U	V	H	I
S-1137A1J-I6T2U	V	H	J
S-1137A19-I6T2U	V	H	K
S-1137A20-I6T2U	V	H	L
S-1137A21-I6T2U	V	H	M
S-1137A22-I6T2U	V	H	N
S-1137A23-I6T2U	V	H	O
S-1137A24-I6T2U	V	H	P
S-1137A25-I6T2U	V	H	Q
S-1137A26-I6T2U	V	H	R
S-1137A27-I6T2U	V	H	S
S-1137A28-I6T2U	V	H	T
S-1137A2J-I6T2U	V	H	U
S-1137A29-I6T2U	V	H	V
S-1137A30-I6T2U	V	H	W
S-1137A31-I6T2U	V	H	X
S-1137A32-I6T2U	V	H	Y
S-1137A33-I6T2U	V	H	Z
S-1137A34-I6T2U	V	H	2
S-1137A35-I6T2U	V	H	3

(b) S-1137 Series B type

Product Name	Product code		
	(1)	(2)	(3)
S-1137B12-I6T2U	V	I	C
S-1137B13-I6T2U	V	I	D
S-1137B14-I6T2U	V	I	E
S-1137B15-I6T2U	V	I	F
S-1137B16-I6T2U	V	I	G
S-1137B17-I6T2U	V	I	H
S-1137B18-I6T2U	V	I	I
S-1137B1J-I6T2U	V	I	J
S-1137B19-I6T2U	V	I	K
S-1137B20-I6T2U	V	I	L
S-1137B21-I6T2U	V	I	M
S-1137B22-I6T2U	V	I	N
S-1137B23-I6T2U	V	I	O
S-1137B24-I6T2U	V	I	P
S-1137B25-I6T2U	V	I	Q
S-1137B26-I6T2U	V	I	R
S-1137B27-I6T2U	V	I	S
S-1137B28-I6T2U	V	I	T
S-1137B2J-I6T2U	V	I	U
S-1137B29-I6T2U	V	I	V
S-1137B30-I6T2U	V	I	W
S-1137B31-I6T2U	V	I	X
S-1137B32-I6T2U	V	I	Y
S-1137B33-I6T2U	V	I	Z
S-1137B34-I6T2U	V	I	2
S-1137B35-I6T2U	V	I	3

(c) S-1137 Series C type

Product Name	Product code		
	(1)	(2)	(3)
S-1137C12-I6T2U	V	J	C
S-1137C13-I6T2U	V	J	D
S-1137C14-I6T2U	V	J	E
S-1137C15-I6T2U	V	J	F
S-1137C16-I6T2U	V	J	G
S-1137C17-I6T2U	V	J	H
S-1137C18-I6T2U	V	J	I
S-1137C1J-I6T2U	V	J	J
S-1137C19-I6T2U	V	J	K
S-1137C20-I6T2U	V	J	L
S-1137C21-I6T2U	V	J	M
S-1137C22-I6T2U	V	J	N
S-1137C23-I6T2U	V	J	O
S-1137C24-I6T2U	V	J	P
S-1137C25-I6T2U	V	J	Q
S-1137C26-I6T2U	V	J	R
S-1137C27-I6T2U	V	J	S
S-1137C28-I6T2U	V	J	T
S-1137C2J-I6T2U	V	J	U
S-1137C29-I6T2U	V	J	V
S-1137C30-I6T2U	V	J	W
S-1137C31-I6T2U	V	J	X
S-1137C32-I6T2U	V	J	Y
S-1137C33-I6T2U	V	J	Z
S-1137C34-I6T2U	V	J	2
S-1137C35-I6T2U	V	J	3

(d) S-1137 Series D type

Product Name	Product code		
	(1)	(2)	(3)
S-1137D12-I6T2U	V	K	C
S-1137D13-I6T2U	V	K	D
S-1137D14-I6T2U	V	K	E
S-1137D15-I6T2U	V	K	F
S-1137D16-I6T2U	V	K	G
S-1137D17-I6T2U	V	K	H
S-1137D18-I6T2U	V	K	I
S-1137D1J-I6T2U	V	K	J
S-1137D19-I6T2U	V	K	K
S-1137D20-I6T2U	V	K	L
S-1137D21-I6T2U	V	K	M
S-1137D22-I6T2U	V	K	N
S-1137D23-I6T2U	V	K	O
S-1137D24-I6T2U	V	K	P
S-1137D25-I6T2U	V	K	Q
S-1137D26-I6T2U	V	K	R
S-1137D27-I6T2U	V	K	S
S-1137D28-I6T2U	V	K	T
S-1137D2J-I6T2U	V	K	U
S-1137D29-I6T2U	V	K	V
S-1137D30-I6T2U	V	K	W
S-1137D31-I6T2U	V	K	X
S-1137D32-I6T2U	V	K	Y
S-1137D33-I6T2U	V	K	Z
S-1137D34-I6T2U	V	K	2
S-1137D35-I6T2U	V	K	3

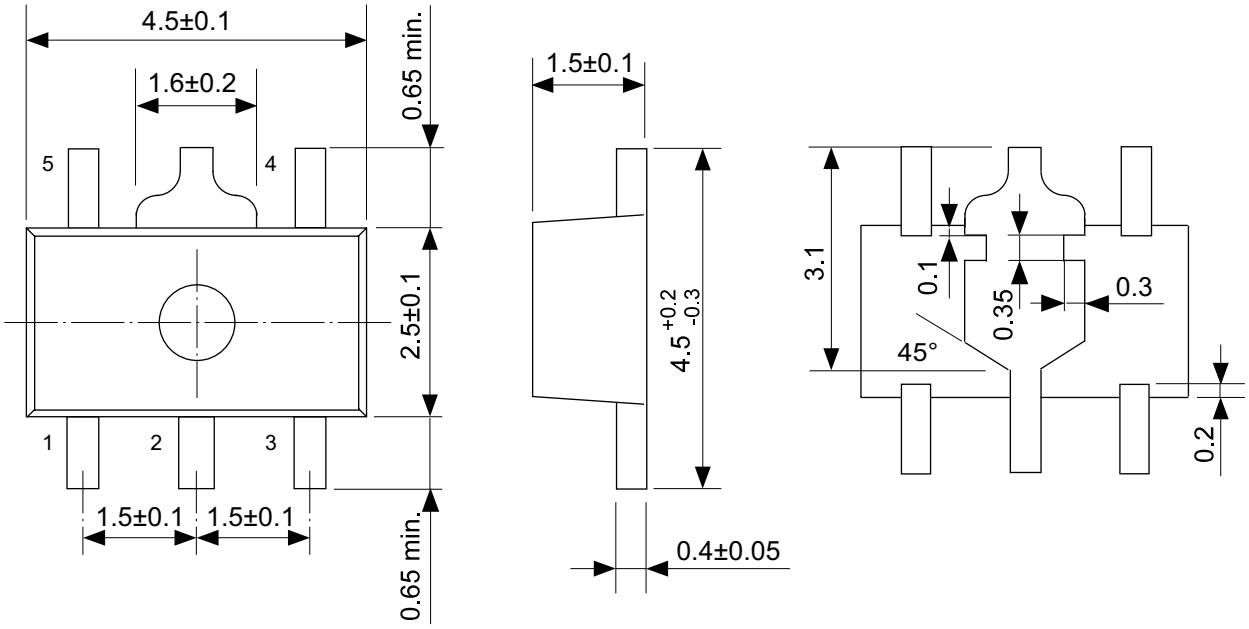

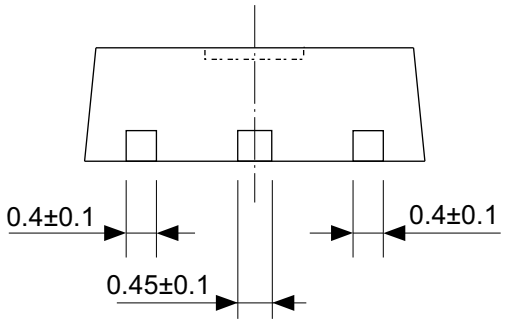

No. UP005-A-P-SD-2.0

TITLE	SOT895-A-PKG Dimensions
No.	UP005-A-P-SD-2.0
ANGLE	
UNIT	mm

ABLIC Inc.

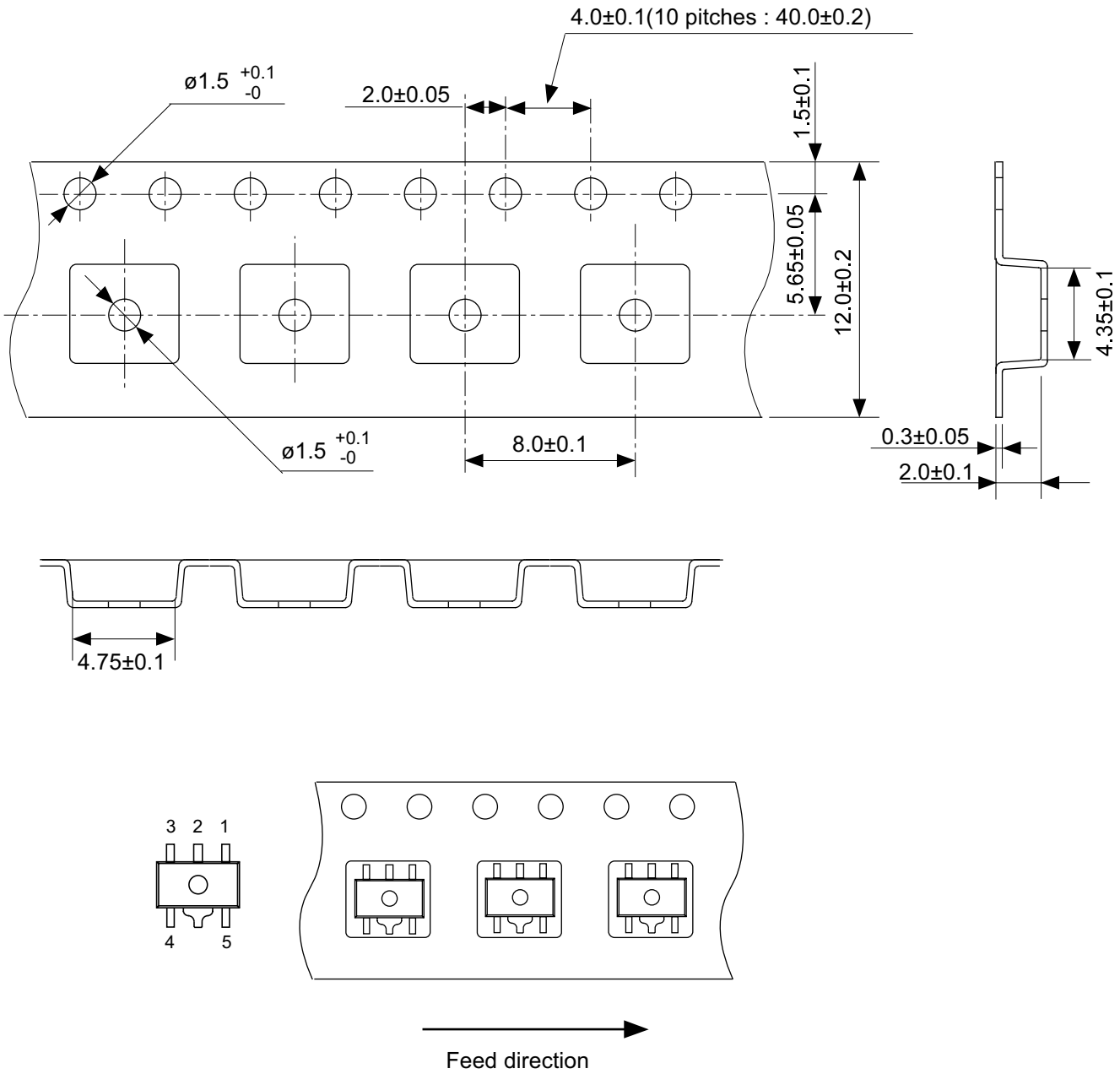

No. UP005-A-C-SD-2.0

TITLE	SOT895-A-Carrier Tape
No.	UP005-A-C-SD-2.0
ANGLE	
UNIT	mm

ABLIC Inc.

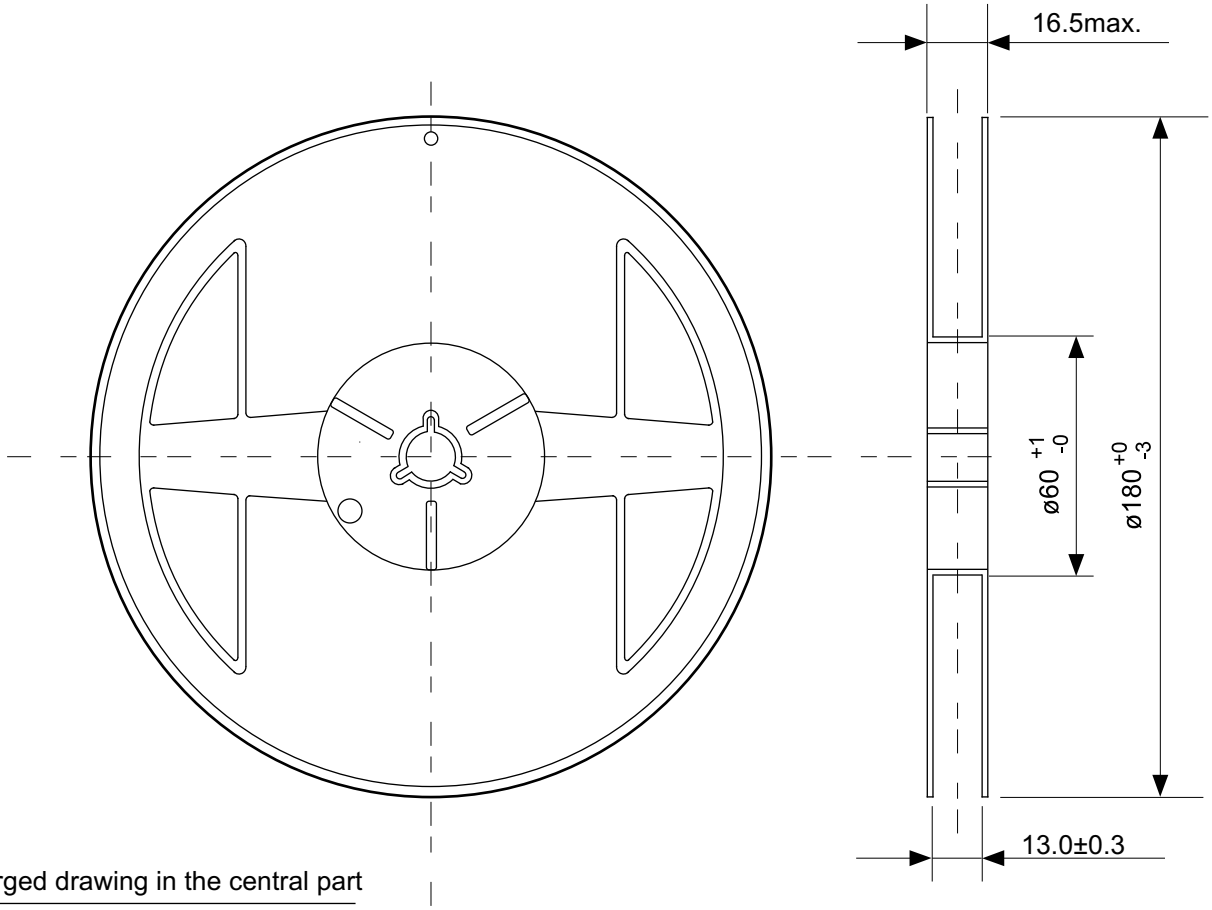

Enlarged drawing in the central part

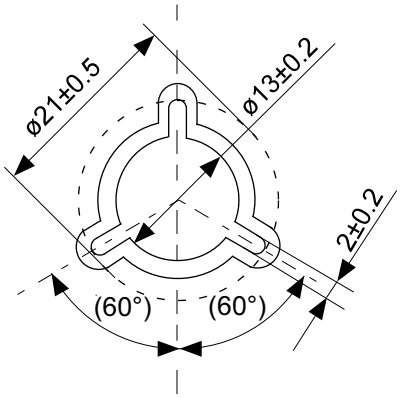

No. UP005-A-R-SD-1.1

TITLE	SOT895-A-Reel		
No.	UP005-A-R-SD-1.1		
ANGLE		QTY.	1,000
UNIT	mm		
ABLIC Inc.			

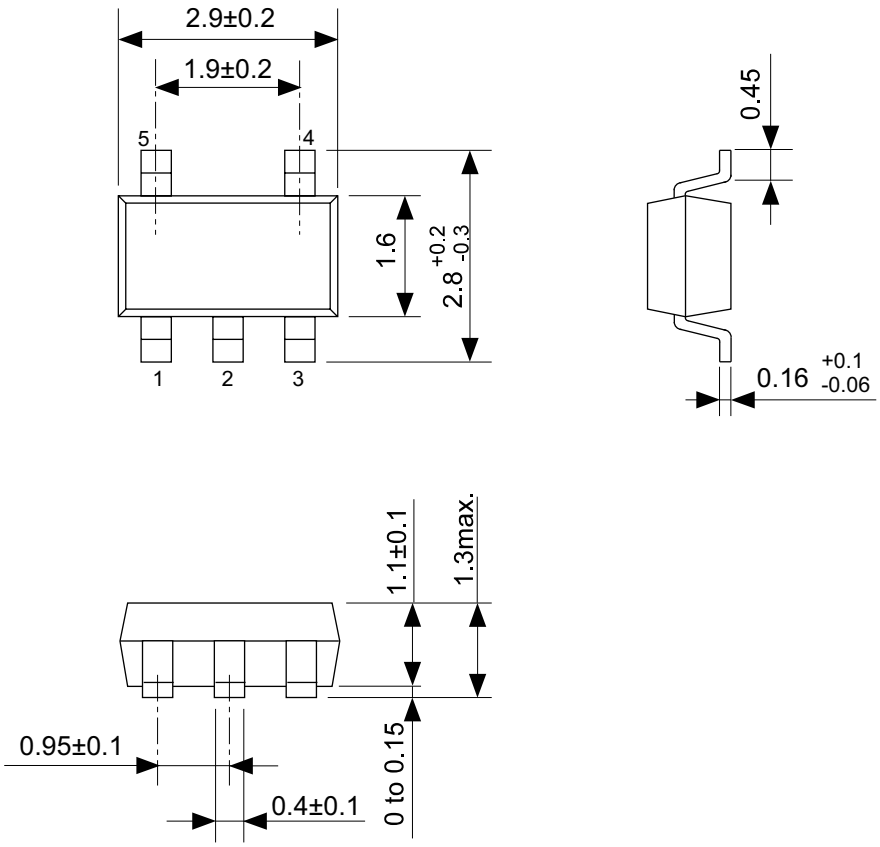

No. MP005-A-P-SD-1.3

TITLE	SOT235-A-PKG Dimensions
No.	MP005-A-P-SD-1.3
ANGLE	
UNIT	mm

ABLIC Inc.

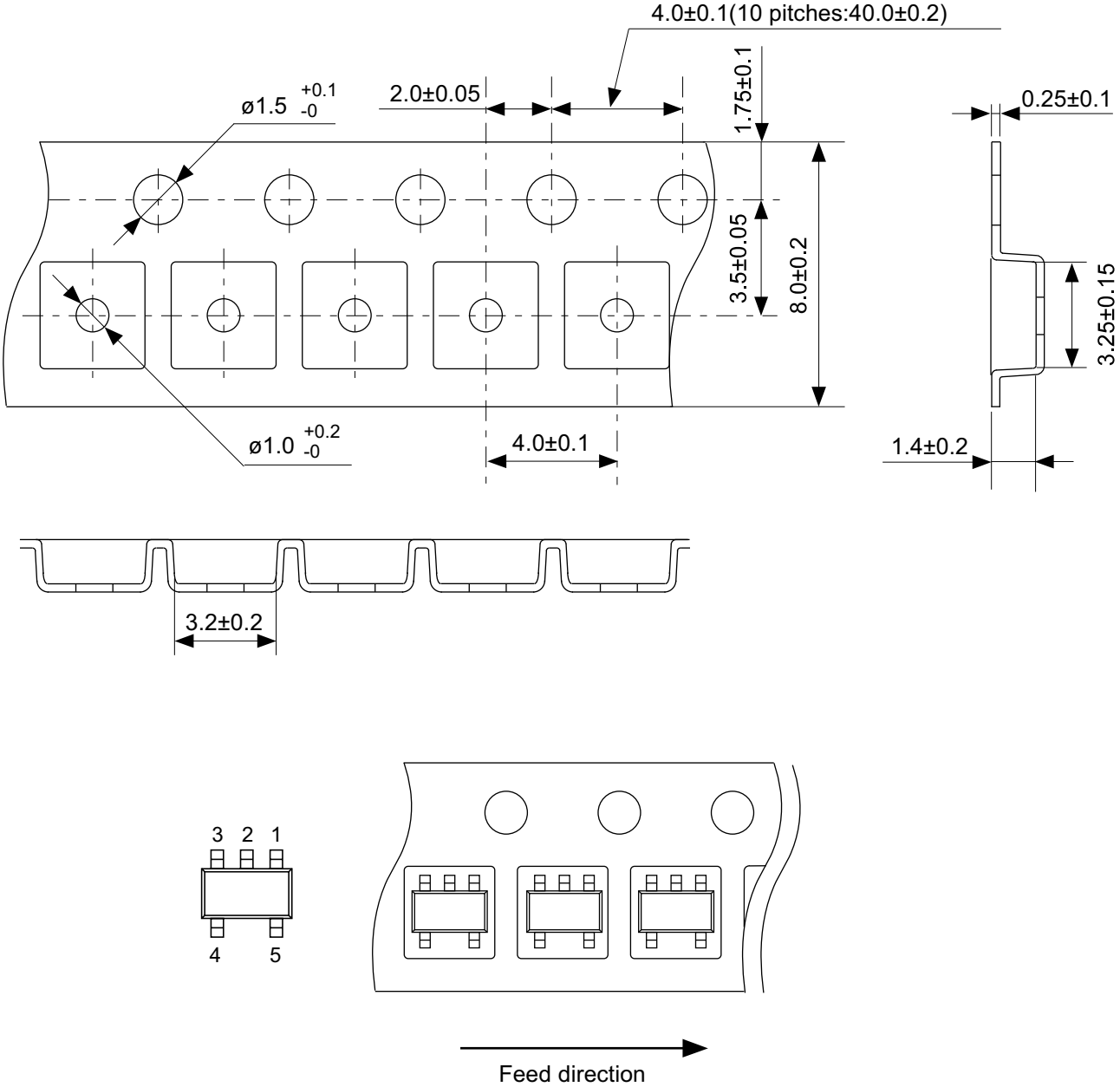

No. MP005-A-C-SD-2.1

TITLE	SOT235-A-Carrier Tape
No.	MP005-A-C-SD-2.1
ANGLE	
UNIT	mm

ABLIC Inc.

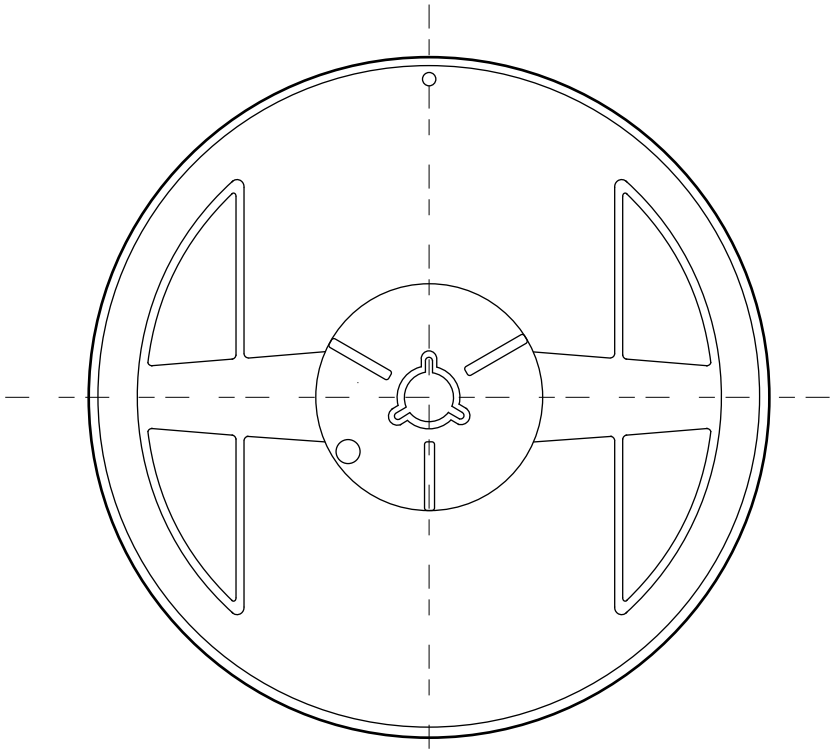

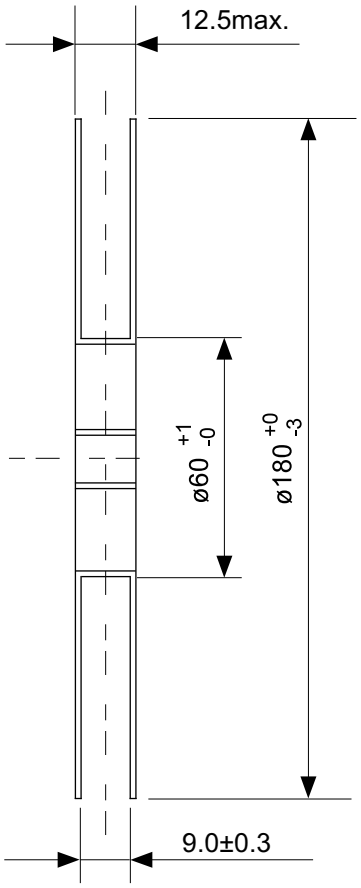

Enlarged drawing in the central part

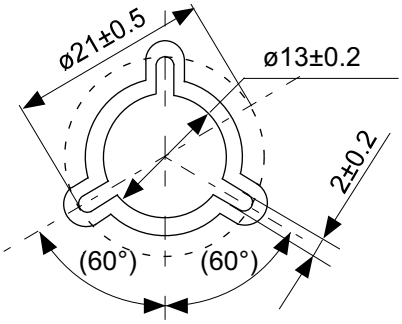

No. MP005-A-R-SD-1.1

TITLE	SOT235-A-Reel		
No.	MP005-A-R-SD-1.1		
ANGLE		QTY.	3,000
UNIT	mm		
ABLIC Inc.			

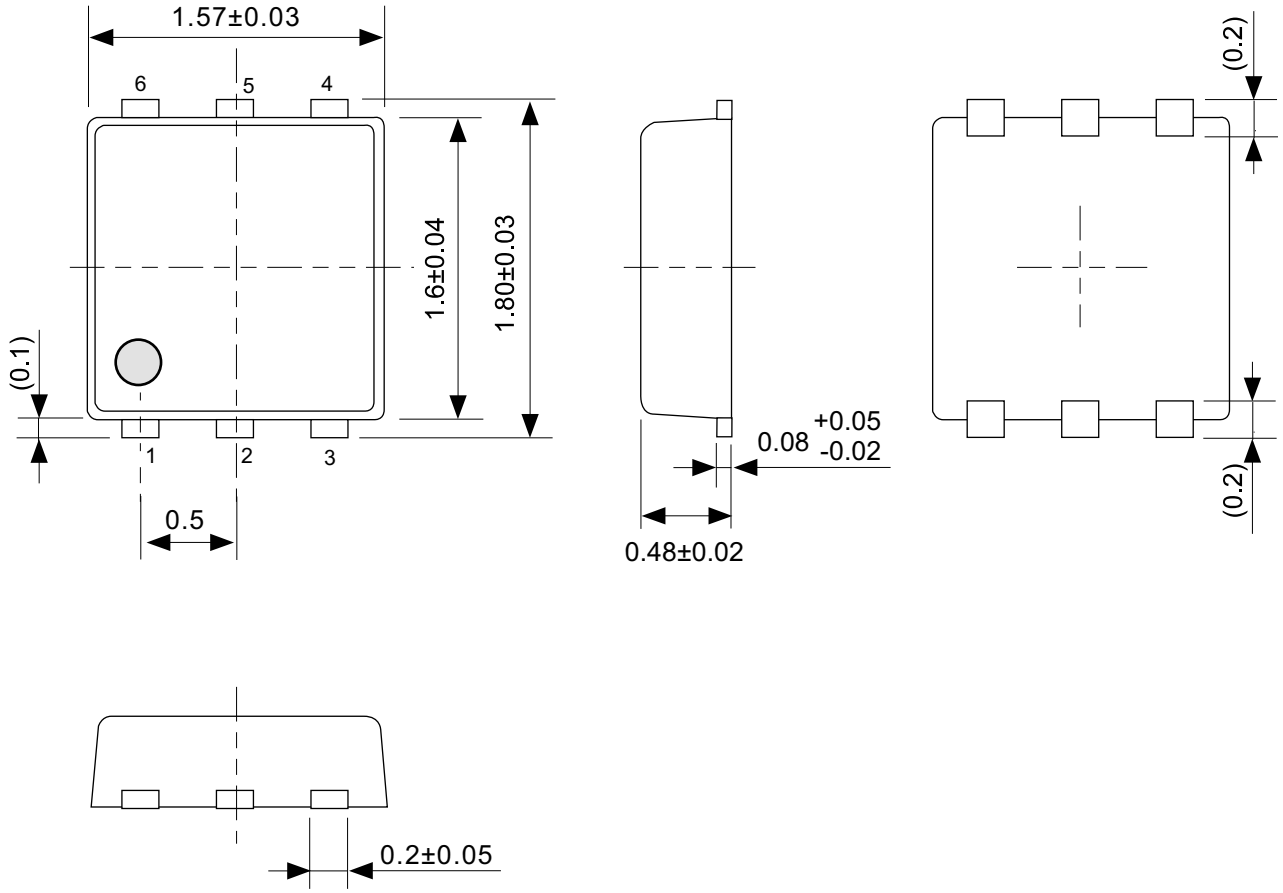

No. PI006-A-P-SD-2.1

TITLE	SNT-6A(H)-A-PKG Dimensions
No.	PI006-A-P-SD-2.1
ANGLE	
UNIT	mm

ABLIC Inc.

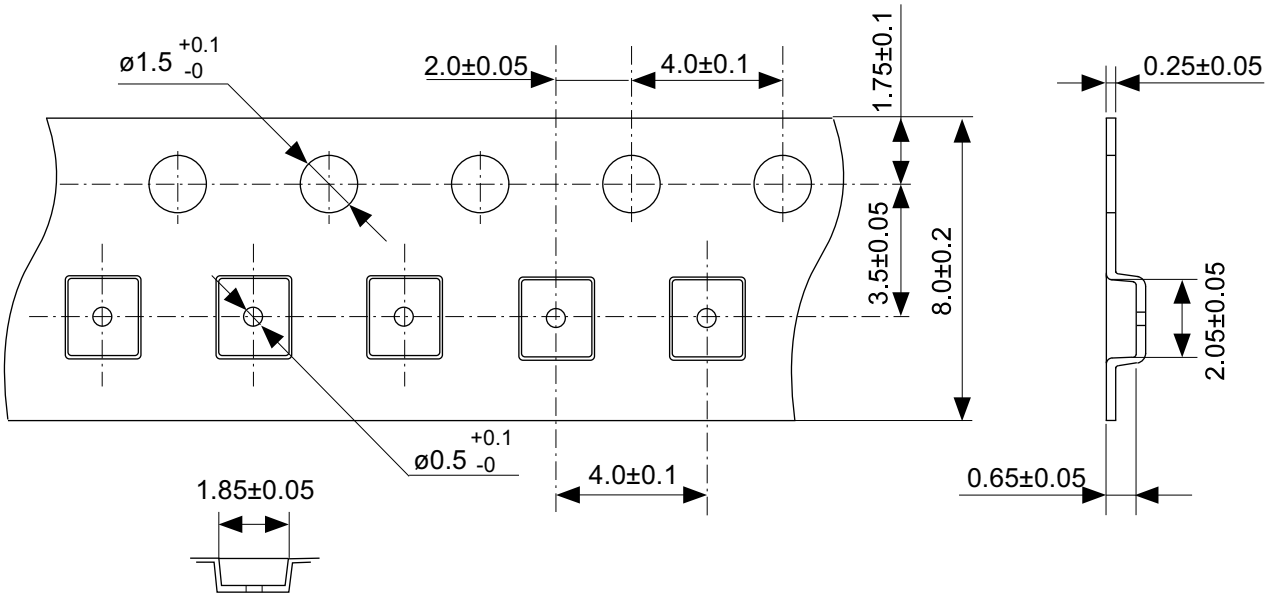

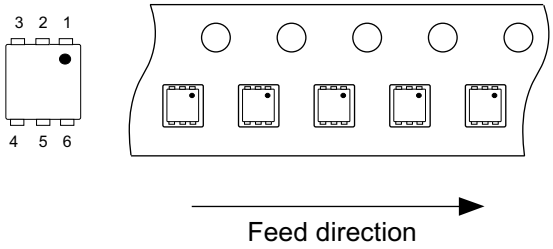

No. PI006-A-C-SD-2.0

TITLE	SNT-6A(H)-A-Carrier Tape
No.	PI006-A-C-SD-2.0
ANGLE	
UNIT	mm

ABLIC Inc.

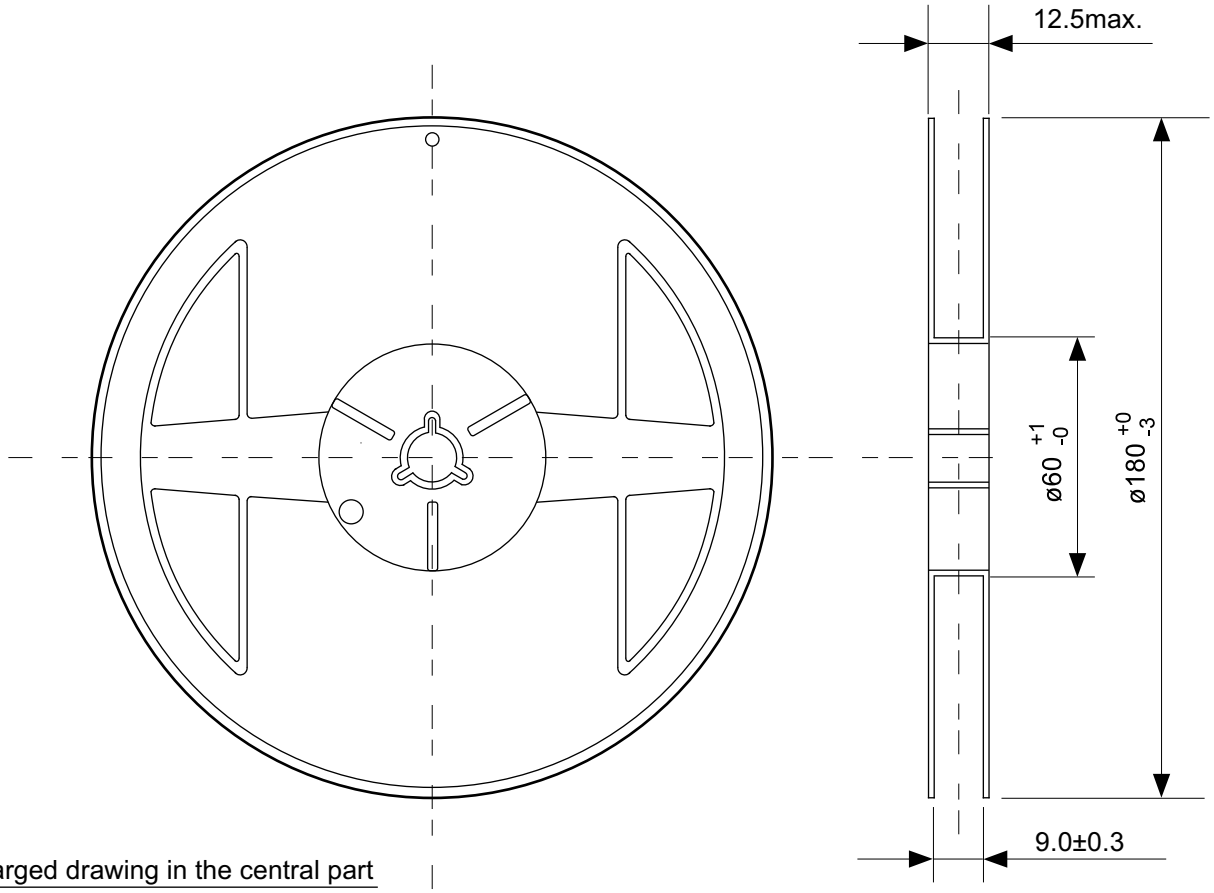

Enlarged drawing in the central part

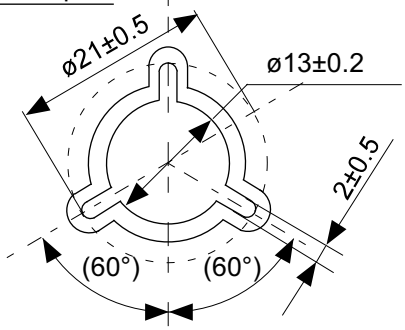

No. PI006-A-R-SD-1.0

TITLE	SNT-6A(H)-A-Reel		
No.	PI006-A-R-SD-1.0		
ANGLE		QTY.	5,000
UNIT	mm		
ABLIC Inc.			

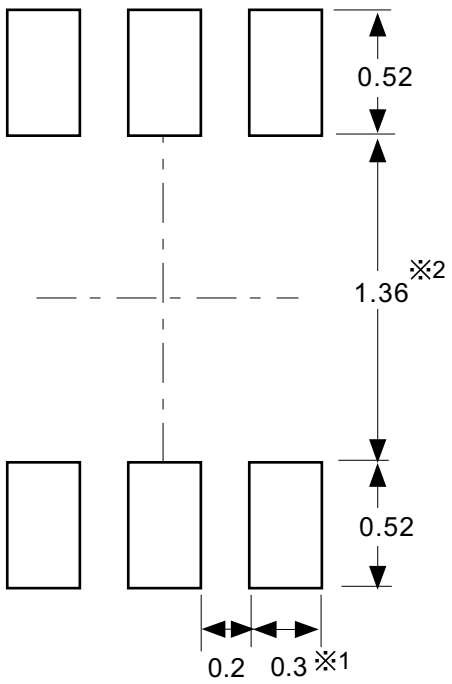

※1. ランドパターンの幅に注意してください (0.25 mm min. / 0.30 mm typ.)。
※2. パッケージ中央にランドパターンを広げないでください (1.30 mm ~ 1.40 mm)。

注意 1. パッケージのモールド樹脂下にシルク印刷やハンダ印刷などしないでください。
2. パッケージ下の配線上のソルダーレジストなどの厚みをランドパターン表面から0.03 mm 以下にしてください。
3. マスク開口サイズと開口位置はランドパターンと合わせてください。
4. 詳細は〝SNTパッケージ活用の手引き〟を参照してください。

※1. Pay attention to the land pattern width (0.25 mm min. / 0.30 mm typ.).
※2. Do not widen the land pattern to the center of the package (1.30 mm to 1.40 mm).

Caution 1. Do not do silkscreen printing and solder printing under the mold resin of the package.
2. The thickness of the solder resist on the wire pattern under the package should be 0.03 mm or less from the land pattern surface.
3. Match the mask aperture size and aperture position with the land pattern.
4. Refer to "SNT Package User's Guide" for details.

※1. 请注意焊盘模式的宽度 (0.25 mm min. / 0.30 mm typ.)。
※2. 请勿向封装中间扩展焊盘模式 (1.30 mm ~ 1.40 mm)。

注意 1. 请勿在树脂型封装的下面印刷丝网、焊锡。
2. 在封装下、布线上的阻焊膜厚度（从焊盘模式表面起）请控制在 0.03 mm 以下。
3. 钢网的开口尺寸和开口位置请与焊盘模式对齐。
4. 详细内容请参阅 "SNT 封装的应用指南"。

No. PI006-A-L-SD-4.1

TITLE	SNT-6A(H)-A -Land Recommendation
No.	PI006-A-L-SD-4.1
ANGLE	
UNIT	mm

ABLIC Inc.

Disclaimers (Handling Precautions)

1. All the information described herein (product data, specifications, figures, tables, programs, algorithms and application circuit examples, etc.) is current as of publishing date of this document and is subject to change without notice.
2. The circuit examples and the usages described herein are for reference only, and do not guarantee the success of any specific mass-production design.
   ABLIC Inc. is not liable for any losses, damages, claims or demands caused by the reasons other than the products described herein (hereinafter "the products") or infringement of third-party intellectual property right and any other right due to the use of the information described herein.
3. ABLIC Inc. is not liable for any losses, damages, claims or demands caused by the incorrect information described herein.
4. Be careful to use the products within their ranges described herein. Pay special attention for use to the absolute maximum ratings, operation voltage range and electrical characteristics, etc.
   ABLIC Inc. is not liable for any losses, damages, claims or demands caused by failures and / or accidents, etc. due to the use of the products outside their specified ranges.
5. Before using the products, confirm their applications, and the laws and regulations of the region or country where they are used and verify suitability, safety and other factors for the intended use.
6. When exporting the products, comply with the Foreign Exchange and Foreign Trade Act and all other export-related laws, and follow the required procedures.
7. The products are strictly prohibited from using, providing or exporting for the purposes of the development of weapons of mass destruction or military use. ABLIC Inc. is not liable for any losses, damages, claims or demands caused by any provision or export to the person or entity who intends to develop, manufacture, use or store nuclear, biological or chemical weapons or missiles, or use any other military purposes.
8. The products are not designed to be used as part of any device or equipment that may affect the human body, human life, or assets (such as medical equipment, disaster prevention systems, security systems, combustion control systems, infrastructure control systems, vehicle equipment, traffic systems, in-vehicle equipment, aviation equipment, aerospace equipment, and nuclear-related equipment), excluding when specified for in-vehicle use or other uses by ABLIC, Inc. Do not apply the products to the above listed devices and equipments.
   ABLIC Inc. is not liable for any losses, damages, claims or demands caused by unauthorized or unspecified use of the products.
9. In general, semiconductor products may fail or malfunction with some probability. The user of the products should therefore take responsibility to give thorough consideration to safety design including redundancy, fire spread prevention measures, and malfunction prevention to prevent accidents causing injury or death, fires and social damage, etc. that may ensue from the products' failure or malfunction.
   The entire system in which the products are used must be sufficiently evaluated and judged whether the products are allowed to apply for the system on customer's own responsibility.
10. The products are not designed to be radiation-proof. The necessary radiation measures should be taken in the product design by the customer depending on the intended use.
11. The products do not affect human health under normal use. However, they contain chemical substances and heavy metals and should therefore not be put in the mouth. The fracture surfaces of wafers and chips may be sharp. Be careful when handling these with the bare hands to prevent injuries, etc.
12. When disposing of the products, comply with the laws and ordinances of the country or region where they are used.
13. The information described herein contains copyright information and know-how of ABLIC Inc. The information described herein does not convey any license under any intellectual property rights or any other rights belonging to ABLIC Inc. or a third party. Reproduction or copying of the information from this document or any part of this document described herein for the purpose of disclosing it to a third-party is strictly prohibited without the express permission of ABLIC Inc.
14. For more details on the information described herein or any other questions, please contact ABLIC Inc.'s sales representative.
15. This Disclaimers have been delivered in a text using the Japanese language, which text, despite any translations into the English language and the Chinese language, shall be controlling.

2.4-2019.07

Mouser Electronics

Authorized Distributor

Click to View Pricing, Inventory, Delivery & Lifecycle Information:

ABLIC:

S-1137D1J-U5T1G S-1137D20-U5T1G S-1137D21-U5T1G S-1137D22-U5T1G S-1137D23-U5T1G S-1137D24-U5T1G S-1137D25-U5T1G S-1137D26-U5T1G S-1137D27-U5T1G S-1137D28-U5T1G S-1137D29-U5T1G S-1137D2J-U5T1G S-1137D30-U5T1G S-1137D31-U5T1G S-1137D32-U5T1G S-1137D33-U5T1G S-1137D34-U5T1G S-1137D35-U5T1G S-1137A12-U5T1G S-1137A13-U5T1G S-1137A14-U5T1G S-1137A15-U5T1G S-1137A16-U5T1G S-1137A17-U5T1G S-1137A18-U5T1G S-1137A19-U5T1G S-1137A1J-U5T1G S-1137A20-U5T1G S-1137A21-U5T1G S-1137A22-U5T1G S-1137A23-U5T1G S-1137A24-U5T1G S-1137A25-U5T1G S-1137A26-U5T1G S-1137A27-U5T1G S-1137A28-U5T1G S-1137A29-U5T1G S-1137A2J-U5T1G S-1137A30-U5T1G S-1137A31-U5T1G S-1137A32-U5T1G S-1137A33-U5T1G S-1137A34-U5T1G S-1137A35-U5T1G S-1137B12-U5T1G S-1137B13-U5T1G S-1137B14-U5T1G S-1137B15-U5T1G S-1137B16-U5T1G S-1137B17-U5T1G S-1137B18-U5T1G S-1137B19-U5T1G S-1137B1J-U5T1G S-1137B20-U5T1G S-1137B21-U5T1G S-1137B22-U5T1G S-1137B23-U5T1G S-1137B24-U5T1G S-1137B25-U5T1G S-1137B26-U5T1G S-1137B27-U5T1G S-1137B28-U5T1G S-1137B29-U5T1G S-1137B2J-U5T1G S-1137B30-U5T1G S-1137B31-U5T1G S-1137B32-U5T1G S-1137B33-U5T1G S-1137B34-U5T1G S-1137B35-U5T1G S-1137C12-U5T1G S-1137C13-U5T1G S-1137C14-U5T1G S-1137C15-U5T1G S-1137C16-U5T1G S-1137C17-U5T1G S-1137C18-U5T1G S-1137C19-U5T1G S-1137C1J-U5T1G S-1137C20-U5T1G S-1137C21-U5T1G S-1137C22-U5T1G S-1137C23-U5T1G S-1137C24-U5T1G S-1137C25-U5T1G S-1137C26-U5T1G S-1137C27-U5T1G S-1137C28-U5T1G S-1137C29-U5T1G S-1137C2J-U5T1G S-1137C30-U5T1G S-1137C31-U5T1G S-1137C32-U5T1G S-1137C33-U5T1G S-1137C34-U5T1G S-1137C35-U5T1G S-1137D12-U5T1G S-1137D13-U5T1G S-1137D14-U5T1G S-1137D15-U5T1G

Компания «ЭлектроПласт» предлагает заключение долгосрочных отношений при поставках импортных электронных компонентов на взаимовыгодных условиях!

Наши преимущества:

- Оперативные поставки широкого спектра электронных компонентов отечественного и импортного производства напрямую от производителей и с крупнейших мировых складов;
- Поставка более 17-ти миллионов наименований электронных компонентов;
- Поставка сложных, дефицитных, либо снятых с производства позиций;
- Оперативные сроки поставки под заказ (от 5 рабочих дней);
- Экспресс доставка в любую точку России;
- Техническая поддержка проекта, помощь в подборе аналогов, поставка прототипов;
- Система менеджмента качества сертифицирована по Международному стандарту ISO 9001;
- Лицензия ФСБ на осуществление работ с использованием сведений, составляющих государственную тайну;
- Поставка специализированных компонентов (Xilinx, Altera, Analog Devices, Intersil, Interpoint, Microsemi, Aeroflex, Peregrine, Syfer, Eurofarad, Texas Instrument, Miteq, Cobham, E2V, MA-COM, Hittite, Mini-Circuits,General Dynamics и др.);

Помимо этого, одним из направлений компании «ЭлектроПласт» является направление «Источники питания». Мы предлагаем Вам помощь Конструкторского отдела:

- Подбор оптимального решения, техническое обоснование при выборе компонента;
- Подбор аналогов;
- Консультации по применению компонента;
- Поставка образцов и прототипов;
- Техническая поддержка проекта;
- Защита от снятия компонента с производства.

Как с нами связаться

Телефон: 8 (812) 309 58 32 (многоканальный)
Факс: 8 (812) 320-02-42
Электронная почта: org@eplast1.ru
Адрес: 198099, г. Санкт-Петербург, ул. Калинина, дом 2, корпус 4, литера А.