Description

The AH3762Q is an AEC-Q100 qualified high-voltage, high-sensitivity Hall-Effect latch IC designed for brushless DC-motor commutation speed measurement, angular or linear encoders and position sensors in automotive applications. To support a wide range of demanding applications, the design is optimized to operate over the supply range of 3.0V to 28V. With chopper stabilized architecture and an internal bandgap regulator to provide temperature compensated supply for internal circuits, the AH3762Q provides a reliable solution over the whole operating range. For robustness and protection, the device has a reverse blocking diode with a Zener clamp on the supply. The output has an overcurrent limit and a Zener clamp.

The single, open-drain output can be switched on with South pole of sufficient strength and switched off with North pole of sufficient strength. When the magnetic flux density (B) perpendicular to the package is larger than the operate point (Bop) the output is switched on (pulled low). The output is held latched until magnetic flux density reverses and becomes lower than the release point (Brp).

The magnetic operating and release polarity is opposite for SOT23 and SC59 packages. SOT23 and SIP-3 (Ammo Pack), SIP-3 (Bulk Pack) packages will require south pole to the part marking side to operate while SC59 will require south pole to the non part-marking side.

Features

- Bipolar Latch Operation (South Pole: On, North Pole: off)
- High Sensitivity: Bop and Brp of +25G and -25G Typical
- Single Open-Drain Output with Overcurrent Limit
- 3.0V to 28V Operating Voltage Range
- Chopper Stabilized Design Provides
  - Superior Temperature Stability
  - Minimal Switch Point Drift
  - Enhanced Immunity to Stress
- Good RF Noise Immunity
- Reverse Blocking Diode
- Zener Clamp on Supply and Output Pins
- -40°C to +150°C Operating Temperature
- ESD: HBM ＞ 8kV, CDM: >2kV
- AEC-Q100 Grade 0 Qualified
- Industry Standard SC59, SOT23 and SIP-3 (Ammo Pack), SIP-3 (Bulk Pack) Packages
- **Totally Lead-Free & Fully RoHS Compliant (Notes 1 & 2)**
- **Halogen and Antimony Free. “Green Device (Note 3)**
- **Qualified to AEC-Q100 Standards for High Reliability**
- **PPAP Capable (Note 4)**

Pin Assignments

(Top View)

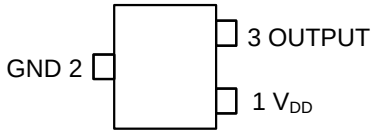

SC59 and SOT23

(Top View)

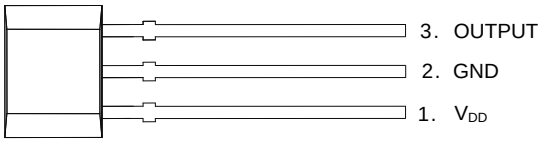

SIP-3 (Ammo Pack), SIP-3 (Bulk Pack)

Applications

- Brushless DC-Motor Commutation
- Revolution Per Minute (RPM) Measurement
- Angular and Linear Encoder and Position Sensing and Indexing
- Flow Meters
- Contactless Commutation, Speed Measurement and Angular Position Sensing/Indexing in Automotive Applications

Notes:
1. No purposely added lead. Fully EU Directive 2002/95/EC (RoHS), 2011/65/EU (RoHS 2) & 2015/863/EU (RoHS 3) compliant.
2. See https://www.diodes.com/quality/lead-free/ for more information about Diodes Incorporated’s definitions of Halogen- and Antimony-free, "Green" and Lead-free.
3. Halogen- and Antimony-free "Green” products are defined as those which contain <900ppm bromine, <900ppm chlorine (<1500ppm total Br + Cl) and <1000ppm antimony compounds.
4. Automotive products are AEC-Q100 qualified and are PPAP capable. Refer to https://www.diodes.com/quality/.

© Diodes Incorporated

Typical Applications Circuit (Note 5)

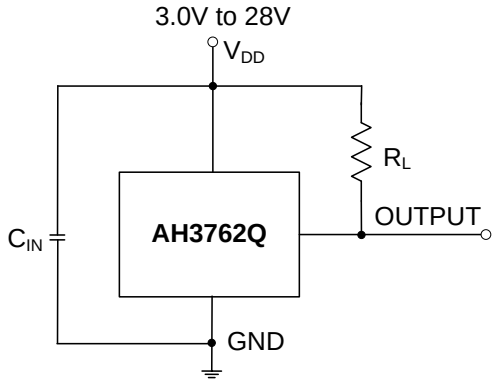

Note: 5. C_{IN} is for power stabilization and to strengthen the noise immunity, the recommended capacitance is 10nF ~ 100nF. R_L is the pull-up resistor.

Pin Descriptions

Package: SC59, SOT23 and SIP-3 (Ammo Pack), SIP-3 (Bulk Pack)

Pin Number	Pin Name	Function
1	V_{DD}	Power Supply Input
2	GND	Ground
3	OUTPUT	Output Pin

Functional Block Diagram

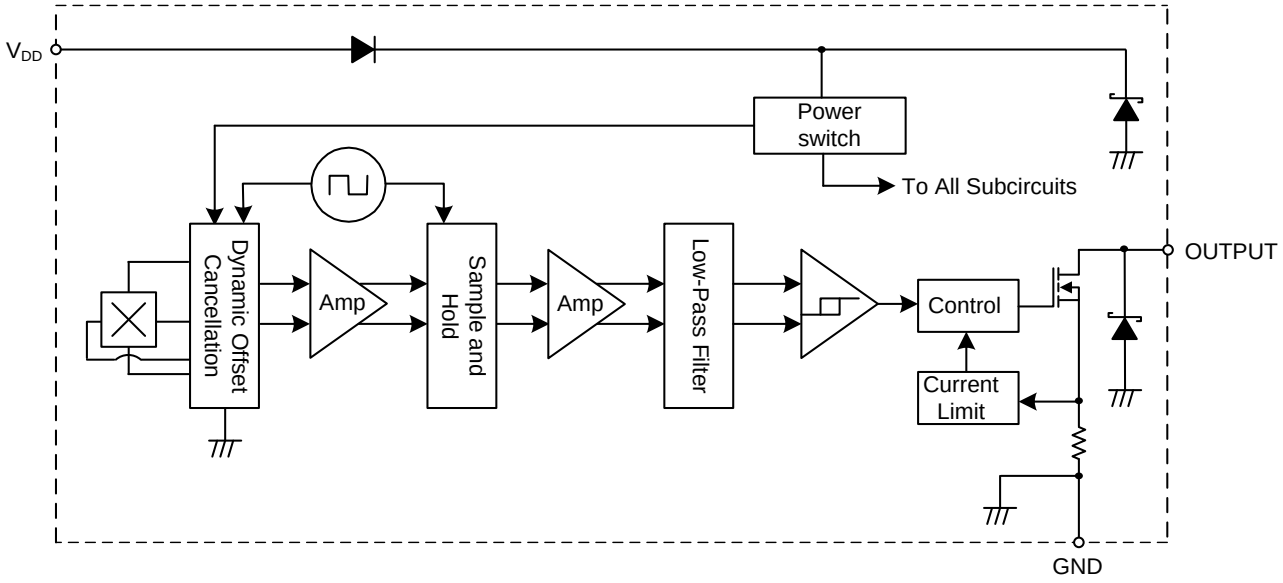

© Diodes Incorporated

Absolute Maximum Ratings (Notes 6 and 7) (@T_A = +25°C, unless otherwise specified.)

Symbol	Characteristic		Value	Unit
V_{DD}	Supply Voltage (Note 7)		32	V
V_{DDR}	Reverse Supply Voltage (Note 7)		-32	V
V_{OUT_MAX}	Output Off Voltage (Note 7)		32	V
I_{OUT}	Continuous Output Current		60	mA
I_{OUT_R}	Reverse Output Current		-50	mA
B	Magnetic Flux Density		Unlimited	
P_D	Package Power Dissipation	SIP-3 (Ammo Pack), SIP-3 (Bulk Pack)	550	mW
		SC59 and SOT23	230	
Ts	Storage Temperature Range		-65 to +165	°C
T_J	Maximum Junction Temperature		+150	°C
ESD HBM	Electros Static Discharge Withstand - Human Body Model (HBM)		8	kV
ESD MM	Electros Static Discharge Withstand - Machine Model (MM)		800	V
ESD CDM	Electros Static Discharge Withstand - Charged Device Model (CDM)		2	kV

Notes: 6. Stresses greater than the 'Absolute Maximum Ratings' specified above may cause permanent damage to the device. These are stress ratings only; functional operation of the device at these or any other conditions exceeding those indicated in this specification is not implied. Device reliability may be affected by exposure to absolute maximum rating conditions for extended periods of time.

7. The absolute maximum V_{DD} of 32V is a transient stress rating and is not meant as a functional operating condition. It is not recommended to operate the device at the absolute maximum rated conditions for any period of time.

Recommended Operating Conditions (@T_A = -40°C to +150°C, unless otherwise specified.)

Symbol	Parameter	Conditions	Rating	Unit
V_{DD}	Supply Voltage	Operating	3.0 to 28	V
T_A	Operating Temperature Range	Operating	-40 to +150	°C

Electrical Characteristics (Notes 8 and 9) (@T_A = -40°C to +150°C, V_{DD} = 3V to 28V, unless otherwise specified.)

Symbol	Parameter	Conditions	Min	Typ	Max	Unit
V_{OUT_ON}	Output ON Voltage	I_{OUT} = 20mA, B > Bop	-	0.2	0.4	V
I_{LKG}	Output Leakage Current (When Output is Off)	V_{OUT} = 28V, B < Brp, Output off	-	<0.1	10	µA
I_{DD}	Supply Current	Output open, T_A = +25°C	-	3	3.5	mA
		Output open, T_A = -40 to +150°C	-	-	4	mA
I_{DD_R}	Reverse Supply Current	V_{DD} = -18V, T_A = +25°C	-	0.6	-	µA
		V_{DD} = -18V, T_A = -40 to +150°C	-	0.6	1,500	µA
		V_{DD} = -28V, T_A = +25°C	-	1.6	-	µA
		V_{DD} = -28V, T_A = -40 to +150°C	-	1.6	2,500	µA
t_{P_ON}	Device Power-On Time (Start-Up Time)	V_{DD} >= 3V, B > Bop (Note 8)	-	10	-	µs
f_c	Chopping Frequency	V_{DD} >= 3V	-	800	-	kHz
t_d	Response Time Delay (Time from Magnetic Threshold Reached to the Start of the Output Rise or Fall)	(Note 10)	-	3.75	-	µs
t_r	Output Rising Time (External Pull-Up Resistor R_L and Load Capacitance Dependent)	R_L = 1kΩ, C_L = 20pF	-	0.2	1	µs
t_f	Output Falling Time (Internal Switch Resistance and load capacitance dependent)	R_L = 1kΩ, C_L = 20pF	-	0.1	1	µs
I_{OCL}	Output Current Limit	B > Bop, (Note 11)	30	-	55	mA
V_Z	Zener Clamp Voltage	I_{DD} = 5mA	28	-	-	V

Notes: 8. When power is initially turned on, V_{DD} must be within its correct operating range (3.0V to 28V) to guarantee the output sampling. The output state is valid after the start-up time of 10µs typical from the operating voltage reaching 3V.

9. Typical values are defined at T_A = +25°C, V_{DD} = 12V. Maximum and minimum values over the operating temperature range is not tested in production but guaranteed by design, process control and characterization.

10. Guaranteed by design, process control and characterization. Not tested in production.

11. The device will limit the output current I_{OUT} to current limit of I_{OCL}.

© Diodes Incorporated

Magnetic Characteristics (Notes 12 and 13) (T_A = -40°C to +150°C, V_{DD} = 3.0V to 28V, unless otherwise specified.)

(1mT=10 Gauss)

Symbol	Parameter	Conditions	Min	Typ	Max	Unit
Bop (South pole to part marking side for SOT23 and SIP-3 (Ammo Pack), SIP-3 (Bulk Pack) packages; South pole to the non-part marking side for SC59 package. See diagram below)	Operation Point	V_{DD} = 12V, T_A = +25°C	-	25	-	Gauss
		T_A = -40°C to +150°C	10	25	40	
Brp (North pole to part marking side for SOT23 and SIP-3 (Ammo Pack), SIP-3 (Bulk Pack) packages; North pole to the non-part marking side for SC59 package. See diagram below)	Release Point	V_{DD} = 12V, T_A = +25°C	-	-25	-	
		T_A = -40°C to +150°C	-40	-25	-10	
B_{HY} (|Bopx|-|Brpx|)	Hysteresis (Note 14)	V_{DD} = 12V, T_A = +25°C	-	50	-	
		T_A = -40°C to +150°C	20	50	80	

Notes: 12. When power is initially turned on, V_{DD} must be within its correct operating range (3.0V to 28V) to guarantee the output sampling. The output state is valid after the start-up time of 10µs typical from the operating voltage reaching 3V.

13. Typical values are defined at T_A = +25°C, V_{DD} = 12V. Maximum and minimum values over the operating temperature range is not tested in production but guaranteed by design, process control and characterization.

14. Maximum and minimum hysteresis is guaranteed by design, process control and characterization.

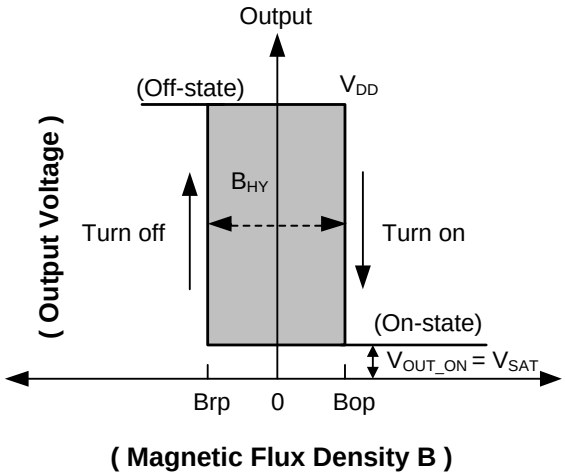

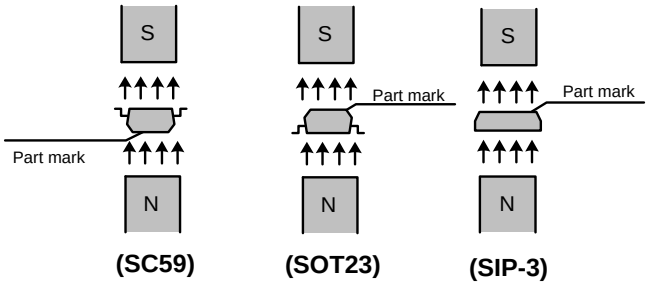

© Diodes Incorporated

Typical Operating Characteristics

Output Switch Operate and Release Points (Magnetic Thresholds) – Bop and Brp

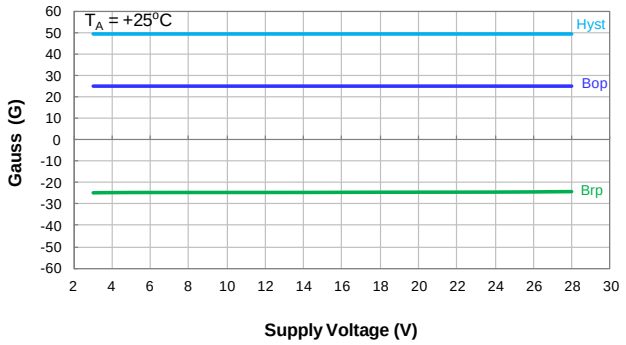

Switch Points Bop and Brp vs Supply Voltage

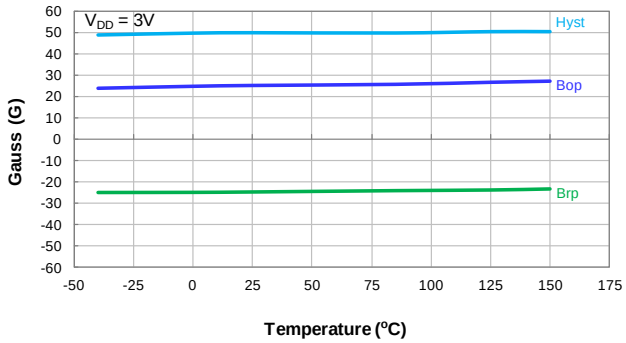

Switch Points Bop and Brp vs Temperature

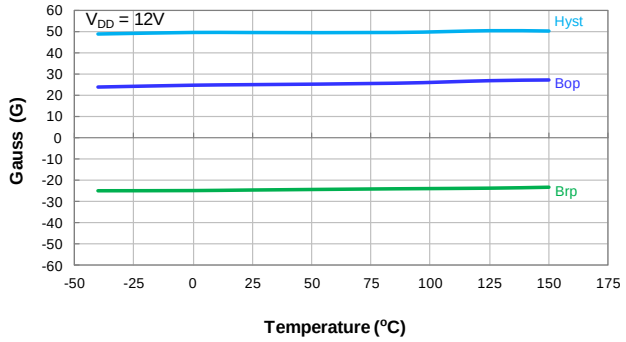

Switch Points Bop and Brp vs Temperature

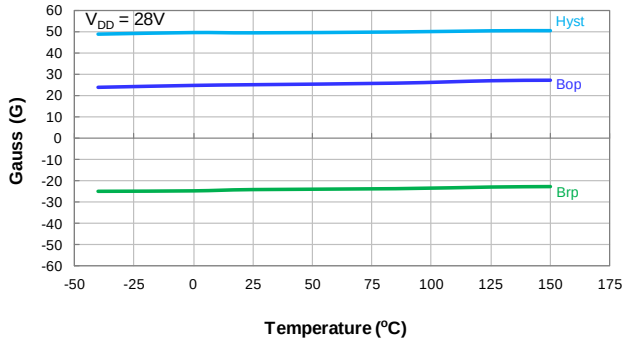

Switch Points Bop and Brp vs Temperature

Supply Current

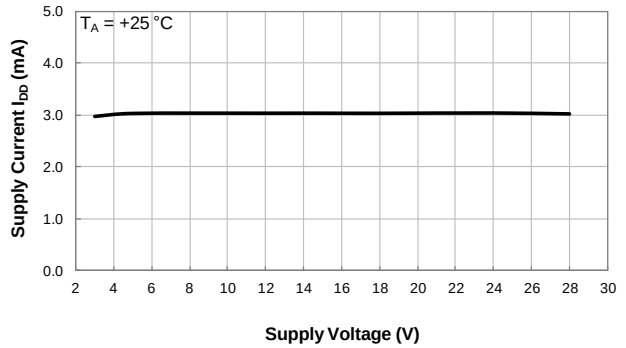

Supply Current vs Supply Voltage

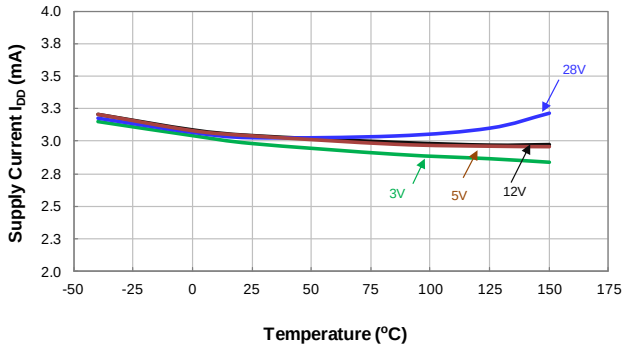

Supply Current vs Temperature

© Diodes Incorporated

Typical Operating Characteristics (Cont.)

Reverse Supply Current

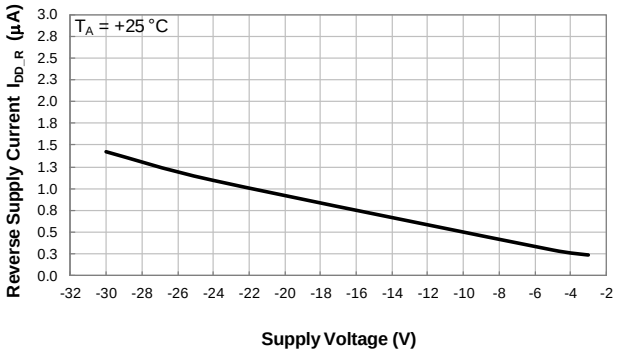

Reverse Supply Current vs Supply Voltage

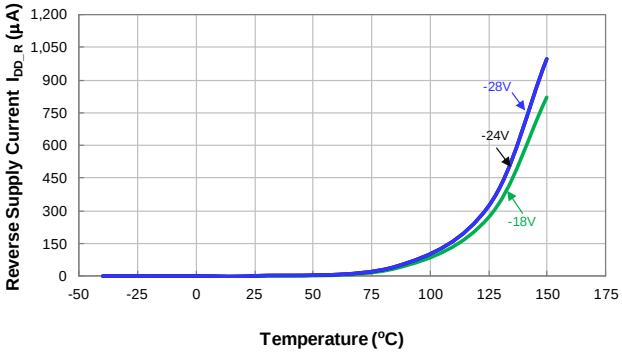

Reverse Supply Current vs Temperature

Output Switch On Voltage

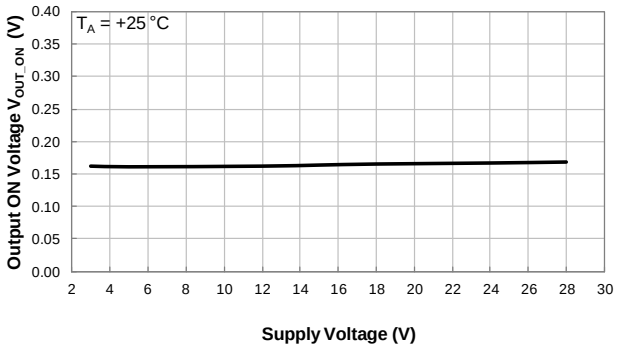

Output ON Voltage vs Supply Voltage

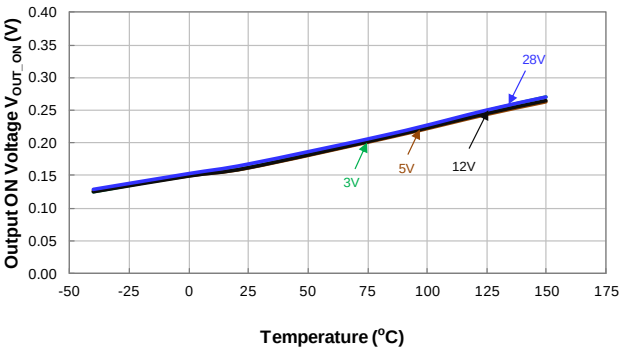

Output ON Voltage vs Temperature

Output Switch Leakage Current

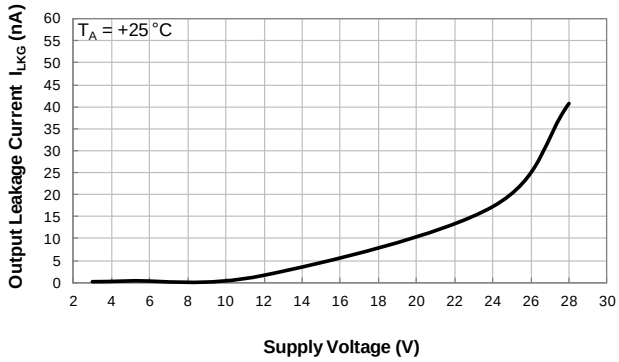

Output Leakage Current vs Supply Voltage

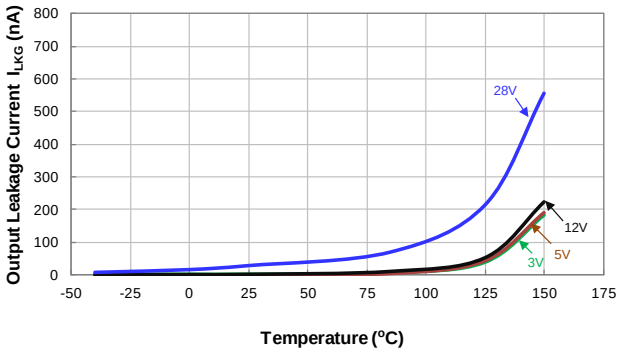

Output Leakage Current vs Temperature

© Diodes Incorporated

Typical Operating Characteristics (Cont.)

Output Current Limit

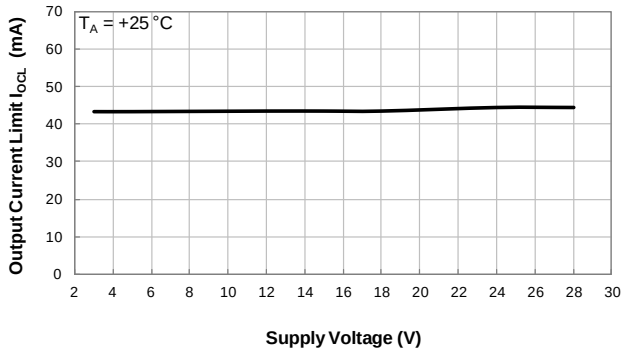

Output Current Limit vs Supply Voltage

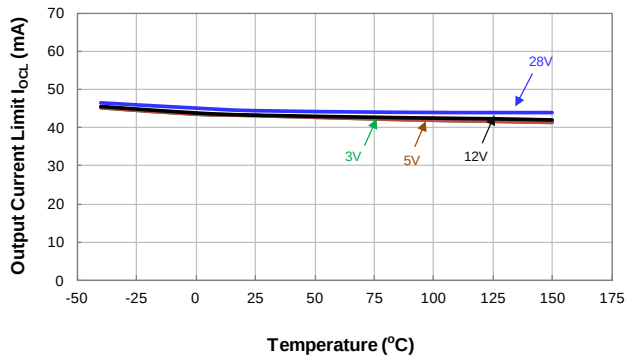

Output Current Limit vs Temperature

© Diodes Incorporated

Thermal Performance Characteristics

(1) Package Type: SC59 and SOT23

T_A (°C)	25	50	60	70	80	85	90	100	105	110	120	125	130	140	150
P_D (mW)	230	184	166	147	129	120	110	92	83	74	55	46	37	18	0

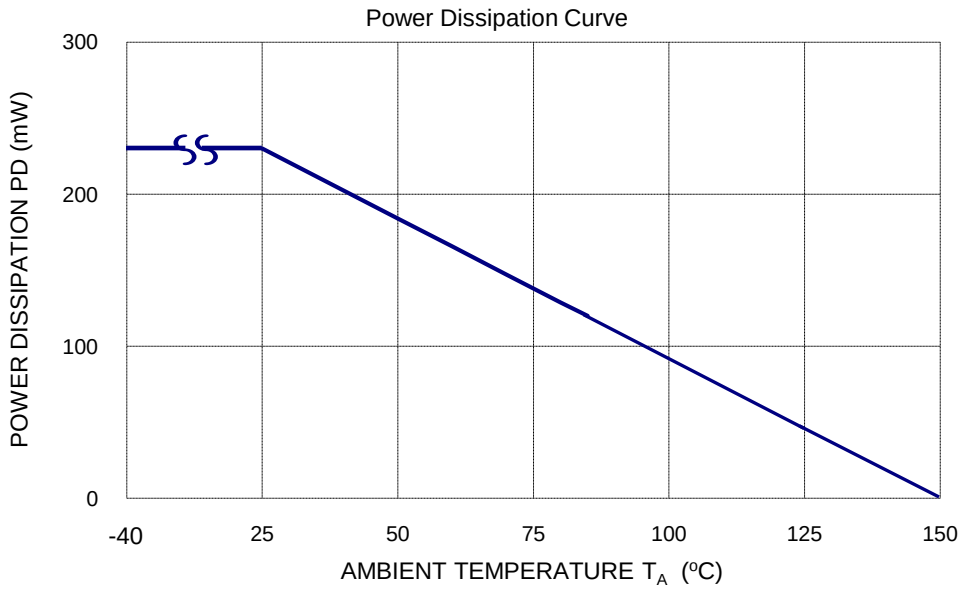

(2) Package Type: SIP-3 (Ammo Pack), SIP-3 (Bulk Pack)

T_A (°C)	25	50	60	70	80	85	90	100	105	110	120	125	130	140	150
P_D (mW)	550	440	396	362	308	286	264	220	198	176	132	110	88	44	0

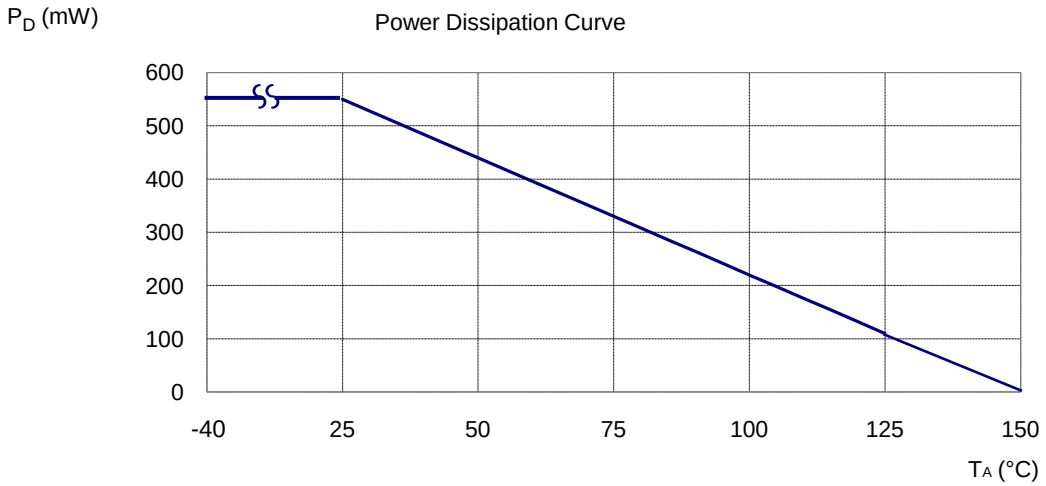

© Diodes Incorporated

Ordering Information

AH3762Q - XXX - X

Package	Packing
P : SIP-3 SA : SOT23 W : SC59	7 : Tape and Reel A: Ammo Box (Note 15) B: Bulk (Note 16)

Part Number	Package Code	Packaging	Bulk		7" Tape and Reel		Ammo Box	
			Quantity	Part Number Suffix	Quantity	Part Number Suffix	Quantity	Part Number Suffix
AH3762Q-P-A	P	SIP-3 (Ammo Pack), SIP-3 (Bulk Pack)	NA	NA	NA	NA	4,000/Box	-A
AH3762Q-P-B	P	SIP-3 (Ammo Pack), SIP-3 (Bulk Pack)	1,000	-B	NA	NA	NA	NA
AH3762Q-SA-7	SA	SOT23	NA	NA	3,000/Tape & Reel	-7	NA	NA
AH3762Q-W-7	W	SC59	NA	NA	3,000/Tape & Reel	-7	NA	NA

Notes: 15. Ammo Box is for SIP-3 Spread Lead.
16. Bulk is for SIP-3 Straight Lead.

Marking Information

(1) Package Type: SC59 and SOT23

(Top View)

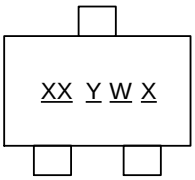

XX : Identification code
Y : Year 0 to 9
W : Week : A to Z : 1 to 26 week;
a to z : 27 to 52 week; z represents 52 and 53 week
X : Internal code

Part Number	Package	Identification Code
AH3762Q	SC59	YK
AH3762Q	SOT23	WK

(2) Package Type: SIP-3 (Ammo Pack), SIP-3 (Bulk Pack)

(Top View)

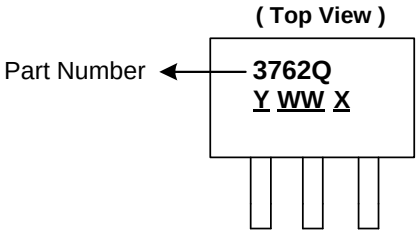

Y : Year : 0~9
WW : Week : 01~52, "52" represents 52 and 53 week
X : Internal Code

Part Number	Package	Identification Code
AH3762Q	SIP-3 (Ammo Pack), SIP-3 (Bulk Pack)	3762Q

© Diodes Incorporated

Package Outline Dimensions (All dimensions in mm.)

Please see http://www.diodes.com/package-outlines.html for the latest version.

(1) Package Type: SC59

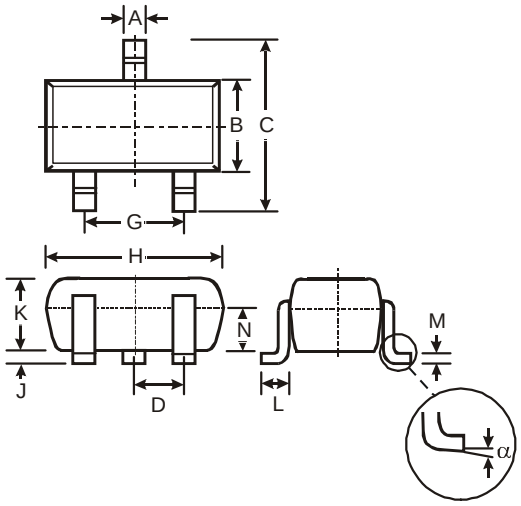

SC59			
Dim	**Min**	**Max**	**Typ**
A	0.35	0.50	0.38
B	1.50	1.70	1.60
C	2.70	3.00	2.80
D	-	-	0.95
G	-	-	1.90
H	2.90	3.10	3.00
J	0.013	0.10	0.05
K	1.00	1.30	1.10
L	0.35	0.55	0.40
M	0.10	0.20	0.15
N	0.70	0.80	0.75
α	0°	8°	-
All Dimensions in mm			

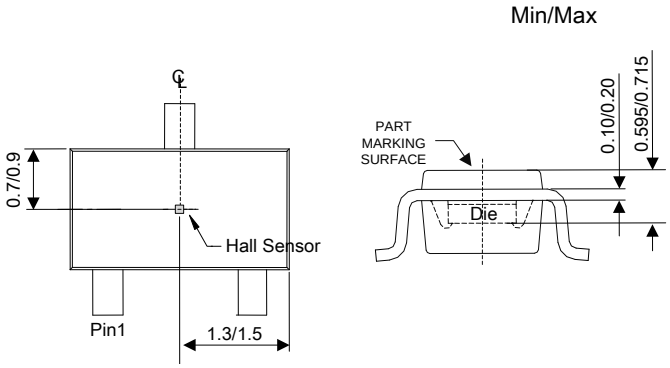

Sensor Location

© Diodes Incorporated

Package Outline Dimensions (Cont.) (All dimensions in mm.)

Please see http://www.diodes.com/package-outlines.html for the latest version.

(2) Package Type: SOT23

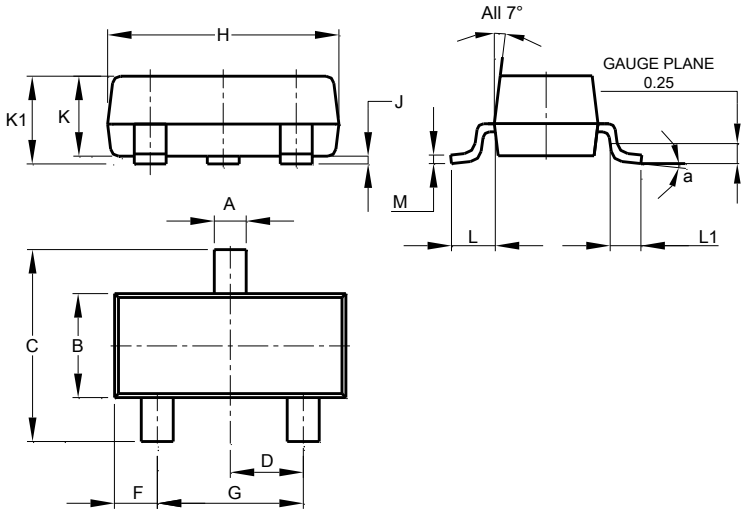

SOT23			
Dim	**Min**	**Max**	**Typ**
A	0.37	0.51	0.40
B	1.20	1.40	1.30
C	2.30	2.50	2.40
D	0.89	1.03	0.915
F	0.45	0.60	0.535
G	1.78	2.05	1.83
H	2.80	3.00	2.90
J	0.013	0.10	0.05
K	0.890	1.00	0.975
K1	0.903	1.10	1.025
L	0.45	0.61	0.55
L1	0.25	0.55	0.40
M	0.085	0.150	0.110
a	0°	8°	--
All Dimensions in mm			

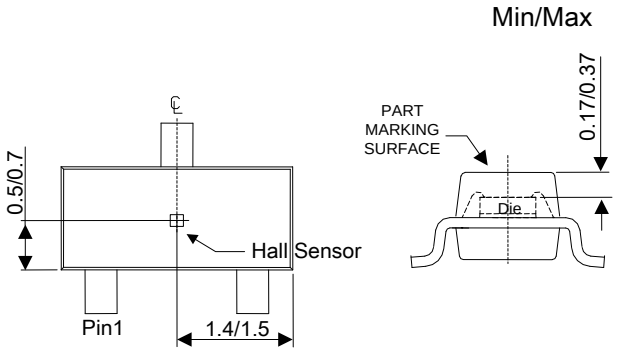

Sensor Location

© Diodes Incorporated

Package Outline Dimensions (Cont.) (All dimensions in mm.)

Please see http://www.diodes.com/package-outlines.html for the latest version.

(3) Package Type: SIP-3 (Bulk Pack)

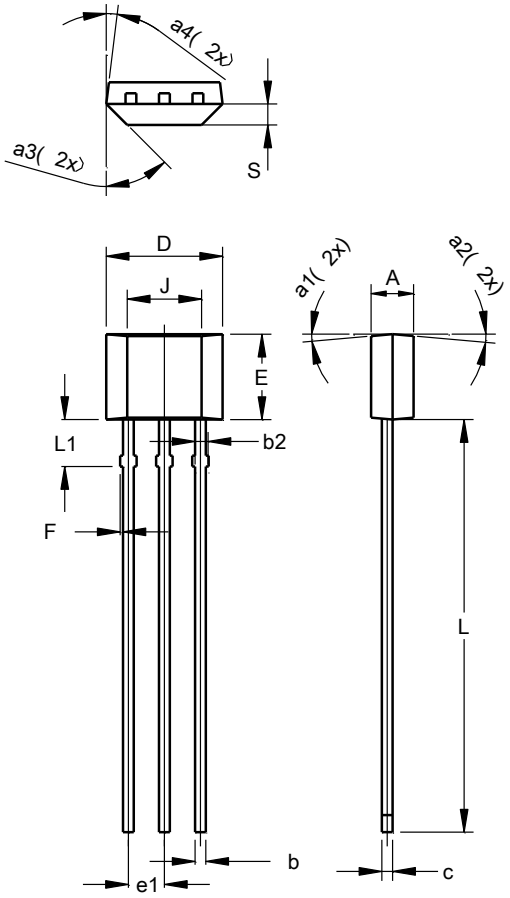

SIP-3 (Bulk Pack)			
Dim	**Min**	**Max**	**Typ**
A	1.40	1.60	1.50
b	0.33	0.43	0.38
b2	0.40	0.508	0.46
c	0.35	0.41	0.38
D	3.90	4.30	4.10
E	2.80	3.20	3.00
e1	1.24	1.30	1.27
F	0.00	0.20	—
J	2.62 REF		
L	14.00	15.00	14.50
L1	1.55	1.75	1.65
S	0.63	0.84	0.74
a1	—	—	5°
a2	—	—	5°
a3	—	—	45°
a4	—	—	3°
All Dimensions in mm			

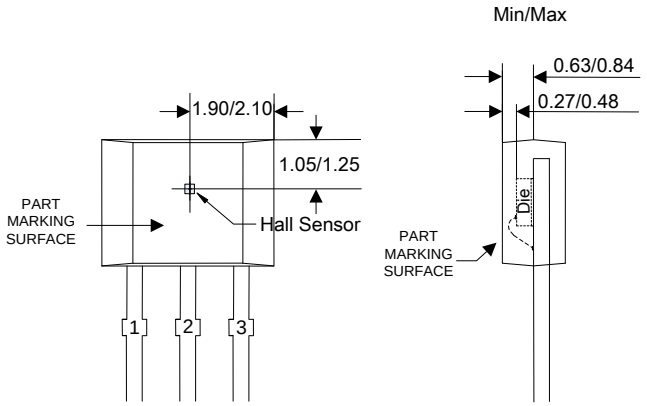

Sensor Location

© Diodes Incorporated

Package Outline Dimensions (Cont.) (All dimensions in mm.)

Please see http://www.diodes.com/package-outlines.html for the latest version.

(4) Package Type: SIP-3 (Ammo Pack)

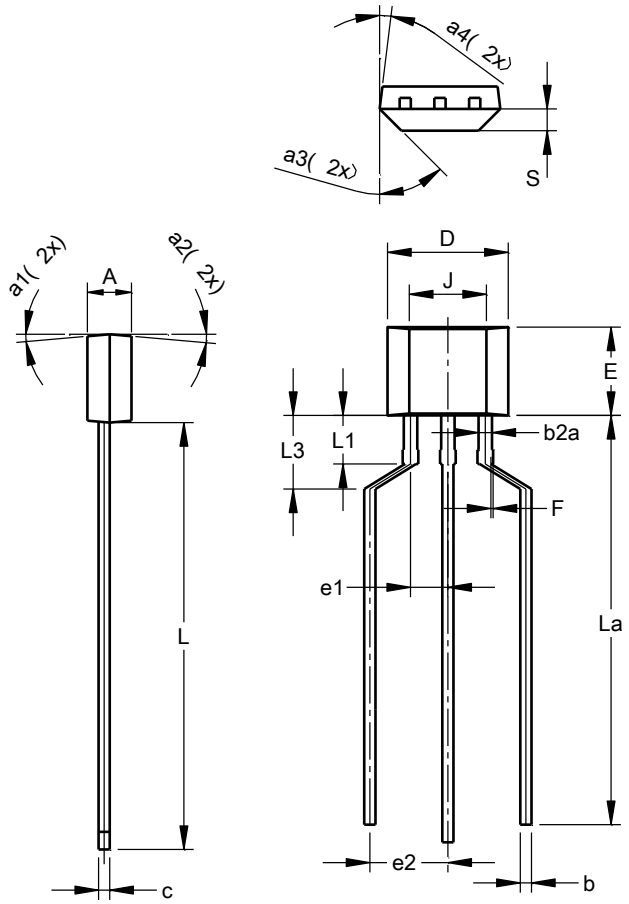

SIP-3 (Ammo Pack)			
Dim	**Min**	**Max**	**Typ**
A	1.40	1.60	1.50
b	0.33	0.43	0.38
b2a	0.40	0.52	0.46
c	0.35	0.41	0.38
D	3.90	4.30	4.10
E	2.80	3.20	3.00
e1	1.24	1.30	1.27
e2	2.40	2.90	2.65
F	0.00	0.20	—
J	2.62 REF		
L	14.00	15.00	14.50
La	12.90	14.90	13.90
L1	1.55	1.75	1.65
L3	2.00	3.00	2.50
S	0.63	0.84	0.74
a1	—	—	5°
a2	—	—	5°
a3	—	—	45°
a4	—	—	3°
All Dimensions in mm			

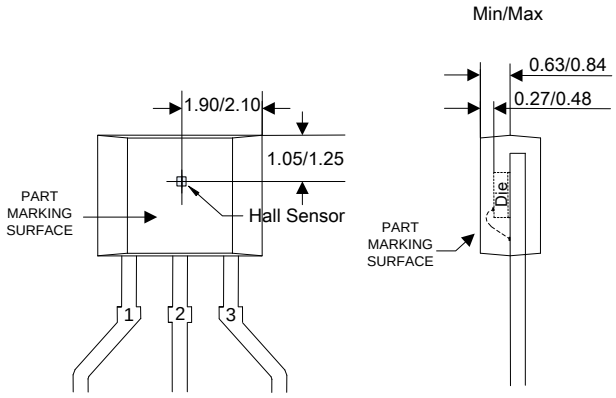

Sensor Location

© Diodes Incorporated

Suggested Pad Layout

Please see http://www.diodes.com/package-outlines.html for the latest version.

(1) Package Type: SC59

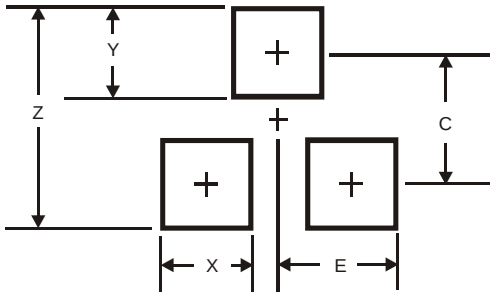

Dimensions	Value (in mm)
Z	3.4
X	0.8
Y	1.0
C	2.4
E	1.35

(2) Package Type: SOT23

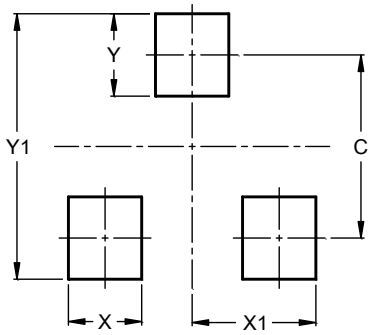

Dimensions	Value (in mm)
C	2.0
X	0.8
X1	1.35
Y	0.9
Y1	2.9

© Diodes Incorporated

IMPORTANT NOTICE

DIODES INCORPORATED MAKES NO WARRANTY OF ANY KIND, EXPRESS OR IMPLIED, WITH REGARDS TO THIS DOCUMENT, INCLUDING, BUT NOT LIMITED TO, THE IMPLIED WARRANTIES OF MERCHANTABILITY AND FITNESS FOR A PARTICULAR PURPOSE (AND THEIR EQUIVALENTS UNDER THE LAWS OF ANY JURISDICTION).

Diodes Incorporated and its subsidiaries reserve the right to make modifications, enhancements, improvements, corrections or other changes without further notice to this document and any product described herein. Diodes Incorporated does not assume any liability arising out of the application or use of this document or any product described herein; neither does Diodes Incorporated convey any license under its patent or trademark rights, nor the rights of others. Any Customer or user of this document or products described herein in such applications shall assume all risks of such use and will agree to hold Diodes Incorporated and all the companies whose products are represented on Diodes Incorporated website, harmless against all damages.

Diodes Incorporated does not warrant or accept any liability whatsoever in respect of any products purchased through unauthorized sales channel. Should Customers purchase or use Diodes Incorporated products for any unintended or unauthorized application, Customers shall indemnify and hold Diodes Incorporated and its representatives harmless against all claims, damages, expenses, and attorney fees arising out of, directly or indirectly, any claim of personal injury or death associated with such unintended or unauthorized application.

Products described herein may be covered by one or more United States, international or foreign patents pending. Product names and markings noted herein may also be covered by one or more United States, international or foreign trademarks.

This document is written in English but may be translated into multiple languages for reference. Only the English version of this document is the final and determinative format released by Diodes Incorporated.

LIFE SUPPORT

Diodes Incorporated products are specifically not authorized for use as critical components in life support devices or systems without the express written approval of the Chief Executive Officer of Diodes Incorporated. As used herein:

A. Life support devices or systems are devices or systems which:

1. are intended to implant into the body, or
2. support or sustain life and whose failure to perform when properly used in accordance with instructions for use provided in the labeling can be reasonably expected to result in significant injury to the user.

B. A critical component is any component in a life support device or system whose failure to perform can be reasonably expected to cause the failure of the life support device or to affect its safety or effectiveness.

Customers represent that they have all necessary expertise in the safety and regulatory ramifications of their life support devices or systems, and acknowledge and agree that they are solely responsible for all legal, regulatory and safety-related requirements concerning their products and any use of Diodes Incorporated products in such safety-critical, life support devices or systems, notwithstanding any devices- or systems-related information or support that may be provided by Diodes Incorporated. Further, Customers must fully indemnify Diodes Incorporated and its representatives against any damages arising out of the use of Diodes Incorporated products in such safety-critical, life support devices or systems.

Copyright © 2018, Diodes Incorporated

www.diodes.com

Компания «ЭлектроПласт» предлагает заключение долгосрочных отношений при поставках импортных электронных компонентов на взаимовыгодных условиях!

Наши преимущества:

- Оперативные поставки широкого спектра электронных компонентов отечественного и импортного производства напрямую от производителей и с крупнейших мировых складов;
- Поставка более 17-ти миллионов наименований электронных компонентов;
- Поставка сложных, дефицитных, либо снятых с производства позиций;
- Оперативные сроки поставки под заказ (от 5 рабочих дней);
- Экспресс доставка в любую точку России;
- Техническая поддержка проекта, помощь в подборе аналогов, поставка прототипов;
- Система менеджмента качества сертифицирована по Международному стандарту ISO 9001;
- Лицензия ФСБ на осуществление работ с использованием сведений, составляющих государственную тайну;
- Поставка специализированных компонентов (Xilinx, Altera, Analog Devices, Intersil, Interpoint, Microsemi, Aeroflex, Peregrine, Syfer, Eurofarad, Texas Instrument, Miteq, Cobham, E2V, MA-COM, Hittite, Mini-Circuits,General Dynamics и др.);

Помимо этого, одним из направлений компании «ЭлектроПласт» является направление «Источники питания». Мы предлагаем Вам помощь Конструкторского отдела:

- Подбор оптимального решения, техническое обоснование при выборе компонента;
- Подбор аналогов;
- Консультации по применению компонента;
- Поставка образцов и прототипов;
- Техническая поддержка проекта;
- Защита от снятия компонента с производства.

Как с нами связаться

Телефон: 8 (812) 309 58 32 (многоканальный)
Факс: 8 (812) 320-02-42
Электронная почта: org@eplast1.ru
Адрес: 198099, г. Санкт-Петербург, ул. Калинина, дом 2, корпус 4, литера А.