DS34C86T Quad CMOS Differential Line Receiver

Check for Samples: DS34C86T

FEATURES

- **CMOS Design for Low Power**
- **±0.2V Sensitivity Over the Input Common Mode Voltage Range**
- **Typical Propagation Delays: 19 ns**
- **Typical Input Hysteresis: 60 mV**
- **Inputs Won't Load Line when V_{CC} = 0V**
- **Meets the Requirements of EIA Standard RS-422**
- **TRI-STATE Outputs for System Bus Compatibility**
- **Available in Surface Mount**
- **Open Input Failsafe Feature, Output High for Open Input**

DESCRIPTION

The DS34C86T is a quad differential line receiver designed to meet the RS-422, RS-423, and Federal Standards 1020 and 1030 for balanced and unbalanced digital data transmission, while retaining the low power characteristics of CMOS.

The DS34C86T has an input sensitivity of 200 mV over the common mode input voltage range of ±7V. Hysteresis is provided to improve noise margin and discourage output instability for slowly changing input waveforms.

The DS34C86T features internal pull-up and pull-down resistors which prevent output oscillation on unused channels.

Separate enable pins allow independent control of receiver pairs. The TRI-STATE outputs have 6 mA source and sink capability. The DS34C86T is pin compatible with the DS3486.

Logic Diagram

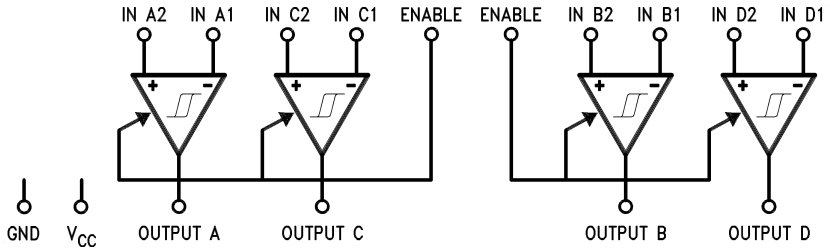

Please be aware that an important notice concerning availability, standard warranty, and use in critical applications of Texas Instruments semiconductor products and disclaimers thereto appears at the end of this data sheet.

All trademarks are the property of their respective owners.

PRODUCTION DATA information is current as of publication date. Products conform to specifications per the terms of the Texas Instruments standard warranty. Production processing does not necessarily include testing of all parameters.

Copyright © 2004, Texas Instruments Incorporated

Connection Diagram

Top View

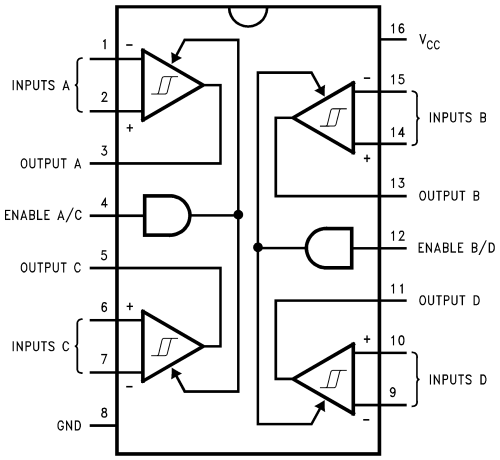

Figure 1. PDIP Package
See Package Numbers D0016A or NFG0016E

Truth Table (1)

Enable	Input	Output
L	X	Z
H	$V_{ID} \geq V_{TH}$ (Max)	H
H	$V_{ID} \leq V_{TH}$ (Min)	L
H	Open*	H

(1) Open, not terminated. Z = TRI-STATE

These devices have limited built-in ESD protection. The leads should be shorted together or the device placed in conductive foam during storage or handling to prevent electrostatic damage to the MOS gates.

Absolute Maximum Ratings(1)(2)(3)(4)

Supply Voltage (V_{CC})	7V
Input Common Mode Range (V_{CM})	±14V
Differential Input Voltage (V_{DIFF})	±14V
Enable Input Voltage (V_{IN})	7V
Storage Temperature Range (T_{STG})	−65°C to +150°C
Lead Temperature (Soldering 4 sec)	260°C
Maximum Power Dissipation at 25°C (5)	
PDIP Package	1645 mW
SOIC Package	1190 mW
Current Per Output	±25 mA
This device does not meet 2000V ESD rating(1)	

(1) ESD Rating; HBM (1.5kΩ, 100 pF) Inputs ≥ 2000V All other pins ≥ 1000V EIAJ (0Ω, 200 pF) ≥ 350V
(2) Unless otherwise specified, all voltages are referenced to ground.
(3) Absolute Maximum Ratings are values beyond which the safety of the device cannot be guaranteed. They are not meant to imply that the device should be operated at these limits. The “Electrical Characteristics” provide conditions for actual device operation.
(4) If Military/Aerospace specified devices are required, please contact the TI Sales Office/Distributors for availability and specifications.
(5) Ratings apply to ambient temperature at 25°C. Above this temperature derate NFG0016E Package 13.16 mW/°C, and D0016A Package 9.52 mW/°C.

Copyright © 2004, Texas Instruments Incorporated

Operating Conditions

	Min	Max	Unit
Supply Voltage (V_{CC})	4.50	5.50	V
Operating Temperature Range (T_A)	−40	+85	°C
Enable Input Rise or Fall Times		500	ns

DC Electrical Characteristics (1)

V_{CC} = 5V ±10% (unless otherwise specified)

Parameter		Test Conditions	Min	Typ	Max	Units
V_{TH}	Minimum Differential Input Voltage	$V_{OUT} = V_{OH}$ or V_{OL} −7V < V_{CM}< +7V	−200	35	+200	mV
R_{IN}	Input Resistance	V_{IN} = −7V, +7V (Other Input = GND)	5.0	6.8	10	kΩ
I_{IN}	Input Current (Under Test)	V_{IN} = +10V, Other Input = GND		+1.1	+1.5	mA
		V_{IN} = −10V, Other Input = GND		−2.0	−2.5	mA
V_{OH}	Minimum High Level Output Voltage	V_{CC} = Min., $V_{(DIFF)}$ = +1V I_{OUT} = −6.0 mA	3.8	4.2		V
V_{OL}	Maximum Low Level Output Voltage	V_{CC} = Max., $V_{(DIFF)}$ = −1V I_{OUT} = 6.0 mA		0.2	0.3	V
V_{IH}	Minimum Enable High Input Level Voltage		2.0			V
V_{IL}	Maximum Enable Low Input Level Voltage				0.8	V
I_{OZ}	Maximum TRI-STATE Output Leakage Current	$V_{OUT} = V_{CC}$ or GND, TRI-STATE Control = V_{IL}		±0.5	±5.0	µA
I_I	Maximum Enable Input Current	$V_{IN} = V_{CC}$ or GND			±1.0	µA
I_{CC}	Quiescent Power Supply Current	V_{CC} = Max., $V_{(DIFF)}$ = +1V		16	23	mA
V_{HYST}	Input Hysteresis	V_{CM} = 0V		60		mV

(1) Unless otherwise specified, Min/Max limits apply across the operating temperature range. All typicals are given for V_{CC} = 5V and T_A = 25°C.

AC Electrical Characteristics (1)

V_{CC} = 5V ±10% (unless otherwise specified) (Figure 2, Figure 3, Figure 4)

Parameter		Test Conditions	Min	Typ	Max	Units
t_{PLH}, t_{PHL}	Propagation Delay Input to Output	C_L = 50 pF V_{DIFF} = 2.5V V_{CM} = 0V		19	30	ns
t_{RISE}, t_{FALL}	Output Rise and Fall Times	C_L = 50 pF V_{DIFF} = 2.5V V_{CM} = 0V		4	9	ns
t_{PLZ}, t_{PHZ}	Propagation Delay ENABLE to Output	C_L = 50 pF R_L = 1000Ω V_{DIFF} = 2.5V		13	18	ns
t_{PZL}, t_{PZH}	Propagation Delay ENABLE to Output	C_L = 50 pF R_L = 1000Ω V_{DIFF} = 2.5V		13	21	ns

(1) Unless otherwise specified, Min/Max limits apply across the operating temperature range. All typicals are given for V_{CC} = 5V and T_A = 25°C.

Copyright © 2004, Texas Instruments Incorporated

Comparison Table of Switching Characteristics into "LS-Type" Load [1]

V_{CC} = 5V, T_A = 25°C (Figure 5, Figure 6)

Parameter		DS34C86		DS3486		Units
		Typ	Max	Typ	Max	
$t_{PHL(D)}$	Propagation Delay Time Output High to Low	17		19		ns
$t_{PLH(D)}$	Propagation Delay Time Output Low to High	19		19		ns
t_{PLZ}	Output Low to TRI-STATE	13		23		ns
t_{PHZ}	Output High to TRI-STATE	12		25		ns
t_{PZH}	Output TRI-STATE to High	13		18		ns
t_{PZL}	Output TRI-STATE to Low	13		20		ns

(1) This table is provided for comparison purposes only. The values in this table for the DS34C86 reflect the performance of the device but are not tested or guaranteed.

TEST AND SWITCHING WAVEFORMS

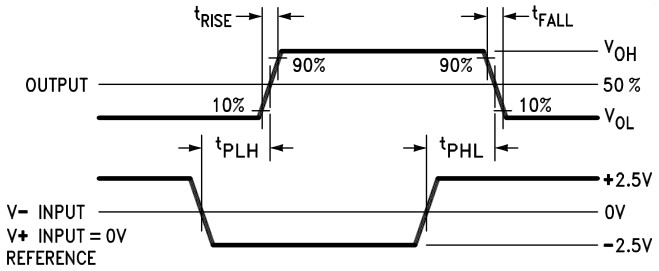

Figure 2. Propagation Delays

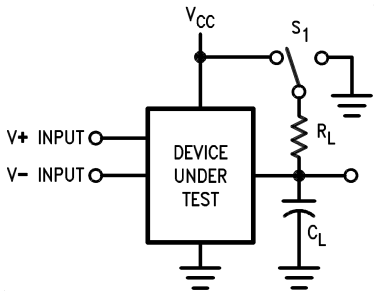

C_L Includes load and test jig capacitance.
S1 = V_{CC} for t_{PZL}, and t_{PLZ} measurements.
S1 = GND for t_{PZH}, and t_{PHZ} measurements.

Figure 3. Test Circuit for TRI-STATE Output Tests

Copyright © 2004, Texas Instruments Incorporated

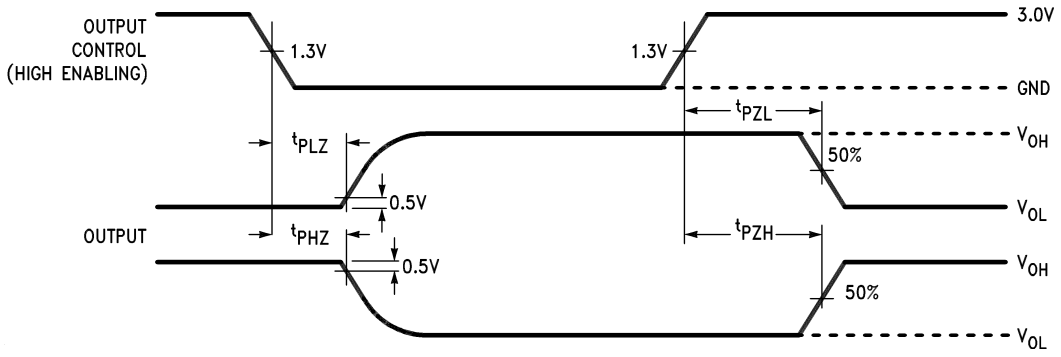

Figure 4. TRI-STATE Output Enable and Disable Waveforms

AC Test Circuits and Switching Time Waveforms

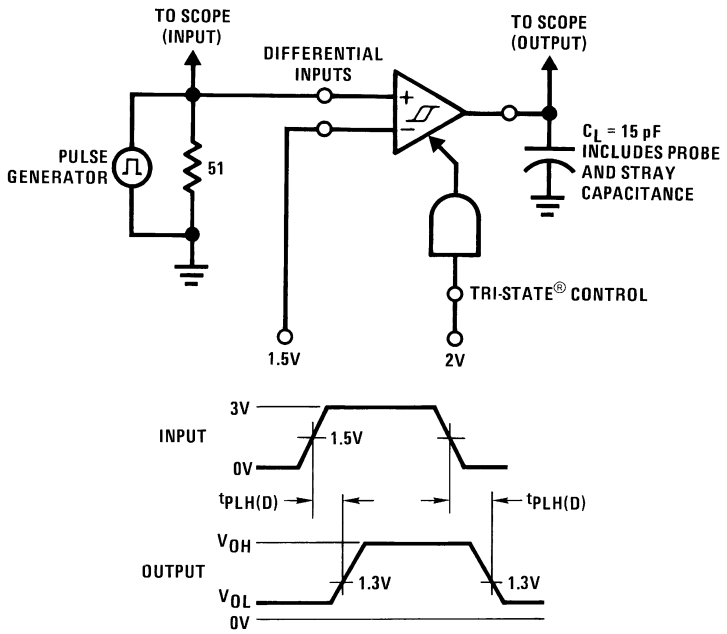

Input Pulse Characteristics:
$t_{TLH} = t_{THL} = 6$ ns (10% to 90%)
PRR = 1 MHz, 50% duty cycle

Figure 5. Propagation Delay Differential Input to Output for "LS-Type" Load

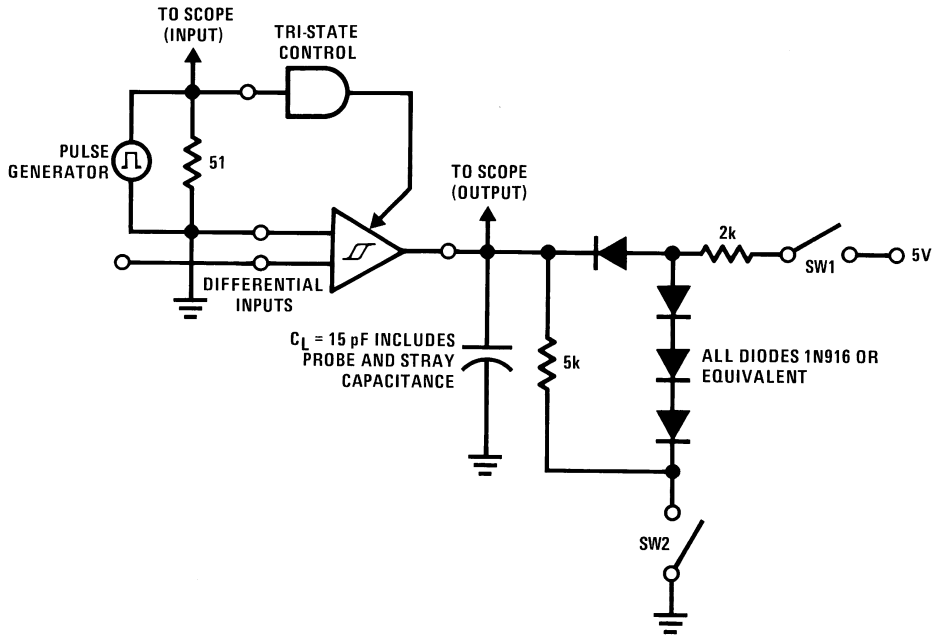

1.5V for t_{PHZ} and t_{PLZ}
−1.5V for t_{PLZ} and t_{PZL}
Input Pulse Characteristics:
$t_{TLH} = t_{THL}$ = 6 ns (10% to 90%)
PRR = 1 MHz, 50% duty cycle

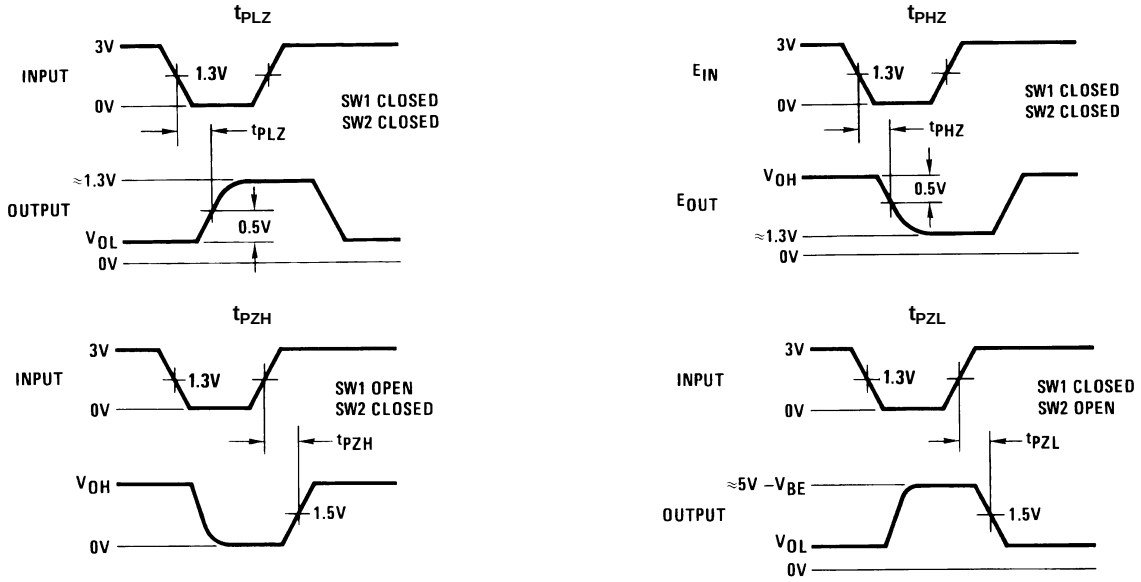

Figure 6. Propagation Delay TRI-STATE Control Unit to Output for "LS-Type" Load

Copyright © 2004, Texas Instruments Incorporated

PACKAGING INFORMATION

Orderable Device	Status (1)	Package Type	Package Drawing	Pins	Package Qty	Eco Plan (2)	Lead/Ball Finish	MSL Peak Temp (3)	Op Temp (°C)	Top-Side Markings (4)	Samples
DS34C86TM	ACTIVE	SOIC	D	16	48	TBD	Call TI	Call TI	-40 to 85	DS34C86TM	Samples
DS34C86TM/NOPB	ACTIVE	SOIC	D	16	48	Green (RoHS & no Sb/Br)	CU SN	Level-1-260C-UNLIM	-40 to 85	DS34C86TM	Samples
DS34C86TMX	ACTIVE	SOIC	D	16	2500	TBD	Call TI	Call TI	-40 to 85	DS34C86TM	Samples
DS34C86TMX/NOPB	ACTIVE	SOIC	D	16	2500	Green (RoHS & no Sb/Br)	CU SN	Level-1-260C-UNLIM	-40 to 85	DS34C86TM	Samples

(1) The marketing status values are defined as follows:
ACTIVE: Product device recommended for new designs.
LIFEBUY: TI has announced that the device will be discontinued, and a lifetime-buy period is in effect.
NRND: Not recommended for new designs. Device is in production to support existing customers, but TI does not recommend using this part in a new design.
PREVIEW: Device has been announced but is not in production. Samples may or may not be available.
OBSOLETE: TI has discontinued the production of the device.

(2) Eco Plan - The planned eco-friendly classification: Pb-Free (RoHS), Pb-Free (RoHS Exempt), or Green (RoHS & no Sb/Br) - please check http://www.ti.com/productcontent for the latest availability information and additional product content details.
TBD: The Pb-Free/Green conversion plan has not been defined.
Pb-Free (RoHS): TI's terms "Lead-Free" or "Pb-Free" mean semiconductor products that are compatible with the current RoHS requirements for all 6 substances, including the requirement that lead not exceed 0.1% by weight in homogeneous materials. Where designed to be soldered at high temperatures, TI Pb-Free products are suitable for use in specified lead-free processes.
Pb-Free (RoHS Exempt): This component has a RoHS exemption for either 1) lead-based flip-chip solder bumps used between the die and package, or 2) lead-based die adhesive used between the die and leadframe. The component is otherwise considered Pb-Free (RoHS compatible) as defined above.
Green (RoHS & no Sb/Br): TI defines "Green" to mean Pb-Free (RoHS compatible), and free of Bromine (Br) and Antimony (Sb) based flame retardants (Br or Sb do not exceed 0.1% by weight in homogeneous material)

(3) MSL, Peak Temp. -- The Moisture Sensitivity Level rating according to the JEDEC industry standard classifications, and peak solder temperature.

(4) Only one of markings shown within the brackets will appear on the physical device.

Important Information and Disclaimer: The information provided on this page represents TI's knowledge and belief as of the date that it is provided. TI bases its knowledge and belief on information provided by third parties, and makes no representation or warranty as to the accuracy of such information. Efforts are underway to better integrate information from third parties. TI has taken and continues to take reasonable steps to provide representative and accurate information but may not have conducted destructive testing or chemical analysis on incoming materials and chemicals. TI and TI suppliers consider certain information to be proprietary, and thus CAS numbers and other limited information may not be available for release.

In no event shall TI's liability arising out of such information exceed the total purchase price of the TI part(s) at issue in this document sold by TI to Customer on an annual basis.

TAPE AND REEL INFORMATION

REEL DIMENSIONS

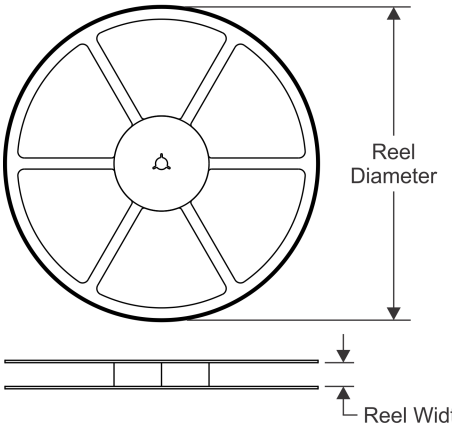

TAPE DIMENSIONS

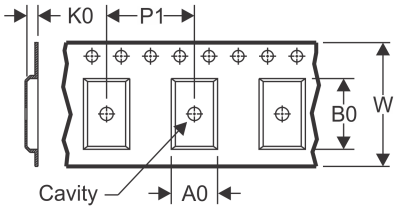

A0	Dimension designed to accommodate the component width
B0	Dimension designed to accommodate the component length
K0	Dimension designed to accommodate the component thickness
W	Overall width of the carrier tape
P1	Pitch between successive cavity centers

QUADRANT ASSIGNMENTS FOR PIN 1 ORIENTATION IN TAPE

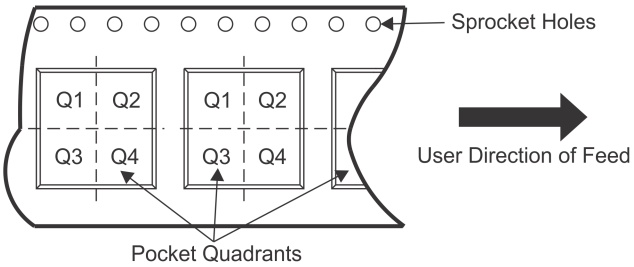

*All dimensions are nominal

Device	Package Type	Package Drawing	Pins	SPQ	Reel Diameter (mm)	Reel Width W1 (mm)	A0 (mm)	B0 (mm)	K0 (mm)	P1 (mm)	W (mm)	Pin1 Quadrant
DS34C86TMX	SOIC	D	16	2500	330.0	16.4	6.5	10.3	2.3	8.0	16.0	Q1
DS34C86TMX/NOPB	SOIC	D	16	2500	330.0	16.4	6.5	10.3	2.3	8.0	16.0	Q1

TAPE AND REEL BOX DIMENSIONS

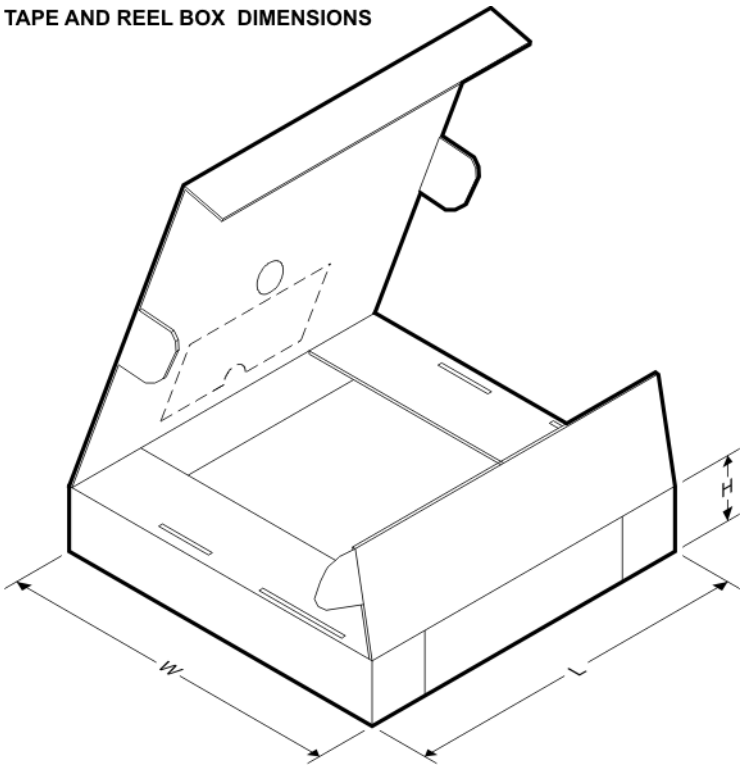

*All dimensions are nominal

Device	Package Type	Package Drawing	Pins	SPQ	Length (mm)	Width (mm)	Height (mm)
DS34C86TMX	SOIC	D	16	2500	367.0	367.0	35.0
DS34C86TMX/NOPB	SOIC	D	16	2500	367.0	367.0	35.0

D (R–PDSO–G16) PLASTIC SMALL OUTLINE

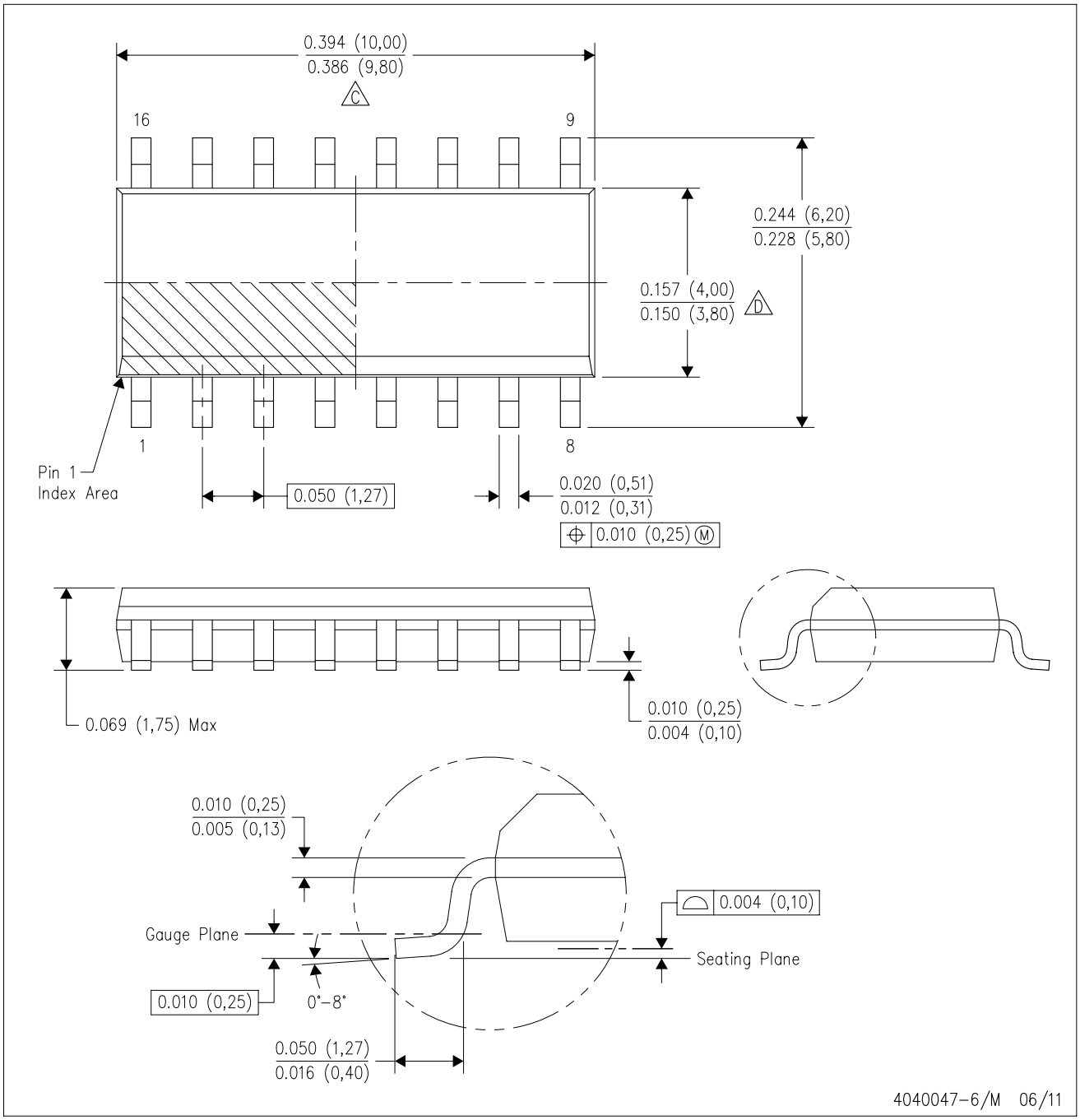

NOTES:
A. All linear dimensions are in inches (millimeters).
B. This drawing is subject to change without notice.
C. Body length does not include mold flash, protrusions, or gate burrs. Mold flash, protrusions, or gate burrs shall not exceed 0.006 (0,15) each side.
D. Body width does not include interlead flash. Interlead flash shall not exceed 0.017 (0,43) each side.
E. Reference JEDEC MS–012 variation AC.

IMPORTANT NOTICE

Texas Instruments Incorporated and its subsidiaries (TI) reserve the right to make corrections, enhancements, improvements and other changes to its semiconductor products and services per JESD46, latest issue, and to discontinue any product or service per JESD48, latest issue. Buyers should obtain the latest relevant information before placing orders and should verify that such information is current and complete. All semiconductor products (also referred to herein as “components”) are sold subject to TI’s terms and conditions of sale supplied at the time of order acknowledgment.

TI warrants performance of its components to the specifications applicable at the time of sale, in accordance with the warranty in TI’s terms and conditions of sale of semiconductor products. Testing and other quality control techniques are used to the extent TI deems necessary to support this warranty. Except where mandated by applicable law, testing of all parameters of each component is not necessarily performed.

TI assumes no liability for applications assistance or the design of Buyers’ products. Buyers are responsible for their products and applications using TI components. To minimize the risks associated with Buyers’ products and applications, Buyers should provide adequate design and operating safeguards.

TI does not warrant or represent that any license, either express or implied, is granted under any patent right, copyright, mask work right, or other intellectual property right relating to any combination, machine, or process in which TI components or services are used. Information published by TI regarding third-party products or services does not constitute a license to use such products or services or a warranty or endorsement thereof. Use of such information may require a license from a third party under the patents or other intellectual property of the third party, or a license from TI under the patents or other intellectual property of TI.

Reproduction of significant portions of TI information in TI data books or data sheets is permissible only if reproduction is without alteration and is accompanied by all associated warranties, conditions, limitations, and notices. TI is not responsible or liable for such altered documentation. Information of third parties may be subject to additional restrictions.

Resale of TI components or services with statements different from or beyond the parameters stated by TI for that component or service voids all express and any implied warranties for the associated TI component or service and is an unfair and deceptive business practice. TI is not responsible or liable for any such statements.

Buyer acknowledges and agrees that it is solely responsible for compliance with all legal, regulatory and safety-related requirements concerning its products, and any use of TI components in its applications, notwithstanding any applications-related information or support that may be provided by TI. Buyer represents and agrees that it has all the necessary expertise to create and implement safeguards which anticipate dangerous consequences of failures, monitor failures and their consequences, lessen the likelihood of failures that might cause harm and take appropriate remedial actions. Buyer will fully indemnify TI and its representatives against any damages arising out of the use of any TI components in safety-critical applications.

In some cases, TI components may be promoted specifically to facilitate safety-related applications. With such components, TI’s goal is to help enable customers to design and create their own end-product solutions that meet applicable functional safety standards and requirements. Nonetheless, such components are subject to these terms.

No TI components are authorized for use in FDA Class III (or similar life-critical medical equipment) unless authorized officers of the parties have executed a special agreement specifically governing such use.

Only those TI components which TI has specifically designated as military grade or “enhanced plastic” are designed and intended for use in military/aerospace applications or environments. Buyer acknowledges and agrees that any military or aerospace use of TI components which have ***not*** been so designated is solely at the Buyer's risk, and that Buyer is solely responsible for compliance with all legal and regulatory requirements in connection with such use.

TI has specifically designated certain components as meeting ISO/TS16949 requirements, mainly for automotive use. In any case of use of non-designated products, TI will not be responsible for any failure to meet ISO/TS16949.

Products		**Applications**	
Audio	www.ti.com/audio	Automotive and Transportation	www.ti.com/automotive
Amplifiers	amplifier.ti.com	Communications and Telecom	www.ti.com/communications
Data Converters	dataconverter.ti.com	Computers and Peripherals	www.ti.com/computers
DLP® Products	www.dlp.com	Consumer Electronics	www.ti.com/consumer-apps
DSP	dsp.ti.com	Energy and Lighting	www.ti.com/energy
Clocks and Timers	www.ti.com/clocks	Industrial	www.ti.com/industrial
Interface	interface.ti.com	Medical	www.ti.com/medical
Logic	logic.ti.com	Security	www.ti.com/security
Power Mgmt	power.ti.com	Space, Avionics and Defense	www.ti.com/space-avionics-defense
Microcontrollers	microcontroller.ti.com	Video and Imaging	www.ti.com/video
RFID	www.ti-rfid.com		
OMAP Applications Processors	www.ti.com/omap	**TI E2E Community**	e2e.ti.com
Wireless Connectivity	www.ti.com/wirelessconnectivity		

Mailing Address: Texas Instruments, Post Office Box 655303, Dallas, Texas 75265
Copyright © 2013, Texas Instruments Incorporated

Компания «ЭлектроПласт» предлагает заключение долгосрочных отношений при поставках импортных электронных компонентов на взаимовыгодных условиях!

Наши преимущества:

- Оперативные поставки широкого спектра электронных компонентов отечественного и импортного производства напрямую от производителей и с крупнейших мировых складов;
- Поставка более 17-ти миллионов наименований электронных компонентов;
- Поставка сложных, дефицитных, либо снятых с производства позиций;
- Оперативные сроки поставки под заказ (от 5 рабочих дней);
- Экспресс доставка в любую точку России;
- Техническая поддержка проекта, помощь в подборе аналогов, поставка прототипов;
- Система менеджмента качества сертифицирована по Международному стандарту ISO 9001;
- Лицензия ФСБ на осуществление работ с использованием сведений, составляющих государственную тайну;
- Поставка специализированных компонентов (Xilinx, Altera, Analog Devices, Intersil, Interpoint, Microsemi, Aeroflex, Peregrine, Syfer, Eurofarad, Texas Instrument, Miteq, Cobham, E2V, MA-COM, Hittite, Mini-Circuits,General Dynamics и др.);

Помимо этого, одним из направлений компании «ЭлектроПласт» является направление «Источники питания». Мы предлагаем Вам помощь Конструкторского отдела:

- Подбор оптимального решения, техническое обоснование при выборе компонента;
- Подбор аналогов;
- Консультации по применению компонента;
- Поставка образцов и прототипов;
- Техническая поддержка проекта;
- Защита от снятия компонента с производства.

Как с нами связаться

Телефон: 8 (812) 309 58 32 (многоканальный)
Факс: 8 (812) 320-02-42
Электронная почта: org@eplast1.ru
Адрес: 198099, г. Санкт-Петербург, ул. Калинина, дом 2, корпус 4, литера А.