FHX13LG, FHX14LG

Super Low Noise HEMT

FEATURES

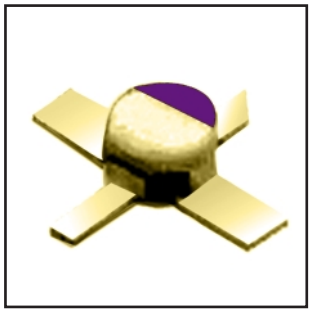

- Low Noise Figure: 0.45dB (Typ.)@f=12GHz (FHX13)
- High Associated Gain: 13.0dB (Typ.)@f=12GHz
- Lg ≤ 0.15µm, Wg = 200µm
- Gold Gate Metallization for High Reliability
- Cost Effective Ceramic Microstrip (SMT) Package
- Tape and Reel Packaging Available

DESCRIPTION

The FHX13LG, FHX14LG is a Super High Electron Mobility Transistor(SuperHEMT™) intended for general purpose, ultra-low noise and high gain amplifiers in the 2-18GHz frequency range. The devices are packaged in cost effective, low parasitic, hermetically sealed metal-ceramic package for high volume telecommunication, TVRO, VSAT or other low noise applications.

Fujitsu's stringent Quality Assurance Program assures the highest reliability and consistent performance.

ABSOLUTE MAXIMUM RATING (Ambient Temperature Ta=25°C)

Item	Symbol	Rating	Unit
Drain-Source Voltage	V_{DS}	3.5	V
Gate-Source Voltage	V_{GS}	-3.0	V
Total Power Dissipation	P_{t*}	180	mW
Storage Temperature	T_{stg}	-65 to +175	°C
Channel Temperature	T_{ch}	175	°C

***Note:** Mounted on Al_2O_3 board (30 x 30 x 0.65mm)

Fujitsu recommends the following conditions for the reliable operation of GaAs FETs:

1. The drain-source operating voltage (V_{DS}) should not exceed 2 volts.
2. The forward and reverse gate currents should not exceed 0.2 and -0.05 mA respectively with gate resistance of 4000Ω.
3. The operating channel temperature (T_{ch}) should not exceed 80°C.

ELECTRICAL CHARACTERISTICS (Ambient Temperature Ta=25°C)

Item		Symbol	Condition	Limit			Unit
				Min.	Typ.	Max.	
Saturated Drain Current		I_{DSS}	V_{DS} = 2V, V_{GS} =0V	10	30	60	mA
Transconductance		g_m	V_{DS} = 2V, I_{DS} =10mA	35	50	-	mS
Pinch-off Voltage		V_p	V_{DS} = 2V, I_{DS} =1mA	-0.1	-0.7	-1.5	V
Gate Source Breakdown Voltage		V_{GSO}	I_{GS} = -10µA	-3.0	-	-	V
Noise Figure	FHX13LG	NF	V_{DS} = 2V, I_{DS} = 10mA, f = 12GHz	-	0.45	0.50	dB
Associated Gain	FHX13LG	G_{as}		11.0	13.0	-	dB
Noise Figure	FHX14LG	NF		-	0.55	0.60	dB
Associated Gain	FHX14LG	G_{as}		11.0	13.0	-	dB
Thermal Resistance		R_{th}	Channel to Case	-	300	400	°C/W

AVAILABLE CASE STYLES: LG

Note: RF parameters for LG devices are measured on a sample basis as follows:

Lot qty.			Sample qty.	Accept/Reject
1200	or	less	125	(0,1)
1201	to	3200	200	(0,1)
3201	to	10000	315	(1,2)
10001	or	over	500	(1,2)

Edition 1.1
July 1999

FUJITSU

POWER DERATING CURVE

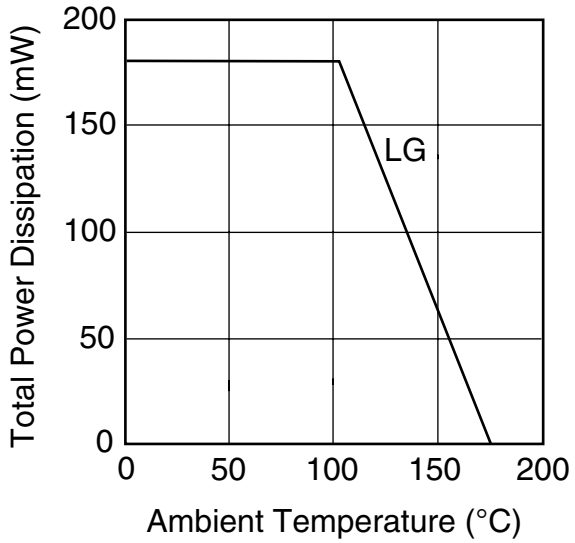

DRAIN CURRENT vs. DRAIN-SOURCE VOLTAGE

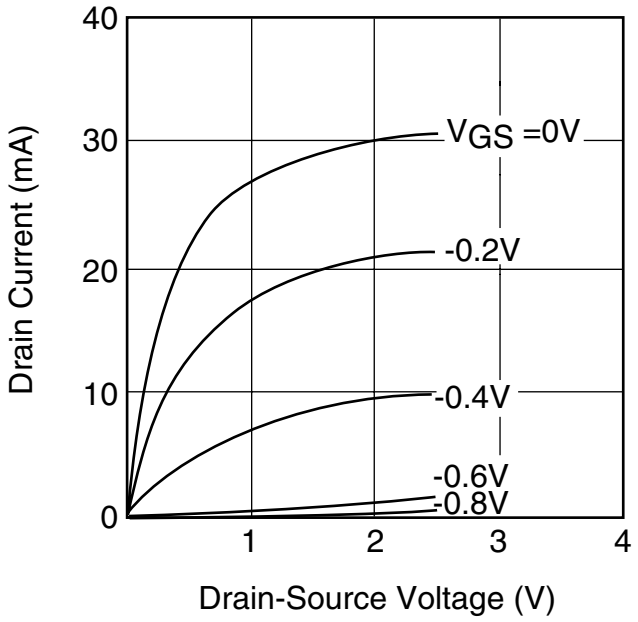

NF & Gas vs. FREQUENCY
FHX13LG

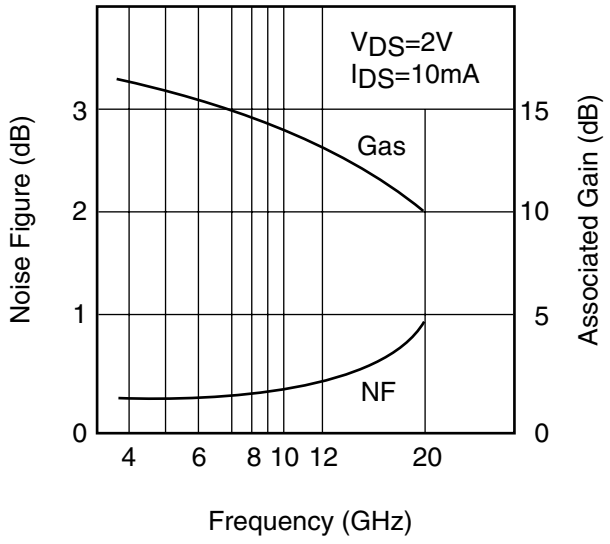

NF & Gas vs. I_{DS}
FHX13LG

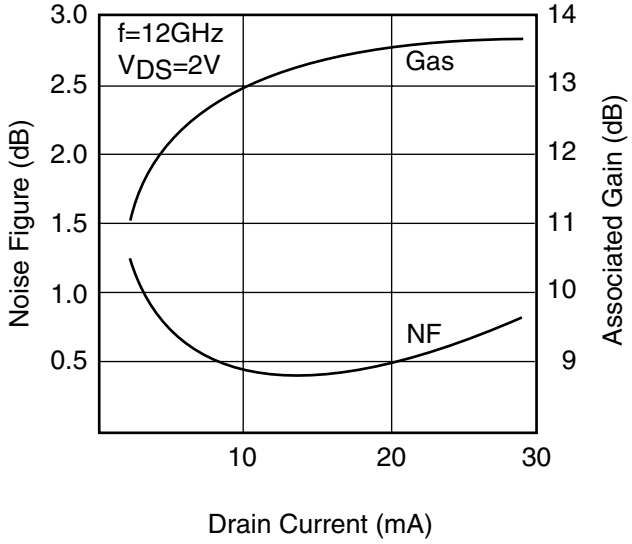

NF & Gas vs. TEMPERATURE
FHX13LG

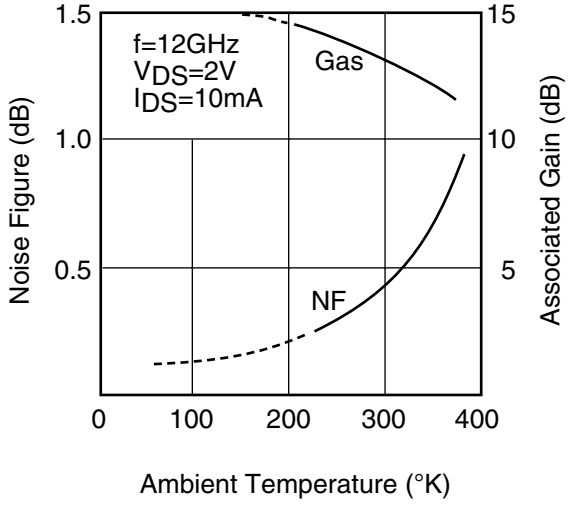

OUTPUT POWER vs. INPUT POWER
FHX13LG

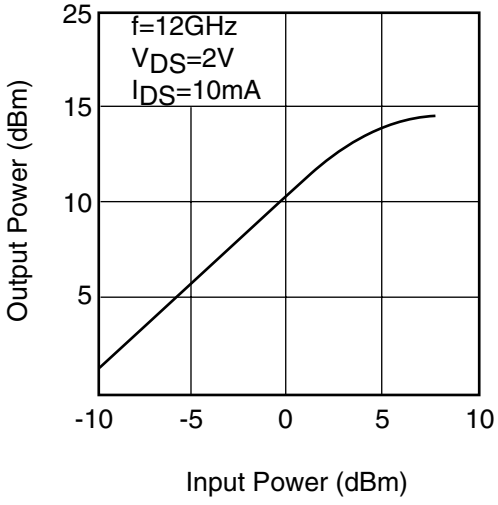

TYPICAL NOISE FIGURE CIRCLE

FHX13LG

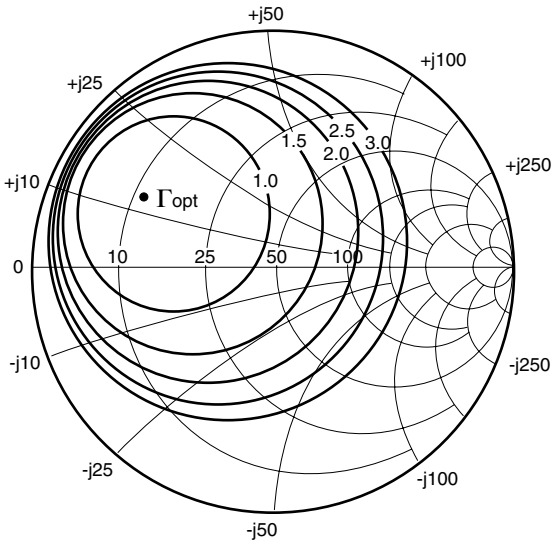

f = 12 GHz
V_{DS} = 2V
I_{DS} = 10mA

Γopt = 0.61∠150°
Rn/50 = 0.04
NFmin = 0.45dB

Ga(max) & $|S_{21}|^2$ vs. FREQUENCY

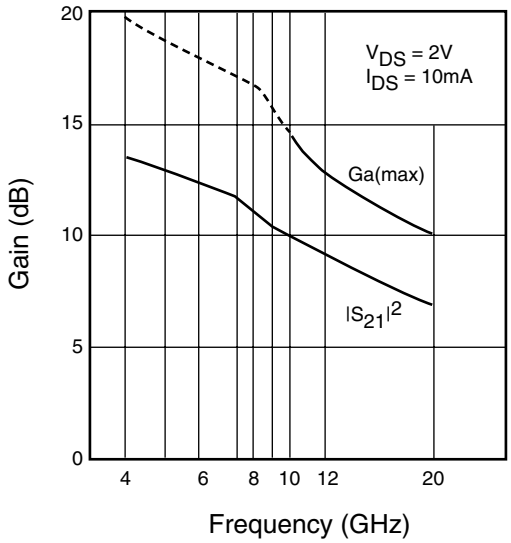

NOISE PARAMETERS

FHX13LG
V_{DS}=2V, I_{DS}=10mA

Freq. (GHz)	Γopt (MAG)	Γopt (ANG)	NFmin (dB)	Rn/50
2	0.96	29	0.33	0.22
4	0.92	57	0.34	0.20
6	0.86	83	0.35	0.15
8	0.79	107	0.37	0.11
10	0.71	129	0.40	0.07
12	0.61	150	0.45	0.04
14	0.50	168	0.53	0.04
16	0.38	-175	0.63	0.06
18	0.24	-161	0.83	0.10

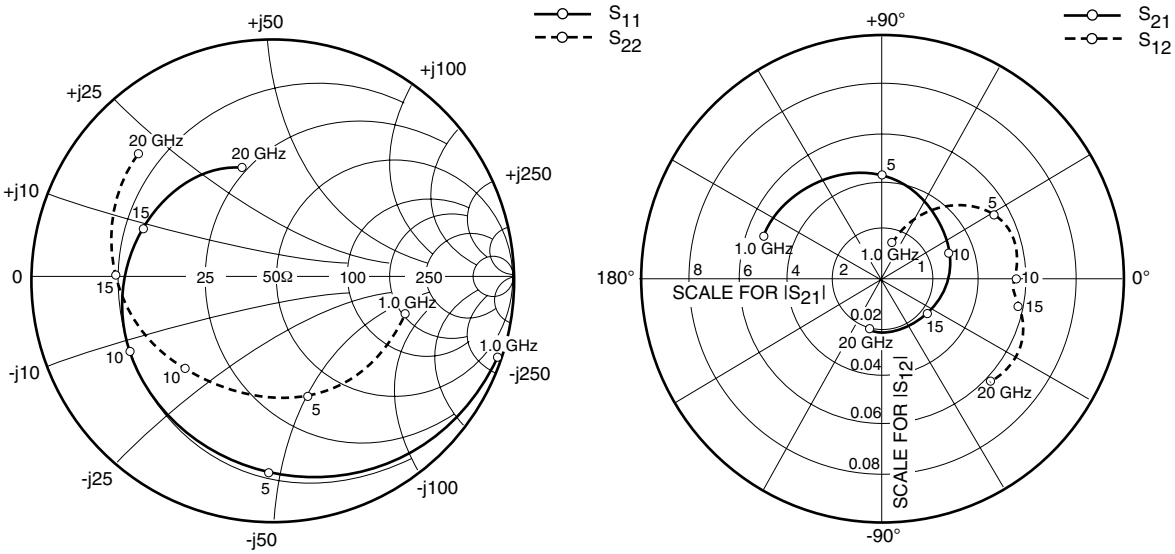

S-PARAMETERS
FHX13/14LG
V_{DS} = 2V, I_{DS} = 10mA

FREQUENCY	S11		S21		S12		S22	
(MHZ)	MAG	ANG	MAG	ANG	MAG	ANG	MAG	ANG
1000	0.988	-20.0	5.327	160.1	0.015	75.7	0.574	-16.3
2000	0.956	-39.5	5.133	141.0	0.028	63.3	0.560	-32.1
3000	0.908	-58.1	4.851	123.0	0.039	50.1	0.539	-47.3
4000	0.862	-75.5	4.534	105.9	0.048	39.0	0.522	-62.0
5000	0.811	-91.6	4.213	89.7	0.053	29.3	0.502	-75.6
6000	0.763	-107.1	3.886	74.4	0.056	21.0	0.488	-89.6
7000	0.727	-121.1	3.582	60.0	0.057	13.2	0.487	-103.0
8000	0.701	-133.3	3.300	46.4	0.056	7.9	0.498	-114.9
9000	0.682	-144.1	3.078	33.8	0.055	3.5	0.515	-125.0
10000	0.659	-154.2	2.899	21.4	0.055	-0.0	0.531	-134.4
11000	0.636	-164.4	2.748	9.3	0.054	-2.6	0.544	-144.0
12000	0.618	-175.4	2.593	-3.3	0.054	-5.2	0.561	-155.1
13000	0.608	175.5	2.466	-14.8	0.054	-5.7	0.590	-164.0
14000	0.596	166.6	2.366	-26.6	0.055	-7.8	0.619	-172.4
15000	0.585	158.3	2.279	-38.3	0.056	-9.7	0.654	-179.7
16000	0.564	148.8	2.244	-50.7	0.058	-12.8	0.677	172.6
17000	0.543	138.2	2.217	-63.6	0.061	-17.6	0.701	163.4
18000	0.525	127.3	2.185	-77.1	0.063	-24.7	0.727	154.1
19000	0.506	116.2	2.143	-91.4	0.063	-33.1	0.748	143.6
20000	0.470	106.5	2.089	-105.4	0.061	-43.7	0.763	137.2

Download S-Parameters, click here

Case Style "LG"

Metal-Ceramic Hermetic Package

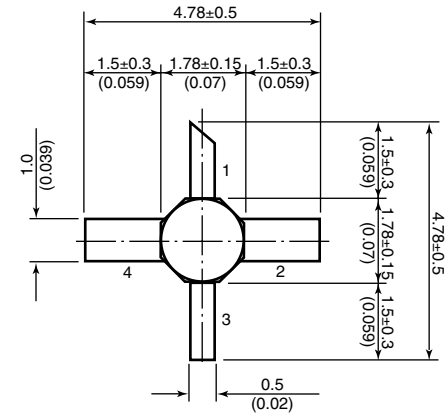

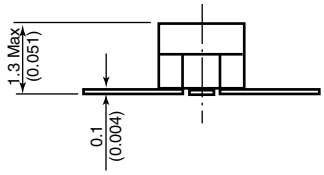

1. **Gate**
2. **Source**
3. **Drain**
4. **Source**

Unit: mm(inches)

For further information please contact:

FUJITSU COMPOUND SEMICONDUCTOR, INC.
2355 Zanker Rd.
San Jose, CA 95131-1138, U.S.A.
Phone: (408) 232-9500
FAX: (408) 428-9111
www.fcsi.fujitsu.com

FUJITSU MICROELECTRONICS, LTD.
Compound Semiconductor Division
Network House
Norreys Drive
Maidenhead, Berkshire SL6 4FJ
Phone:+44 (0)1628 504800
FAX:+44 (0)1628 504888

CAUTION

Fujitsu Compound Semiconductor Products contain **gallium arsenide (GaAs)** which can be hazardous to the human body and the environment. For safety, observe the following procedures:

- **Do not put these products into the mouth.**
- **Do not alter the form of this product into a gas, powder, or liquid through burning, crushing, or chemical processing as these by-products are dangerous to the human body if inhaled, ingested, or swallowed.**
- **Observe government laws and company regulations when discarding this product. This product must be discarded in accordance with methods specified by applicable hazardous waste procedures.**

Fujitsu Limited reserves the right to change products and specifications without notice.
The information does not convey any license under rights of Fujitsu Limited or others.

© 1998 FUJITSU COMPOUND SEMICONDUCTOR, INC.

Printed in U.S.A. FCSI0598M200

SuperHEMT™ is a trademark of Fujitsu Limited.

FUJITSU

Компания «ЭлектроПласт» предлагает заключение долгосрочных отношений при поставках импортных электронных компонентов на взаимовыгодных условиях!

Наши преимущества:

- Оперативные поставки широкого спектра электронных компонентов отечественного и импортного производства напрямую от производителей и с крупнейших мировых складов;
- Поставка более 17-ти миллионов наименований электронных компонентов;
- Поставка сложных, дефицитных, либо снятых с производства позиций;
- Оперативные сроки поставки под заказ (от 5 рабочих дней);
- Экспресс доставка в любую точку России;
- Техническая поддержка проекта, помощь в подборе аналогов, поставка прототипов;
- Система менеджмента качества сертифицирована по Международному стандарту ISO 9001;
- Лицензия ФСБ на осуществление работ с использованием сведений, составляющих государственную тайну;
- Поставка специализированных компонентов (Xilinx, Altera, Analog Devices, Intersil, Interpoint, Microsemi, Aeroflex, Peregrine, Syfer, Eurofarad, Texas Instrument, Miteq, Cobham, E2V, MA-COM, Hittite, Mini-Circuits,General Dynamics и др.);

Помимо этого, одним из направлений компании «ЭлектроПласт» является направление «Источники питания». Мы предлагаем Вам помощь Конструкторского отдела:

- Подбор оптимального решения, техническое обоснование при выборе компонента;
- Подбор аналогов;
- Консультации по применению компонента;
- Поставка образцов и прототипов;
- Техническая поддержка проекта;
- Защита от снятия компонента с производства.

Как с нами связаться

Телефон: 8 (812) 309 58 32 (многоканальный)
Факс: 8 (812) 320-02-42
Электронная почта: org@eplast1.ru
Адрес: 198099, г. Санкт-Петербург, ул. Калинина, дом 2, корпус 4, литера А.