SGS-THOMSON MICROELECTRONICS

UA748

PRECISION SINGLE OPERATIONAL AMPLIFIER

- INPUT OFFSET VOLTAGE : 3mV max. OVER TEMPERATURE
- FREQUENCY COMPENSATION WITH A SINGLE 30pF CAPACITOR (C1)
- OPERATION FROM ±5V to ±15V
- LOW POWER CONSUMPTION : 50mW AT ±15V
- CONTINUOUS SHORT-CIRCUIT PROTECTION
- OPERATION AS A COMPARATOR WITH DIFFERENTIAL INPUTS AS HIGH AS ±30V
- NO LATCH-UP WHEN COMMON-MODE RANGE IS EXCEEDED
- SAME PIN CONFIGURATION AS THE LM101A

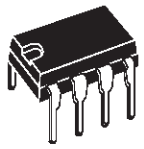

N
DIP8
(Plastic Package)

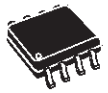

D
SO8
(Plastic Micropackage)

ORDER CODES

Part Number	Temperature Range	Package	
		N	D
UA748C	0°C, +70°C	•	•
UA748I	-40°C, +105°C	•	•
UA748M	-55°C, +125°C	•	•
Example : UA748CN			

DESCRIPTION

The UA748 is a general purpose operational amplifier built on a single silicon chip. The resulting close match and tight thermal coupling gives low offsets and temperature drift as well as fast recovery from thermal transients.

- Short-circuit protection
- Offset voltage null capability
- Large common-mode and differential voltage ranges
- Low power consumption
- No latch-up

The unity-gain compensation specified makes the circuit stable for all feedback configurations, even with capacitive loads. However, it is possible to optimize compensation for best high frequency performance at any gain. The low power dissipation permits high voltage operation and simplifies packaging in full-temperature range systems.

PIN CONNECTIONS (top view)

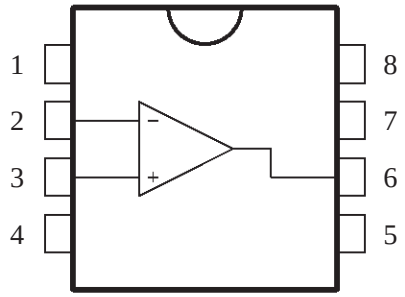

1 - Offset null 1 / frequency compensation
2 - Inverting input
3 - Non-inverting input
4 - V_{CC}^-
5 - Offset null 2
6 - Output
7 - V_{CC}^+
8 - Frequency compensation

SCHEMATIC DIAGRAM

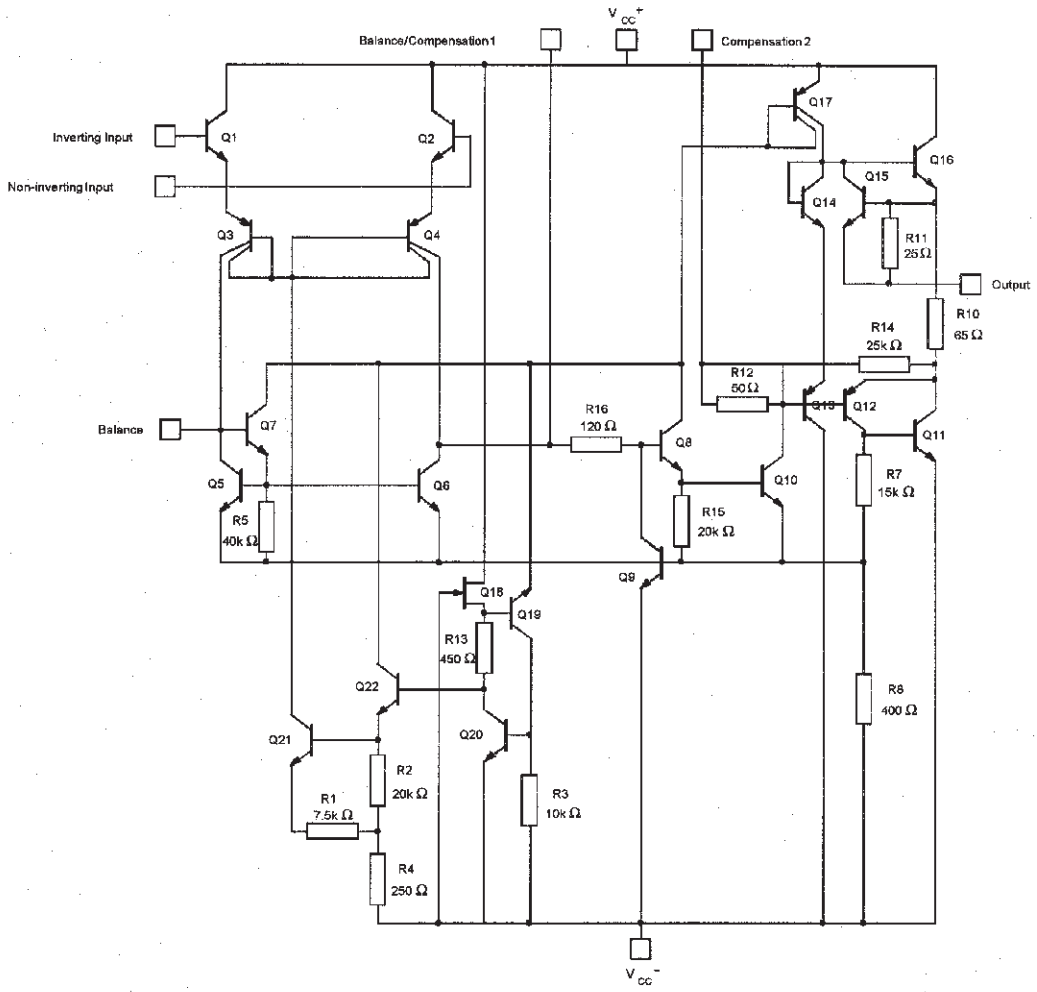

ABSOLUTE MAXIMUM RATINGS

Symbol	Parameter	UA748M	UA748I	UA748C	Unit
V_{cc}	Supply Voltage	±22			V
V_{id}	Differential Input Voltage	±30			V
V_i	Input Voltage	±15			V
P_{tot}	Power Dissipation	500			mW
	Output Short-circuit Duration	Infinite			
T_{oper}	Operating Free Air Temperature Range	-55 to +125	-40 to +105	0 to +70	°C
T_{stg}	Storage Temperature Range	-65 to +150	-65 to +150	-65 to +150	°C

ELECTRICAL CHARACTERISTICS

$\pm 5V \leq V_{CC} \leq \pm 20V$, C1 = 30pF, T_{amb} = +25°C (unless otherwise specified)

Symbol	Parameter	UA748I/M			UA748C			Unit
		Min.	Typ.	Max.	Min.	Typ.	Max.	
V_{io}	Input Offset Voltage ($R_S \leq 10k\Omega$) T_{amb} = +25°C $T_{min.} \leq T_{amb} \leq T_{max.}$		0.2	2 3		2	7.5 10	mV
I_{io}	Input Offset Current T_{amb} = +25°C $T_{min.} \leq T_{amb} \leq T_{max.}$		25	75 10		70	250 300	nA
I_{ib}	Input Bias Current T_{amb} = +25°C $T_{min.} \leq T_{amb} \leq T_{max.}$		1.5	10 20		2	50 70	nA
A_{vd}	Large Signal Voltage Gain * ($V_{CC} = \pm 15V$, $V_O \pm 10V$, $R_L = 2k\Omega$) T_{amb} = +25°C $T_{min.} \leq T_{amb} \leq T_{max.}$	50 25	100		25 15	10		V/mV
SVR	Supply Voltage Rejection Ratio ($R_S \leq 10k\Omega$) T_{amb} = +25°C $T_{min.} \leq T_{amb} \leq T_{max.}$	80 80	96		70 70	96		dB
I_{CC}	Supply Current, no load T_{amb} = +25°C $T_{min.} \leq T_{amb} \leq T_{max.}$		1.8	3 3		1.8	3 3	mA
V_{icm}	Input Common Mode Voltage Range (V_{CC} = ±20V) T_{amb} = +25°C $T_{min.} \leq T_{amb} \leq T_{max.}$	±15 ±15			±15 ±15			V
CMR	Common-mode Rejection Ratio ($R_S \leq 10k\Omega$) T_{amb} = +25°C $T_{min.} \leq T_{amb} \leq T_{max.}$	80 80	96		70 70	96		dB
I_{OS}	Output Short-circuit Current ($V_{CC} = \pm 15V$)	10	30	50	10	30	50	mA
$\pm V_{OPP}$	Output Voltage Swing ($V_{CC} = \pm 15V$) T_{amb} = +25°C $R_L = 10k\Omega$ $R_L = 2k\Omega$ $T_{min.} \leq T_{amb} \leq T_{max.}$ $R_L = 10k\Omega$ $R_L = 2k\Omega$	12 10 12 10	14 13		12 10 12 10	14 13		V
SR	Slew Rate ($V_i = \pm 10V$, $R_L = 2k\Omega$, C_L= 100pF, unity gain)	0.25	0.5		0.25	0.5		V/µs
t_r	Rise Time ($V_i = \pm 20mV$, $R_L = 2k\Omega$, C_L = 100pF, unity gain)		0.3			0.3		µs
K_{OV}	Overshoot (V_i = 20mV, $R_L = 2k\Omega$, CL = 100pF, unity gain)		5			5		%
Z_I	Input Impedance ($V_{CC} = \pm 15V$)	1.5	4		1.5	4		MΩ
R_o	Output Resistance ($V_{CC} = \pm 15V$)		75			75		Ω
GBP	Gain Bandwidth Product (V_i = 10mV, $R_L = 2k\Omega$, C_L= 100pF, f = 100kHz)	0.5	1		0.5	1		MHz
THD	Total Harmonic Distortion (f = 1kHz, A_V = 20dB, $R_L = 2k\Omega$, $V_O = 2V_{PP}$, C_L = 100pF)		0.015			0.015		%
DV_{io}	Input Offset Current Drift 25°C ≤ $T_{amb} \leq T_{max.}$ $T_{min.} \leq T_{amb} \leq T_{max.}$		10 20	100 200		10 20	300 600	pA/°C
DI_{io}	Input Offset Voltage Drift $T_{min.} \leq T_{amb} \leq T_{max.}$		3	15		6	30	µV/°C

CURRENT LIMITING

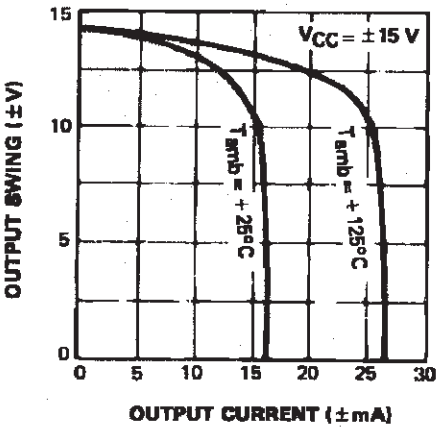

INPUT CURRENT

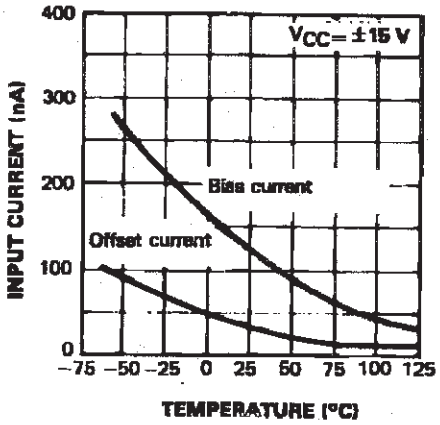

OPEN LOOP FREQUENCY RESPONSE

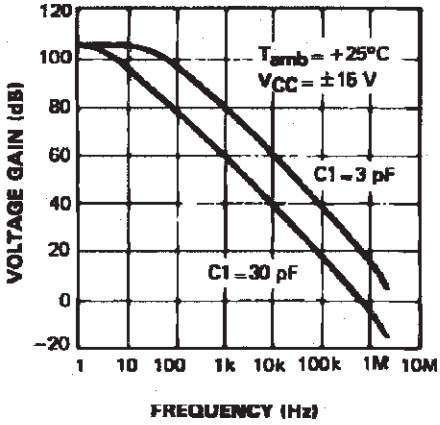

LARGE SIGNAL FREQUENCY RESPONSE

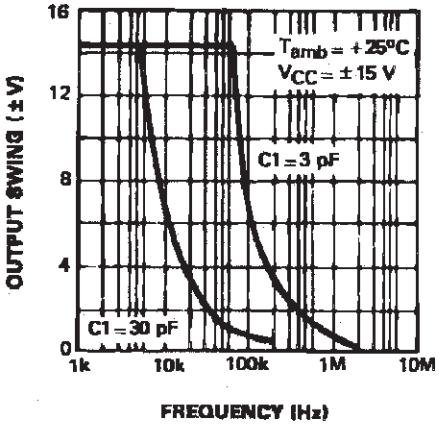

FREQUENCY COMPENSATION

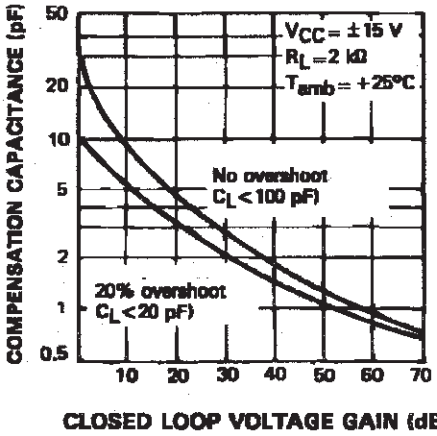

VOLTAGE FOLLOWER PULSE RESPONSE

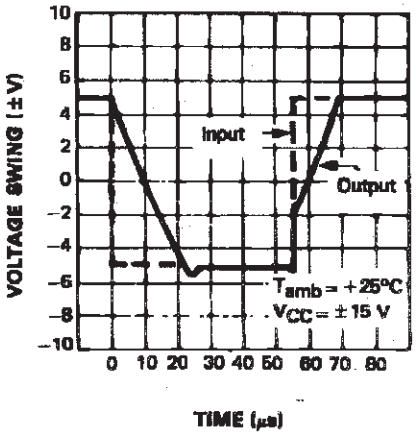

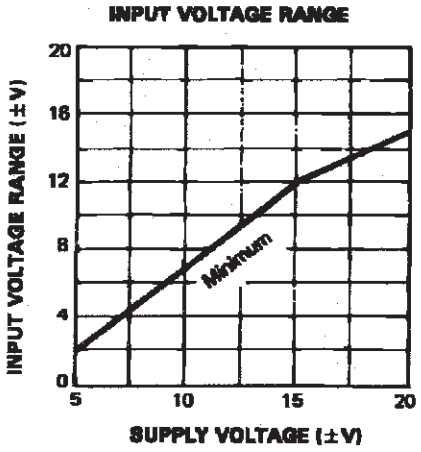
INPUT VOLTAGE RANGE
INPUT VOLTAGE RANGE (±V)
20
16
12
8
4
0
5
10
15
20
Minimum
SUPPLY VOLTAGE (±V)

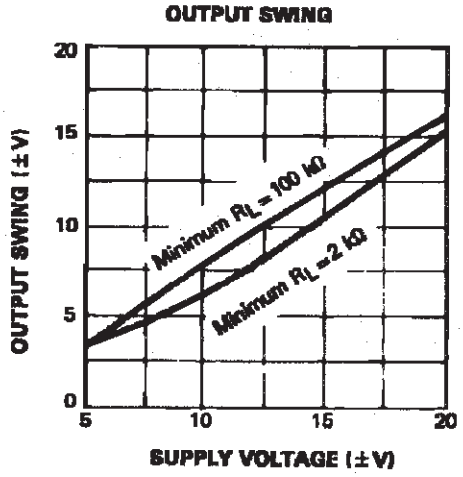
OUTPUT SWING
OUTPUT SWING (±V)
20
15
10
5
0
5
10
15
20
Minimum RL = 100 kΩ
Minimum RL = 2 kΩ
SUPPLY VOLTAGE (±V)

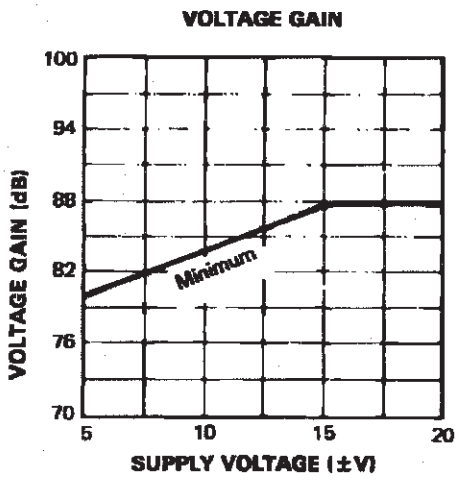
VOLTAGE GAIN
VOLTAGE GAIN (dB)
100
94
88
82
76
70
5
10
15
20
Minimum
SUPPLY VOLTAGE (±V)

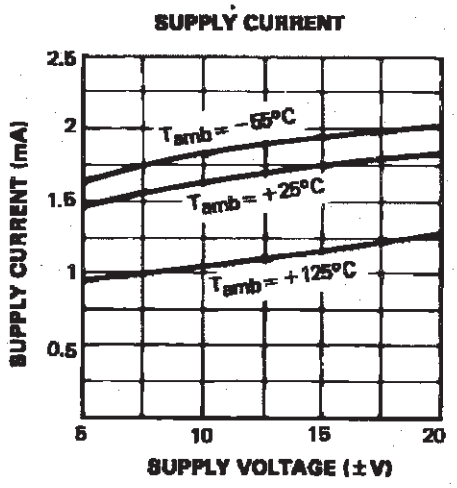
SUPPLY CURRENT
SUPPLY CURRENT (mA)
2.5
2
1.5
1
0.5
5
10
15
20
Tamb = −55°C
Tamb = +25°C
Tamb = +125°C
SUPPLY VOLTAGE (±V)

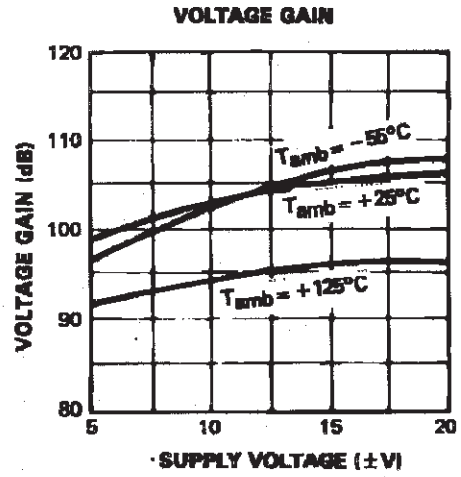
VOLTAGE GAIN
VOLTAGE GAIN (dB)
120
110
100
90
80
5
10
15
20
Tamb = −55°C
Tamb = +25°C
Tamb = +125°C
SUPPLY VOLTAGE (±V)

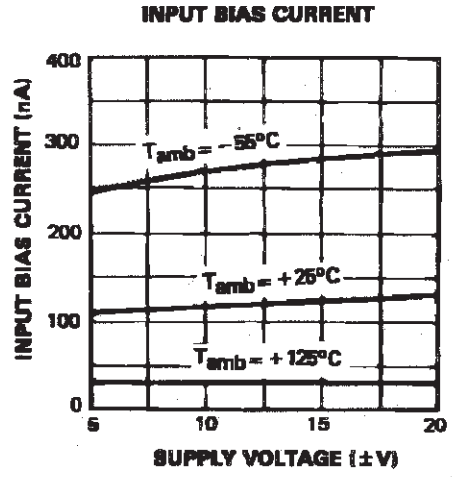
INPUT BIAS CURRENT
INPUT BIAS CURRENT (nA)
400
300
200
100
0
5
10
15
20
Tamb = −55°C
Tamb = +25°C
Tamb = +125°C
SUPPLY VOLTAGE (±V)

TYPICAL APPLICATIONS

PRACTICAL DIFFERENTIATOR

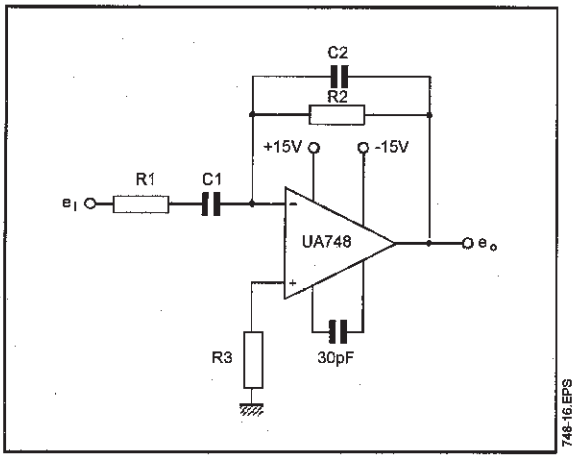

SINGLE SUPPLY OPERATION

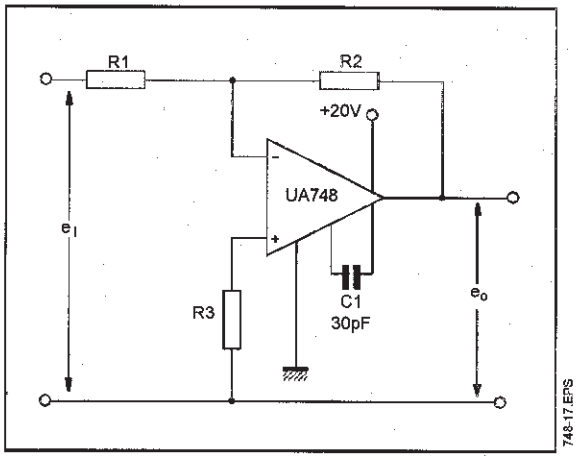

PULSE WIDTH MODULATOR

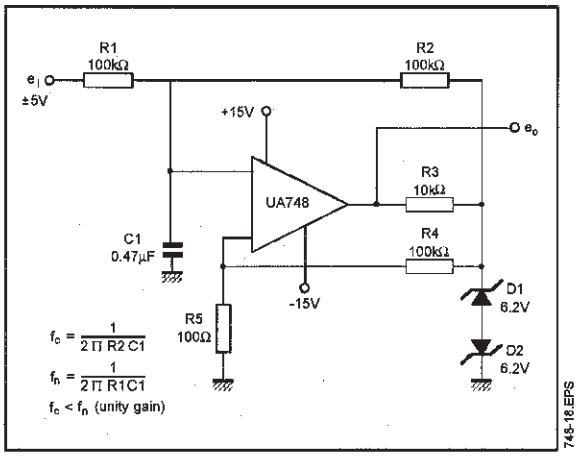

FEED-FORWARD COMPENSATION

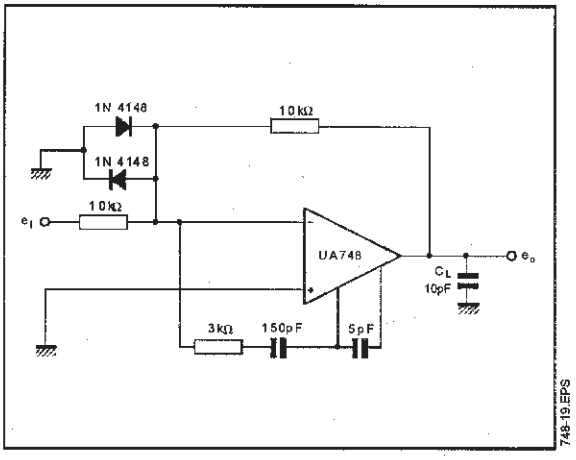

LARGE SIGNAL FEED-FORWARD TRANSIENT RESPONSE

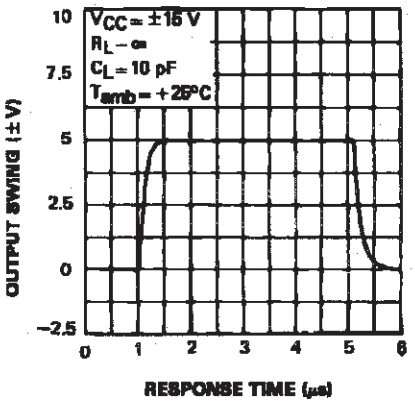

PACKAGE MECHANICAL DATA
8 PINS - PLASTIC DIP

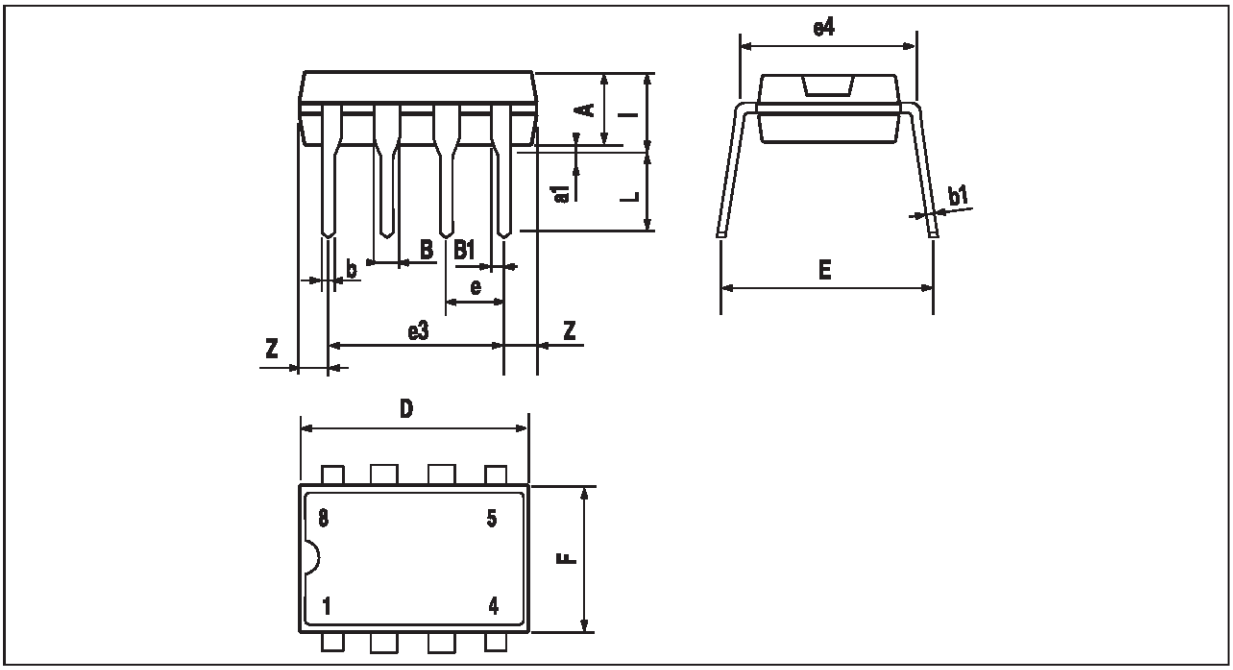

Dim.	Millimeters			Inches		
	Min.	Typ.	Max.	Min.	Typ.	Max.
A		3.32			0.131	
a1	0.51			0.020		
B	1.15		1.65	0.045		0.065
b	0.356		0.55	0.014		0.022
b1	0.204		0.304	0.008		0.012
D			10.92			0.430
E	7.95		9.75	0.313		0.384
e		2.54			0.100	
e3		7.62			0.300	
e4		7.62			0.300	
F			6.6			0260
i			5.08			0.200
L	3.18		3.81	0.125		0.150
Z			1.52			0.060

PACKAGE MECHANICAL DATA
8 PINS - PLASTIC MICROPACKAGE (SO)

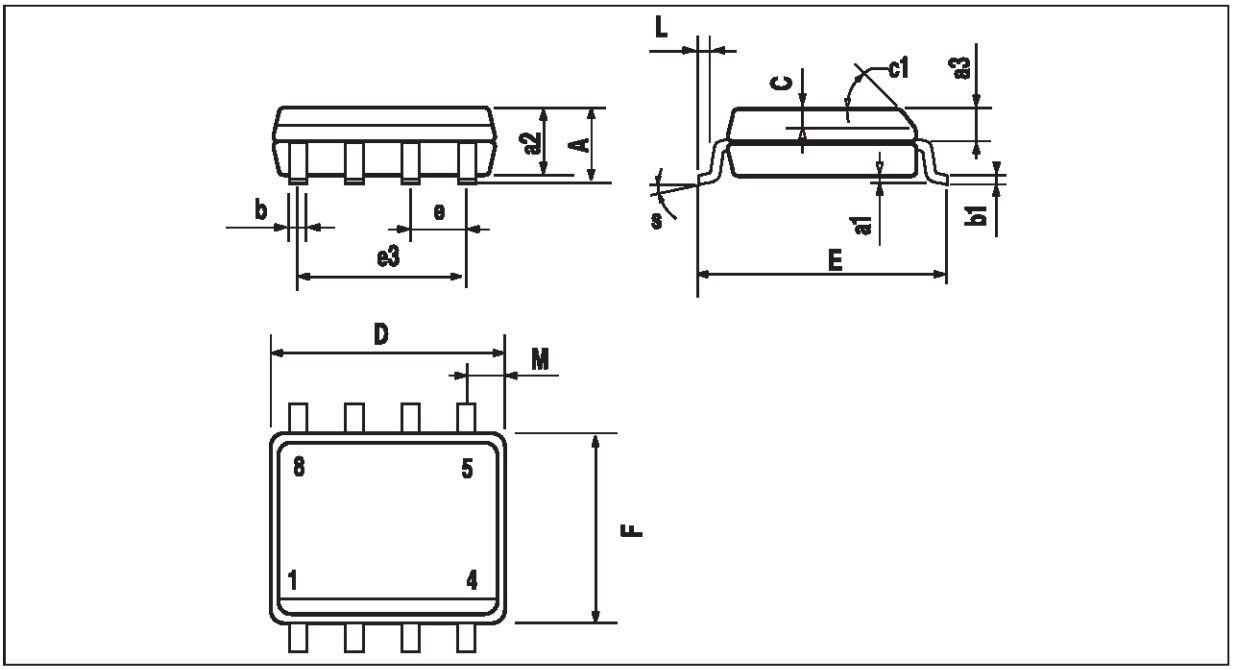

Dim.	Millimeters			Inches		
	Min.	Typ.	Max.	Min.	Typ.	Max.
A			1.75			0.069
a1	0.1		0.25	0.004		0.010
a2			1.65			0.065
a3	0.65		0.85	0.026		0.033
b	0.35		0.48	0.014		0.019
b1	0.19		0.25	0.007		0.010
C	0.25		0.5	0.010		0.020
c1	45° (typ.)					
D	4.8		5.0	0.189		0.197
E	5.8		6.2	0.228		0.244
e		1.27			0.050	
e3		3.81			0.150	
F	3.8		4.0	0.150		0.157
L	0.4		1.27	0.016		0.050
M			0.6			0.024
S	8° (max.)					

Information furnished is believed to be accurate and reliable. However, SGS-THOMSON Microelectronics assumes no responsibility for the consequences of use of such information nor for any infringement of patents or other rights of third parties which may result from its use. No license is granted by implication or otherwise under any patent or patent rights of SGS-THOMSON Microelectronics. Specifications mentioned in this publication are subject to change without notice. This publication supersedes and replaces all information previously supplied. SGS-THOMSON Microelectronics products are not authorized for use as critical components in life support devices or systems without express written approval of SGS-THOMSON Microelectronics.

© 1997 SGS-THOMSON Microelectronics – Printed in Italy – All Rights Reserved

SGS-THOMSON Microelectronics GROUP OF COMPANIES
Australia - Brazil - Canada - China - France - Germany - Italy - Japan - Korea - Malaysia - Malta - Morocco
The Netherlands - Singapore - Spain - Sweden - Switzerland - Taiwan - Thailand - United Kingdom - U.S.A.

Компания «ЭлектроПласт» предлагает заключение долгосрочных отношений при поставках импортных электронных компонентов на взаимовыгодных условиях!

Наши преимущества:

- Оперативные поставки широкого спектра электронных компонентов отечественного и импортного производства напрямую от производителей и с крупнейших мировых складов;
- Поставка более 17-ти миллионов наименований электронных компонентов;
- Поставка сложных, дефицитных, либо снятых с производства позиций;
- Оперативные сроки поставки под заказ (от 5 рабочих дней);
- Экспресс доставка в любую точку России;
- Техническая поддержка проекта, помощь в подборе аналогов, поставка прототипов;
- Система менеджмента качества сертифицирована по Международному стандарту ISO 9001;
- Лицензия ФСБ на осуществление работ с использованием сведений, составляющих государственную тайну;
- Поставка специализированных компонентов (Xilinx, Altera, Analog Devices, Intersil, Interpoint, Microsemi, Aeroflex, Peregrine, Syfer, Eurofarad, Texas Instrument, Miteq, Cobham, E2V, MA-COM, Hittite, Mini-Circuits,General Dynamics и др.);

Помимо этого, одним из направлений компании «ЭлектроПласт» является направление «Источники питания». Мы предлагаем Вам помощь Конструкторского отдела:

- Подбор оптимального решения, техническое обоснование при выборе компонента;
- Подбор аналогов;
- Консультации по применению компонента;
- Поставка образцов и прототипов;
- Техническая поддержка проекта;
- Защита от снятия компонента с производства.

Как с нами связаться

Телефон: 8 (812) 309 58 32 (многоканальный)
Факс: 8 (812) 320-02-42
Электронная почта: org@eplast1.ru
Адрес: 198099, г. Санкт-Петербург, ул. Калинина, дом 2, корпус 4, литера А.