11AA02E48

2K UNI/O® Serial EEPROM with EUI-48™ Node Identity

DEVICE SELECTION TABLE

Part Number	Density (bits)	Organization	VCC Range	Page Size (Bytes)	Temp. Ranges	Packages
11AA02E48	2K	256 x 8	1.8-5.5V	16	I	SN, TT

Features:

- Pre-programmed Globally Unique, 48-bit Node Address
- Compatible with EUI-48™ and EUI-64™
- Single I/O, UNI/O® Serial Interface Bus
- Low-Power CMOS Technology
  - 1 mA active current, typical
  - 1 µA standby current (max.)
- 256 x 8 Bit Organization
- Schmitt Trigger Inputs for Noise Suppression
- Output Slope Control to Eliminate Ground Bounce
- 100 kbps Max. Bit Rate – Equivalent to 100 kHz Clock Frequency
- Self-Timed Write Cycle (including Auto-Erase)
- Page-Write Buffer for up to 16 Bytes
- STATUS Register for Added Control:
  - Write enable latch bit
  - Write-In-Progress bit
- Block Write Protection
  - Protect none, 1/4, 1/2 or all of array
- Built-in Write Protection
  - Power-on/off data protection circuitry
  - Write enable latch
- High Reliability
  - Endurance: 1,000,000 erase/write cycles
  - Data retention: > 200 years
  - ESD protection: > 4,000V
- 3-lead SOT-23 and 8-lead SOIC Packages
- Pb-Free and RoHS Compliant
- Available Temperature Ranges:
  - Industrial (I): -40°C to +85°C

Pin Function Table

Name	Function
SCIO	Serial Clock, Data Input/Output
VSS	Ground
VCC	Supply Voltage

Description:

The Microchip Technology Inc. 11AA02E48 device is a 2 Kbit Serial Electrically Erasable PROM. The device is organized in blocks of x8-bit memory and support the patented* single I/O UNI/O® serial bus. By using Manchester encoding techniques, the clock and data are combined into a single, serial bit stream (SCIO), where the clock signal is extracted by the receiver to correctly decode the timing and value of each bit.

Low-voltage design permits operation down to 1.8V, with standby and active currents of only 1 uA and 1 mA, respectively.

The 11AA02E48 is available in standard 8-lead SOIC and 3-lead SOT-23 packages.

Package Types (not to scale)

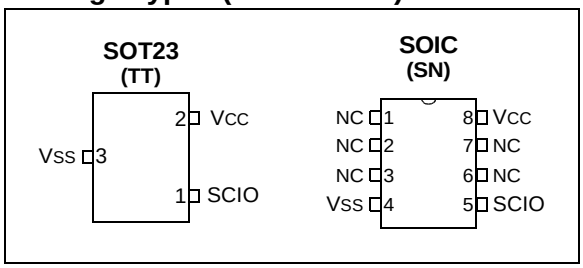

Note: This document is supplemented by the "*11AAXXX/11LCXXX Family Data Sheet*" (DS22067). See **Section 2.0 "Functional Description"**.

* Microchip's UNI/O® Bus products are covered by the following patent issued in the U.S.A.: 7,376,020.

1.0 ELECTRICAL CHARACTERISTICS

Absolute Maximum Ratings (†)

V_{CC} 6.5V

SCIO w.r.t. V_{SS} ..... -0.6V to V_{CC}+1.0V

Storage temperature ..... -65°C to 150°C

Ambient temperature under bias ..... -40°C to 85°C

ESD protection on all pins ..... 4 kV

† NOTICE: Stresses above those listed under 'Absolute Maximum Ratings' may cause permanent damage to the device. This is a stress rating only and functional operation of the device at those or any other conditions above those indicated in the operational listings of this specification is not implied. Exposure to maximum rating conditions for an extended period of time may affect device reliability.

TABLE 1-1: DC CHARACTERISTICS

DC CHARACTERISTICS			Electrical Characteristics: Industrial (I): V_{CC} = 2.5V to 5.5V T_A = -40°C to +85°C V_{CC} = 1.8V to 2.5V T_A = -20°C to +85°C			
Param. No.	**Sym.**	**Characteristic**	**Min.**	**Max.**	**Units**	**Test Conditions**
D1	V_{IH}	High-level Input Voltage	0.7*V_{CC}	V_{CC}+1	V	
D2	V_{IL}	Low-level Input Voltage	-0.3 -0.3	0.3*V_{CC} 0.2*V_{CC}	V V	$V_{CC} \geq$ 2.5V V_{CC} < 2.5V
D3	V_{HYS}	Hysteresis of Schmitt Trigger inputs (SCIO)	0.05*Vcc	—	V	$V_{CC} \geq$ 2.5V **(Note 1)**
D4	V_{OH}	High-level Output Voltage	V_{CC} -0.5 V_{CC} -0.5	— —	V V	I_{OH} = -300 µA, V_{CC} = 5.5V I_{OH} = -200 µA, Vcc = 2.5V
D5	V_{OL}	Low-level Output Voltage	— —	0.4 0.4	V V	IoI = 300 µA, V_{CC} = 5.5V IoI = 200 µA, Vcc = 2.5V
D6	I_O	Output Current Limit **(Note 2)**	— —	±4 ±3	mA mA	V_{CC} = 5.5V **(Note 1)** Vcc = 2.5V **(Note 1)**
D7	I_{LI}	Input Leakage Current (SCIO)	—	±1	µA	V_{IN} = V_{SS} or V_{CC}
D8	C_{INT}	Internal Capacitance (all inputs and outputs)	—	7	pF	T_A = 25°C, F_{CLK} = 1 MHz, V_{CC} = 5.0V **(Note 1)**
D9	I_{CC} Read	Read Operating Current	— —	3 1	mA mA	V_{CC}=5.5V, F_{BUS}=100 kHz, C_B=100 pF V_{CC}=2.5V, F_{BUS}=100 kHz, C_B=100 pF
D10	I_{CC} Write	Write Operating Current	— —	5 3	mA mA	V_{CC} = 5.5V V_{CC} = 2.5V
D11	Iccs	Standby Current	—	1	µA	V_{CC} = 5.5V, T_A = 85°C
D12	I_{CCI}	Idle Mode Current	—	50	µA	V_{CC} = 5.5V

Note 1: This parameter is periodically sampled and not 100% tested.

2: The SCIO output driver impedance will vary to ensure I_O is not exceeded.

 © 2008 Microchip Technology Inc.

TABLE 1-2: AC CHARACTERISTICS

AC CHARACTERISTICS			Electrical Characteristics: Industrial (I): V_{CC} = 2.5V to 5.5V T_A = -40°C to +85°C V_{CC} = 1.8V to 2.5V T_A = -20°C to +85°C			
Param. No.	**Sym.**	**Characteristic**	**Min.**	**Max.**	**Units**	**Test Conditions**
1	F_{BUS}	Serial Bus Frequency	10	100	kHz	—
2	T_E	Bit Period	10	100	µs	—
3	T_{IJIT}	Input Edge Jitter Tolerance	—	±0.08	UI	**(Note 3)**
4	F_{DRIFT}	Serial Bus Frequency Drift Rate Tolerance	—	±0.75	% per byte	—
5	F_{DEV}	Serial Bus Frequency Drift Limit	—	±5	% per command	—
6	T_{OJIT}	Output Edge Jitter	—	±0.25	UI	**(Note 3)**
7	T_R	SCIO Input Rise Time **(Note 1)**	—	100	ns	—
8	T_F	SCIO Input Fall Time **(Note 1)**	—	100	ns	—
9	T_{STBY}	Standby Pulse Time	600	—	µs	—
10	T_{SS}	Start Header Setup Time	10	—	µs	—
11	T_{HDR}	Start Header Low Pulse Time	5	—	µs	—
12	T_{SP}	Input Filter Spike Suppression (SCIO)	—	50	ns	**(Note 1)**
13	T_{WC}	Write Cycle Time (byte or page)	— —	5 10	ms ms	Write, WRSR commands ERAL, SETAL commands
14	—	Endurance (per page)	1M	—	cycles	25°C, V_{CC} = 5.5V **(Note 2)**

Note 1: This parameter is periodically sampled and not 100% tested.

2: This parameter is not tested but ensured by characterization. For endurance estimates in a specific application, please consult the Total Endurance™ Model which can be obtained on Microchip's web site: www.microchip.com.

3: A Unit Interval (UI) is equal to 1-bit period (T_E) at the current bus frequency.

TABLE 1-3: AC TEST CONDITIONS

AC Waveform:	
V_{LO} = 0.2V	
V_{HI} = V_{CC} - 0.2V	
C_L = 100 pF	
Timing Measurement Reference Level	
Input	0.5 V_{CC}
Output	0.5 V_{CC}

FIGURE 1-1: BUS TIMING – START HEADER

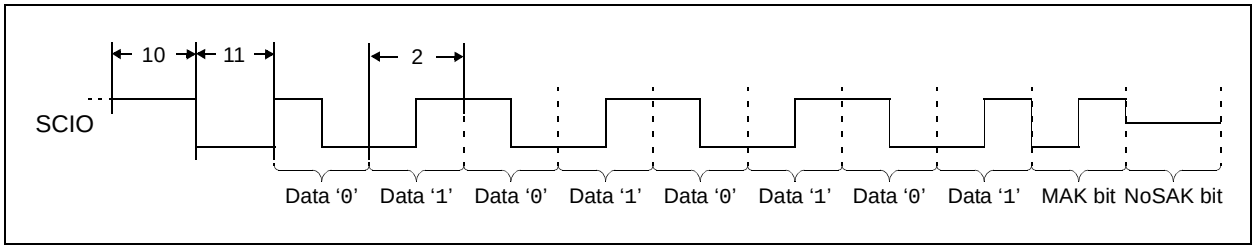

FIGURE 1-2: BUS TIMING – DATA

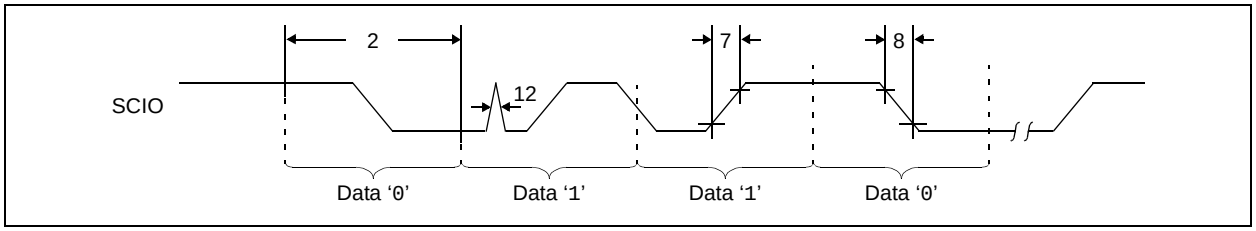

FIGURE 1-3: BUS TIMING – STANDBY PULSE

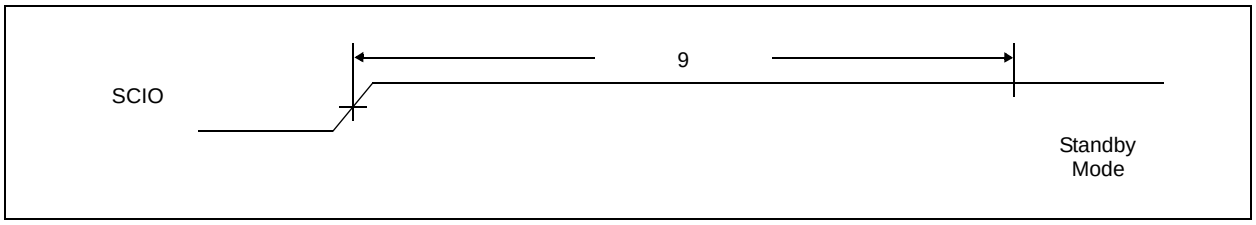

FIGURE 1-4: BUS TIMING – JITTER

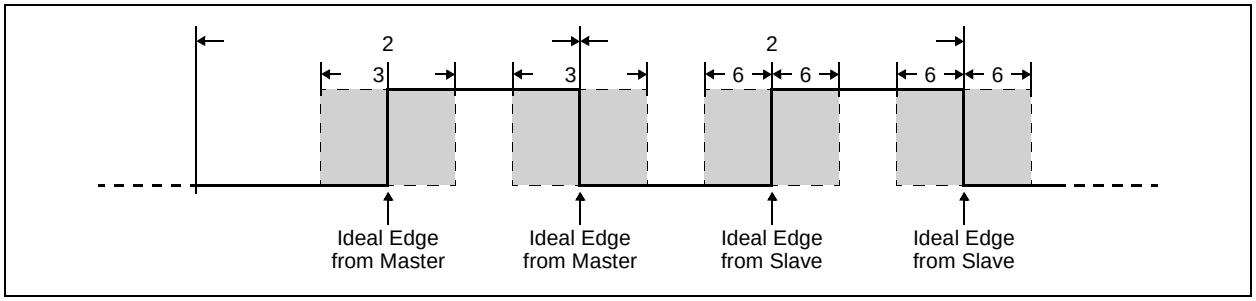

 © 2008 Microchip Technology Inc.

2.0 FUNCTIONAL DESCRIPTION

2.1 Principles of Operation

The 11AA02E48 family of serial EEPROMs support the UNI/O® protocol. They can be interfaced with microcontrollers, including Microchip's PIC® microcontrollers, ASICs, or any other device with an available discrete I/O line that can be configured properly to match the UNI/O protocol.

The 11AA02E48 devices contain an 8-bit instruction register. The devices are accessed via the SCIO pin.

Data is embedded into the I/O stream through Manchester encoding. The bus is controlled by a master device which determines the clock period, controls the bus access and initiates all operations, while the 11AA02E48 works as slave. Both master and slave can operate as transmitter or receiver, but the master device determines which mode is active.

FIGURE 2-1: BLOCK DIAGRAM

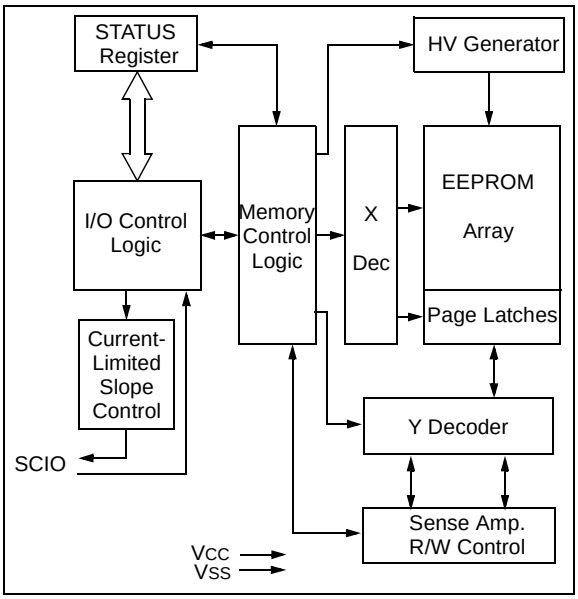

Note:	This data sheet documents only the device's features and specifications that are in addition to the features and specifications of the 11AA020 device. For information on the features and specifications shared by the 11AA02E48 and 11AA020 devices, see the "*11AAXXX/11LCXXX Family Data Sheet*" (DS22067).

3.0 PRE-PROGRAMMED EUI-48™ NODE ADDRESS

The 11AA02E48 is programmed at the factory with a globally unique, EUI-48™ and EUI-64™ compatible node address stored in the upper 1/4 of the array and write-protected through the STATUS register. The remaining 1,536 bits are available for application use.

FIGURE 3-1: MEMORY ORGANIZATION

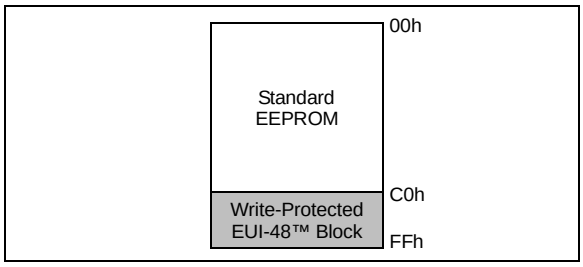

The 6-byte EUI-48™ node address value is stored in array locations 0xFA through 0xFF, as shown in Figure 3-2. The first 3 bytes are the Organizationally Unique Identifier (OUI) assigned to Microchip by the IEEE Registration Authority. The remaining 3 bytes are the Extension Identifier, and are generated by Microchip to ensure a globally-unique, 48-bit value.

3.1 EUI-64™ Support

The pre-programmed EUI-48 node address can easily be encapsulated at the application level to form a globally unique, 64-bit node address for systems utilizing the EUI-64 standard. This is done by adding 0xFFFE between the OUI and the Extension Identifier, as shown below.

FIGURE 3-2: EUI-48 NODE ADDRESS PHYSICAL MEMORY MAP EXAMPLE

Description	24-bit Organizationally Unique Identifier			24-bit Extension Identifier		
Data	00h	04h	A3h	12h	34h	56h
Array Address	FAh					FFh

Corresponding EUI-48™ Node Address: 00-04-A3-12-34-56

Corresponding EUI-64™ Node Address: 00-04-A3-FF-FE-12-34-56

3.2 Factory-Programmed Write Protection

In order to help guard against accidental corruption of the EUI-48 node address, the BP1 and BP0 bits of the STATUS register are programmed at the factory to ‘0’ and ‘1’, respectively, as shown in the following table:

7	6	5	4	3	2	1	0
X	X	X	X	BP1	BP0	WEL	WIP
—	—	—	—	0	1	—	—

This protects the upper 1/4 of the array (0xC0 to 0xFF) from write operations. This array block can be utilized for writing by clearing the BP bits with a Write Status Register (WRSR) instruction. Note that if this is performed, care must be taken to prevent overwriting the EUI-48 value.

 © 2008 Microchip Technology Inc.

4.0 PIN DESCRIPTIONS

The descriptions of the pins are listed in Table 4-1.

TABLE 4-1: PIN FUNCTION TABLE

Name	3-pin SOT-23	8-pin SOIC	Description
SCIO	1	5	Serial Clock, Data Input/Output
VCC	2	8	Supply Voltage
VSS	3	4	Ground
NC	—	1,2,3,6,7	No Internal Connection

4.1 Serial Clock, Data Input/Output (SCIO)

SCIO is a bidirectional pin used to transfer commands and addresses into, as well as data into and out of, the device. The serial clock is embedded into the data stream through Manchester encoding. Each bit is represented by a signal transition at the middle of the bit period.

5.0 PACKAGING INFORMATION

5.1 Package Marking Information

8-Lead SOIC

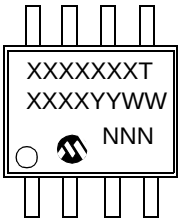

Example:

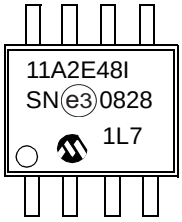

3-Lead SOT-23

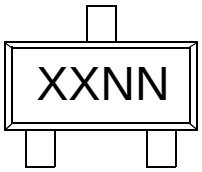

Example:

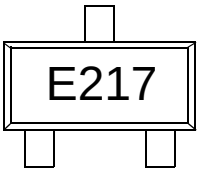

Part Number	1st Line Marking Code
	SOT-23
	I Temp.
11AA02E48	E2NN

Note: NN = Alphanumeric traceability code

Legend:	XX...X	Customer-specific information
	Y	Year code (last digit of calendar year)
	YY	Year code (last 2 digits of calendar year)
	WW	Week code (week of January 1 is week ‘01’)
	NNN	Alphanumeric traceability code
	e3	Pb-free JEDEC designator for Matte Tin (Sn)
	*	This package is Pb-free. The Pb-free JEDEC designator (e3) can be found on the outer packaging for this package.

Note: In the event the full Microchip part number cannot be marked on one line, it will be carried over to the next line, thus limiting the number of available characters for customer-specific information.

 © 2008 Microchip Technology Inc.

8-Lead Plastic Small Outline (SN) – Narrow, 3.90 mm Body [SOIC]

Note: For the most current package drawings, please see the Microchip Packaging Specification located at http://www.microchip.com/packaging

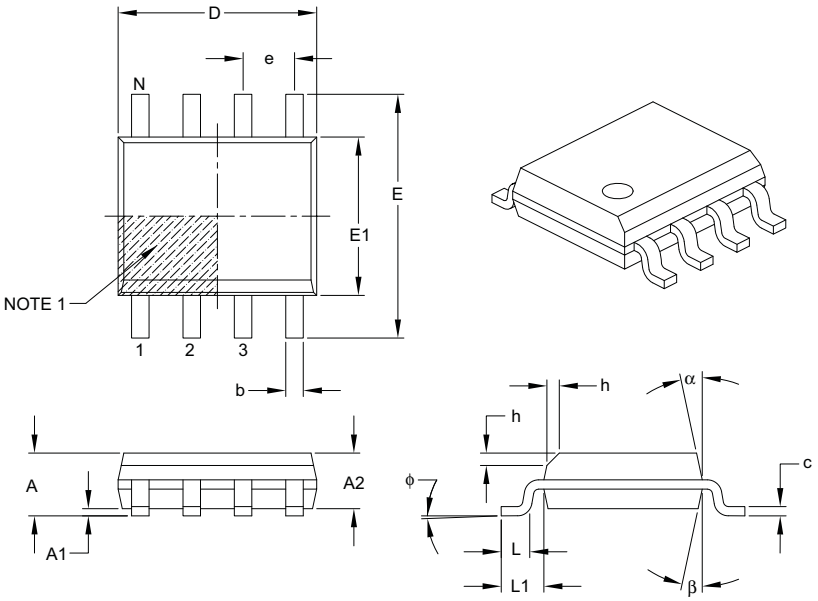

Units		MILLIMETERS		
Dimension Limits		MIN	NOM	MAX
Number of Pins	N	8		
Pitch	e	1.27 BSC		
Overall Height	A	–	–	1.75
Molded Package Thickness	A2	1.25	–	–
Standoff §	A1	0.10	–	0.25
Overall Width	E	6.00 BSC		
Molded Package Width	E1	3.90 BSC		
Overall Length	D	4.90 BSC		
Chamfer (optional)	h	0.25	–	0.50
Foot Length	L	0.40	–	1.27
Footprint	L1	1.04 REF		
Foot Angle	φ	0°	–	8°
Lead Thickness	c	0.17	–	0.25
Lead Width	b	0.31	–	0.51
Mold Draft Angle Top	α	5°	–	15°
Mold Draft Angle Bottom	β	5°	–	15°

Notes:

1. Pin 1 visual index feature may vary, but must be located within the hatched area.
2. § Significant Characteristic.
3. Dimensions D and E1 do not include mold flash or protrusions. Mold flash or protrusions shall not exceed 0.15 mm per side.
4. Dimensioning and tolerancing per ASME Y14.5M.
   BSC: Basic Dimension. Theoretically exact value shown without tolerances.
   REF: Reference Dimension, usually without tolerance, for information purposes only.

Microchip Technology Drawing C04-057B

8-Lead Plastic Small Outline (SN) – Narrow, 3.90 mm Body [SOIC]

Note: For the most current package drawings, please see the Microchip Packaging Specification located at http://www.microchip.com/packaging

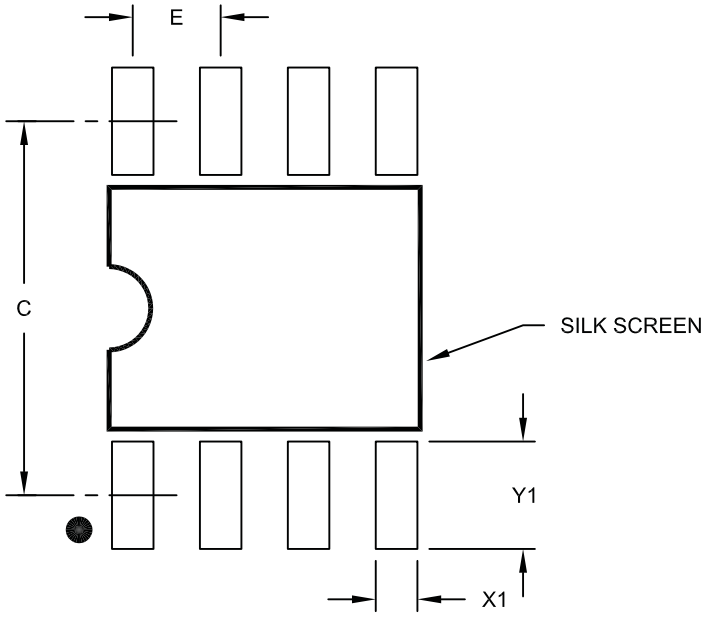

RECOMMENDED LAND PATTERN

Units		MILLIMETERS		
Dimension Limits		MIN	NOM	MAX
Contact Pitch	E		1.27 BSC	
Contact Pad Spacing	C		5.40	
Contact Pad Width (X8)	X1			0.60
Contact Pad Length (X8)	Y1			1.55

Notes:

1. Dimensioning and tolerancing per ASME Y14.5M
   BSC: Basic Dimension. Theoretically exact value shown without tolerances.

Microchip Technology Drawing No. C04-2057A

 © 2008 Microchip Technology Inc.

3-Lead Plastic Small Outline Transistor (TT) [SOT-23]

Note: For the most current package drawings, please see the Microchip Packaging Specification located at http://www.microchip.com/packaging

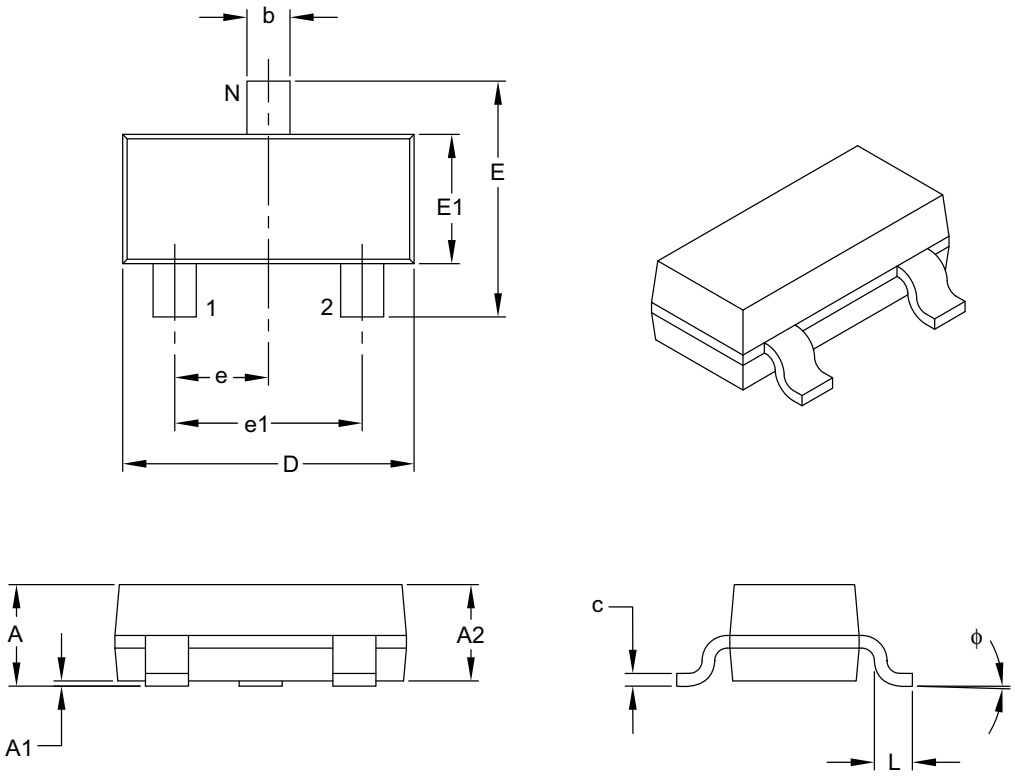

Units		MILLIMETERS		
Dimension Limits		MIN	NOM	MAX
Number of Pins	N	3		
Lead Pitch	e	0.95 BSC		
Outside Lead Pitch	e1	1.90 BSC		
Overall Height	A	0.89	–	1.12
Molded Package Thickness	A2	0.79	0.95	1.02
Standoff	A1	0.01	–	0.10
Overall Width	E	2.10	–	2.64
Molded Package Width	E1	1.16	1.30	1.40
Overall Length	D	2.67	2.90	3.05
Foot Length	L	0.13	0.50	0.60
Foot Angle	ϕ	0°	–	10°
Lead Thickness	c	0.08	–	0.20
Lead Width	b	0.30	–	0.54

Notes:

1. Dimensions D and E1 do not include mold flash or protrusions. Mold flash or protrusions shall not exceed 0.25 mm per side.
2. Dimensioning and tolerancing per ASME Y14.5M.

   BSC: Basic Dimension. Theoretically exact value shown without tolerances.

Microchip Technology Drawing C04-104B

APPENDIX A: REVISION HISTORY

Revision A (12/08)

Original release of this document.

 © 2008 Microchip Technology Inc.

THE MICROCHIP WEB SITE

Microchip provides online support via our WWW site at www.microchip.com. This web site is used as a means to make files and information easily available to customers. Accessible by using your favorite Internet browser, the web site contains the following information:

- **Product Support** – Data sheets and errata, application notes and sample programs, design resources, user's guides and hardware support documents, latest software releases and archived software
- **General Technical Support** – Frequently Asked Questions (FAQ), technical support requests, online discussion groups, Microchip consultant program member listing
- **Business of Microchip** – Product selector and ordering guides, latest Microchip press releases, listing of seminars and events, listings of Microchip sales offices, distributors and factory representatives

CUSTOMER CHANGE NOTIFICATION SERVICE

Microchip's customer notification service helps keep customers current on Microchip products. Subscribers will receive e-mail notification whenever there are changes, updates, revisions or errata related to a specified product family or development tool of interest.

To register, access the Microchip web site at www.microchip.com, click on Customer Change Notification and follow the registration instructions.

CUSTOMER SUPPORT

Users of Microchip products can receive assistance through several channels:

- Distributor or Representative
- Local Sales Office
- Field Application Engineer (FAE)
- Technical Support
- Development Systems Information Line

Customers should contact their distributor, representative or field application engineer (FAE) for support. Local sales offices are also available to help customers. A listing of sales offices and locations is included in the back of this document.

Technical support is available through the web site at: http://support.microchip.com

READER RESPONSE

It is our intention to provide you with the best documentation possible to ensure successful use of your Microchip product. If you wish to provide your comments on organization, clarity, subject matter, and ways in which our documentation can better serve you, please FAX your comments to the Technical Publications Manager at (480) 792-4150.

Please list the following information, and use this outline to provide us with your comments about this document.

To: Technical Publications Manager Total Pages Sent _____

RE: Reader Response

From: Name _____

Company _____

Address _____

City / State / ZIP / Country _____

Telephone: (_____) _____ - _____ FAX: (_____) _____ - _____

Application (optional):

Would you like a reply?___Y ___N

Device: 11AA02E48 Literature Number: DS22122A

Questions:

1. What are the best features of this document?

_____

_____

2. How does this document meet your hardware and software development needs?

_____

_____

3. Do you find the organization of this document easy to follow? If not, why?

_____

_____

4. What additions to the document do you think would enhance the structure and subject?

_____

_____

5. What deletions from the document could be made without affecting the overall usefulness?

_____

_____

6. Is there any incorrect or misleading information (what and where)?

_____

_____

7. How would you improve this document?

_____

_____

 © 2008 Microchip Technology Inc.

PRODUCT IDENTIFICATION SYSTEM

To order or obtain information, e.g., on pricing or delivery, refer to the factory or the listed sales office.

PART NO.	X	—	X	/XX
Device	Tape & Reel		Temperature Range	Package

Device:	11AA02E48	=	2 Kbit, 1.8V UNI/O Serial EEPROM with EUI-48™ Node Identity
Tape & Reel:	T	=	Tape and Reel
	Blank	=	Tube
Temperature Range:	I	=	-40°C to+85°C(Industrial)
Package:	SN	=	8-lead Plastic SOIC (3.90 mm body)
	TT	=	3-lead SOT 23 (Tape and Reel only)

Examples:

a) 11AA02E48T-I/TT = 2 Kbit, 1.8V Serial EEPROM, Industrial temp., Tape & Reel, SOT-23 package

b) 11AA02E48-I/SN = 2 Kbit, 1.8V Serial EEPROM, Industrial temp., SOIC package

c) 11AA02E48T-I/SN = 2 Kbit, 1.8V Serial EEPROM, Industrial temp., Tape & Reel, SOIC package

NOTES:

 © 2008 Microchip Technology Inc.

Note the following details of the code protection feature on Microchip devices:

- Microchip products meet the specification contained in their particular Microchip Data Sheet.
- Microchip believes that its family of products is one of the most secure families of its kind on the market today, when used in the intended manner and under normal conditions.
- There are dishonest and possibly illegal methods used to breach the code protection feature. All of these methods, to our knowledge, require using the Microchip products in a manner outside the operating specifications contained in Microchip's Data Sheets. Most likely, the person doing so is engaged in theft of intellectual property.
- Microchip is willing to work with the customer who is concerned about the integrity of their code.
- Neither Microchip nor any other semiconductor manufacturer can guarantee the security of their code. Code protection does not mean that we are guaranteeing the product as "unbreakable."

Code protection is constantly evolving. We at Microchip are committed to continuously improving the code protection features of our products. Attempts to break Microchip's code protection feature may be a violation of the Digital Millennium Copyright Act. If such acts allow unauthorized access to your software or other copyrighted work, you may have a right to sue for relief under that Act.

Information contained in this publication regarding device applications and the like is provided only for your convenience and may be superseded by updates. It is your responsibility to ensure that your application meets with your specifications. MICROCHIP MAKES NO REPRESENTATIONS OR WARRANTIES OF ANY KIND WHETHER EXPRESS OR IMPLIED, WRITTEN OR ORAL, STATUTORY OR OTHERWISE, RELATED TO THE INFORMATION, INCLUDING BUT NOT LIMITED TO ITS CONDITION, QUALITY, PERFORMANCE, MERCHANTABILITY OR FITNESS FOR PURPOSE**.** Microchip disclaims all liability arising from this information and its use. Use of Microchip devices in life support and/or safety applications is entirely at the buyer's risk, and the buyer agrees to defend, indemnify and hold harmless Microchip from any and all damages, claims, suits, or expenses resulting from such use. No licenses are conveyed, implicitly or otherwise, under any Microchip intellectual property rights.

Trademarks

The Microchip name and logo, the Microchip logo, Accuron, dsPIC, KEELOQ, KEELOQ logo, MPLAB, PIC, PICmicro, PICSTART, rfPIC, SmartShunt and UNI/O are registered trademarks of Microchip Technology Incorporated in the U.S.A. and other countries.

FilterLab, Linear Active Thermistor, MXDEV, MXLAB, SEEVAL, SmartSensor and The Embedded Control Solutions Company are registered trademarks of Microchip Technology Incorporated in the U.S.A.

Analog-for-the-Digital Age, Application Maestro, CodeGuard, dsPICDEM, dsPICDEM.net, dsPICworks, dsSPEAK, ECAN, ECONOMONITOR, FanSense, In-Circuit Serial Programming, ICSP, ICEPIC, Mindi, MiWi, MPASM, MPLAB Certified logo, MPLIB, MPLINK, mTouch, PICkit, PICDEM, PICDEM.net, PICtail, PIC^{32} logo, PowerCal, PowerInfo, PowerMate, PowerTool, REAL ICE, rfLAB, Select Mode, Total Endurance, WiperLock and ZENA are trademarks of Microchip Technology Incorporated in the U.S.A. and other countries.

SQTP is a service mark of Microchip Technology Incorporated in the U.S.A.

All other trademarks mentioned herein are property of their respective companies.

© 2008, Microchip Technology Incorporated, Printed in the U.S.A., All Rights Reserved.

Printed on recycled paper.

QUALITY MANAGEMENT SYSTEM
CERTIFIED BY DNV
ISO/TS 16949:2002

Microchip received ISO/TS-16949:2002 certification for its worldwide headquarters, design and wafer fabrication facilities in Chandler and Tempe, Arizona; Gresham, Oregon and design centers in California and India. The Company's quality system processes and procedures are for its PIC® MCUs and dsPIC® DSCs, KEELOQ® code hopping devices, Serial EEPROMs, microperipherals, nonvolatile memory and analog products. In addition, Microchip's quality system for the design and manufacture of development systems is ISO 9001:2000 certified.

WORLDWIDE SALES AND SERVICE

AMERICAS

Corporate Office
2355 West Chandler Blvd.
Chandler, AZ 85224-6199
Tel: 480-792-7200
Fax: 480-792-7277
Technical Support:
http://support.microchip.com
Web Address:
www.microchip.com

Atlanta
Duluth, GA
Tel: 678-957-9614
Fax: 678-957-1455

Boston
Westborough, MA
Tel: 774-760-0087
Fax: 774-760-0088

Chicago
Itasca, IL
Tel: 630-285-0071
Fax: 630-285-0075

Dallas
Addison, TX
Tel: 972-818-7423
Fax: 972-818-2924

Detroit
Farmington Hills, MI
Tel: 248-538-2250
Fax: 248-538-2260

Kokomo
Kokomo, IN
Tel: 765-864-8360
Fax: 765-864-8387

Los Angeles
Mission Viejo, CA
Tel: 949-462-9523
Fax: 949-462-9608

Santa Clara
Santa Clara, CA
Tel: 408-961-6444
Fax: 408-961-6445

Toronto
Mississauga, Ontario,
Canada
Tel: 905-673-0699
Fax: 905-673-6509

ASIA/PACIFIC

Asia Pacific Office
Suites 3707-14, 37th Floor
Tower 6, The Gateway
Harbour City, Kowloon
Hong Kong
Tel: 852-2401-1200
Fax: 852-2401-3431

Australia - Sydney
Tel: 61-2-9868-6733
Fax: 61-2-9868-6755

China - Beijing
Tel: 86-10-8528-2100
Fax: 86-10-8528-2104

China - Chengdu
Tel: 86-28-8665-5511
Fax: 86-28-8665-7889

China - Hong Kong SAR
Tel: 852-2401-1200
Fax: 852-2401-3431

China - Nanjing
Tel: 86-25-8473-2460
Fax: 86-25-8473-2470

China - Qingdao
Tel: 86-532-8502-7355
Fax: 86-532-8502-7205

China - Shanghai
Tel: 86-21-5407-5533
Fax: 86-21-5407-5066

China - Shenyang
Tel: 86-24-2334-2829
Fax: 86-24-2334-2393

China - Shenzhen
Tel: 86-755-8203-2660
Fax: 86-755-8203-1760

China - Wuhan
Tel: 86-27-5980-5300
Fax: 86-27-5980-5118

China - Xiamen
Tel: 86-592-2388138
Fax: 86-592-2388130

China - Xian
Tel: 86-29-8833-7252
Fax: 86-29-8833-7256

China - Zhuhai
Tel: 86-756-3210040
Fax: 86-756-3210049

ASIA/PACIFIC

India - Bangalore
Tel: 91-80-4182-8400
Fax: 91-80-4182-8422

India - New Delhi
Tel: 91-11-4160-8631
Fax: 91-11-4160-8632

India - Pune
Tel: 91-20-2566-1512
Fax: 91-20-2566-1513

Japan - Yokohama
Tel: 81-45-471- 6166
Fax: 81-45-471-6122

Korea - Daegu
Tel: 82-53-744-4301
Fax: 82-53-744-4302

Korea - Seoul
Tel: 82-2-554-7200
Fax: 82-2-558-5932 or
82-2-558-5934

Malaysia - Kuala Lumpur
Tel: 60-3-6201-9857
Fax: 60-3-6201-9859

Malaysia - Penang
Tel: 60-4-227-8870
Fax: 60-4-227-4068

Philippines - Manila
Tel: 63-2-634-9065
Fax: 63-2-634-9069

Singapore
Tel: 65-6334-8870
Fax: 65-6334-8850

Taiwan - Hsin Chu
Tel: 886-3-572-9526
Fax: 886-3-572-6459

Taiwan - Kaohsiung
Tel: 886-7-536-4818
Fax: 886-7-536-4803

Taiwan - Taipei
Tel: 886-2-2500-6610
Fax: 886-2-2508-0102

Thailand - Bangkok
Tel: 66-2-694-1351
Fax: 66-2-694-1350

EUROPE

Austria - Wels
Tel: 43-7242-2244-39
Fax: 43-7242-2244-393

Denmark - Copenhagen
Tel: 45-4450-2828
Fax: 45-4485-2829

France - Paris
Tel: 33-1-69-53-63-20
Fax: 33-1-69-30-90-79

Germany - Munich
Tel: 49-89-627-144-0
Fax: 49-89-627-144-44

Italy - Milan
Tel: 39-0331-742611
Fax: 39-0331-466781

Netherlands - Drunen
Tel: 31-416-690399
Fax: 31-416-690340

Spain - Madrid
Tel: 34-91-708-08-90
Fax: 34-91-708-08-91

UK - Wokingham
Tel: 44-118-921-5869
Fax: 44-118-921-5820

01/02/08

© 2008 Microchip Technology Inc.

Компания «ЭлектроПласт» предлагает заключение долгосрочных отношений при поставках импортных электронных компонентов на взаимовыгодных условиях!

Наши преимущества:

- Оперативные поставки широкого спектра электронных компонентов отечественного и импортного производства напрямую от производителей и с крупнейших мировых складов;
- Поставка более 17-ти миллионов наименований электронных компонентов;
- Поставка сложных, дефицитных, либо снятых с производства позиций;
- Оперативные сроки поставки под заказ (от 5 рабочих дней);
- Экспресс доставка в любую точку России;
- Техническая поддержка проекта, помощь в подборе аналогов, поставка прототипов;
- Система менеджмента качества сертифицирована по Международному стандарту ISO 9001;
- Лицензия ФСБ на осуществление работ с использованием сведений, составляющих государственную тайну;
- Поставка специализированных компонентов (Xilinx, Altera, Analog Devices, Intersil, Interpoint, Microsemi, Aeroflex, Peregrine, Syfer, Eurofarad, Texas Instrument, Miteq, Cobham, E2V, MA-COM, Hittite, Mini-Circuits,General Dynamics и др.);

Помимо этого, одним из направлений компании «ЭлектроПласт» является направление «Источники питания». Мы предлагаем Вам помощь Конструкторского отдела:

- Подбор оптимального решения, техническое обоснование при выборе компонента;
- Подбор аналогов;
- Консультации по применению компонента;
- Поставка образцов и прототипов;
- Техническая поддержка проекта;
- Защита от снятия компонента с производства.

Как с нами связаться

Телефон: 8 (812) 309 58 32 (многоканальный)
Факс: 8 (812) 320-02-42
Электронная почта: org@eplast1.ru
Адрес: 198099, г. Санкт-Петербург, ул. Калинина, дом 2, корпус 4, литера А.